Kia, THE COMPANY

Thank you for becoming the owner of a new Kia vehicle.

As a global car manufacturer focused on building high-quality, value for money prices, Kia Motors is dedicated to providing you with a customer service experience that exceeds your expectations.

At all of our Kia dealerships you will be treated with warmth, hospitality and professionalism by people who care based on our **"Family-like Care"** promise.

All information contained in this Owner's Manual is accurate at the time of publication. However, Kia reserves the right to make changes at any time so that our policy of continual product improvement can be carried out.

This manual applies to all models of this vehicle and includes descriptions and explanations of optional as well as standard equipment. As a result, you may encounter material in this manual that is not applicable to your specific Kia vehicle.

Enjoy your vehicle and Kia's "Family-like Care" experience!

FOREWORD

Thank you for choosing a Kia vehicle.

This manual will familiarize you with operational, maintenance and safety information about your new vehicle. It is supplemented by a Warranty and Maintenance book that provides important information on all warranties regarding your vehicle. Kia urges you to read these publications carefully and follow the recommendations to help assure enjoyable and safe operation of your new vehicle.

Kia offers a great variety of options, components and features for its various models. Therefore, some of the equipment described in this manual, along with the various illustrations, may not be applicable to your particular vehicle.

The information and specifications provided in this manual were accurate at the time of printing. Kia reserves the right to discontinue or change specifications or design at any time without notice and without incurring any obligation. If you have questions, always check with your authorized Kia dealer.

Kia assures you of our continuing interest in your motoring pleasure and satisfaction in your Kia vehicle.

© 2017 Kia MOTORS Corp.

All rights reserved. Reproduction by any means, electronic or mechanical, including photocopying, recording, or by any information storage and retrieval system or translation in whole or part is not permitted without written authorization from Kia MOTORS Corporation.

TABLE OF CONTENTS

Introduction	1
Your vehicle at a glance	2
Safety features of your vehicle	3
Features of your vehicle	4
Audio system	5
Driving your vehicle	6
What to do in an emergency	7
Maintenance	8
Specifications & Consumer information	9
Appendix	10
Index	I

Hybrid System Overview

HEV (HYBRID ELECTRIC VEHICLE) SYSTEM / H2
NIRO HYBRID ENERGY FLOW / H3
STARTING THE HYBRID VEHICLE (SMART KEY) / H5
THE COMPONENTS OF HYBRID VEHICLE / H6

HEV (HYBRID ELECTRIC VEHICLE) SYSTEM

The Kia Hybrid Electric Vehicle (HEV) uses both the gasoline engine and the electric motor for power. The electric motor is run by a 240V high-voltage HEV battery.

Depending on the driving conditions, the HEV computer selectively operates between the engine and the electric motor or even both at the same time.

Fuel efficiency increases when the engine is at idle, or when the vehicle is driven by the electric motor with the HEV battery.

The HEV battery charge must be maintained for the times when the engine acts as a generator, such as when stopped at idle. Charging also occurs when decelerating or by regenerative braking.

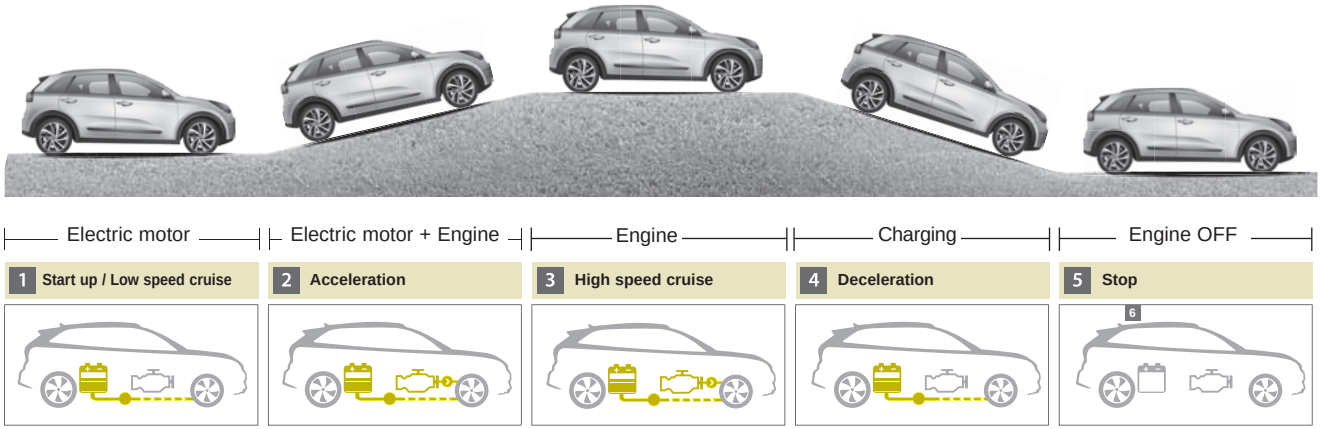

ODE056001

NIRO HYBRID ENERGY FLOW

Kia hybrid system notifies the drivers of energy flow in various operating modes. Eleven Modes show drivers the current operating condition.

EV Propulsion

ODE046121L

Electric power is used to move the vehicle.

(Battery ➞ Wheel)

Engine Only Propulsion

ODE046123L

Engine power is used to move the vehicle.

(Engine ➞ Wheel)

Vehicle Stop

ODE046120L

The mode means the vehicle at stop. (There is no energy flow.)

Power Assist

ODE046122L

Electric and Engine power are used to move the vehicle.

(Battery & Engine ➞ Wheel)

Engine Generation

ODE046124L

Vehicle is stopped with the Engine charging the hybrid battery.

(Engine ➞ Battery)

Regeneration

ODE046121L

Hybrid battery is being charged by regenerative braking.

(Wheel ➞ Battery)

Engine Brake

ODE046126L

The vehicle is being slowed by engine compression.

(Wheel ➞ Engine)

Power Reserve

ODE046127L

Engine is both driving the vehicle and charging the hybrid battery.

(Engine ➞ Wheel & Battery)

Engine Generation/Motor Drive

ODE046128L

The vehicle is being slowed by engine compression and regenerative braking. The hybrid battery is being charged by regenerative braking.

(Engine ➞ Battery ➞ Wheel)

Engine Generation/Regeneration

ODE046128L

The engine and regenerative braking system charge the hybrid battery driving deceleration.

(Engine & Wheel ➞ Battery)

Engine Brake/Regeneration

ODE046122L

The engine compression can be used to slow the vehicle. The regenerative braking system can be used to charge the hybrid system.

(Wheel ➞ Engine & Battery)

Starting the Hybrid System

1. Carry the smart key into the vehicle.
2. Make sure the parking brake is firmly applied.
3. Place the shift lever in the P(Park) position.

   In N (neutral) position, you can not start the vehicle.
4. Depress the brake pedal.
5. Press the engine start/stop button or turn the ignition switch to the ON position.
6. The engine should be started without pressing the accelerator. In extremely cold weather or after the vehicle has not been operated for several days, let the engine warm up without depressing the accelerator.
   - Even if the smart key is in the vehicle, if it is far away from you, the engine may not start.
   - When the engine start/stop button is in the ACC or ON position or turn the ignition switch to the ACC or ON position. If any door is open, the system checks for the smart key. If the smart key is not in the vehicle, the warning, "Key is not in vehicle" will come on, and if all doors are closed, the chime will also sound for about 5 seconds. The indicator will turn off while the vehicle is moving. Keep the smart key in the vehicle when using the ACC position or if the vehicle engine is on.

If the starting procedure is followed, the "READY" symbol on the instrument cluster will turn on. For more details, Please check chapter 6.

ECONOMICAL and SAFE OPERATION of Hybrid system

- Drive smoothly. Accelerate at a moderate rate and maintain a steady cruising speed. Don't make "jack-rabbit" starts. Don't race between stoplights. Avoid heavy traffic whenever possible. Always maintain a safe distance from other vehicles so you can avoid unnecessary braking. This also reduces brake wear.
- The regenerative brake generates energy when the vehicle decelerates.
- When the hybrid battery power is low, the hybrid system automatically recharges the hybrid battery.
- When the engine runs in "N" position, the hybrid system cannot generate electricity. The hybrid battery cannot recharge in "N" position. Please refer to chapter 6.

✻ NOTICE

When the hybrid system is in READY mode, the engine will automatically start and stop as needed. The "READY" symbol will illuminate in the cluster when the system is operational.

THE COMPONENTS OF HYBRID VEHICLE

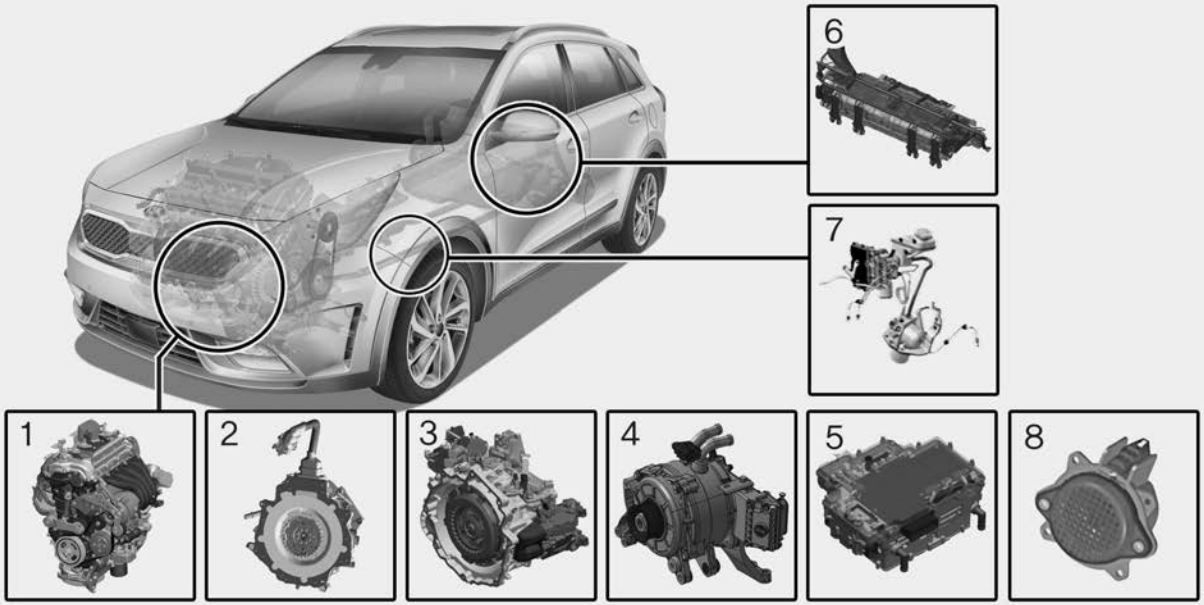

1. Engine : 1.6L
2. Motor : 32kW
3. Transmission : 6DCT
4. Hybrid starter generator (HSG)
5. HPCU (Hybrid Power Control Unit)
6. High voltage battery system
7. Generative brake system
8. Virtual Engine Sound System (VESS)

❊ The actual shape may differ from the illustration.

ODEQ016001L

The Hybrid battery uses high voltage top operate the electric motor and other components and other components. High voltage is dangerous if touched.

Your vehicle is equipped with orange colored insulation and covers over the high voltage components to protect people from electric shock. High voltage warning labels are attached to some system components as additional warnings. Your vehicle is recommended to be serviced by an authorized Kia dealer.

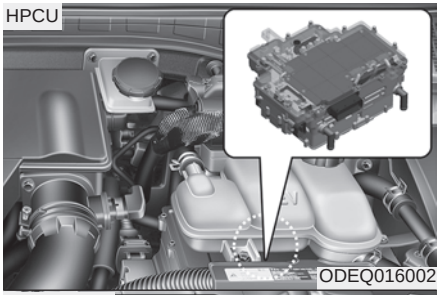

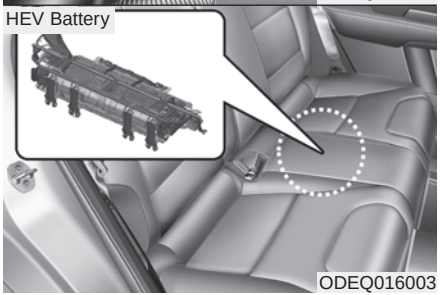

⚠ WARNING

Never touch orange or high voltage labeled components including wires, cables, and connections. If the insulators or covers are damaged or removed, severe injury or death from electrocution may occur.

⚠ WARNING

When replacing the fuses in the engine compartment, never touch the HPCU. The HPCU carries high voltage. Touching the HPCU could result in electrocution, serious injury, or death.

⚠ CAUTION

- ***Do not apply strong force nor pile up any items above the rear seat. Such an attempt may distort the high voltage battery case, causing a safety problem or degrading the performance.***
- ***Be careful when loading inflammable liquid in rear seat. It could cause operational and safety degradation if the liquid leaks and flows in high voltage battery.***

(Continued)

(Continued)

- *Prolonged exposure of high voltage battery to high temperature may lead to decrease in battery performance.*

  Therefore, the heat treatment duration for vehicle paint work should not exceed 30 minutes in 70°C and 20 minutes in 80°C.
- *When cleaning the inside of the engine room, high pressure washing and applying water directly can both cause short circuit of the high voltage. This may lead to electric shock.*

  Also, the vehicle parts, especially electronic, can be damaged and result in vehicle malfunction. Always use caution when cleaning the inside of the engine room.

Motor

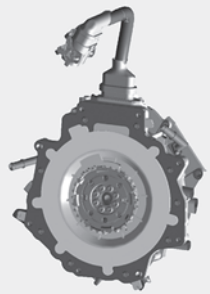

ODEQ016004

⚠ WARNING

As with all batteries, avoid fluid contact with the Hybrid battery. If the battery is damaged and if electrolyte comes in contact with your body, clothes or eyes, immediately flush with a large quantity of fresh water.

⚠ WARNING

Do not use an after-market battery charger to charge the Hybrid battery. Doing so may result in death or serious injury.

⚠ WARNING - High Waters

- **Avoid high waters as this may result in your vehicle becoming saturated with water and could compromise the high voltage components.**
- **Do not touch the any of the high voltage components within your vehicle if your vehicle has been submerged in water equal to half of the vehicle height. Touching high voltage components once submerged in water could result in severe burns or electric shock that could result in death or serious injury.**

⚠ WARNING - Carrying Liquids in rear seat

Do not load large amounts of water in open containers into the vehicle. If the water spills onto the HEV battery, it may cause a short and damage the battery.

⚠ CAUTION - Cleaning Engine

When you clean the engine compartment, do not wash using water. Water may cause electric arcing to occur and damage electronic parts and components.

⚠ WARNING - Exposure to High Voltage

- **High voltage in the hybrid battery system is very dangerous and can cause severe burns and electric shock. This may result in serious injury or death.**
- **For your safety, never touch, replace, dismantle or remove any portion of the hybrid battery system including components, cables and connectors.**

⚠ WARNING - Use of Water or Liquids

If water or liquids come into contact with the hybrid system components, and you are also in contact with the water, severe injury or death due to electrocution may occur.

⚠ WARNING - Hot Components

When the hybrid battery system operates, the HEV battery system can be hot. Heat burns may result from touching even insulated components of the HEV system.

⚠ CAUTION - Prolonged parking

Prolonged parking might cause battery discharge and operation failure due to natural discharge. Driving the vehicle approximately once every 2 months, more than 15 km is recommended. The battery will be charged automatically when driving the vehicle.

Safety plug

The safety plug is located underneath the rear seat.

⚠ DANGER

Never touch the safety plug under the rear seat. Safety plug is attached to high voltage hybrid battery system. Touching safety plug will result in death or serious injury. Service personnel should follow procedure in service manual.

Some Special Features of the Hybrid Vehicle.

Hybrid vehicles sound different than gasoline engine vehicles. When the hybrid system operates, you may hear a sound from the hybrid battery system behind the rear seat. If you apply the accelerator pedal rapidly, you may hear a sound. When you apply the brake pedal, you may hear a sound from the regenerative brake system. When the hybrid system is turned off or on, you may hear a sound in the engine compartment. If you depress the brake pedal repeatedly when the hybrid system is turned on, you may hear a sound in the engine compartment. None of these sounds indicate a problem.

They are characteristics of hybrid vehicles.

When the hybrid system is turned on, the engine may run. This does not indicate a malfunction. If the "READY" symbol is on, the hybrid system is operating. Even if the gasoline engine is off, you can operate the vehicle.

The HEV system may emit electromagnetic waves which can affect the performance of electronic devices appliances, such as laptop computers, which are not part of the vehicle design.

If you park the vehicle for a long time, the hybrid system will discharge. You need to drive the vehicle several times per month to maintain a charge.

When you start the hybrid system in the "P" transmission position, the "READY" symbol is illuminated in the cluster. The driver can drive the vehicle even if the engine is stopped.

⚠ WARNING

When you leave the vehicle, you should turn off the hybrid system. If you depress the accelerator pedal by mistake and the vehicle is not in the "P" position, the vehicle will accelerate. This may result in serious injury or death.

Virtual Engine Sound System (VESS)

The Virtual Engine Sound System generates an engine sound for pedestrians to hear vehicle while at low speeds in EV mode.

Hybrid battery air intake

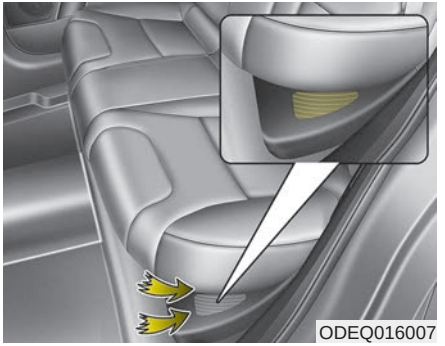

The hybrid battery air intake is located on bottom the rear seats. The air intake cools down the hybrid battery. When the hybrid battery air intake is blocked, the hybrid battery may be overheated. Do not obstruct the air intake with any other objects.

⚠ WARNING - Air Intake

- **Blocking the air intake behind the rear seats may damage the HEV battery.**
- **Do not allow any water into the air intake even when cleaning. If any water enters the air intake, the Hybrid battery may cause an electric shock which can cause serious injury or death due to electrocution.**

If An Accident Occurs

- Avoid the engine compartment.
- Avoid any orange or high voltage wires, cables, or components.
- Assume that a high voltage component is exposed and move away from the vehicle as promptly as possible.
- Refer to Chapter 7 for towing information.

⚠ WARNING

- **After parking the vehicle, shift the transmission into "P" position. Turn off the hybrid system by pushing the Engine Start/Stop button.**
- **For your safety, do not touch high voltage cables, connectors and package modules. High Voltage components are orange in color.**
- **Exposed cables or wires may be visible inside or outside of the vehicle. Never touch the wires or cables, because an electrical shock may occur causing injury or death.**

(Continued)

(Continued)

- **If a small scale fire occurs, use a fire extinguisher (ABC, BC) that is meant for electrical fires.**

  If it is impossible to extinguish the fire in the early stage, remain a safe distance from the vehicle and immediately call your local fire emergency responders. Also, advise them that a hybrid vehicle is involved.

  If the fire spreads to the high voltage battery, large amount of water is needed to put out the fire.

  Using small amount of water or fire extinguishers not meant for electrical fires could cause serious injury or death from electrical shocks.
- **If you need towing, refer to chapter 7.**

⚠ WARNING

If a vehicle accident occurs:

1. **Stop the vehicle and shift the transmission into "P" position.**

   And then depress the parking brake.
2. **Turn off the Hybrid system by pushing the Engine Start/Stop Button.**
3. **Evacuate to the safety place.**
4. **Call emergency services for help and let them know the vehicle is a Hybrid vehicle.**

Do not touch high voltage cables, connectors and package modules. High voltage components are orange in color.

Exposed cables or wires may be visible inside or outside of the vehicle. Never touch the wires or cables, because an electrical shock may occur causing injury or death.

⚠ WARNING

If a submersion in water occurs:

If your vehicle was flooded and has soaked carpeting or water on the flooring, you should not try to start the Hybrid system. Never touch the high voltage cables, connectors and package modules, because an electrical shock may occur causing injury or death. High Voltage cables are orange in color.

We recommend that the car towed to an authorized Kia dealer.

When the hybrid vehicle shuts off

When the high voltage battery or 12-volt battery discharges, or fuel tank is empty, the hybrid system may not operate.

If the Hybrid system stops operating while the vehicle is moving, reduce the vehicle speed gradually. Pull your vehicle off the road in a safe area, and shift the transmission in to Park (P) position and;

1. Turn on the hazard warning flashers.
2. Set the start button at OFF, and try to start the Hybrid system by applying the brake pedal and pushing the start button.
3. If the Hybrid system will not operate, refer to "EMERGENCY STARTING" in chapter 7.

Before you try to jump start the vehicle, confirm the fuel level. If the fuel level is low add more fuel before attempting as emergency start.

⚠ WARNING - Accident Vehicle

Never touch electric wires or cable. If exposed electric wires or cables are visible inside or outside of your vehicle, an electric shock may occur.

⚠ WARNING - Putting out fire

Never use a small quantity of water to put out a fire in your vehicle. If a fire occurs, evacuate the car immediately and contact the fire department.

Introduction

1

How to use this manual 1-2
Fuel requirements 1-3
• Gasoline engine 1-3
Vehicle handling instructions 1-6
Vehicle break-in process 1-6
HEV powertrain 1-6

HOW TO USE THIS MANUAL

We want to help you get the greatest possible driving pleasure from your vehicle. Your Owner's Manual can assist you in many ways. We strongly recommend that you read the entire manual. In order to minimize the chance of death or injury, you must read the WARNING and CAUTION sections in the manual.

Illustrations complement the words in this manual to best explain how to enjoy your vehicle. By reading your manual, you learn about features, important safety information, and driving tips under various road conditions.

The general layout of the manual is provided in the Table of Contents. Use the index when looking for a specific area or subject, it has an alphabetical listing of all information in your manual.

Chapters: This manual has nine chapters plus an index. Each chapter begins with a brief list of contents so you can tell at a glance if that chapter has the information you want.

You will find various WARNINGs, CAUTIONs, and NOTICEs in this manual. These WARNINGs were prepared to enhance your personal safety. You should carefully read and follow ALL procedures and recommendations provided in these WARNINGs, CAUTIONs and NOTICEs.

⚠ WARNING

A WARNING indicates a situation in which harm, serious bodily injury or death could result if the warning is ignored.

⚠ CAUTION

A CAUTION indicates a situation in which damage to your vehicle could result if the caution is ignored.

✻ NOTICE

A NOTICE indicates interesting or helpful information is being provided.

FUEL REQUIREMENTS

Gasoline engine

Unleaded

For Europe

For the optimal vehicle performance, we recommend you to use unleaded gasoline with an octane rating of RON (Research Octane Number) 95 / AKI (Anti Knock Index) 91 or higher.

You may use unleaded gasoline with an octane rating of RON 91~94 / AKI 87~90 but it may result in slight performance reduction of the vehicle. (Do not use methanol blended fuels.)

Except Europe

Your new Kia vehicle is designed to use only unleaded fuel having an Octane Rating of RON (Research Octane Number) 91 / AKI (Anti-Knock Index) 87 or higher. (Do not use methanol blended fuels.)

Your new vehicle is designed to obtain maximum performance with UNLEADED FUEL, as well as minimize exhaust emissions and spark plug fouling.

⚠ CAUTION

NEVER USE LEADED FUEL. The use of leaded fuel is detrimental to the catalytic converter and will damage the engine control system's oxygen sensor and affect emission control.

Never add any fuel system cleaning agents to the fuel tank other than what has been specified. (We recommend that you consult an authorized Kia dealer for details.)

⚠ WARNING

- **Do not "top off" after the nozzle automatically shuts off when refueling.**
- **Always check that the fuel cap is installed securely to prevent fuel spillage in the event of an accident.**

Leaded (if equipped)

For some countries, your vehicle is designed to use leaded gasoline. When you are going to use leaded gasoline, we recommend that you ask an authorized Kia dealer whether leaded gasoline in your vehicle is available or not.

Octane Rating of leaded gasoline is same with unleaded one.

Gasoline containing alcohol and methanol

Gasohol, a mixture of gasoline and ethanol (also known as grain alcohol), and gasoline or gasohol containing methanol (also known as wood alcohol) are being marketed along with or instead of leaded or unleaded gasoline.

Do not use gasohol containing more than 10% ethanol, and do not use gasoline or gasohol containing any methanol. Either of these fuels may cause drivability problems and damage to the fuel system, engine control system and emission control system.

Discontinue using gasohol of any kind if drivability problems occur.

Vehicle damage or drivability problems may not be covered by the manufacturer's warranty if they result from the use of:

1. Gasohol containing more than 10% ethanol.
2. Gasoline or gasohol containing methanol.
3. Leaded fuel or leaded gasohol.

⚠ CAUTION

Never use gasohol which contains methanol. Discontinue use of any gasohol product which impairs drivability.

Other fuels

Using fuels such as

- Silicone (Si) contained fuel,
- MMT (Manganese, Mn) contained fuel,
- Ferrocene (Fe) contained fuel, and
- Other metalic additives contained fuels, may cause vehicle and engine damage or cause plugging, misfiring, poor acceleration, engine stalling, catalyst melting, abnormal corrosion, life cycle reduction, etc.

  Also, the Malfunction Indicator Lamp (MIL) may illuminate.

✻ NOTICE

Damage to the fuel system or performance problem caused by the use of these fuels may not be covered by your New Vehicle Limited Warranty.

Use of MTBE

Kia recommends avoiding fuels containing MTBE (Methyl Tertiary Butyl Ether) over 15.0% vol. (Oxygen Content 2.7% weight) in your vehicle.

Fuel containing MTBE over 15.0% vol. (Oxygen Content 2.7% weight) may reduce vehicle performance and produce vapor lock or hard starting.

⚠ CAUTION

Your New Vehicle Limited Warranty may not cover damage to the fuel system and any performance problems that are caused by the use of fuels containing methanol or fuels containing MTBE (Methyl Tertiary Butyl Ether) over 15.0% vol. (Oxygen Content 2.7% weight.)

Do not use methanol

Fuels containing methanol (wood alcohol) should not be used in your vehicle. This type of fuel can reduce vehicle performance and damage components of the fuel system, engine control system and emission control system.

Fuel Additives

Kia recommends that you use unleaded gasoline which has an octane rating of RON (Research Octane Number) 95 / AKI (Anti Knock Index) 91 or higher (for Europe) or Octane Rating of RON (Reasearch Octane Number) 91 / AKI (Anti-Knock Index) 87 or higher (except Europe).

For customers who do not use good quality gasolines including fuel additives regularly, and have problems starting or the engine does not run smoothly, one bottle of additives added to the fuel tank at every 15,000km (For Europe)/ 10,000km (Except Europe). Additives are available from your authorized Kia dealer along with information on how to use them. Do not mix other additives.

Operation in foreign countries

If you are going to drive your vehicle in another country, be sure to:

- Observe all regulations regarding registration and insurance.
- Determine that acceptable fuel is available.

VEHICLE HANDLING INSTRUCTIONS

As with other vehicles of this type, failure to operate this vehicle correctly may result in loss of control, an accident or vehicle rollover.

Specific design characteristics (higher ground clearance, track, etc.) give this vehicle a higher center of gravity than other types of vehicles. In other words they are not designed for cornering at the same speeds as conventional 2-wheel drive vehicles. Avoid sharp turns or abrupt maneuvers. Again, failure to operate this vehicle correctly may result in loss of control, an accident or vehicle rollover. **Be sure to read the "Reducing the risk of a rollover" driving guidelines, in chapter 6 of this manual.**

VEHICLE BREAK-IN PROCESS

No special break-in period is needed. By following a few simple precautions for the first 1,000 km (600 miles) you may add to the performance, economy and life of your vehicle.

- Do not race the engine.
- While driving, keep your engine speed (rpm, or revolutions per minute) within 3,000 rpm.
- Do not maintain a single speed for long periods of time, either fast or slow. Varying engine speed is needed to properly break-in the engine.
- Avoid hard stops, except in emergencies, to allow the brakes to seat properly.
- Don't tow a trailer during the first 2,000 km (1,200 miles) of operation.

HEV POWERTRAIN

By following a few simple precautions for the first 1,000 km (600 miles) you may add to the performance, economy and life of your vehicle.

- Do not race the engine.
- Avoid hard stops, except in emergencies, to allow the brakes to seat properly.

Your vehicle at a glance

Exterior overview 2-2
Interior overview 2-4
Instrument panel overview 2-5
Engine compartment 2-6

EXTERIOR OVERVIEW

■ Front view

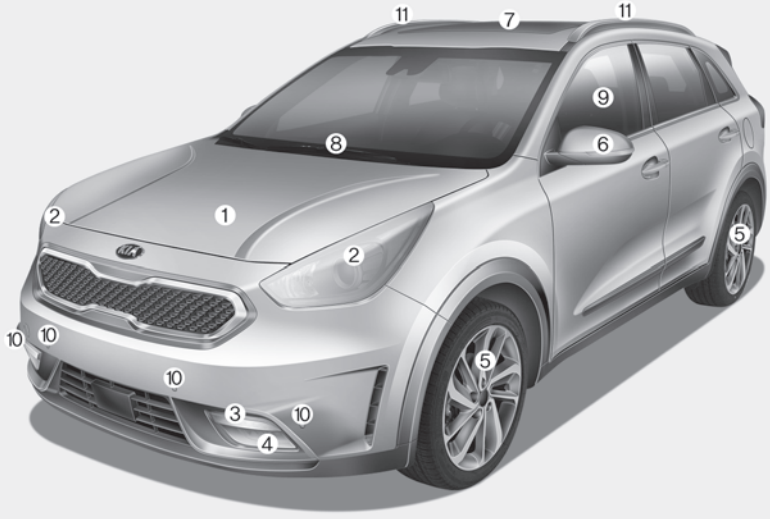

1. Hood 4-28
2. Head lamp (Features of your vehicle) 4-98
   Head lamp (Maintenance).....8-85
3. Day time running light (D.R.L) 4-98
4. Fog lamp 4-102, 8-87
5. Wheel and tire.....8-50, 9-5, 9-6
6. Outside rearview mirror.....4-42
7. Sunroof.....4-33
8. Front windshield wiper blades
   (Features of your vehicle).....4-104
   Front windshield wiper blades
   (Maintenance) 8-42
9. Windows 4-22
10. Parking assist system 4-91
11. Roof rack.....4-149

❊ The actual shape may differ from the illustration.

ODE016001

■ Rear view

1. Door locks 4-15
2. Fuel filler lid 4-30
3. Rear combination lamp (Maintenance) 8-83
4. High mounted stop lamp (Maintenance) 8-90
5. Tailgate 4-19
6. Antenna 5-2
7. Rear wiper and Rearview camera 4-108, 4-96
8. Parking assist system (Rear).....4-87, 4-91

❈ The actual shape may differ from the illustration.

ODE016002

INTERIOR OVERVIEW

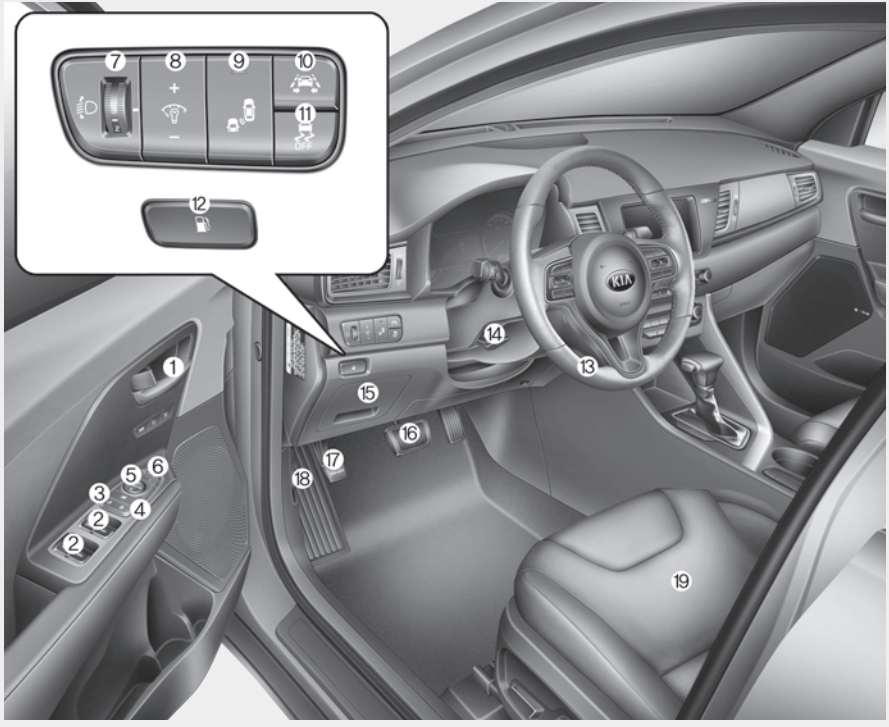

1. Inside door handle.....4-16
2. Power window switch 4-23
3. Central door lock switch 4-17
4. Power window lock button 4-26
5. Outside rearview mirror control.....4-43
6. Outside rearview mirror folding 4-44
7. Headlight leveling device.....4-103
8. Instrument panel illumination control 4-47
9. BSD On/Off button 6-82
10. LKAS On/Off button 6-73
11. ESC Off button 6-30
12. Fuel filler lid open button.....4-30
13. Steering wheel 4-38
14. Tilt and telescopic steering control lever 4-39
15. Inner fuse panel 8-68
16. Brake pedal 6-24
17. Parking brake pedal 6-25, 8-37
18. Hood release lever 4-28
19. Seat 3-2

❊ The actual shape may differ from the illustration.

ODE016003L

INSTRUMENT PANEL OVERVIEW

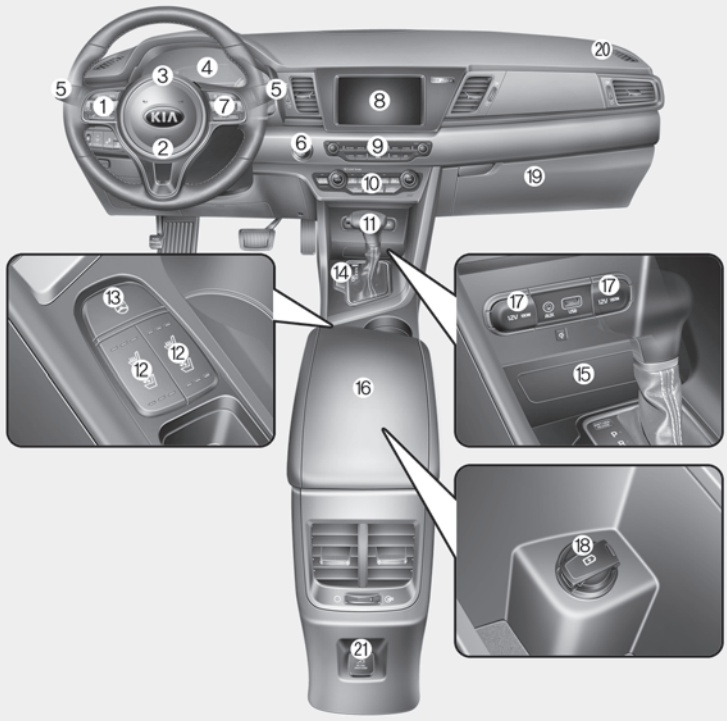

❊ The actual shape may differ from the illustration.

1. Steering wheel audio controls.....5-3
2. Driver`s front air bag 3-56
3. Horn.....4-40
4. Instrument cluster.....4-46
5. Wiper and washer control lever (Right).....4-104
   Turn signal / headlamp control lever (Left) 4-97
6. Engine start/stop button 6-9
7. Cruise control 6-49
   Smart cruise control 6-54
8. AVN (Audio/Video/Navigation).....5-8
9. Hazard warning flasher 7-2
10. Climate control system.....4-119
11. Shift lever DCT 6-15
12. Front seat warmer 4-138
    Front air ventilation seat 4-140
13. Heated steering wheel button 4-39
14. Parking assist system On/Off button...4-91
15. Smart phone wireless charger 4-143
16. Center console storage box 4-133
17. Power outlet.....4-140
18. USB charger.....4-141
19. Glove box 4-133
20. Passenger`s front air bag.....3-56
21. AC 220V inverter 4-142

ODE016004

ENGINE COMPARTMENT

■ **Gasoline Kappa 1.6GDI**

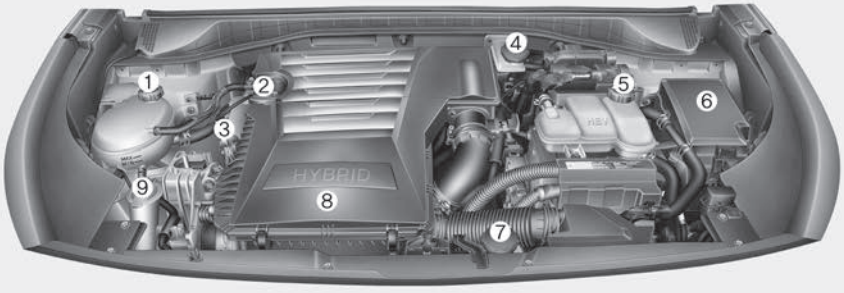

1. Engine coolant reservoir 8-28
2. Engine oil filler cap 8-26
3. Engine oil dipstick 8-26
4. Brake fluid reservoir 8-33
5. Inverter coolant reservoir 8-30
6. Fuse box 8-65
7. Engine clutch actuator reservoir tank 8-34
8. Air cleaner.....8-38
9. Windshield washer fluid reservoir 8-36

❊ The actual engine room in the vehicle may differ from the illustration.

ODE076001

Safety features of your vehicle

Seats 3-2
- Front seat adjustment - manual. 3-6
- Front seat adjustment - power. 3-7
- Headrest (for front seat) 3-8
- Seatback pocket 3-11
- Driver position memory system (for power seat). . . 3-12
- Rear seat. 3-13
- Headrest 3-16

Seat belts 3-18
- Seat belt restraint system 3-18
- Pre-tensioner seat belt. 3-26
- Seat belt precautions 3-29
- Care of seat belts 3-32

Child restraint system (CRS) 3-33
- Selecting a Child Restraint System (CRS) 3-34
- Installing a Child Restraint System (CRS). 3-36
- ISOFIX anchorage and top-tether anchorage (ISOFIX anchorage system) for children 3-37

Air bag - supplemental restraint system 3-47
- How does the air bag system operate 3-48
- Air bag warning light 3-51
- SRS components and functions 3-53
- Driver's and passenger's front air bag 3-56
- Side air bag 3-62
- Curtain air bag 3-63
- SRS Care 3-68
- Additional safety precautions. 3-69
- Air bag warning label 3-70

SEATS

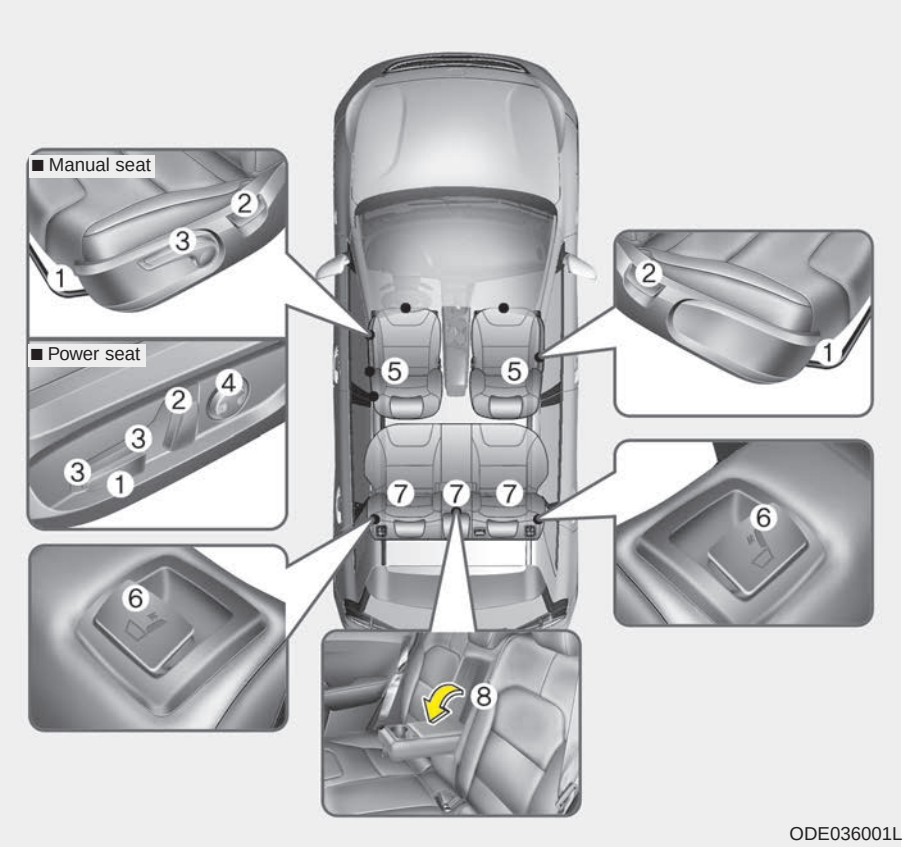

Front seat

(1) Forward and backward
(2) Seatback angle
(3) Seat cushion height (Driver`s seat)
(4) Lumbar support (Driver's seat)*
(5) Head rest

Rear seat

(6) Seatback folding
(7) Headrest
(8) Armrest*

* : if equipped

⚠ WARNING - Loose objects

Loose objects in the driver's foot area could interfere with the operation of the foot pedals, possibly causing an accident. Do not place anything under the front seats.

⚠ WARNING - Uprighting seat

When you return the seatback to its upright position, hold the seatback and return it slowly and be sure there are no other occupants around the seat. If the seatback is returned without being held and controlled, the back of the seat could spring forward resulting in accidental injury to a person struck by the seatback.

⚠ WARNING - Driver responsibility for passengers

Riding in a vehicle with the seatback reclined could lead to serious or fatal injury in an accident. If a seat is reclined during an accident, the occupant's hips may slide under the lap portion of the seat belt applying great force to the unprotected abdomen. Serious or fatal internal injuries could result. The driver must advise the passenger to keep the seatback in an upright position whenever the vehicle is in motion.

⚠ WARNING

Do not use a sitting cushion that reduces friction between the seat and passenger. The passenger's hips may slide under the lap portion of the seat belt during an accident or a sudden stop. Serious or fatal internal injuries could result because the seat belt cannot operate normally.

⚠ WARNING - Driver's seat

- Never attempt to adjust the seat while the vehicle is moving. This could result in loss of control, and an accident causing death, serious injury, or property damage.
- Do not allow anything to interfere with the normal position of the seatback. Storing items against a seatback or in any other way interfering with proper locking of a seatback could result in serious or fatal injury in a sudden stop or collision.
- Always drive and ride with your seatback upright and the lap portion of the seat belt snug and low across the hips. This is the best position to protect you in case of an accident.

(Continued)

(Continued)

- In order to avoid unnecessary and perhaps severe air bag injuries, always sit as far back as possible from the steering wheel while maintaining comfortable control of the vehicle. We recommend that your chest be at least 25 cm (10 inches) away from the steering wheel.

⚠ WARNING - Rear seatbacks

- The rear seatback must be securely latched. If not, passengers and objects could be thrown forward resulting in serious injury or death in the event of a sudden stop or collision.
- Luggage and other cargo should be laid flat in the cargo area. If objects are large, heavy, or must be piled, they must be secured.

(Continued)

(Continued)

Under no circumstances should cargo be piled higher than the seatbacks. Failure to follow these warnings could result in serious injury or death in the event of a sudden stop, collision or rollover.

- No passenger should ride in the cargo area or sit or lie on folded seatbacks while the vehicle is moving. All passengers must be properly seated in seats and restrained properly while riding.
- When resetting the seatback to the upright position, make sure it is securely latched by pushing it forward and backwards.
- To avoid the possibility of burns, do not remove the carpet in the cargo area.

Emission control devices beneath this floor generate high temperatures.

⚠ WARNING

After adjusting the seat, always check that it is securely locked into place by attempting to move the seat forward or backward without using the lock release lever. Sudden or unexpected movement of the driver's seat could cause you to lose control of the vehicle resulting in an accident.

⚠ WARNING

- **Do not adjust the seat while wearing seat belts. Moving the seat cushion forward may cause strong pressure on the abdomen.**
- **Use extreme caution so that hands or other objects are not caught in the seat mechanisms while the seat is moving.**
- **Do not put a cigarette lighter on the floor or seat. When you operate the seat, gas may gush out of the lighter and cause fire.**
- **If there are occupants in the rear seats, be careful while adjusting the front seat position.**
- **Use extreme caution when picking small objects trapped under the seats or between the seat and the center console. Your hands might be cut or injured by the sharp edges of the seat mechanism.**

Feature of Seat Leather

- Leather is made from the outer skin of an animal, which goes through a special process to be available for use. Since it is a natural substance, each part differs in thickness or density.

  Wrinkles may appear as a natural result of stretching and shrinking depending on the temperature and humidity.
- The seat is made of stretchable fabric to improve comfort.
- The parts contacting the body are curved and the side supporting area is high which provides driving comfort and stability.
- Wrinkles may appear naturally from usage. It is not a fault of the product.

⚠ CAUTION

- ***Wrinkles or abrasions which appear naturally from usage are not covered by warranty.***
- ***Belts with metallic accessories, zippers or keys inside the back pocket may damage the seat fabric.***
- ***Make sure not to wet the seat. It may change the nature of natural leather.***
- ***Jeans or clothes which could bleach may contaminate the surface of the seat covering fabric.***

Front seat adjustment - manual

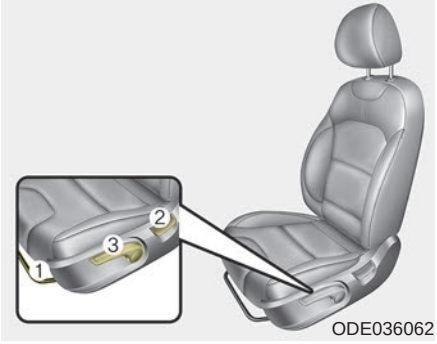

Forward and backward (1)

To move the seat forward or backward:

1. Pull the seat slide adjustment lever up and hold it.
2. Slide the seat to the position you desire.
3. Release the lever and make sure the seat is locked in place.

Adjust the seat before driving, and make sure the seat is locked securely by trying to move forward and backward without using the lever. If the seat moves, it is not locked properly.

Seatback angle (2)

To recline the seatback:

1. Lean forward slightly and lift up the seatback recline lever.
2. Carefully lean back on the seat and adjust the seatback of the seat to the position you desire.
3. Release the lever and make sure the seatback is locked in place. (The lever MUST return to its original position for the seatback to lock.)

Reclining seatback

Sitting in a reclined position when the vehicle is in motion can be dangerous. Even when buckled up, the protections of your restraint system (seat belts and/or air bags) is greatly reduced by reclining your seatback.

⚠ WARNING

NEVER ride with a reclined seatback when the vehicle is moving.

Riding with a reclined seatback increases your chance of serious or fatal injuries in the event of a collision or sudden stop.

Drivers and passengers should ALWAYS sit well back in their seats, properly belted, and with the seatbacks upright.

Seat belts must be snug against your hips and chest to work properly. When the seatback is reclined, the shoulder belt cannot do its job because it will not be snug against your chest. Instead, it will be in front of you. During an accident, you could be thrown into the seat belt, causing neck or other injuries.

The more the seatback is reclined, the greater chance the passenger's hips will slide under the lap belt or the passenger's neck will strike the shoulder belt.

Seat height (for driver`s seat, if equipped) (3)

To change the height of the seat, push the lever upwards or downwards.

- To lower the seat cushion, push the lever down several times.
- To raise the seat cushion, pull the lever up several times.

Front seat adjustment - power (if equipped)

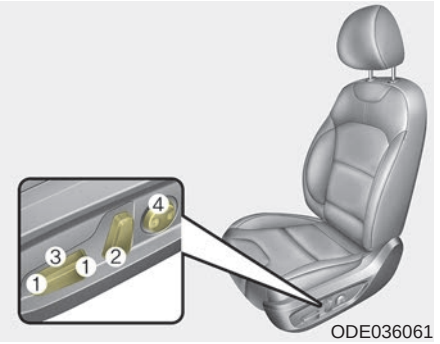

The front seat can be adjusted by using the control switches located on the outside of the seat cushion. Before driving, adjust the seat to the proper position so you can easily control the steering wheel, pedals and switches on the instrument panel.

⚠ WARNING

The power seat is operable with the ignition OFF.

Therefore, children should never be left unattended in the vehicle.

⚠ CAUTION

- ***The power seat is driven by an electric motor. Stop operating once the adjustment is completed. Excessive operation may damage the electrical equipment.***
- ***When in operation, the power seat consumes a large amount of electrical power. To prevent unnecessary charging system drain, don't adjust the power seat longer than necessary while the engine is not running.***
- ***Do not operate two or more power seat control switches at the same time. Doing so may result in power seat motor or electrical component malfunction.***

Forward and backward (1)

Push the control switch forward or backward to move the seat to the desired position. Release the switch once the seat reaches the desired position.

Seatback angle (2)

Push the control switch forward or backward to move the seatback to the desired angle. Release the switch once the seat reaches the desired position.

Seat height (if equipped) (3)

Pull the front portion of the control switch up to raise or press down to lower the front part of the seat cushion. Pull the rear portion of the control switch up to raise or press down to lower the rear part of the seat cushion. Release the switch once the seat reaches the desired position.

Lumbar support (for driver's seat, if equipped) (4)

The lumbar support can be adjusted by pressing the lumbar support switch on the side of the seat.

1. Press the front portion of the switch to increase support, or the rear portion of the switch, to decrease support.
2. Release the switch once it reaches the desired position.

Headrest (for front seat)

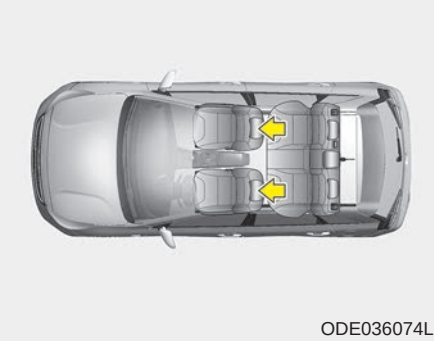

The driver's and front passenger's seats are equipped with a headrest for the occupant's safety and comfort.

The headrest not only provides comfort for the driver and front passenger, but also helps protect the head and neck in the event of a collision.

⚠ WARNING

- **For maximum effectiveness in case of an accident, the headrest should be adjusted so the middle of the headrest is at the same height of the center of gravity of an occupant's head. Generally, the center of gravity of most people's head is similar with the height of the top of their eyes. Also, adjust the headrest as close to your head as possible. For this reason, the use of a cushion that holds the body away from the seatback is not recommended.**
- **Do not operate the vehicle with the headrests removed. Severe injury to the occupants may occur in the event of an accident. Headrests may provide protection against neck injuries when properly adjusted.**
- **Do not adjust the headrest position of the driver's seat while the vehicle is in motion.**

Adjusting the height up and down

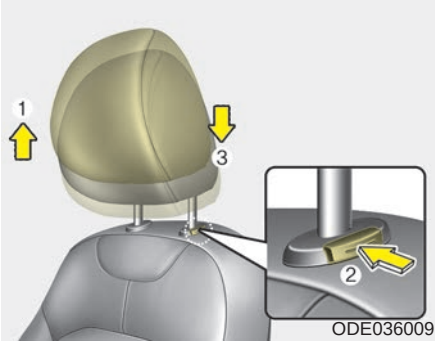

To raise the headrest, pull it up to the desired position (1). To lower the headrest, push and hold the release button (2) and lower the headrest to the desired position (3).

Forward and backward adjustment

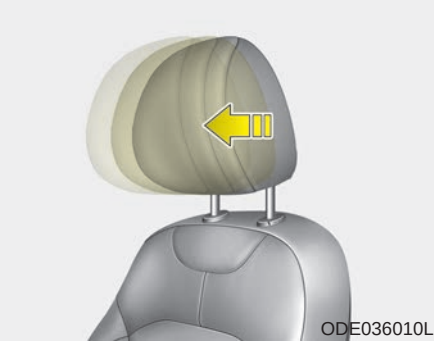

The headrest may be adjusted forward to 3 different positions by pulling the headrest forward to the desired detent.

To adjust the headrest to it's furthest backwards position,

Pull the headrest fully forward to the farthest position and release it.

Adjust the headrest so that it properly supports the head and neck.

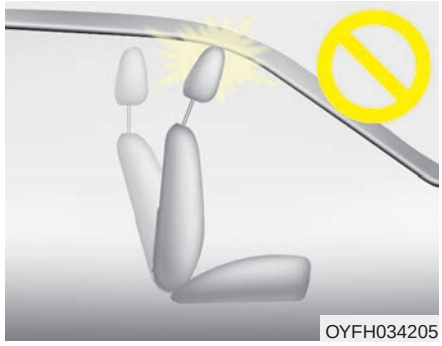

⚠ CAUTION

If you recline the seatback towards the front with the headrest and seat cushion raised, the headrest may come in contact with the sunvisor or other parts of the vehicle.

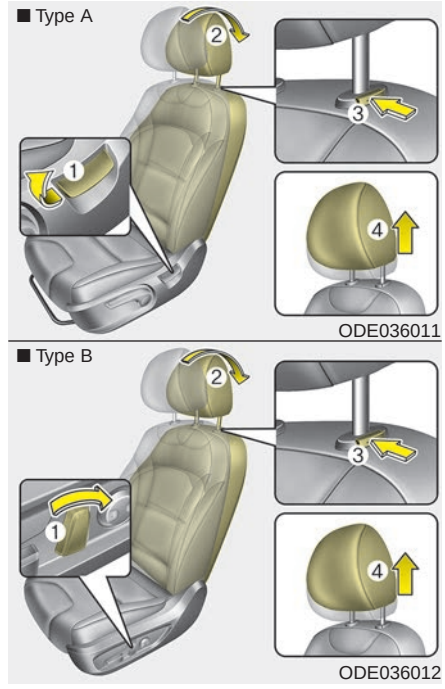

Removal/Reinstall

To remove the headrest:

1. Recline the seatback (2) with the recline dial or switch (1).
2. Raise headrest as far as it can go.
3. Press the headrest release button (3) while pulling the headrest up (4).

⚠ WARNING

NEVER allow anyone to ride in a seat with the headrest removed.

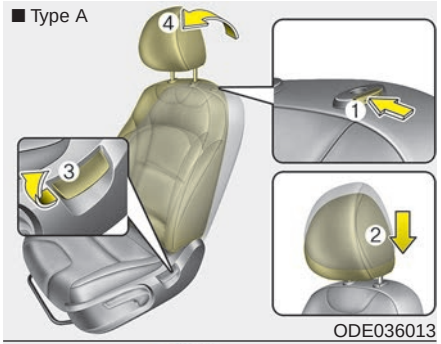

ODE036013

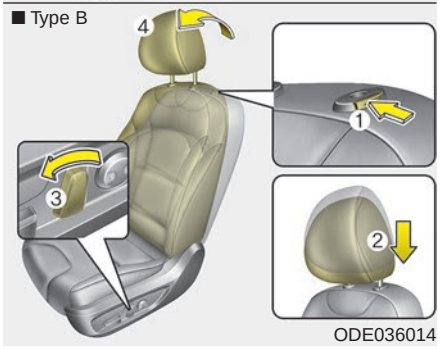

ODE036014

To reinstall the headrest:

1. Put the headrest poles (2) into the holes while pressing the release button or switch (1).
2. Recline the seatback(4) with the recline dial or switch (3).
3. Adjust the headrest to the appropriate height.

⚠ WARNING

Always make sure the headrest locks into position after reinstalling and adjusting it properly.

Seatback pocket

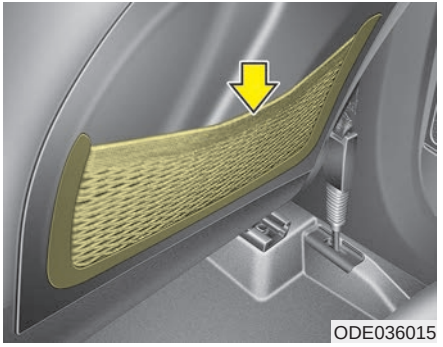
ODE036015

The seatback pocket is provided on the back of the front passenger's and driver's seatbacks.

⚠ WARNING - Seatback pockets

Do not put heavy or sharp objects in the seatback pockets. In an accident they could come loose from the pocket and injure vehicle occupants.

Driver position memory system (if equipped, for power seat)

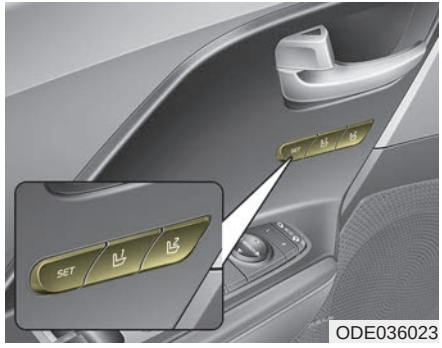

ODE036023

A driver position memory system is provided to store and recall the driver seat and outside rearview mirror position with a simple button operation. By saving the desired position into the system memory, different drivers can reposition the driver seat based upon their driving preference.

If the battery is disconnected, the position memory will be erased and the driving position should be restored in the system.

⚠ WARNING

Never attempt to operate the driver position memory system while the vehicle is moving.

This could result in loss of control, and an accident causing death, serious injury, or property damage.

Storing positions into memory using the buttons on the door

Storing driver's seat positions

1. Shift the shift lever into P while the engine start/stop button is ON or ignition switch ON.
2. Adjust the driver's seat and outside rearview mirror comfortable for the driver.
3. Press SET button on the control panel. The system will beep once.
4. Press one of the memory buttons (1 or 2) within 4 seconds after pressing the SET button. The system will beep twice when memory has been successfully stored.

Recalling positions from memory

1. Shift the shift lever into P while the engine start/stop button is ON or ignition switch ON.
2. To recall the position in the memory, press the desired memory button (1 or 2). The system will beep once, then the driver's seat will automatically adjust to the stored position.

Adjusting the control switch for the driver's seat while the system is recalling the stored position will cause the movement to stop and move in the direction that the control switch is moved.

⚠ WARNING

Use caution when recalling the adjustment memory while sitting in the vehicle. Push the seat position control switch to the desired position immediately if the seat moves too far in any direction.

Easy access function (if equipped)

The system will move the driver's seat automatically as follows:

- Without smart key system
  - It will move the driver's seat rearward when the ignition key is removed and front driver's door is opened.
  - It will move the driver's seat forward when the ignition key is inserted.
- With smart key system
  - It will move the driver's seat rearward when the engine start/stop button is changed to the OFF position and front driver's door is opened.
  - It will move the driver's seat forward when the engine start/stop button is changed to the ACC or START position.
  - It will move the driver's seat forward when you get in your vehicle with the smart key after closing the driver's door.

You can activate or deactivate this feature. Refer to "User settings" in chapter 4.

Rear seat

Folding the rear seat

The rear seatbacks can be folded to facilitate carrying long items or to increase the luggage capacity of the vehicle.

⚠ WARNING

The purpose of the fold-down rear seatbacks is to allow you to carry longer objects that could not be accommodated in the cargo area.

Never allow passengers to sit on top of the folded down seatback while the vehicle is moving. This is not a proper seating position and no seat belts are available for use. This could result in serious injury or death in case of an accident or sudden stop. Objects carried on the folded down seatback should not extend higher than the top of the front seatbacks. This could allow cargo to slide forward and cause injury or damage during sudden stops.

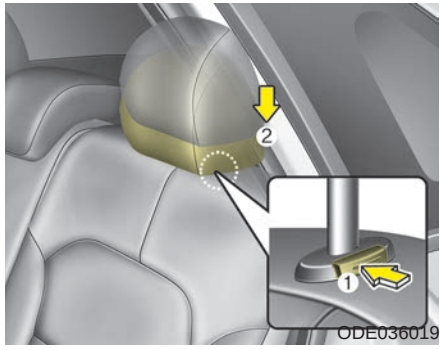

To fold down the rear seatback:

1. Set the front seatback to the upright position and if necessary, slide the front seat forward.
2. Lower the rear head restraints to the lowest position.

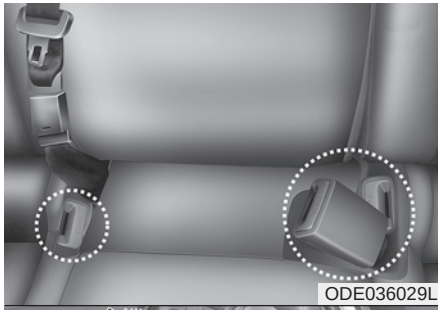

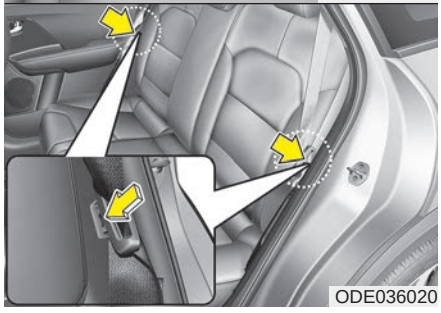

3. When folding the seat back, insert the rear seat belt buckle in the pocket between the rear seatback and cushion then make sure both seatbelts do not interfere with stowed luggage and cargo. Then, insert the seat belt into the two holes located on both sides.

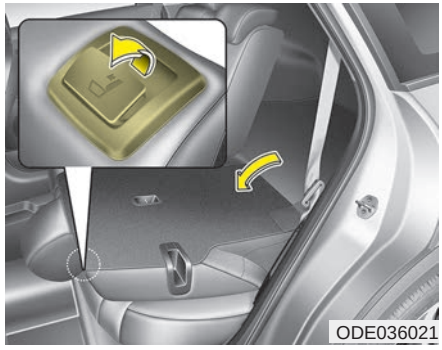

4. Pull on the seatback folding lever, then fold the seat toward the front of the vehicle. When you return the seatback to its upright position, always be sure it has locked into position by pushing on the top of the seatback.

5. To use the rear seat, lift and pull the seatback backward by lifting up seat back. Pull the seatback firmly until it clicks into place. Make sure the seatback is locked in place.
6. Return the rear seat belt to the proper position.

⚠ WARNING

When returning the rear seatback from a folded to an upright position, hold the seatback and return it slowly. Ensure that the seatback is completely locked into its upright position by pushing on the top of the seatback. In an accident or sudden stop, the unlocked seatback could allow cargo to move forward with great force and enter the passenger compartment, which could result in serious injury or death.

⚠ WARNING

Do not place objects in the rear seats, since they cannot be properly secured and may hit vehicle occupants in a collision causing serious injury or death.

⚠ WARNING

Make sure the engine is off, the shift lever is in P (Park), and the parking brake is securely applied whenever loading or unloading cargo. Failure to take these steps may allow the vehicle to move if the shift lever is inadvertently moved to another position.

Armrest (if equipped)

To use the armrest, pull it forward from the seatback.

Headrest

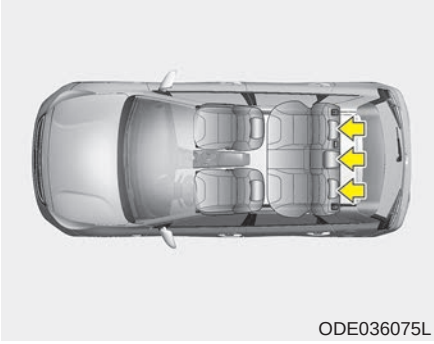

The rear seat(s) is equipped with headrests in all the seating positions for the occupant's safety and comfort.

The headrest not only provides comfort for passengers, but also helps protect the head and neck in the event of a collision.

⚠ WARNING

- **For maximum effectiveness in case of an accident, the headrest should be adjusted so the middle of the headrest is at the same height of the center of gravity of an occupant's head. Generally, the center of gravity of most people's head is similar with the height of the top of their eyes. Also adjust the headrest as close to your head as possible. For this reason, the use of a cushion that holds the body away from the seatback is not recommended.**
- **Do not operate the vehicle with the headrests removed. Severe injury to an occupant may occur in the event of an accident. Headrests may provide protection against severe neck injuries when properly adjusted.**

⚠ CAUTION

When there is no occupant in the rear seats, adjust the height of the headrest to the lowest position. The rear seat headrest can reduce the visibility of the rear area.

Adjusting the height up and down

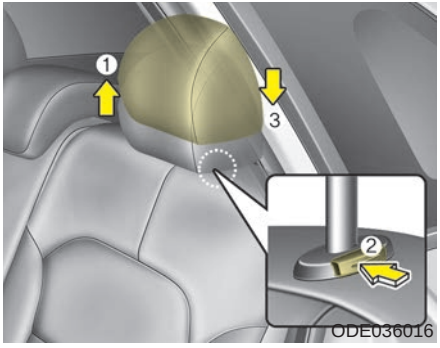

To raise the headrest, pull it up to the desired position (1). To lower the headrest, push and hold the release button (2) on the headrest support and lower the headrest to the desired position (3).

Removal and installation

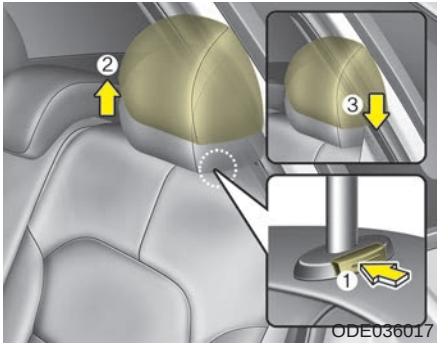

To remove the headrest, raise it as far as it can go then press the release button (1) while pulling the headrest up (2).

To reinstall the headrest, put the headrest poles (3) into the holes while pressing the release button (1). Then adjust it to the appropriate height.

⚠ WARNING

Make sure the headrest locks in position after adjusting it to properly protect the occupants.

SEAT BELTS

Seat belt restraint system

⚠ WARNING

- **For maximum restraint system protection, the seat belts must always be used whenever the vehicle is moving.**
- **Seat belts are most effective when seatbacks are in the upright position.**
- **Children age 12 and under must always be properly restrained. If a child over 12 must be seated in the front seat, he/she must be properly belted and the seat should be moved as far back as possible.**
- **Never wear the shoulder belt under your arm or behind your back. An improperly positioned shoulder belt can cause serious injuries in a crash.**

(Continued)

(Continued)

The shoulder belt should be positioned midway over your shoulder across your collarbone.

- **Never wear a seat belt over fragile objects. If there is a sudden stop or impact, the seat belt can damage it.**
- **Avoid wearing twisted seat belts. A twisted belt can't do its job well. In a collision, it could even cut into you. Be sure the belt webbing is straight and not twisted.**
- **Be careful not to damage the belt webbing or hardware. If the belt webbing or hardware is damaged, replace it.**

⚠ WARNING

Seat belts are designed to bear upon the bony structure of the body, and should be worn low across the front of the pelvis or the pelvis, chest and shoulders, as applicable; wearing the lap section of the belt across the abdominal area must be avoided.

Seat belts should be adjusted as firmly as possible, consistent with comfort, to provide the protection for which they have been designed.

A slack belt will greatly reduce the protection afforded to the wearer.

(Continued)

(Continued)

Care should be taken to avoid contamination of the webbing with polishes, oils and chemicals, and particularly battery acid. Cleaning may safely be carried out using mild soap and water. The belt should be replaced if webbing becomes frayed, contaminated or damaged. It is essential to replace the entire assembly after it has been worn in a severe impact even if damage to the assembly is not obvious. Belts should not be worn with straps twisted. Each belt assembly must only be used by one occupant; it is dangerous to put a belt around a child being carried on the occupant's lap.

⚠ WARNING

- No modifications or additions should be made by the user which will either prevent the seat belt adjusting devices from operating to remove slack, or prevent the seat belt assembly from being adjusted to remove slack.
- When you fasten the seat belt, be careful not to latch the seat belt in buckles of other seat. It's very dangerous and you may not be protected by the seat belt properly.
- Do not unfasten the seat belt and do not fasten and unfasten the seat belt repeatedly while driving. This could result in loss of control, and an accident causing death, serious injury, or property damage.

(Continued)

(Continued)

- When fastening the seat belt, make sure that the seat belt does not pass over objects that are hard or can break easily.
- Make sure there is nothing in the buckle. The seat belt may not be fastened securely.

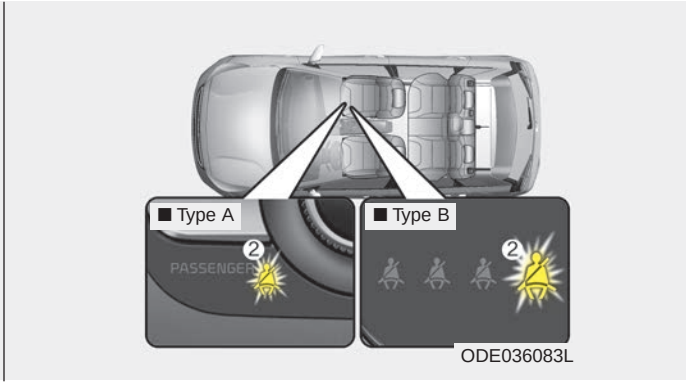

Front seat belt warning

Driving conditions	Conditions		Warning pattern	
	Seat belt	**Vehicle speed**	**Light**	**Sound**
While parked (Ignition switch ON)	Buckled	0km/h	Illuminates (for 6 seconds)	No sound
	Unbuckled			- Sounds (for 6 seconds, driver`s seat) - No sound (for passenger's seat)
While driven	Unbuckled	Less than 20km/h	Continuously Illuminates	No sound
		Including and more than 20km/h	Blinks continuously	Alarm sounds for 100 seconds
	When the seatbelt is unbuckled after use	Less than 20km/h	Continuously Illuminates	No sound
		Including and more than 20km/h	Blinks continuously	Alarm sounds for 100 seconds

⚠ WARNING

Riding in an improper position adversely affects the front seat belt warning system. It is important for the driver to instruct the passenger to properly be seated as instructed in this manual.

✻ NOTICE

- You can find the front passenger's seat belt warning light on the center fascia panel.
- Although the front passenger seat is not occupied, the seat belt warning light will blink or illuminate for 6 seconds.
- The front passenger's seat belt warning may operate when luggage is placed on the front passenger seat.

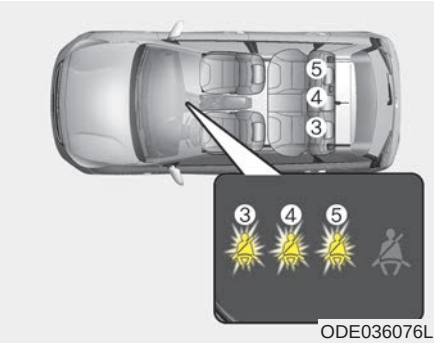

Rear passenger's seat belt warning

If the rear passenger's lap/shoulder belt is/are connected and disconnected twice within 9 seconds after the belt is fastened, the corresponding seat belt warning light will not operate.

Driving conditions	Conditions		Warning pattern	
	Seat belt	Vehicle speed	Light	Sound
While parked (ignition switch on)	Buckled	0km/h	Illuminates (for 6 seconds)	No sound
	Unbuckled	0km/h	Illuminates (for 6 seconds)	No sound
While driven	Unbuckled	Equal to or less than 9km/h	No illuminates	No sound
		Over 9km/h	Illuminates (for 35 seconds)	No sound
	When the seat-belt is unbuckled after use	Under 20km/h	Illuminates (for 35 seconds)	No sound
		Over 20km/h	Blinks continuously (for 35 seconds)	Sound (for 35 seconds)

Lap/Shoulder belt

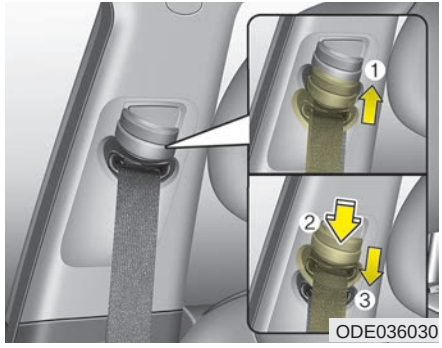

Height adjustment (For Front seat)

You can adjust the height of the shoulder belt anchor to one of 4 positions for maximum comfort and safety.

The height of the adjusting seat belt should not be too close to your neck. You will not be getting the most effective protection. The shoulder portion should be adjusted so that it lies across your chest and midway over your shoulder near the door and not your neck.

To adjust the height of the seat belt anchor, lower or raise the height adjuster into an appropriate position.

To raise the height adjuster, pull it up (1). To lower it, push it down (3) while pressing the height adjuster button (2).

Release the button to lock the anchor into position. Try sliding the height adjuster to make sure that it has locked into position.

⚠ WARNING

- **Verify the shoulder belt anchor is locked into position at the appropriate height. Never position the shoulder belt across your neck or face. Improperly positioned seat belts can cause serious injuries in an accident.**
- **Failure to replace seat belts after an accident could leave you with damaged seat belts that will not provide protection in the event of another collision leading to personal injury or death. Replace your seat belts after being in an accident as soon as possible.**

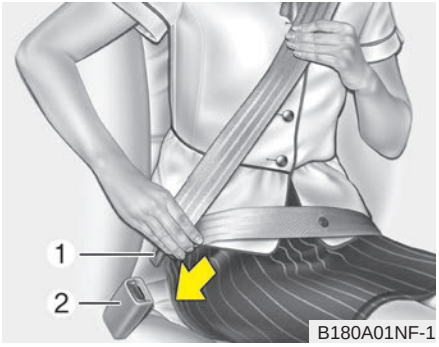

To fasten your seat belt:

To fasten your seat belt, pull it out of the retractor and insert the metal tab (1) into the buckle (2). There will be an audible "click" when the tab locks into the buckle.

The seat belt automatically adjusts to the proper length only after the lap belt portion is adjusted manually so that it fits snugly around your hips. If you lean forward in a slow, easy motion, the belt will extend and let you move around. If there is a sudden stop or impact, however, the belt will lock into position. It will also lock if you try to lean forward too quickly.

✻ NOTICE

If you are not able to pull out the seat belt from the retractor, firmly pull the belt out and release it. Then you will be able to pull the belt out smoothly.

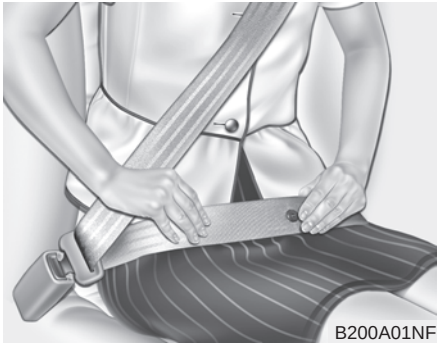

⚠ WARNING

You should place the lap belt portion as low as possible and snugly across your hips, not on your waist. If the lap belt is located too high on your waist, it may increase the chance of injury in the event of a collision. Both arms should not be under or over the belt. Rather, one should be over and the other under, as shown in the illustration.

Never wear the seat belt under the arm near the door.

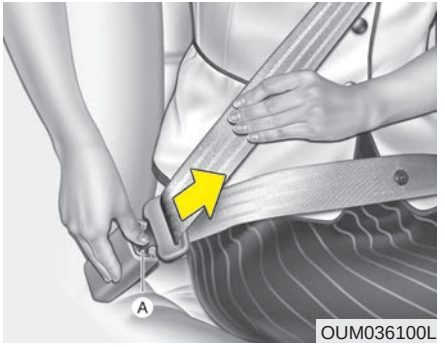

To release the seat belt:

The seat belt is released by pressing the release button (A) in the locking buckle. When it is released, the belt should automatically draw back into the retractor.

If this does not happen, check the belt to be sure it is not twisted, then try again.

Lap belt (if equipped)

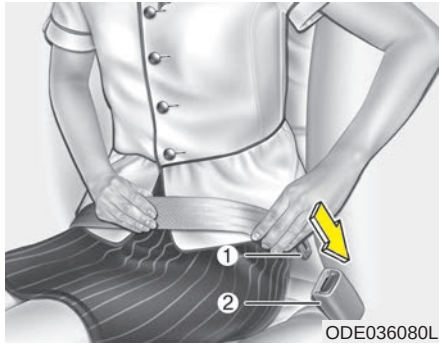

ODE036080L

To fasten your seat belt:

To fasten a 2-point static type belt, insert the metal tab (1) into the locking buckle (2). There will be an audible "click" when the tab locks into the buckle. Check to make sure the belt is properly locked and that the belt is not twisted.

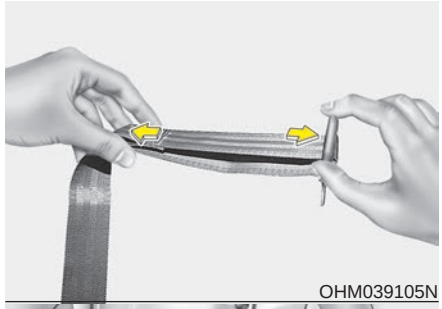
OHM039105N

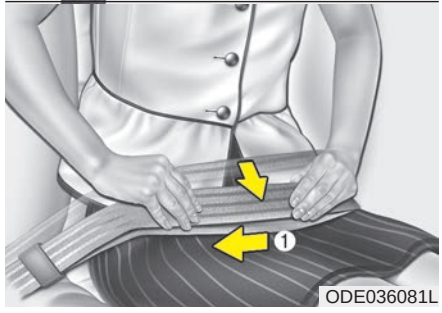

ODE036081L

With a 2-point static type seat belt, the length must be adjusted manually so it fits snugly around your body. Fasten the belt and pull on the loose end to tighten. The belt should be placed as low as possible on your hips (1), not on your waist. If the belt is too high, it could increase the possibility of your being injured in an accident.

When using the rear center seat belt, the buckle with the “CENTER” mark must be used.

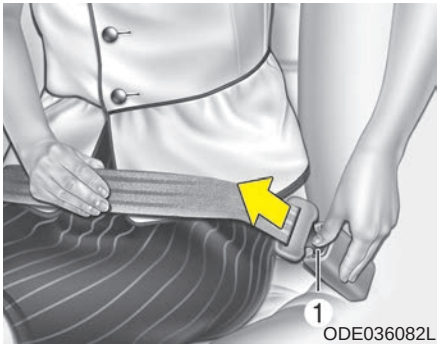

To release the seat belt:

When you want to release the seat belt, press the button (1) in the locking buckle.

⚠ WARNING

The center lap belt latching mechanism is different from those for the rear seat shoulder belts. When fastening the rear seat shoulder belts or the center lap belt, make sure they are inserted into the correct buckles to obtain maximum protection from the seat belt system and assure proper operation.

Stowing the rear seat belt

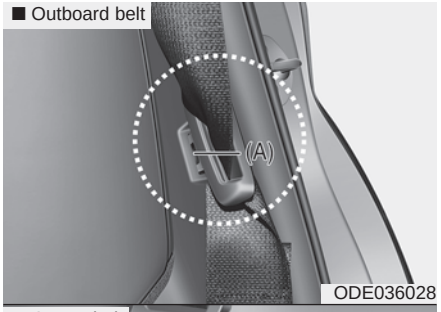

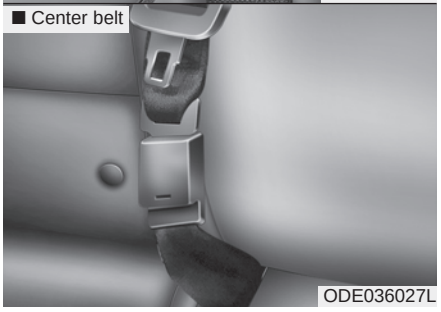

- If the center seat belt is not in use, always lock the latch plate into the buckle as above illustration.

- The rear seat belt buckles can be stowed in the pocket between the rear seatback and cushion when not in use.
- Insert the seat belt into the two holes located on both sides. It will help keep the belts from being trapped behind or under the seats.

  After inserting the seat belt, tighten the belt webbing by pulling it up.

Pre-tensioner seat belt (if equipped)

Your vehicle is equipped with driver's and front passenger's and rear side passenger's (if equipped) pre-tensioner seat belts (retractor pre-tensioner). The pre-tensioner seat belts can be activated, where the frontal collision is severe enough, together with the air bags.

When the vehicle stops suddenly, or if the occupant tries to lean forward too quickly, the seat belt retractor will lock into position. In certain frontal collisions, the pre-tensioner will activate and pull the seat belt into tighter contact against the occupant's body.

- Retractor Pretensioner

  The purpose of the retractor pre-tensioner is to make sure that the shoulder belts fit in tightly against the occupant's upper body in certain frontal collisions.

If the system senses excessive tension on the driver or passenger's seat belt when the pre-tensioner system activates, the load limiter inside the retractor pre-tensioner will release some of the pressure on the affected seat belt. (if equipped)

⚠ WARNING

For your safety, be sure that the belt webbing is not loose or twisted and always sit properly on your seat.

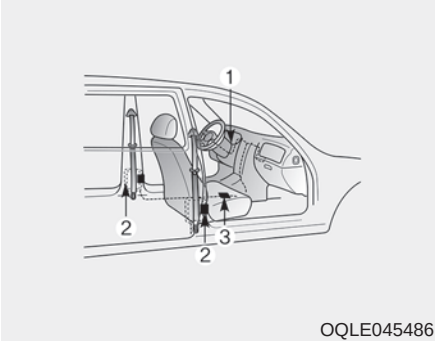

OQLE045486

The seat belt pre-tensioner system consists mainly of the following components. Their locations are shown in the illustration:

(1) SRS air bag warning light

(2) Retractor pre-tensioner assembly

(3) SRS control module

⚠ WARNING

To obtain maximum benefit from a pre-tensioner seat belt:

1. **The seatbelt must be worn correctly and adjusted to the proper position. Please read and follow all of the important information and precautions about your vehicle's occupant safety features – including seat belts and air bags – that are provided in this manual.**
2. **Be sure you and your passengers always wear seat belts properly.**

✻ NOTICE

- **When the pre-tensioner seat belts are activated, a loud noise may be heard and fine dust, which may appear to be smoke, may be visible in the passenger compartment. These are normal operating conditions and are not hazardous.**
- **Although it is harmless, the fine dust may cause skin irritation and should not be breathed for prolonged periods. Wash all exposed skin areas thoroughly after an accident in which the pre-tensioner seat belts were activated.**
- **Because the sensor that activates the SRS air bag is connected with the pre-tensioner seat belt, the SRS air bag warning light on the instrument panel will illuminate for approximately 6 seconds after the ignition switch has been turned to the "ON" position, and then it should turn off.**

⚠ CAUTION

If the pre-tensioner seat belt is not working properly, the SRS air bag warning light will illuminate even if there is no malfunction of the SRS air bag. If the SRS air bag warning light does not illuminate when the ignition key is turned to ON, or if it remains illuminated after illuminating for approximately 6 seconds, or if it illuminates while the vehicle is being driven, we recommend that the system be inspected by an authorized Kia dealer.

⚠ WARNING

- **Pre-tensioners are designed to operate only one time. After activation, pre-tensioner seat belts must be replaced. All seat belts, of any type, should always be replaced after they have been worn during a collision.**
- **The pre-tensioner seat belt assembly mechanisms become hot during activation. Do not touch the pre-tensioner seat belt assemblies for several minutes after they have been activated.**
- **Do not attempt to inspect or replace the pre-tensioner seat belts yourself. We recommend that the system be inspected by an authorized Kia dealer.**
- **Do not attempt to service or repair the pre-tensioner seat belt system in any manner.**

(Continued)

(Continued)

- **Improper handling of the pre-tensioner seat belt assemblies, and failure to heed the warnings not to strike, modify, inspect, replace, service or repair the pre-tensioner seat belt assemblies may lead to improper operation or inadvertent activation and serious injury.**
- **Always wear the seat belts when driving or riding in a motor vehicle.**
- **If the vehicle or pre-tensioner seat belt must be discarded, we recommend that you contact an authorized Kia dealer.**

⚠ CAUTION

Body work on the front area of the vehicle may damage the pre-tensioner seat belt system. Therefore, we recommend that the system be serviced by an authorized Kia dealer.

Seat belt precautions

⚠ WARNING

All occupants of the vehicle must wear their seat belts at all times. Seat belts and child restraints reduce the risk of serious or fatal injuries for all occupants in the event of a collision or sudden stop. Without a seat belt, occupants could be shifted too close to a deploying air bag, strike the interior structure or be thrown from the vehicle. Properly worn seat belts greatly reduce these hazards.

Always follow the precautions about seat belts, air bags and occupant seating contained in this manual.

Infant or small child

You should be aware of the specific requirements in your country. Child and/or infant seats must be properly placed and installed in the vehicle seat. For more information about the use of these restraints, refer to “Child restraint system” in this section.

⚠ WARNING

Every person in your vehicle needs to be properly restrained at all times, including infants and children. Never hold a child in your arms or lap when riding in a vehicle. The violent forces created during a crash will tear the child from your arms and throw the child against the interior. Always use a child restraint appropriate for your child's height and weight.

✻ NOTICE

Small children are best protected from injury in an accident when properly restrained in the rear seat by a child restraint system that meets the requirements of the Safety Standards of your country. Before buying any child restraint system, make sure that it has a label certifying that it meets Safety Standards of your country. The restraint must be appropriate for your child's height and weight. Check the label on the child restraint for this information. Refer to "Child restraint system" in this section.

Larger children

Children who are too large for child restraint systems should always occupy the rear seat and use the available lap/shoulder belts. The lap portion should be fastened and snugged on the hips and as low as possible. Check if the belt fits periodically. A child's squirming could put the belt out of position. Children are given the most safety in the event of an accident when they are restrained by a proper restraint system in the rear seat. If a larger child (over age 12) must be seated in the front seat, the child should be securely restrained by the available lap/shoulder belt and the seat should be placed in the rearmost position. Children age 12 and under should be restrained securely in the rear seat. NEVER place a rear facing child seat in the front seat of a vehicle, unless the air bag is deactivated.

If the shoulder belt portion slightly touches the child's neck or face, try placing the child closer to the center of the vehicle. If the shoulder belt still touches their face or neck they need to be returned to a child restraint system.

⚠ WARNING - Shoulder belts on small children

- **Never allow a shoulder belt to be in contact with a child's neck or face while the vehicle is in motion.**
- **If seat belts are not properly worn and adjusted on children, there is a risk of death or serious injury.**

Pregnant women

The use of a seat belt is recommended for pregnant women to lessen the chance of injury in an accident. When a seat belt is used, the lap belt portion should be placed as low and securely as possible on the hips, not across the abdomen. For specific recommendations, consult a physician.

⚠ WARNING - Pregnant women

Pregnant women must never place the lap portion of the safety belt over the area of the abdomen where the fetus is located or above the abdomen where the belt could crush the fetus during an impact.

Injured person

A seat belt should be used when an injured person is being transported. When this is necessary, you should consult a physician for recommendations.

One person per belt

Two people (including children) should never attempt to use a single seat belt. This could increase the severity of injuries in case of an accident.

Do not lie down

To reduce the chance of injuries in the event of an accident and to achieve maximum effectiveness of the restraint system, all passengers should be sitting up and the front and rear seats should be in an upright position when the vehicle is moving. A seat belt cannot provide proper protection if the person is lying down in the rear seat or if the front and rear seats are in a reclined position.

⚠ WARNING

Riding with a reclined seatback increases your chance of serious or fatal injuries in the event of a collision or sudden stop. The protection of your restraint system (seat belts and air bags) is greatly reduced by reclining your seat. Seat belts must be secured against your hips and chest to work properly. The more the seatback is reclined, the greater the chance an occupant's hips will slide under the lap belt causing serious internal injuries. Also, the shoulder belt may strike the occupant's neck. Drivers and passengers should always sit well back in their seats, properly belted, and with the seatbacks upright.

Care of seat belts

Seat belt systems should never be disassembled or modified. In addition, care should be taken to assure that seat belts and belt hardware are not damaged by seat hinges, doors or other abuse.

⚠ WARNING

When you return the rear seatback to its upright position after the rear seatback has been folded down, be careful not to damage the seat belt webbing or buckle. Be sure that the webbing or buckle does not get caught or pinched in the rear seat. A seat belt with damaged webbing or buckle could possibly fail during a collision or sudden stop, resulting in serious injury. If the webbing or buckles are damaged, get them replaced immediately.

Periodic inspection

All seat belts should be inspected periodically for wear or damage of any kind. Any damaged parts should be replaced as soon as possible.

Keep belts clean and dry

Seat belts should be kept clean and dry. If belts become dirty, they can be cleaned by using a mild soap solution and warm water. Bleach, dye, strong detergents or abrasives should not be used because they may damage and weaken the fabric.

When to replace seat belts

Entire in-use seat belt assembly or assemblies should be replaced if the vehicle has been involved in an accident. This should be done even if no damage is visible. We recommend that you consult an authorized Kia dealer.

CHILD RESTRAINT SYSTEM (CRS)

Our recommendation:

Children always in the rear

⚠ WARNING

Always properly restrain children in the vehicle. Children of all ages are safer when riding in the rear seats. Never place a rearward-facing Child Restraint System on the front passenger seat, unless the air bag is deactivated.

Children under age 13 should always ride in the rear seats and must always be properly restrained to minimize the risk of injury in an accident, sudden stop or sudden maneuver.

According to accident statistics, children are safer when properly restrained in the rear seats than in the front seat. Children too large for a Child Restraint System must use the seat belts provided.

Most countries have regulations which require children to travel in approved Child Restraint Systems.

The laws governing the age or height/weight restrictions at which seat belts can be used instead of Child Restraint System differs among countries, so you should be aware of the specific requirements in your country, and where you are travelling.

Child Restraint Systems must be properly installed in the vehicle seat. Always use a commercially available Child Restraint System that meets the requirements of your country.

Child Restraint System (CRS)

Infants and younger children must be restrained in an appropriate rearward-facing or forward-facing CRS that has first been properly secured to the seat of the vehicle. Read and comply with the instructions for installation and use provided by the manufacturer of the Child Restraint System.

⚠ WARNING

- **Always follow the Child Restraint System manufacturer's instructions for installation and use.**
- **Always properly restrain your child in the Child Restraint System.**
- **Do not use an infant carrier or a child safety seat that "hooks" over a seatback, it may not provide adequate protection in an accident.**
- **After an accident, we recommend a Kia dealer to check the Child Restraint System, seat belts, ISOFIX anchorages and top-tether anchorages.**

Selecting a Child Restraint System (CRS)

When selecting a Child Restraint System for your child, always:

- Make sure the Child Restraint System has a label certifying that it meets applicable Safety Standards of your country.

  A Child Restraint System may only be installed if it was approved in accordance with the requirements of ECE-R44 or ECE-R129.
- Select a Child Restraint System based on your child's height and weight. The required label or the instructions for use typically provide this information.
- Select a Child Restraint System that fits the vehicle seating position where it will be used.

  For the suitability of Child Restraint Systems on the vehicle's seating positions, please refer to the installation tables on pages 3-41 and 3-44 to 3-46.
- Read and comply with the warnings and instructions for installation and use provided with the Child Restraint System.

Child Restraint System types

There are three main types of Child Restraint Systems: rearward-facing, forward-facing and booster Child Restraint Systems.

They are classified according to the child's age, height and weight.

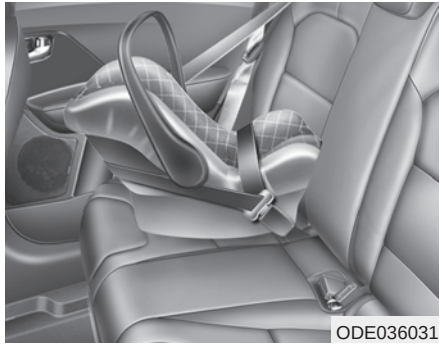
ODE036031

Rearward-facing Child Restraint System

A rearward-facing Child Restraint System provides restraint with the seating surface against the back of the child. The harness system holds the child in place, and in an accident, acts to keep the child positioned in the Child Restraint Systems and reduce the stress to the fragile neck and spinal cord.

All children under the age of one year must always ride in a rearward-facing Child Restraint System. There are different types of rearward-facing Child Restraint Systems: infant-only Child Restraint Systems can only be used rearward-facing. Convertible and 3-in-1 Child Restraint Systems typically have higher height and weight limits for the rearward-facing position, allowing you to keep your child rearward-facing for a longer period of time.

Keep using Child Restraint Systems in the rearward-facing position as long as children fit within the height and weight limits allowed by the Child Restraint System's manufacturer.

Forward-facing Child Restraint System

A forward-facing Child Restraint System provides restraint for the child's body with a harness. Keep children in a forward-facing Child Restraint System with a harness until they reach the top height or weight limit allowed by your Child Restraint System's manufacturer.

Once your child outgrows the forward-facing Child Restraint System, your child is ready for a booster seat.

Booster seats

A booster seat is a Child Restraint System designed to improve the fit of the vehicle's seat belt system. A booster seat positions the seat belt so that it fits properly over the stronger parts of your child's body. Keep your children in booster seats until they are big enough to fit in a seat belt properly.

For a seat belt to fit properly, the lap belt must lie comfortable across the upper thighs, not the stomach. The shoulder belt should lie comfortable across the shoulder and chest and not across the neck or face. Children under age 13 must always be properly restrained to minimize the risk of injury in an accident, sudden stop or sudden maneuver.

Installing a Child Restraint System (CRS)

⚠ WARNING

Before installing your Child Restraint System always:

Read and follow the instructions provided by the manufacturer of the Child Restraint System.

Failure to follow all warnings and instructions could increase the risk of the SERIOUS INJURY or DEATH if an accident occurs.

⚠ WARNING

If the vehicle headrest prevents proper installation of a Child Restraint System, the headrest of the respective seating position shall be readjusted or entirely removed.

After selecting a proper Child Restraint System for your child and checking that the Child Restraint System fits properly on the seating position, there are three general steps for a proper installation:

- **Properly secure the Child Restraint System to the vehicle.** All Child Restraint Systems must be secured to the vehicle with the lap belt or lap part of a lap/shoulder belt or with the ISOFIX top-tether and/or ISOFIX anchorage and/or with the support leg.
- **Make sure the Child Restraint System is firmly secured.** After installing a Child Restraint System to the vehicle, push and pull the seat forward and from side-to-side to verify that it is securely attached to the seat. A Child Restraint System secured with a seat belt should be installed as firmly as possible. However, some side-to-side movement can be expected.

  When installing a Child Restraint System, adjust the vehicle seat and seatback (up and down, forward and rearward) so that your child fits in the Child Restraint System in a confortable manner.
- **Secure the child in the Child Restraint System.** Make sure the child is properly strapped in the Child Restraint System according to the Child Restraint System manufacturer's instructions.

⚠ CAUTION

A Child Restraint System in a closed vehicle can become very hot. To prevent burns, check the seating surface and buckles before placing your child in the Child Restraint System.

ISOFIX anchorage and top-tether anchorage (ISOFIX anchorage system) for children

The ISOFIX system holds a Child Restraint System during driving and in an accident. This system is designed to make installation of the Child Restraint System easier and reduce the possibility of improperly installing your Child Restraint System. The ISOFIX system uses anchors in the vehicle and attachments on the Child Restraint System. The ISOFIX system eliminates the need to use seat belts to secure the Child Restraint System to the rear seats.

ISOFIX anchorages are metal bars built into the vehicle. There are two lower anchors for each ISOFIX seating position that will accommodate a Child Restraint System with lower attachments.

To use the ISOFIX system in your vehicle, you must have a Child Restraint System with ISOFIX attachments.

The Child Restraint System manufacturer will provide you with instructions on how to use the Child Restraint System with its attachments for the ISOFIX anchorages.

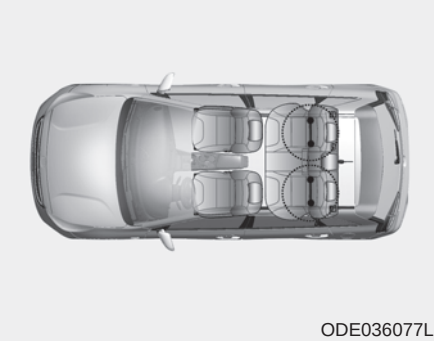

ISOFIX anchorages have been provided in the left and right outboard rear seating positions. Their locations are shown in the illustration.

⚠ WARNING

Do not attempt to install a Child Restraint System using ISOFIX anchorages in the rear center seating position. There are no ISOFIX anchorages provided for this seat. Using the outboard seat anchorages, for the CRS installation on the rear center seating position, can damage the anchorages.

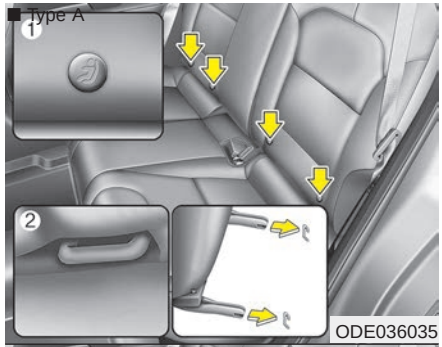

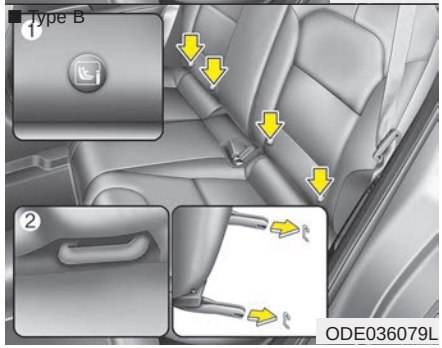

ISOFIX anchorages are located between the seatback and the seat cushion of the rear seat left and right outboard seating positions, indicated by the symbols.

❊ (1) : ISOFIX Anchor Position Indicator (Type A- ,Type B-)

(2) : ISOFIX Anchor

Securing a Child Restraint System with the "ISOFIX Anchorage System"

To install an i-Size or ISOFIX-compatible Child Restraint System in either of the rear outboard seating positions:

1. Move the seat belt buckle away from the ISOFIX anchorages.
2. Move any other objects away from the anchorages that could prevent a secure connection between the Child Restraint System and the ISOFIX anchorages.
3. Place the Child Restraint System on the vehicle seat, then attach the seat to the ISOFIX anchorages according to the instructions provided by the Child Restraint System manufacturer.
4. Follow the instructions of the Child Restraint System's manufacturer for proper installation and connection of the ISOFIX attachments on the Child Restraint System to the ISOFIX anchorages.

⚠ WARNING

Take the following precautions when using the ISOFIX system:

- **Read and follow all installation instructions provided with your Child Restraint System.**
- **To prevent the child from reaching and taking hold of unretracted seat belts, buckle all unused rear seat belts and retract the seat belt webbing behind the child. Children can be strangled if a shoulder belt becomes wrapped around their neck and the seat belt tightens.**
- **NEVER attach more than one Child Restraint System to a single anchorage. This could cause the anchor or attachment to come loose or break.**

(Continued)

(Continued)

- **Always have the ISOFIX system inspected by your dealer after an accident. An accident can damage the ISOFIX system and may not properly secure the Child Restraint System.**

Securing a Child Restraint System seat with "Top-tether Anchorage" system (if equipped)

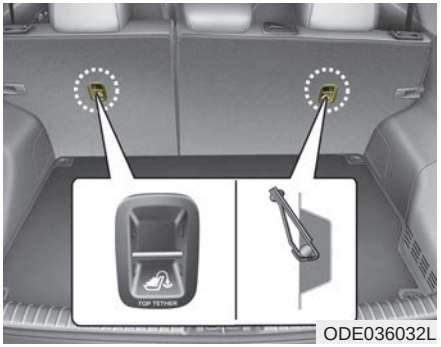

ODE036032L

Child restraint system top tether anchorages are located on the back of the rear seatbacks.

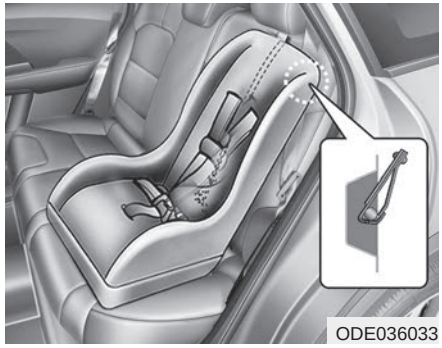
ODE036033

1. Route the Child Restraint System top-tether strap over the seatback. Placing the top tether strap, please follow the instructions of the Child Restraint System manufacturer.
2. Connect the top-tether strap to the top-tether anchorage, then tighten the top-tether strap according to the instructions of your Child Restraint System's manufacturer to firmly attach the Child Restraint System to the seat.

⚠ WARNING

Take the following precautions when installing the top-tether:

- **Read and follow all installation instructions provided with your Child Restraint System.**
- **NEVER attach more than one Child Restraint System to a single ISOFIX top-tether anchorage. This could cause the anchorage or attachment to come loose or break.**
- **Do not attach the top-tether to anything other than the correct top-tether anchorage. It may not work properly if attached to something else.**

(Continued)

(Continued)

- **Child Restraint System anchorages are designed to withstand only those loads imposed by correctly fitted Child Restraint System.**

  Under no circumstances are they to be used for adult seat belts or harnesses or for attaching other items or equipment to the vehicle.

Suitability of each seating position for ISOFIX Child Restraint Systems according to ECE regulations

Mass Group	Size Class	Fixture	Vehicle ISOFIX positions			
			1st	2nd row		
			Passenger	Left Hand	Center	Right Hand
Carrycot	F	ISO/L1	N/A	X	N/A	X
	G	ISO/L2	N/A	X	N/A	X
0- : UP TO 10KG	E	ISO/R1	N/A	IL	N/A	IL
0+ : UP TO 13KG	E	ISO/R1	N/A	IL	N/A	IL
	D	ISO/R2	N/A	IL	N/A	IL
	C	ISO/R3	N/A	IL	N/A	IL
1 : 9 TO 18KG	D	ISO/R2	N/A	IL	N/A	IL
	C	ISO/R3	N/A	IL	N/A	IL
	B	ISO/F2	N/A	IUF,IL	N/A	IUF,IL
	B1	ISO/F2X	N/A	IUF,IL	N/A	IUF,IL
	A	ISO/F3	N/A	IUF,IL	N/A	IUF,IL

IUF = Sutiable for ISOFIX Forward-Facing Child Restraint Systems of universal category approved for use in the mass group.

IL = Suitable for particular ISOFIX Child Restraint Systems given in the attached list. These ISOFIX CRS are those of the "specific vehicle", "restricted" or "semi-universal" categories.

X = ISOFIX position not suitable for ISOFIX Child Restraint System in this mass group and/or this size class.

A - ISO/F3 : Full-Height forward-facing toddler Child Restraint System (height 720mm)

B - ISO/F2 : Reduced-height forward-facing toddler Child Restraint System (height 650mm)

B1 - ISO/F2X : Reduced-height second version back surface shape forward-facing toddler Child Restraint System (height 650mm)

C - ISO/R3 : Full-size rearward-facing toddler Child Restraint System

D - ISO/R2 : Reduced-size rearward-facing toddler Child Restraint System

E - ISO/R1 : Infant-size rearward-facing Child Restraint System

F - ISO/L1 : Left lateral facing position Child Restraint System (carry-cot)

G - ISO/L2 : Right lateral facing position Child Restraint System (carry-cot)

Securing a Child Restraint System with a lap/shoulder belt

When not using the ISOFIX system, all Child Restraint Systems must be secured to a rear seat with the lap part of a lap/shoulder belt.

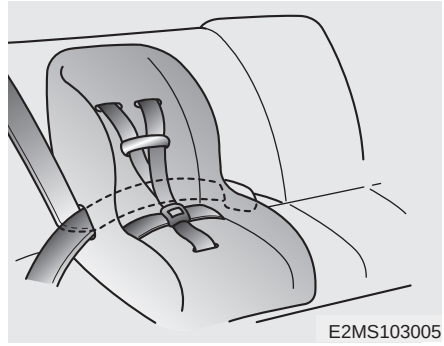
E2MS103005

Installing a Child Restraint System with a lap/shoulder belt

To install a Child Restraint System on the rear seats, do the following:

1. Place the Child Restraint System on a rear seat and route the lap/shoulder belt around or through the Child Restraint System, following the Child Restraint System manufacturer's instructions.

   Make sure the seat belt webbing is not twisted.

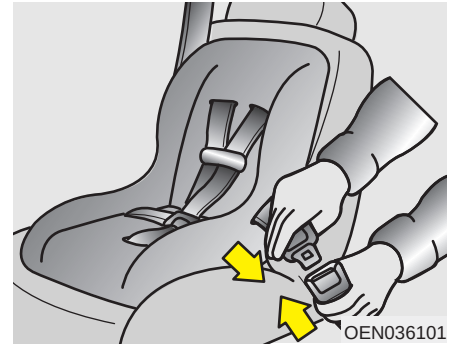
OEN036101

2. Fasten the lap/shoulder belt latch into the buckle. Listen for the distinct "click" sound. Position the release button so that it is easy to access in case of an emergency.

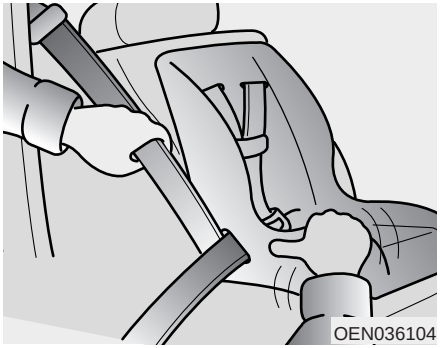

3. Remove as much slack from the belt as possible by pushing down on the Child Restraint System while feeding the shoulder belt back into the retractor.
4. Push and pull on the Child Restraint System to confirm that the seat belt is holding it firmly in place.

If your Child Restraint System manufacturer recommends the use of a top-tether with the lap/shoulder belt, see page 3-39

To remove the Child Restraint System, press the release button on the buckle and then pull the lap/shoulder belt out of the Child Restraint System and allow the seat belt to retract fully.

Suitability of each seating position for "universal" category belted Child Restraint Systems according to ECE regulations (For Europe)

Use Child Restraint System that have been officially approved and are appropriate for your children. When using the Child Restraint System, refer to the following table.

Mass Group		Seating Position				
		Front Passenger		Second Row		
		Airbag activated	Airbag deactivated	Outboard Left	Center (3 POINT BELT)	Outboard Right
Group 0 (0-9months)	up to 10kg	X	U*	U	U	U
Group 0 + (0-2years)	up to 13kg	X	U*	U	U	U
Group I (9months-4years)	9 to 18kg	X	U*	U	U	U
Group II (15 to 25kg)	15 to 25kg	UF	U*	U	U	U
Group III (22 to 36kg)	22 to 36kg	UF	U*	U	U	U

U = Suitable for "universal" category Child Restraint Systems approved for use in this mass group

U* = Suitable for "universal" category Child Restraint Systems with seat height adjusted to the highest and rearmost position

UF = Suitable for forward facing "universal" category restraints approved for use in this mass group

L = Suitable for particular child restraints given on attached list. These restraints may be of the "specific vehicle", "restricted" or "semi-universal" categories.

B = Built-in restraint approved for this mass group.

X = Seat position not suitable for children in this mass group.

❊ Never install a Child Restraint System with a support leg on the front passenger seat and the second row center seat.

Suitability of each seating position for "universal" category belted Child Restraint Systems according to ECE regulations (Except Europe)

Use Child Restraint System that have been officially approved and are appropriate for your children. When using the Child Restraint System, refer to the following table.

Mass Group		Seating Position					
		Front Passenger		Second Row			
		Airbag activated	Airbag deactivated	Outboard Left	Center (3 POINT BELT)	Center (2 POINT BELT)	Outboard Right
Group 0 (0-9months)	up to 10kg	X	U*	U	U	UF	U
Group 0 + (0-2years)	up to 13kg	X	U*	U	U	UF	U
Group I (9months-4years)	9 to 18kg	X	U*	U	U	UF	U
Group II (15 to 25kg)	15 to 25kg	UF	U*	U	U	UF	U
Group III (22 to 36kg)	22 to 36kg	UF	U*	U	U	UF	U

U = Suitable for "universal" category Child Restraint Systems approved for use in this mass group

U* = Suitable for "universal" category Child Restraint Systems with seat height adjusted to the highest position

UF = Suitable for forward facing "universal" category restraints approved for use in this mass group

L = Suitable for particular child restraints given on attached list. These restraints may be of the "specific vehicle", "restricted" or "semi-universal" categories.

B = Built-in restraint approved for this mass group.

X = Seat position not suitable for children in this mass group.

i-Size Child Restraint Systems according to ECE regulations

Mass Group	Seating Position			
	Front Passenger	Second Row		
		Outboard Left	Center	Outboard Right
i-size Child Restraints Systems	X	i-U	X	i-U

i-U = Suitable for i-Size "universal" Child Restraints Systems forward and rearward facing

i-UF = Suitable for forward-facing i-Size "universal" Child Restraints Systems only.

X = Seat position not suitable for i-size CRS.

Recommended child restraint systems – For Europe

Mass Group	Name	Manufacturer	Type of Fixation	ECE-R44 Approval No.
Group 0+	Cabriofix & Familyfix	Maxi Cosi	Rearward-facing with ISOFIX	E4 04443907
Group I	Duo Plus	Britax Römer	Forward-facing with ISOFIX and top-tether	E1 04301133
Group II	KidFix II XP	Britax Römer	Forward-facing with ISOFIX and vehicle belt	E1 04301323
Group III	Junior III	Graco	Forward-facing with vehicle Belt	E11 03.44.164 E11 03.44.165

❋The Graco Junior III will be used without the backrest

CRS Manufacturer information

Maxi Cosi Cabriofix & Familyfix http://www.maxi-cosi.com

Britax Römmer http://www.britax.com

Graco http://www.gracobaby.com

AIR BAG - SUPPLEMENTAL RESTRAINT SYSTEM (IF EQUIPPED)

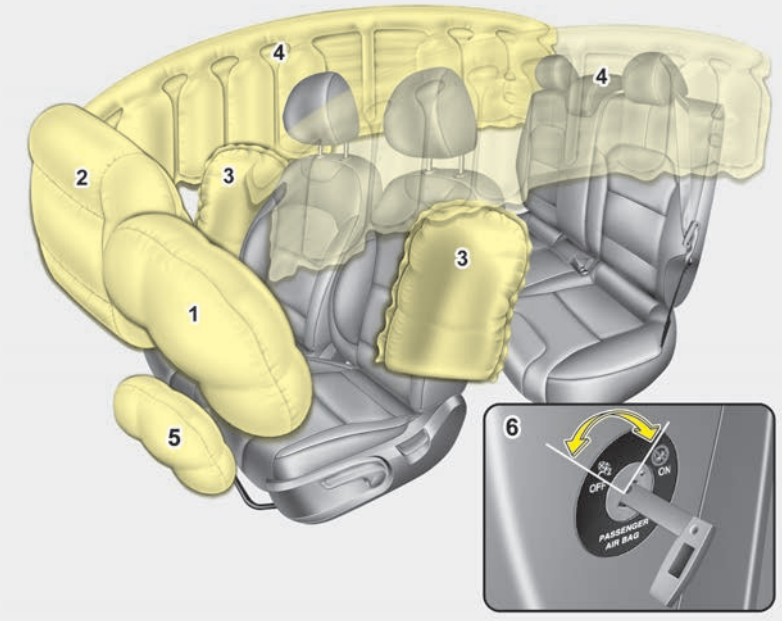

❊ The actual air bags in the vehicle may differ from the illustration.

ODE036036L

(1) Driver's front air bag
(2) Passenger's front air bag*
(3) Side air bag*
(4) Curtain air bag*
(5) Driver's knee air bag*
(6) Passenger's front air bag ON/OFF switch*

* : if equipped

⚠ WARNING

- **Even in vehicles with air bags, you and your passengers must always wear the safety belts provided in order to minimize the risk and severity of injury in the event of a collision or rollover.**
- **SRS and pretensioners contain explosive chemicals.**

  If scraping a vehicle without removing SRS and pretensioners from a vehicle, it may cause fire. Before scraping a vehicle, we recommend that you contact an authorized Kia dealer.
- **Keep the SRS parts and wirings away from water or any liquid. If the SRS components are inoperative due to exposure to water or liquids, it may cause fire or severe injury.**

How does the air bag system operate

- Air bags are activated (able to inflate if necessary) only when the ignition switch is turned to the ON or START position.
- Air bags inflate instantly in the event of a serious frontal collision or side collision (if equipped with a side air bag or curtain air bag) in order to help protect the occupants from serious physical injury.
- In normal conditions, the airbag is designed to deploy based on certain angle and intensity of the collision. These two factors are crucial elements for deciding whether to transmit airbag deployment signal or start the electrical operation or not.
- The airbag will deploy based on angle and intensity of the collision. It will not deploy in every crash or collision situations
- The front air bags will completely inflate and deflate in an instant.

  It is virtually impossible for you to see the air bags inflate during an accident.

  It is much more likely that you will simply see the deflated air bags hanging out of their storage compartments after the collision.

- In order to help provide protection in a severe collision, the air bags must inflate rapidly. The speed of the air bag inflation is a consequence of extremely short time in which a collision occurs and the need to inflate the air bag between the occupant and the vehicle structures before the occupant impacts those structures.

  This speed of inflation reduces the risk of serious or life-threatening injuries in a severe collision and is thus a necessary part of the air bag design.

  However, air bag inflation can also cause injuries which can include facial abrasions, bruises and broken bones because the inflation speed also causes the air bags to expand with a great deal of force.
- **There are even circumstances under which contact with the steering wheel air bag can cause fatal injuries, especially if the occupant is positioned excessively close to the steering wheel.**

⚠ WARNING

- **To avoid severe personal injury or death caused by deploying air bags in a collision, the driver should sit as far back from the steering wheel air bag as possible (at least 250 mm (10 inches) away). The front passengers should always move their seats as far back as possible and sit back in their seat.**
- **Air bags inflate instantly in the event of a collision, and passengers may be injured by the air bag expansion force if they are not in a proper position.**
- **Air bag inflation may cause injuries including facial or bodily abrasions, injuries from broken glasses or burns.**

Noise and smoke

When the air bags inflate, they make a loud noise and they leave smoke and powder in the air inside of the vehicle. This is normal and is a result of the ignition of the air bag inflator. After the air bag inflates, you may feel substantial discomfort in breathing due to the contact of your chest with both the seat belt and the air bag, as well as from breathing the smoke and powder. **Open your doors and/or windows as soon as possible after the impact in order to reduce discomfort and prevent prolonged exposure to smoke and powder.**

Though the smoke and powder are non-toxic, they may cause irritation to the skin (eyes, nose and throat, etc). If this is the case, wash and rinse with cold water immediately and consult a doctor if the symptom persists.

⚠ WARNING

When the air bags deploy, the air bag related parts in the steering wheel, instrument panel, front seats and/or in both sides of the roof rails above the front and rear doors are very hot. To prevent injury, do not touch the air bag storage area's internal components immediately after an air bag has inflated.

Front passenger's air bag warning label for child restraint system

■ Type A

OYDESA2042

■ Type B

OHM036053L

⚠ WARNING

Never place a rear facing child restraint in the front passenger seat, unless the passenger-side air bag is deactivated. An inflating passenger-side air bag could impact the rear-facing child restraint and kill the child.

In addition, we recommend that you do not place front-facing child restraints in the front passenger's seat either. If the front passenger air bag inflates, it could cause serious or fatal injuries to the child.

If your vehicle is equipped with the passenger's front air bag ON/OFF switch, you can activate or deactivate the front passenger's air bag when necessary.

For more details, please refer to "Passenger's front air bag ON/OFF switch" in this chapter. (if equipped)

⚠ WARNING

- **NEVER use a rearward facing child restraint on a seat protected by an ACTIVE AIR BAG in front of it, DEATH or SERIOUS INJURY to the CHILD can occur.**
- **When children are seated in the rear outboard seats of a vehicle equipped with side and/or curtain air bags, be sure to install the child restraint system as far away from the door side as possible, and securely lock the child restraint system in position.**

  Inflation of side and/or curtain air bags could cause serious injury or death to an infant or child.

Air bag warning light

The purpose of the air bag warning light in your instrument panel is to alert you of a potential problem with your air bag - Supplemental Restraint System (SRS).
When the ignition switch is turned ON, the warning light should illuminate for approximately 6 seconds, then go off.
Have the system checked if:

- The light does not turn on briefly when you turn the ignition ON.
- The light stays on after illuminating for approximately 6 seconds.
- The light comes on while the vehicle is in motion.
- The light blinks when the ignition switch is in ON position.

Passenger's front air bag ON indicator (if equipped)

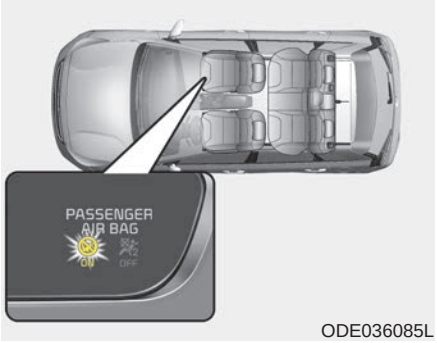

ODE036085L

The passenger's front air bag ON indicator illuminates for approximately 4 seconds after the ignition switch is turned to the ON position.

The passenger's front air bag ON indicator also comes on when the passenger's front air bag ON/OFF switch is set to the ON position and goes off after approximately 60 seconds.

Passenger's front air bag OFF indicator (if equipped)

ODE036086L

The passenger's front air bag OFF indicator illuminates for about 4 seconds after the ignition switch is turned to the ON position.

The passenger's front air bag OFF indicator also comes on when the passenger's front air bag ON/OFF switch is set to the OFF position and goes off when the passenger's front air bag ON/OFF switch is set to the ON position.

⚠ CAUTION

If the passenger's front air bag ON/OFF switch malfunctions, the passenger's front air bag OFF indicator will not illuminate (The passenger's front air bag ON indicator comes on and goes off after approximately 60 seconds) and the passenger's front air bag will inflate in a frontal impact even if the passenger's front air bag ON/OFF switch is set to the OFF position.

If this occurs, we recommend that the passenger's front air bag ON/OFF switch and the SRS air bag system be inspected by an authorized Kia dealer.

SRS components and functions

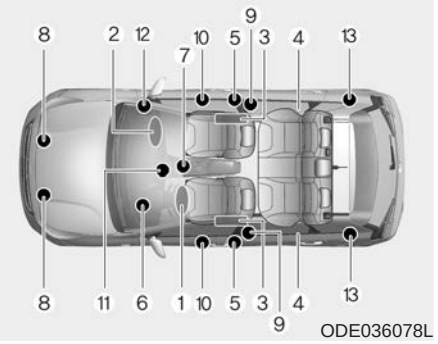

The SRS consists of the following components:

1. Driver's front air bag module
2. Passenger's front air bag module*
3. Side air bag modules*
4. Curtain air bag modules*
5. Retractor pre-tensioner assemblies*
6. Air bag warning light
7. SRS control module (SRSCM)
8. Front impact sensors
9. Side impact sensors*
10. Side pressure sensors*
11. Passenger's front air bag ON/OFF indicator (front passenger's seat only)*
12. Passenger's front air bag ON/OFF switch*
13. Retractor pre-tensioner assemblies*

* : if equipped

The SRSCM continually monitors all SRS components while the ignition switch is ON to determine if a crash impact is severe enough to require air bag deployment or pre-tensioner seat belt deployment.

The SRS air bag warning light on the instrument panel will illuminate for about 6 seconds after the ignition switch is turned to the ON position, after which the SRS air bag warning light should go out.

⚠ WARNING

If any of the following conditions occurs, this indicates a malfunction of the SRS. We recommend that the system be inspected by an authorized Kia dealer.

- **The light does not turn on briefly when you turn the ignition ON.**
- **The light stays on after illuminating for approximately 6 seconds.**
- **The light comes on while the vehicle is in motion.**
- **The light blinks when the ignition switch is in ON position.**

Driver's front air bag (1)

The front air bag modules are located both in the center of the steering wheel and in the front passenger's panel above the glove box. When the SRSCM detects a sufficiently severe impact to the front of the vehicle, it will automatically deploy the front air bags.

Driver's front air bag (2)

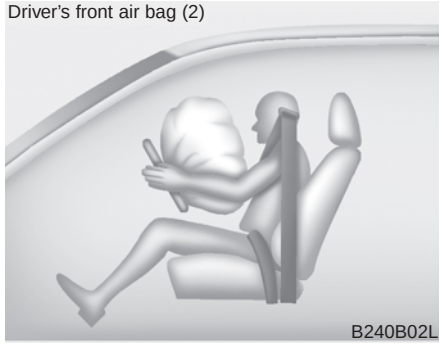

Upon deployment, tear seams molded directly into the pad covers will separate under pressure from the expansion of the air bags. Further opening of the covers then allows full inflation of the air bags.

Driver's front air bag (3)

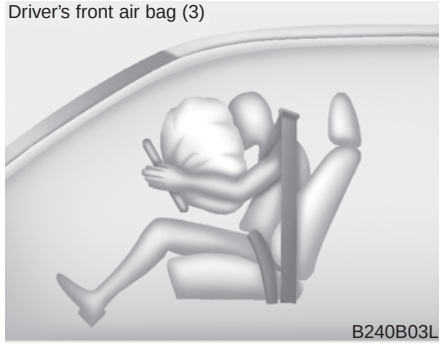

A fully inflated air bag, in combination with a properly worn seat belt, slows the driver's or the passenger's forward motion, reducing the risk of head and chest injury.

After complete inflation, the air bag immediately starts deflating, enabling the driver to maintain forward visibility and the ability to steer or operate other controls.

Passenger's front air bag (if equipped)

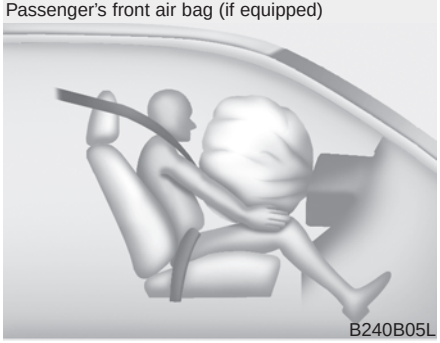

⚠ WARNING

- **Do not install or place any accessories (drink holder, cassette holder, sticker, etc.) on the front passenger's panel above the glove box in a vehicle with a passenger's air bag. Such objects may become dangerous projectiles and cause injury if the passenger's air bag inflates.**

(Continued)

(Continued)

- **When installing a container of liquid air freshener inside the vehicle, do not place it near the instrument cluster nor on the instrument panel surface.**

  It may become a dangerous projectile and cause injury if the passenger's air bag inflates.

⚠ WARNING

- **If an air bag deploys, there may be a loud noise followed by a fine dust released in the vehicle. These conditions are normal and are not hazardous - the air bags are packed in this fine powder. The dust generated during air bag deployment may cause skin or eye irritation as well as aggravate asthma for some persons. Always wash all exposed skin areas thoroughly with cold water and mild soap after an accident in which the air bags were deployed.**

(Continued)

(Continued)

- **The SRS can function only when the ignition key is in the ON position. If the SRS air bag warning light does not illuminate, or continuously remains on after illuminating for about 6 seconds when the ignition key is turned to the ON position, or after the engine is started, comes on while driving, the SRS is not working properly. If this occurs, we recommend that the system be inspected by an authorized Kia dealer.**
- **Before you replace a fuse or disconnect a battery terminal, turn the ignition switch to the LOCK position and remove the ignition key. Never remove or replace the air bag related fuse(s) when the ignition switch is in the ON position. Failure to heed this warning will cause the SRS air bag warning light to illuminate.**

Driver's and passenger's front air bag

■ Driver's front air bag

ODE036037

■ Driver's knee air bag (if equipped)

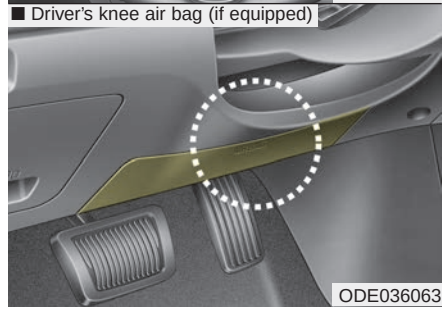

ODE036063

■ Passenger's front air bag (if equipped)

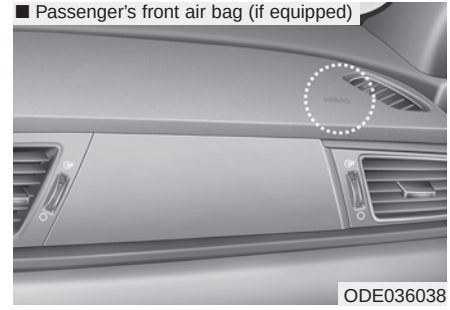

ODE036038

Your vehicle is equipped with a Supplemental Restraint (Air Bag) System and lap/shoulder belts at both the driver and passenger seating positions.

The indicators of the system's presence are the letters "AIR BAG" located on the air bag pad cover on the steering wheel and the passenger's side front panel pad above the glove box.

The SRS consists of air bags installed under the pad covers in the center of the steering wheel and the passenger's side in the front panel above the glove box.

The purpose of the SRS is to provide the vehicle's driver and/or the front passenger with additional protection than that offered by the seat belt system alone in case of a frontal impact of sufficient severity.

⚠ WARNING

Always use seat belts and child restraints – every trip, every time, everyone! Air bags inflate with considerable force and in the blink of an eye. Seat belts help keep occupants in proper position to obtain maximum benefit from the air bag. Even with air bags, improperly and unbelted occupants can be severely injured when the air bag inflates. Always follow the precautions about seat belts, air bags and occupant safety contained in this manual.

To reduce the chance of serious or fatal injuries and receive the maximum safety benefit from your restraint system:

(Continued)

(Continued)

- **ABC – We recommend to always Buckle Children in the 2nd row seat. It is the safest place for children of any age to ride.**
- **Front and side air bags can injure occupants improperly positioned in the front seats.**
- **Move your seat as far back as practical from the front air bags, while still maintaining control of the vehicle.**
- **You and your passengers should never sit or lean unnecessarily close to the air bags. Improperly positioned drivers and passengers can be severely injured by inflating air bags.**
- **Never lean against the door or center console – always sit in an upright position.**

(Continued)

(Continued)

- Do not allow a passenger to ride in the front seat when the passenger's front air bag OFF indicator is illuminated, because the air bag will not deploy in the event of a moderate or severe frontal crash.
- No objects should be placed over or near the air bag modules on the steering wheel, instrument panel or the front passenger's panel above the glove box, because any such object could cause harm if the vehicle is in a crash severe enough to cause the air bags to deploy.
- Do not tamper with or disconnect SRS wiring or other components of the SRS system. Doing so could result in injury, due to accidental deployment of the air bags or by rendering the SRS inoperative.

(Continued)

(Continued)

- If the SRS air bag warning light remains illuminated while the vehicle is being driven, we recommend that the system be inspected by an authorized Kia dealer.
- Air bags can only be used once – we recommend that the system be replaced by an authorized Kia dealer.
- The SRS is designed to deploy the front air bags when an impact is sufficiently severe. Additionally, the air bags will only deploy once. Seat belts must be worn at all times.
- Front air bags are not intended to deploy in side-impact, rear-impact or rollover crashes. However, when frontal deployment threshold is satisfied at side-impact, front air bags may deploy.

  In addition, front air bags will not deploy in frontal crashes below the deployment threshold.

(Continued)

(Continued)

- A child restraint system should never be placed in the front seat. The infant or child could be severely injured or killed by an air bag deployment in case of an accident.
- Children age 12 and under must always be properly restrained in the rear seat. If a child over 12 must be seated in the front seat, he or she must be properly belted and the seat should be moved as far back as possible.
- For maximum safety protection in all types of crashes, all occupants including the driver should always wear their seat belts whether or not an air bag is also provided at their seating position to minimize the risk of severe injury or death in the event of a crash.

  Do not sit or lean unnecessarily close to the air bag while the vehicle is in motion.

(Continued)

(Continued)

- **Sitting improperly or out of position can result in serious or fatal injury in a crash. All occupants should sit upright with the seat back in an upright position, centered on the seat cushion with their seat belt on, legs comfortably extended and their feet on the floor until the vehicle is parked and the ignition key is removed.**
- **The SRS air bag system must deploy very rapidly to provide protection in a crash. If an occupant is out of position because of not wearing a seat belt, the air bag may forcefully contact the occupant causing serious or fatal injuries.**

Passenger's front air bag ON/OFF switch (if equipped)

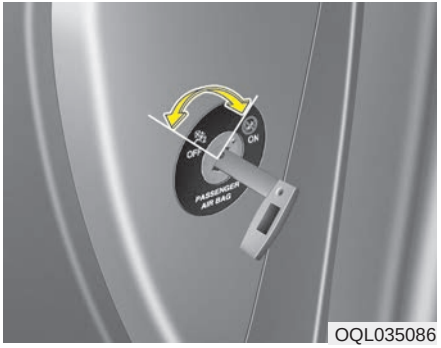

OQL035086

The passenger's front air bag can be deactivated by the passenger's front air bag ON/OFF switch if a child restraint is installed on the front passenger's seat or if the front passenger's seat is unoccupied by a person.

To ensure the safety of your child, the passenger's front air bag must be deactivated when it should be necessary to install a rearward facing child seat on the front passenger seat in exceptional circumstances.

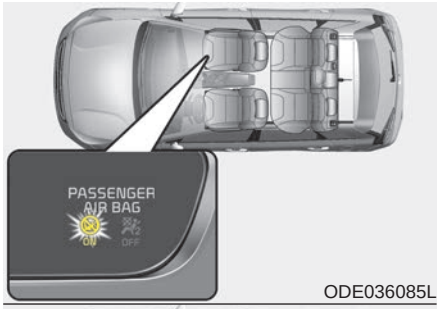

ODE036085L

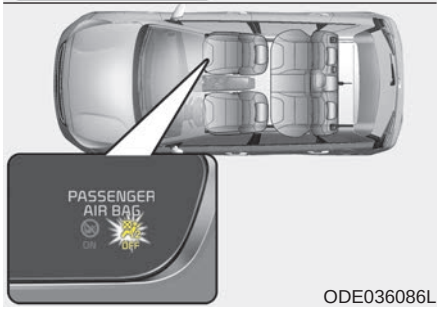

ODE036086L

To deactivate or reactivate the passenger's front air bag:

To deactivate the passenger's front air bag, insert the master key into the passenger's front air bag ON/OFF switch and turn it to the OFF position.

The passenger's front air bag OFF indicator will illuminate and stay on until the passenger's front air bag is reactivated.

To reactivate the passenger's front air bag, insert the master key into the passenger's front air bag ON/OFF switch and turn it to the ON position. The passenger's front air bag OFF indicator will go out.

⚠ WARNING

The front air bag ON/OFF switch could turn by using a similar small rigid device. Always check the status of the front air bag ON/OFF switch and passenger's front air bag OFF indicator.

✻ NOTICE

- **When the passenger's front air bag ON/OFF switch is set to the ON position, the passenger's front air bag is activated and child or infant seat should not be installed on the front passenger seat.**
- **When the passenger's front air bag ON/OFF switch is set to the OFF position, the passenger's front air bag is deactivated.**

⚠ CAUTION

- ***If the passenger's front air bag ON/OFF switch is not working properly, the air bag warning light ( )on the instrument panel will illuminate.***

(Continued)

(Continued)

And, the passenger's front air bag OFF indicator ( ) will not illuminate (The passenger's front air bag ON indicator comes on and goes off after approximately 60 seconds), the SRS Control Module reactivates the passenger's front air bag and the passenger's front air bag will inflate in frontal impact crashes even if the passenger's front air bag ON/OFF switch is set to the OFF position.

If this occurs, we recommend that the system be inspected by an authorized Kia dealer.

- ***If the SRS air bag warning light blinks or does not illuminate when the ignition switch is turned to the ON position, or if it illuminates while the vehicle is being driven, we recommend that the system be inspected by an authorized Kia dealer.***

⚠ WARNING

- **The driver is responsible for the proper position of the passenger's front air bag ON/OFF switch.**
- **Deactivate the passenger's front air bag only when the ignition switch is switched off, or the malfunction may occur in the SRS Control Module. And there may be a danger that the driver's and/or front passenger's and/or side and curtain air bag may fail to trigger, or not trigger correctly during a collision.**
- **Never install a rearward facing child seat on the front passenger's seat unless the passenger's front air bag has been deactivated. The infant or child could be severely injured or killed by an air bag deployment in case of an accident.**

(Continued)

(Continued)

- **Children who are too large for child restraint systems should always occupy the rear seat and use the available lap/shoulder belts. Children are afforded the most safety in the event of an accident when they are restrained by a proper restraint system in the rear seat.**
- **As soon as the child seat is no longer needed on the front passenger's seat, reactivate the front passenger's air bag.**

⚠ WARNING - No attaching objects

No objects (such as crash pad cover, cellular phone holder, cup holder, perfume or stickers) should be placed over or near the air bag modules on the steering wheel, instrument panel, windshield glass, and the front passenger's panel above the glove box. Such objects could cause harm if the vehicle is in a crash severe enough to cause the air bags to deploy. Do not place any objects over the air bag or between the air bag and yourself.

Side air bag (if equipped)

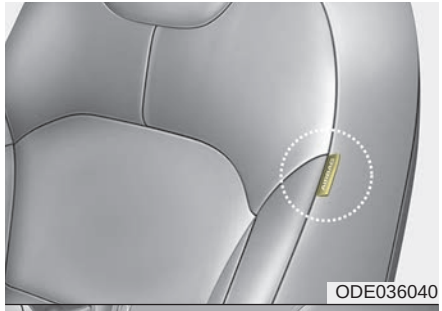

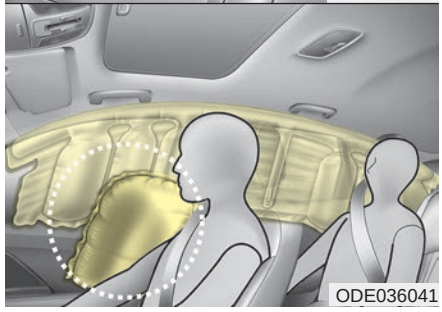

❊ The actual air bags in the vehicle may differ from the illustration.

Your vehicle is equipped with a side air bag in each front seat.

The purpose of the air bag is to provide the vehicle's driver and/or the front passenger with additional protection than that offered by the seat belt alone.

The side air bags are designed to deploy during certain side-impact collisions, depending on the crash severity of impact. However, when side deployment threshold is satisfied at front-impact, side air bags may deploy. The side air bags are not designed to deploy in all side impact situations.

The side air bags may deploy on the side of the impact.

⚠ WARNING

Do not allow the passengers to lean their heads or bodies onto doors, put their arms on the doors, stretch their arms out of the window, or place objects between the doors and passengers when they are seated on seats equipped with side and/or curtain air bags.

⚠ WARNING

- **The side air bag is supplemental to the driver's and the passenger's seat belt systems and is not a substitute for them. Therefore your seat belts must be worn at all times while the vehicle is in motion. The air bags deploy only in certain side impact conditions severe enough to cause significant injury to the vehicle occupants.**

(Continued)

(Continued)

- **For best protection from the side air bag system and to avoid being injured by the deploying side air bag, both front seat occupants should sit in an upright position with the seat belt properly fastened. The driver's hands should be placed on the steering wheel at the 9:00 and 3:00 positions.**

  The passenger's arms and hands should be placed on their laps.
- **Do not use any accessory seat covers.**
- **Use of seat covers could reduce or prevent the effectiveness of the system.**
- **To prevent unexpected deployment of the side air bag that may result in personal injury, avoid impact to the side impact sensor when the ignition switch is on.**

(Continued)

(Continued)

- **If the seat or seat cover is damaged, we recommend that the system be serviced by an authorized Kia dealer.**

⚠ WARNING - No attaching objects

- **Do not place any objects over the air bag or between the air bag and yourself. Also, do not attach any objects around the area the air bag inflates such as the door, side door glass, front and rear pillar.**
- **Do not place any objects between the door and the seat. They may become dangerous projectiles if the side air bag inflates.**
- **Do not install any accessories on the side or near the side air bags.**

Curtain air bag (if equipped)

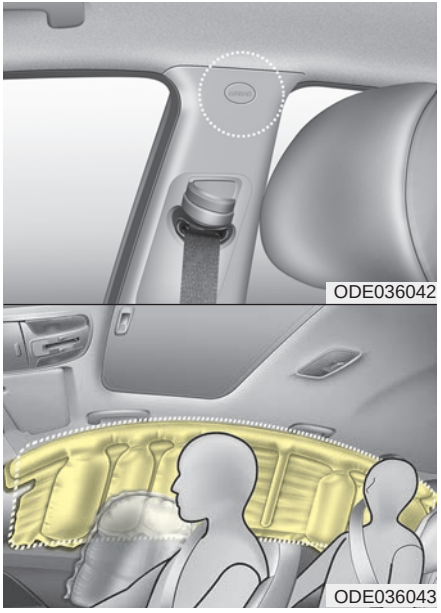

❊ The actual air bags in the vehicle may differ from the illustration.

Curtain air bags are located along both sides of the roof rails above the front and rear doors.

They are designed to help protect the heads of the front seat occupants and the rear outboard seat occupants in certain side impact collisions.

The curtain air bags are designed to deploy during certain side impact collisions, depending on the crash severity of impact. However, when side deployment threshold is satisfied at front-impact, curtain air bags may deploy.

The curtain air bags may deploy on the side of the impact.

The curtain air bags are not designed to deploy in all side impacts situations.

⚠ WARNING

- **In order for side and curtain air bags to provide the best protection, front seat occupants and outboard rear occupants should sit in an upright position with the seat belts properly fastened. Importantly, children should sit in a proper child restraint system in the rear seat.**

(Continued)

(Continued)

- **When children are seated in the rear outboard seats, they must be seated in the proper child restraint system. Make sure to position the child restraint system as far away from the door side as possible, and secure the child restraint system in a locked position.**
- **Do not allow the passengers to lean their heads or bodies against doors, put their arms on the doors, stretch their arms out of the window or place objects between the doors and passengers when they are seated on seats equipped with side and curtain air bags.**
- **Never try to open or repair any components of the side curtain air bag system. We recommend that the system be serviced by an authorized Kia dealer.**

Failure to follow the above instructions can result in injury or death to the vehicle occupants in an accident.

⚠ WARNING - No attaching objects

- **Do not place any objects over the air bag. Also, do not attach any objects around the area the air bag inflates such as the door, side door glass, front and rear pillar, roof side rail.**
- **Do not hang hard or breakable objects on the clothes hanger.**

Why didn't my air bag go off in a collision? (Inflation and non-inflation conditions of the air bag)

There are many types of accidents in which the air bag would not be expected to provide additional protection.

These include rear impacts, second or third collisions in multiple impact accidents, as well as low speed impacts.

Air bag collision sensors

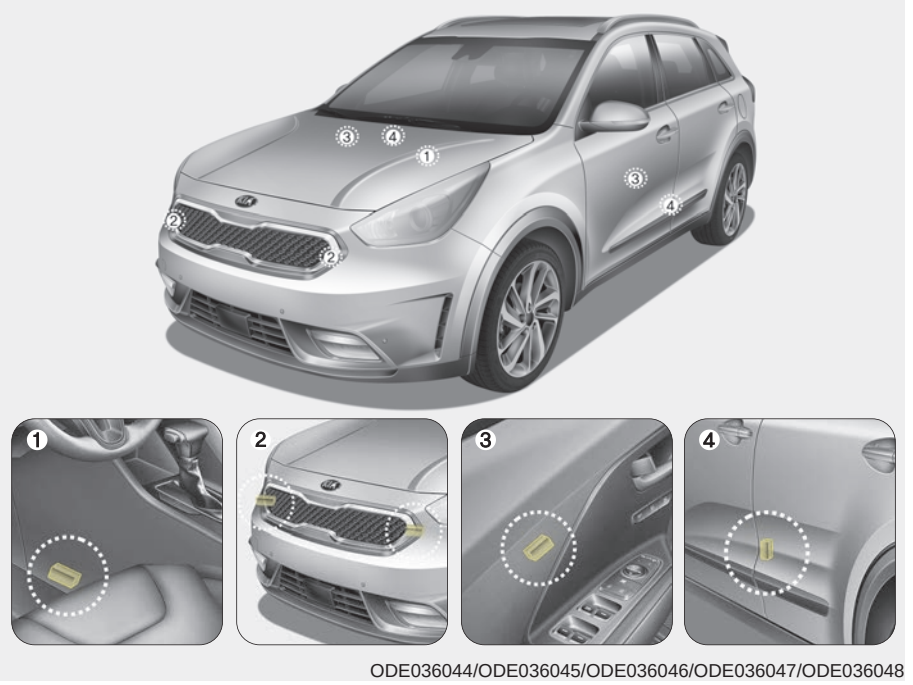

ODE036044/ODE036045/ODE036046/ODE036047/ODE036048

(1) SRS control module
(2) Front impact sensor
(3) Side pressure sensor (if equipped)
(4) Side impact sensor (if equipped)

❊ The actual air bag collision sensors in the vehicle may differ from the illustration.

⚠ WARNING

- **Do not hit or allow any objects to impact the locations where air bag or sensors are installed.**

  This may cause unexpected air bag deployment, which could result in serious personal injury or death.
- **If the installation location or angle of the sensors is altered in any way, the air bags may deploy when they should not or they may not deploy when they should, causing severe injury or death.**

  Therefore, do not try to perform maintenance on or around the air bag sensors. We recommend that the system be serviced by an authorized Kia dealer.

(Continued)

(Continued)

- **Problems may arise if the sensor installation angles are changed due to the deformation of the front bumper, body or front door and B/C pillars where side collision sensors are installed. We recommend that the system be serviced by an authorized Kia dealer.**
- **Your vehicle has been designed to absorb impact and deploy the air bag(s) in certain collisions. Installing bumper guards or replacing a bumper with non-genuine parts may adversely affect your vehicles collision and air bag deployment performance.**

Air bag inflation conditions

Front air bags

Front air bags are designed to inflate in a frontal collision depending on the severity of impact of the front collision.

Side and curtain air bags (if equipped)

Side and curtain air bags are designed to inflate when an impact is detected by side collision sensors depending on the severity of impact resulting from a side impact collision.

Although the front air bags (driver's and front passenger's air bags) are designed to inflate only in frontal collisions, they also may inflate in other types of collisions if the front impact sensors detect a sufficient impact. Side air bags (side and/or curtain air bags) are designed to inflate only in side impact collisions, but they may inflate in other collisions if the side impact sensors detect a sufficient impact.

If the vehicle chassis is impacted by bumps or objects on unimproved roads or sidewalks, air bags may deploy. Drive carefully on unimproved roads or on surfaces not designed for vehicle traffic to prevent unintended air bag deployment.

Air bag non-inflation conditions

- In certain low-speed collisions the air bags may not deploy. The air bags are designed not to deploy in such cases because they may not provide benefits beyond the protection of the seat belts in such collisions.
- Air bags are not designed to inflate in rear collisions, because occupants are moved backward by the force of the impact. In this case, inflated air bags would not be able to provide any additional benefit.
- Front air bags may not inflate in side impact collisions, because occupants move to the direction of the collision, and thus in side impacts, front air bag deployment would not provide additional occupant protection.
- However, if equipped with side and curtain air bags, the air bags may inflate depending on the severity of impact.
- In an angled collision, the force of impact may direct the occupants in a direction where the air bags would not be able to provide any additional benefit, and thus the sensors may not deploy any air bags.
- Just before impact, drivers often brake heavily. Such heavy braking lowers the front portion of the vehicle causing it to “ride” under a vehicle with a higher ground clearance. Air bags may not inflate in this "under-ride" situation because deceleration forces that are detected by sensors may be significantly reduced by such “under-ride” collisions.
- Front air bags may not inflate in rollover accidents because front air bag deployment would not provide additional occupant protection.
- Air bags may not inflate if the vehicle collides with objects such as utility poles or trees, where the point of impact is concentrated to one area and the full force of the impact is not delivered to the sensors.

SRS Care

The SRS is virtually maintenance-free and so there are no parts you can safely service by yourself. If the SRS air bag warning light does not illuminate, or continuously remains on, we recommend that the system be inspected by an authorized Kia dealer.

⚠ WARNING

- **Modification to SRS components or wiring, including the addition of any kind of badges to the pad covers or modifications to the body structure, can adversely affect SRS performance and lead to possible injury.**
- **For cleaning the air bag pad covers, use only a soft, dry cloth or one which has been moistened with plain water. Solvents or cleaners could adversely affect the air bag covers and proper deployment of the system.**

(Continued)

(Continued)

- **No objects should be placed over or near the air bag modules on the steering wheel, instrument panel, and the front passenger's panel above the glove box, because any such object could cause harm if the vehicle is in a crash severe enough to cause the air bags to inflate.**
- **If the air bags inflate, we recommend that the system be replaced by an authorized Kia dealer.**
- **Do not tamper with or disconnect SRS wiring, or other components of the SRS system. Doing so could result in injury, due to accidental inflation of the air bags or by rendering the SRS inoperative.**

(Continued)

(Continued)

- **If components of the air bag system must be discarded, or if the vehicle must be scrapped, certain safety precautions must be observed. An authorized Kia dealer knows these precautions and can give you the necessary information. Failure to follow these precautions and procedures could increase the risk of personal injury.**
- **If your car was flooded and has soaked carpeting or water on flooring, you shouldn't try to start the engine; we recommend that you contact an authorized Kia dealer.**

Additional safety precautions

- **Never let passengers ride in the cargo area or on top of a folded-down back seat.** All occupants should sit upright, fully back in their seats with their seat belts on and their feet on the floor.
- **Passengers should not move out of or change seats while the vehicle is moving.** A passenger who is not wearing a seat belt during a crash or emergency stop can be thrown against the inside of the vehicle, against other occupants, or out of the vehicle.
- **Each seat belt is designed to restrain one occupant.** If more than one person uses the same seat belt, they could be seriously injured or killed in a collision.
- **Do not use any accessories on seat belts.** Devices claiming to improve occupant comfort or reposition the seat belt can reduce the protection provided by the seat belt and increase the chance of serious injury in a crash.
- **Passengers should not place hard or sharp objects between themselves and the air bags.** Carrying hard or sharp objects on your lap or in your mouth can result in injuries if an air bag inflates.
- **Keep occupants away from the air bag covers.** All occupants should sit upright, fully back in their seats with their seat belts on and their feet on the floor. If occupants are too close to the air bag covers, they could be injured if the air bags inflate.
- **Do not attach or place objects on or near the air bag covers.** Any object attached to or placed on the front or side air bag covers could interfere with the proper operation of the air bags.
- **Do not modify the front seats.** Modification of the front seats could interfere with the operation of the supplemental restraint system sensing components or side air bags.
- **Do not place items under the front seats.** Placing items under the front seats could interfere with the operation of the supplemental restraint system sensing components and wiring harnesses.
- **Never hold an infant or child on your lap.** The infant or child could be seriously injured or killed in the event of a crash. All infants and children should be properly restrained in appropriate child safety seats or seat belts in the rear seat.

⚠ WARNING

- **Sitting improperly or out of position can cause occupants to be shifted too close to a deploying air bag, strike the interior structure or be thrown from the vehicle resulting in serious injury or death.**
- **Always sit upright with the seatback in an upright position, centered on the seat cushion with your seat belt on, legs comfortably extended and your feet on the floor.**

Adding equipment to or modifying your air bag-equipped vehicle

If you modify your vehicle by changing your vehicle's frame, bumper system, front end or side sheet metal or ride height, this may affect the operation of your vehicle's air bag system.

Air bag warning label

ODE036069L

Air bag warning labels are attached to alert the passengers of the potential risk of the air bag system.

Note that these government warnings focus on the risk of children. We also want you to be aware of the risks which adults are exposed to that have been described in previous pages.

Features of your vehicle

Keys 4-4
- Record your key number 4-4
- Key operations 4-4
- Immobilizer system 4-5

Remote keyless entry 4-7
- Remote keyless entry system operations 4-7
- Smart key system operation 4-8
- Transmitter precautions 4-9
- Battery replacement 4-10

Theft-alarm system 4-12
- Armed stage 4-12
- Theft-alarm stage 4-13
- Disarmed stage 4-14

Door locks 4-15
- Operating door locks from outside the vehicle 4-15
- Operating door locks from inside the vehicle 4-16
- Door lock/unlock features 4-18
- Child-protector rear door locks 4-18

Tailgate 4-19
- Opening the tailgate 4-19
- Closing the tailgate 4-20
- Emergency tailgate safety release 4-21

Windows 4-22
- Power windows 4-23

Hood 4-28
- Opening the hood 4-28
- Hood open warning 4-29
- Closing the hood 4-29

Fuel filler lid 4-30
- Opening the fuel filler lid 4-30
- Closing the fuel filler lid 4-30

Sunroof 4-33
- Sliding the sunroof 4-34
- Tilting the sunroof 4-35
- Sunshade 4-36
- Resetting the sunroof 4-36
- Sunroof open warning 4-37

Steering wheel 4-38
- Electronic power steering 4-38
- Tilt & telescopic steering 4-39
- Heated steering wheel 4-39
- Horn 4-40

Mirrors 4-41
- Inside rearview mirror 4-41
- Outside rearview mirror 4-42

Instrument cluster 4-46
- Instrument cluster control 4-47
- LCD window control 4-48

• Gauges 4-48
• Dual clutch transmission shift indicator 4-52
• Dual clutch transmission shift indicator in sports mode (for Europe) 4-53

LCD windows 4-54
• Over view 4-54
• Trip information (Trip computer) 4-54
• Energy flow 4-58
• LCD modes 4-60

Warning and indicator lights 4-74
• Warning lights 4-74
• Indicator lights 4-82

Rear parking assist system 4-87
• Operation of the rear parking assist system 4-87
• Non-operational conditions of rear parking assist system 4-88
• Rear parking assist system precautions 4-89
• Self-diagnosis 4-90

Parking assist system 4-91
• Operation of the parking assist system 4-91
• Non-operational conditions of parking assist system 4-93
• Self-diagnosis 4-95

Rearview camera 4-96

Lighting 4-97
• Battery saver function 4-97
• Headlight escort function 4-97
• Daytime running light 4-98
• Lighting control 4-98
• High beam operation 4-100
• Turn signals and lane change signals 4-101
• Front fog light 4-102
• Rear fog light 4-102
• Headlight leveling device 4-103

Wipers and washers 4-104
• Windshield wiper/washer 4-104
• Rear window wiper/washer 4-104
• Windshield wipers 4-105
• Windshield washers 4-107
• Rear window wiper and washer switch 4-108

Interior light 4-109
• Automatic turn off function 4-109
• Map lamp 4-109
• Room lamp 4-110
• Tailgate room lamp 4-111
• Vanity mirror lamp 4-111

Welcome system 4-112
• Welcome light 4-112
• Escort welcome 4-112

• Interior light 4-112
Defroster 4-113
• Rear window defroster 4-113
Climate control system. 4-114
• System operation 4-114
• Air conditioning 4-115
• Climate control air filter 4-116
• Air conditioning refrigerant label 4-117
• Checking the amount of air conditioner refrigerant and compressor lubricant 4-118
• Automatic climate control system 4-119
• Automatic heating and air conditioning 4-120
• Automatic ventilation 4-128
• Sunroof inside air recirculation 4-128
Windshield defrosting and defogging. 4-129
• Automatic climate control system 4-129
• Operation tips 4-130
• Defogging logic. 4-130
• Auto defogging system 4-131
Clean air 4-132
Storage compartment. 4-133
• Center console storage 4-133
• Glove box 4-133
• Sunglass holder 4-134
• Luggage box 4-135
Interior features 4-136
• Ashtray 4-136
• Cup holder 4-136
• Sunvisor 4-137
• Seat warmer 4-138
• Air ventilation seat 4-140
• Power outlet 4-140
• USB charger. 4-141
• AC inverter 4-142
• Wireless smart phone charging system. 4-143
• Coat hook 4-146
• Floor mat anchor(s). 4-147
• Luggage net holder 4-147
• Cargo security screen 4-148
Exterior features. 4-149
• Roof rack 4-149

KEYS

Record your key number

The key code number is stamped on the key code tag attached to the key set. Should you lose your keys, we recommend that you contact an authorized Kia dealer. Remove the key code tag and store it in a safe place. Also, record the key code number and keep it in a safe place (not in the vehicle).

Key operations

■ Folding key

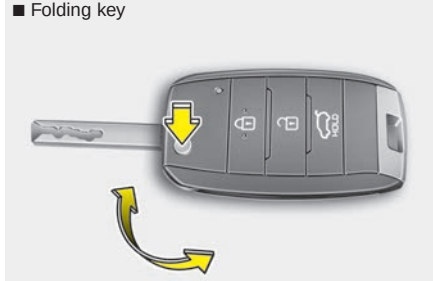

ODE046037L

■ Smart Key

ODE046038L

- Used to start the engine.
- Used to lock and unlock the doors.

Folding key

To unfold the key, press the release button then the key will unfold automatically.

To fold the key, fold the key manually while pressing the release button.

⚠ CAUTION

Do not fold the key without pressing the release button. This may damage the key.

Smart key

To remove the mechanical key, press and hold the release button (1) and remove the mechanical key (2).

To reinstall the mechanical key, put the key into the hole and push it until a click sound is heard.

⚠ WARNING - Ignition key (smart key)

Leaving children unattended in a vehicle with the ignition key (smart key) is dangerous even if the key is not in the ignition or start button is ACC or ON position. Children copy adults and they could place the key in the ignition or press the start button. The ignition key (smart key) would enable children to operate power windows or other controls, or even make the vehicle move, which could result in serious bodily injury or even death. Never leave the keys in your vehicle with unsupervised children, when the engine is running.

⚠ WARNING

We recommend that you use parts for replacement from an authorized Kia dealer. If an aftermarket key is used, the ignition switch may not return to ON after START. If this happens, the starter will continue to operate causing damage to the starter motor and possible fire due to excessive current in the wiring.

Immobilizer system

Your vehicle is equipped with an electronic engine immobilizer system to reduce the risk of unauthorized vehicle use.

Your immobilizer system is comprised of a small transponder in the ignition key and electronic devices inside the vehicle.

With the immobilizer system, whenever you insert your ignition key into the ignition switch and turn it to ON or Whenever the engine start/stop button is changed to the ON position, it checks and determines and verifies if the ignition key is valid or not.

If the key is determined to be valid, the engine will start.

If the key is determined to be invalid, the engine will not start.

To activate the immobilizer system:

Turn the ignition key to the OFF position or change the engine start/stop button to the OFF position. The immobilizer system activates automatically. Without a valid ignition key for your vehicle, the engine will not start.

To deactivate the immobilizer system:

Insert the ignition key into the key cylinder and turn it to the ON position or change the engine start/stop button to the ON position.

⚠ WARNING

In order to prevent theft of your vehicle, do not leave spare keys anywhere in your vehicle. Your immobilizer password is a customer unique password and should be kept confidential. Do not leave this number anywhere in your vehicle.

✻ NOTICE

When starting the engine, do not use the key with other immobilizer keys around. Otherwise the engine may not start or may stop soon after it starts. Keep each key separately in order to avoid a starting malfunction.

⚠ CAUTION

Do not put metal accessories near the ignition switch. Metal accessories may interrupt the transponder signal and may prevent the engine from being started.

✻ NOTICE

If you need additional keys or lose your keys, we recommend that you consult an authorized Kia dealer.

⚠ CAUTION

The transponder in your ignition key is an important part of the immobilizer system. It is designed to give years of trouble-free service, however you should avoid exposure to moisture, static electricity and rough handling. Immobilizer system malfunction could occur.

⚠ CAUTION

Do not change, alter or adjust the immobilizer system because it could cause the immobilizer system to malfunction. We recommend that the system be serviced by an authorized Kia dealer.

Malfunctions caused by improper alterations, adjustments or modifications to the immobilizer system are not covered by your vehicle manufacturer warranty.

REMOTE KEYLESS ENTRY

Remote keyless entry system operations

■ Folding key

OUM046432L

■ Smart Key

OUM046433L

Lock (1)

All doors (and tailgate) are locked if the lock button is pressed.

If all doors (and tailgate) are closed, the hazard warning lights will blink once to indicate that all doors (and tailgate) are locked.

Unlock (2)

All doors (and tailgate) are unlocked if the unlock button is pressed.

The hazard warning lights will blink twice to indicate that all doors (and tailgate) are unlocked.

However, after pressing this button, the doors (and tailgate) will lock automatically unless you open any door within 30 seconds.

Tailgate unlock (3)

The tailgate is unlocked if the button is pressed for more than 1 second.

The hazard warning lights will blink twice to indicate that the tailgate is unlocked.

However, after pressing this button, the tailgate will lock automatically unless you open the tailgate within 30 seconds.

Also, once the tailgate is opened and then closed, the tailgate will lock automatically.

Smart key system operation (if equipped)

OXM043002

With a smart key, you can lock or unlock a door (and tailgate) and even start the engine without inserting the key.

The functions of the buttons on a smart key are similar to the remote keyless entry. (Refer to the “Remote keyless entry” in this chapter.)

Carrying the smart key, you may lock and unlock the vehicle doors (and tailgate). Also, you may start the engine. Refer to the following, for more details.

Locking

ODE046001

Pressing the button of the front outside door handles with all doors (and tailgate) closed and any door unlocked, locks all the doors (and tailgate). The hazard warning lights will blink once to indicate that all doors (and tailgate) are locked. The button will only operate when the smart key is within 0.7 ~ 1m (28 ~ 39.3 in) from the outside door handle. If you want to make sure that a door has locked or not, you should check the door lock button inside the vehicle or pull the outside door handle.

Even though you press the button, the doors will not lock and the chime sounds if any of the following occurs:

- The smart key is in the vehicle.
- The ENGINE START/STOP button is in the ACC or ON position.
- Any door except the tailgate is opened.

Unlocking

Pressing the button of the front outside door handles with all doors (and tailgate) closed and locked, unlocks all the doors (and tailgate). The hazard warning lights will blink twice to indicate that all doors (and tailgate) are unlocked. The button will only operate when the smart key is within 0.7 ~ 1m (28 ~ 39.3 in) from the outside door handle.

When the smart key is recognized in the area of 0.7 ~ 1m (28 ~ 39.3 in) from the front outside door handle, other people can also open a door without possession of the smart key.

Tailgate unlocking

If you are within 0.7 ~ 1m (28 ~ 39.3 in) from the outside tailgate handle, with your smart key in possession, the tailgate will unlock and open when you press the tailgate handle switch.

The hazard warning lights will blink twice to indicate that the tailgate is unlocked.

Also, once the tailgate is opened and then closed, the tailgate will lock automatically.

Start-up

You can start the engine without inserting the key. For detailed information refer to “Starting the engine with a smart key” in chapter 6.

Transmitter precautions

The transmitter will not work if any of the following occurs:

- The ignition key is in the ignition switch. (for folding key)
- Another vehicle’s smart key is being operated close to your vehicle.
- You exceed the operating distance limit (about 10 m [30 feet]).
- The battery in the transmitter is weak.
- Other vehicles or objects may be blocking the signal.
- The weather is extremely cold.
- The transmitter is close to a radio transmitter such as a radio station or an airport which can interfere with normal operation of the transmitter.
- If the transmitter is in close proximity to your cell phone or smart phone, the signal from the transmitter could be blocked by normal operation of your cell phone or smart phone. This is especially important when the phone is active such as making call, receiving calls, text messaging, and/or sending/ receiving emails.

Avoid placing the transmitter and your cell phone or smart phone in the same pants or jacket pocket and maintain adequate distance between the two devices.

When the transmitter does not work correctly, open and close the door with the mechanical key. If you have a problem with the transmitter, we recommend that you contact an authorized Kia dealer.

⚠ CAUTION

Keep the transmitter away from water or any liquid. If the keyless entry system is inoperative due to exposure to water or other liquids, it will not be covered by your manufacturer's vehicle warranty.

⚠ CAUTION

Changes or modifications not expressly approved by the party responsible for compliance could void the user's authority to operate the equipment. If the keyless entry system is inoperative due to changes or modifications not expressly approved by the party responsible for compliance, it will not be covered by your manufacturer's vehicle warranty.

Battery replacement

■ Folding key

OYDDCO2005

■ Smart Key

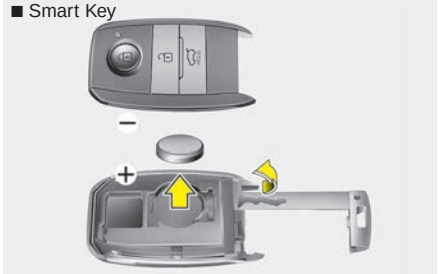

ODE046039L

A transmitter uses a 3 volt lithium battery which will normally last for several years. When replacement is necessary, use the following procedure.

1. Insert a slim tool into the slot and gently pry open the folding key center cover or Pry open the rear cover of the smart key.
2. Replace the battery with a new battery (CR2032). When replacing the battery, make sure the battery position.
3. Install the battery in the reverse order of removal.

For transmitter replacement, we recommend that you contact an authorized Kia dealer.

⚠ CAUTION

- ***The keyless entry system transmitter is designed to give you years of trouble-free use, however it can malfunction if exposed to moisture or static electricity. If you are unsure how to use or replace the battery, we recommend that you contact an authorized Kia dealer.***
- ***Using the wrong battery can cause the transmitter to malfunction. Be sure to use the correct battery.***
- ***To avoid damaging the transmitter, don't drop it, get it wet, or expose it to heat or sunlight.***

✻ NOTICE

An inappropriately disposed battery can be harmful to the environment and human health.
Dispose the battery according to your local law(s) or regulation.

THEFT-ALARM SYSTEM (IF EQUIPPED)

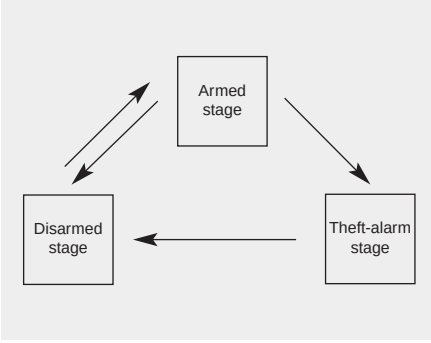

This system is designed to provide protection from unauthorized entry into the vehicle. This system is operated in three stages: the first is the “Armed” stage, the second is the “Theft-alarm” stage, and the third is the “Disarmed” stage. If triggered, the system provides an audible alarm with blinking of the hazard warning lights.

Armed stage

Park the vehicle and stop the engine. Arm the system as described below.

Using the folding key

1. Turn off the engine and remove the ignition key from the ignition switch.
2. Make sure that all doors, the engine hood and tailgate are closed and latched.
3. Lock the doors by pressing the lock button on the transmitter.

   After completion of the steps above, the hazard warning lights will blink once to indicate that the system is armed.

   If the tailgate or engine hood remains opened, the hazard warning lights will not operate and theft-alarm will not arm. After this, if the tailgate and engine hood are closed, the hazard warning lights will blink once and the theft-alarm will arm.

Using the smart key

1. Turn off the engine.
2. Make sure that all doors, the engine hood and tailgate are closed and latched.
3. • Lock the doors by pressing the button of the front outside door handle with the smart key in your possession.

   After completion of the steps above, the hazard warning lights will operate once to indicate that the system is armed.

   If the tailgate or engine hood remains opened, the hazard warning lights will not operate and theft-alarm will not arm. After this, if the tailgate and engine hood are closed, the hazard warning lights will blink once and the theft-alarm will arm.

- Lock the doors by pressing the lock button on the smart key.

  After completion of the steps above, the hazard warning lights will operate once to indicate that the system is armed.

  If the tailgate or engine hood remains opened, the hazard warning lights will not operate and theft-alarm will not arm. After this, if the tailgate and engine hood are closed, the hazard warning lights will blink once and the theft-alarm will arm.

Do not arm the system until all passengers have left the vehicle. If the system is armed while a passenger(s) remains in the vehicle, the alarm may be activated when the remaining passenger(s) leaves the vehicle. If any door (or tailgate) or engine hood is opened within 30 seconds after the system enters the armed stage, the system will be disarmed to prevent unnecessary alarm.

Theft-alarm stage

The alarm will be activated if any of the following occurs while the system is armed.

- A front or rear door is opened without using the transmitter.
- The tailgate is opened without using the transmitter.
- The engine hood is opened.

The horn will sound and the hazard warning lights will blink continuously for approximately 27 seconds. To turn off the system, unlock the doors with the transmitter.

Disarmed stage

The system will be disarmed when:

Folding key

- The door unlock button is pressed.
- The engine is started. (within 3 seconds)
- The ignition switch is in the “ON” position for 30 seconds or more.

Smart key

- The door unlock button is pressed.
- The button of the front outside door is pressed while carrying the smart key.
- The engine is started. (within 3 seconds)

After the doors are unlocked, the hazard warning lights will blink twice to indicate that the system is disarmed.

After pressing the unlock button, if any door (or tailgate) is not opened within 30 seconds, the system will be rearmed.

✻ NOTICE

- **Without smart key system**
  If the system is not disarmed with the transmitter, insert the key into the ignition switch and start the engine. Then the system will be disarmed.
- **With smart key system**
  If the system is not disarmed with the smart key, open the door with the mechanical key and start the engine. Then the system will be disarmed.
- **If you lose your keys, we recommend that you consult an authorized Kia dealer.**

⚠ CAUTION

Do not change, alter or adjust the theft-alarm system because it could cause the theft-alarm system to malfunction and we recommend that the system be serviced by an authorized Kia dealer.

Malfunctions caused by improper alterations, adjustments or modifications to the theft-alarm system are not covered by your vehicle manufacturer warranty.

DOOR LOCKS

Operating door locks from outside the vehicle

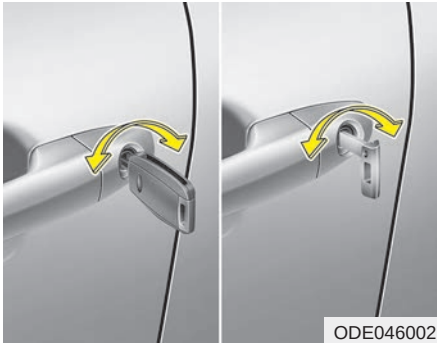

- Turn the key toward the rear of the vehicle to lock and toward the front of the vehicle to unlock.
- If you lock/unlock the driver's door with a key, all vehicle doors will lock/unlock automatically.
- Doors can also be locked and unlocked with the transmitter.
- Once the doors are unlocked, they may be opened by pulling the door handle.
- When closing the door, push the door by hand. Make sure the doors are closed securely.

✻ NOTICE

- **In cold and wet climates, door lock and door mechanisms may not work properly due to freezing conditions.**
- **If the door is locked/unlocked multiple times in rapid succession with either the vehicle key or door lock switch, the system may stop operating temporarily in order to protect the circuit and prevent damage to system components.**

⚠ WARNING

- **If you don't close the door securely, the door may open again.**
- **Be careful that someone's body and hands are not trapped when closing the door.**

⚠ WARNING

If people must spend a longer time in the vehicle while it is very hot or cold outside, there is rick of injuries or danger to life. Do not lock the vehicle from the outside when there are people in it.

⚠ CAUTION

Do not frequently repeat opening and closing of doors, or apply excessive force to a door while the door closer is operating.

Operating door locks from inside the vehicle

With the door lock button

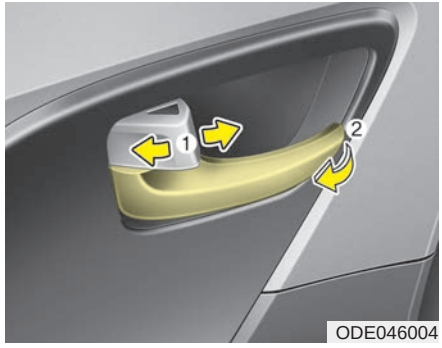

ODE046004

- To unlock a door, pull the door lock button (1) to the “Unlock” position. The red mark on the door lock button will be visible.
- To lock a door, push the door lock button (1) to the “Lock” position. If the door is locked properly, the red mark on the door lock button will not be visible.
- To open a door, pull the door handle (2) outward.

- If the inner door handle of the driver’s (or front passenger’s) door is pulled when the door lock button is in the lock position, the button will unlock and the door will open. (if equipped)
- Front door cannot be locked if the ignition key is in the ignition switch (or if the smart key is in the vehicle) and the front door is opened.

⚠ WARNING - Door lock malfunction

If a power door lock ever fails to function while you are in the vehicle, try one or more of the following techniques to exit:

- **Operate the door unlock feature repeatedly (both electronic and manual) while simultaneously pulling on the door handle.**
- **Operate the other door locks and handles, front and rear.**
- **Lower a front window and use the key to unlock the door from outside.**
- **Move to the cargo area and open the tailgate.**

⚠ WARNING

Do not pull the inner door handle of driver’s(or passenger’s) door while the vehicle is moving.

With central door lock switch

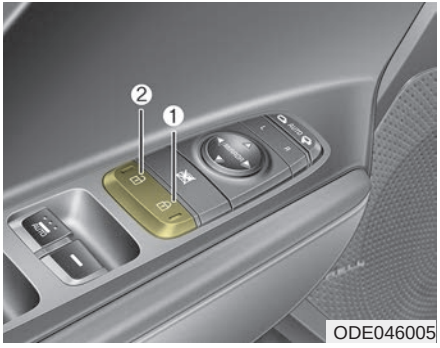

Operate by pressing the central door lock switch.

- When pressing the (🔒) portion (1) of the switch, all vehicle doors will lock.
- When pressing the (🔓) portion (2) of the switch, all vehicle doors will unlock.
- If the key is in the ignition switch (or if the smart key is in the vehicle) and any door is opened, the doors will not lock even though the (🔒) portion (1) of the central door lock switch is pressed.

⚠ WARNING - Doors

- **The doors should always be fully closed and locked while the vehicle is in motion to prevent accidental opening of the door. Locked doors will also discourage potential intruders when the vehicle stops or slows down.**
- **Be careful when opening doors and watch for vehicles, motorcycles, bicycles or pedestrians approaching the vehicle in the path of the door. Opening a door when something is approaching can cause damage or injury.**

⚠ WARNING - Unlocked vehicles

Leaving your vehicle unlocked can invite theft or possible harm to you or others from someone hiding in your vehicle while you are gone. Always remove the ignition key, engage the parking brake, close all windows and lock all doors when leaving your vehicle unattended.

⚠ WARNING - Unattended children

An enclosed vehicle can become extremely hot, causing death or severe injury to unattended children or animals who cannot escape the vehicle. Furthermore, children might operate features of the vehicle that could injure them, or they could encounter other harm, possibly from someone gaining entry to the vehicle. Never leave children or animals unattended in your vehicle.

Door lock/unlock features

Impact sensing door unlock system (if equipped)

All doors will automatically unlock when an impact causes the air bags to deploy.

Speed sensing door lock system (if equipped)

All doors will automatically lock after the vehicle speed exceeds 15 km/h.

You can activate or deactivate the auto door lock/unlock features in the vehicle. Refer to “User setting” in this chapter.

Child-protector rear door locks

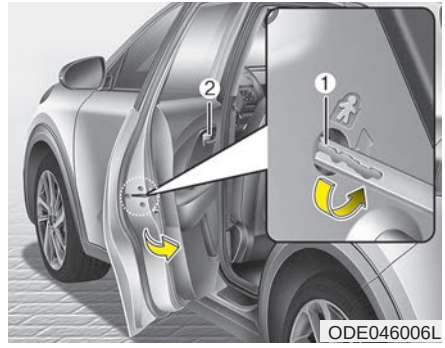

The child safety lock is provided to help prevent children from accidentally opening the rear doors from inside the vehicle. The rear door safety locks should be used whenever children are in the vehicle.

The child safety lock is located on the edge of each rear door. When the child safety lock is in the lock position (1), the rear door will not open if the inner door handle (2) is pulled.

To lock the child safety lock, insert a key (or screwdriver) into the hole and turn it to the lock position.

To allow a rear door to be opened from inside the vehicle, unlock the child safety lock.

⚠ WARNING - Rear door locks

If children accidentally open the rear doors while the vehicle is in motion, they could fall out and be severely injured or killed. To prevent children from opening the rear doors from the inside, the rear door safety locks should be used whenever children are in the vehicle.

TAILGATE

⚠ WARNING - Exhaust fumes

If you drive with the tailgate opened, you will draw dangerous exhaust fumes into your vehicle which can cause serious injury or death to vehicle occupants.

If you must drive with the tailgate opened, keep the air vents and all windows open so that additional outside air comes into the vehicle.

⚠ WARNING - Rear cargo area

Occupants should never ride in the rear cargo area where no restraints are available. To avoid injury in the event of an accident or sudden stops, occupants should always be properly restrained.

Opening the tailgate

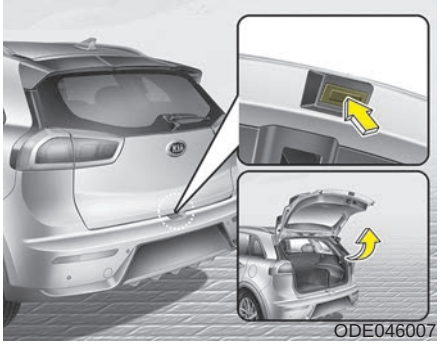

- The tailgate is locked or unlocked when all doors are locked or unlocked with the key, transmitter, smart key or central door lock/unlock switch.
- Only the tailgate is unlocked if the tailgate unlock button on the transmitter or smart key is pressed for approximately 1 second.
- If unlocked, the tailgate can be opened by pressing the handle and pulling it up.
- Once the tailgate is opened and then closed, the tailgate locks automatically. (All doors must be locked.)

✻ NOTICE

In cold and wet climates, door lock and door mechanisms may not work properly due to freezing conditions.

⚠ WARNING

The tailgate swings upward. Make sure no objects or people are near the rear of the vehicle when opening the tailgate.

⚠ CAUTION

Make certain that you close the tailgate before driving your vehicle. Possible damage may occur to the tailgate lift cylinders and attaching hardware if the tailgate is not closed prior to driving.

Closing the tailgate

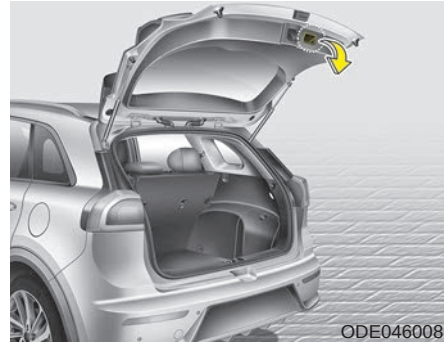

Lower and push down the tailgate firmly. Make sure that the tailgate is securely latched.

⚠ WARNING

Make sure your hands, feet and other parts of your body are safely out of the way before closing the tailgate.

⚠ WARNING - Exhaust fumes

The tailgate lid should always be kept completely closed while the vehicle is in motion. If it is left open or ajar, exhaust gases may enter the car and serious illness or death may result.

⚠ CAUTION

Make sure nothing is near the tailgate latch and striker while closing the tailgate. It may damage the tailgate's latch.

Emergency tailgate safety release

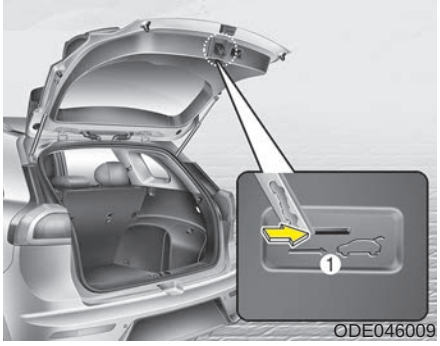

Your vehicle is equipped with the emergency tailgate safety release lever located on the bottom of the tailgate. When someone is inadvertently locked in the luggage compartment. The tailgate can be opened by doing as follows:

1. Input the mechanical key into the hole.
2. Push the mechanical key to the right.
3. Push up the tailgate.

⚠ WARNING

- **For emergencies, be fully aware of the location of the emergency tailgate safety release lever in the vehicle and how to open the tailgate if you are accidentally locked in the luggage compartment.**
- **No one should be allowed to occupy the luggage compartment of the vehicle at any time. The luggage compartment is a very dangerous location in the event of a crash.**
- **Use the release lever for emergencies only. Use with extreme caution, especially while the vehicle is in motion.**

WINDOWS

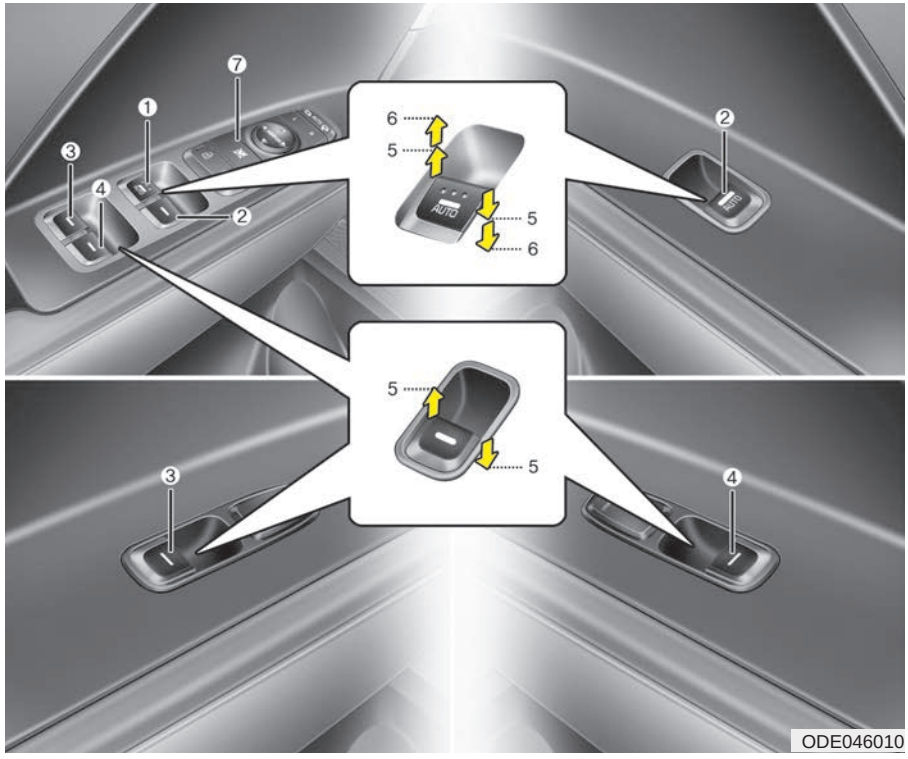

(1) Driver's door power window switch
(2) Front passenger's door power window switch
(3) Rear door (left) power window switch
(4) Rear door (right) power window switch
(5) Window opening and closing
(6) Automatic power window up*/ down*
(7) Power window lock switch

* if equipped

✻ NOTICE

In cold and wet climates, power windows may not work properly due to freezing conditions.

Power windows

The ignition switch must be in the ON position for power windows to operate.

Each door has a power window switch that controls the door's window. The driver has a power window lock button which can block the operation of passenger windows. The power windows can be operated for approximately 30 seconds after the ignition key is removed or turned to the ACC or LOCK position. However, if the front doors are opened, the power windows cannot be operated even within the 30 second period.

The driver's door has a master power window switch that controls all the windows in the vehicle.

If the window cannot be close because it is blocked by objects, remove the objects and close the window.

✻ NOTICE

While driving with the rear windows down or with the sunroof (if equipped) in an open (or partially open position), your vehicle may demonstrate a wind buffeting or pulsation noise. This noise is a normal occurrence and can be reduced or eliminated by taking the following actions. If the noise occurs with one or both of the rear windows down, partially lower both front windows approximately one inch. If you experience the noise with the sunroof open, slightly reduce the size of the sunroof opening.

⚠ WARNING

Do not install any accessories in the area of windows. It may impact jam protection.

Window opening and closing

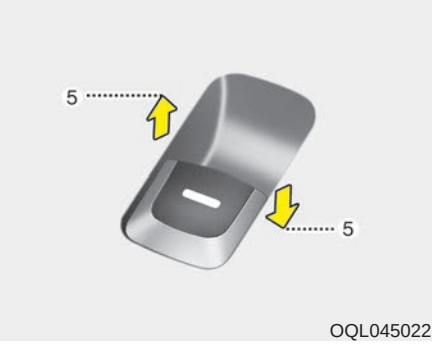

Type A

To open or close a window, press down or pull up the front portion of the corresponding switch to the first detent position (5).

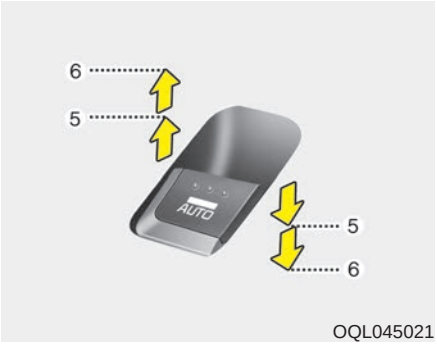

OQL045021

Type B - Auto up/down window (if equipped)

Pressing or pulling up the power window switch momentarily to the second detent position (6) completely lowers or raises the window even when the switch is released. To stop the window at the desired position while the window is in operation, pull up or press down and release the switch.

If the power window does not operate normally, the automatic power window system must be reset as follows:

1. Turn the ignition switch to the ON position.
2. Close the window and continue pulling up the power window switch for at least 1 second after the window is completely closed.

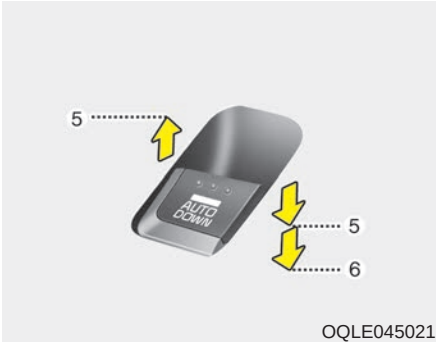

OQLE045021

Type C - Auto down window (if equipped) (Driver's window)

Pressing the power window switch momentarily to the second detent position (6) completely lowers the driver's window even when the switch is released. To stop the window at the desired position while the window is in operation, pull up the switch momentarily to the opposite direction of the window movement.

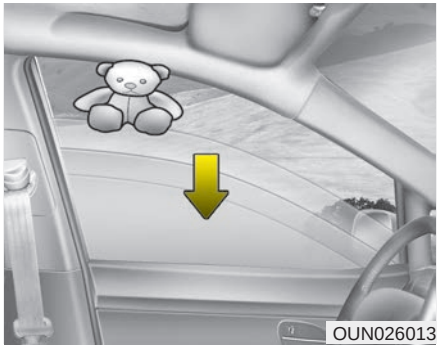

Automatic reversal (For Type B)

If the upward movement of the window is blocked by an object or part of the body, the window will detect the resistance and will stop upward movement. The window will then lower approximately 30 cm (11.8 in.) to allow the object to be cleared.

If the window detects the resistance while the power window switch is pulled up continuously, the window will stop upward movement then lower approximately 2.5 cm (1 in.).

And if the power window switch is pulled up continuously again within 5 seconds after the window is lowered by the automatic window reversal feature, the automatic window reversal will not operate.

✻ NOTICE

The automatic reverse feature for the window is only active when the "auto up" feature is used by fully pulling up the switch. The automatic reverse feature will not operate if the window is raised using the halfway position on the power window switch.

⚠ WARNING

Always check for obstructions before raising any window to avoid injuries or vehicle damage. If an object less than 4 mm (0.16 in.) in diameter is caught between the window glass and the upper window channel, the automatic reverse window may not detect the resistance and will not stop and reverse direction.

⚠ WARNING

The automatic reverse feature doesn't activate while resetting power window system. Make sure body parts or other objects are safely out of the way before closing the windows to avoid injuries or vehicle damage.

Power window lock button

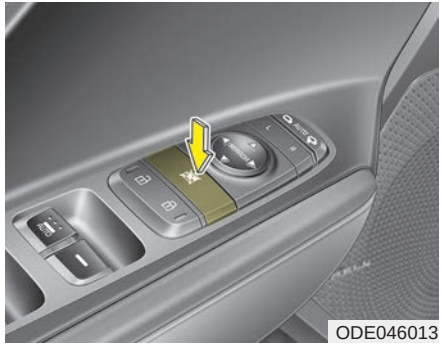
ODE046013

The driver can disable the power window switches on the rear passengers' doors by pressing the power window lock switch to the lock position (pressed).

When the power window lock switch is pressed :

- The driver's master control can operate the front passenger's power window and the rear passengers' power windows.
- The front passenger's control can operate the front passenger's power window.
- The rear passengers' control cannot operate the rear passengers' power window.

⚠ CAUTION

- ***To prevent possible damage to the power window system, do not open or close two windows or more at the same time. This will also ensure the longevity of the fuse.***
- ***Never try to operate the main switch on the driver's door and the individual door window switch in opposite directions at the same time. If this is done, the window will stop and cannot be opened or closed.***

⚠ WARNING - Windows

- **NEVER leave the keys in your vehicle with unsupervised children, when the engine is running.**
- **NEVER leave any child unattended in the vehicle. Even very young children may inadvertently cause the vehicle to move, entangle themselves in the windows, or otherwise injure themselves or others.**
- **Always double check to make sure all arms, hands, head and other obstructions are safely out of the way before closing a window.**
- **Do not allow children play with the power windows. Keep the driver's door power window lock button in the LOCK position (pressed). Serious injury can result from unintentional window operation by the child.**
- **Do not extend a face or arms outside through the window opening while driving.**

HOOD

Opening the hood

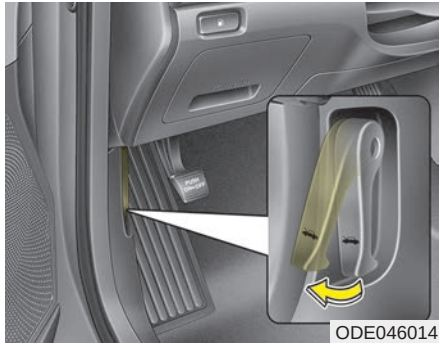

1. Pull the release lever to unlatch the hood. The hood should pop open slightly.

⚠ WARNING

Open the hood after turning off the engine on a flat surface, shifting the shift lever to the P(Park) position for dual clutch transmission and setting the parking brake.

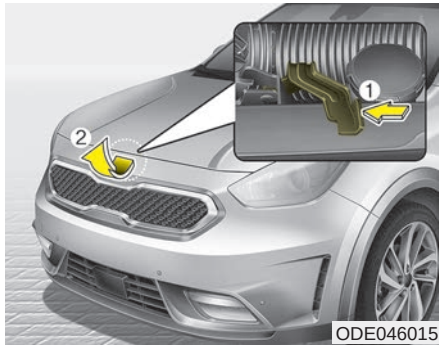

2. Go to the front of the vehicle, raise the hood slightly, push the secondary latch (1) up side and lift the hood (2).
3. Raise the hood. It will completely rise by itself after it has been raised about halfway.

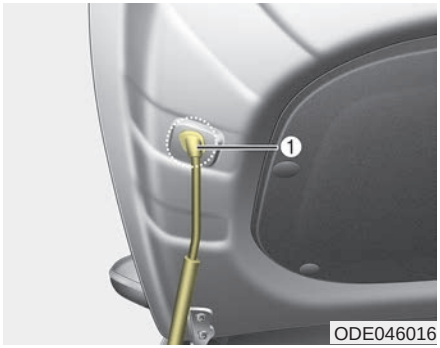

4. Pull out the stay rod.
5. Hold the hood opened with the stay rod (1).

⚠ WARNING

- **Grasp the stay rod in the area wrapped in rubber. The rubber will help prevent you from being burned by hot metal when the engine is hot.**
- **The stay rod must be inserted completely into the hole provided whenever you inspect the engine compartment. This will prevent the hood from falling and possibly injuring you.**

Hood open warning (if equipped)

The warning message will appear on the LCD display when hood is open.

The warning chime will operate when the vehicle is being driven above 3 km/h (2 mph) with the hood open.

Closing the hood

1. Before closing the hood, check the following:
   - All filler caps in the engine compartment must be correctly installed.
   - Gloves, rags or any other combustible material must be removed from the engine compartment.
2. Lower the hood halfway and push down to securely lock in place.
   - Then double check to be sure the hood is secure.
   - If the hood can be lifted with a slight force, open the hood again and close it more firmly.

⚠ WARNING

- **Before closing the hood, ensure that all obstructions are removed from the hood opening. Closing the hood with an obstruction present in the hood opening may result in property damage or severe personal injury.**
- **Do not leave gloves, rags or any other combustible material in the engine compartment. Doing so may cause a heat-induced fire.**

⚠ WARNING

- **Always double check to be sure that the hood is firmly latched before driving away. If it is not latched, the hood could open while the vehicle is being driven, causing total loss of visibility, which might result in an accident.**
- **Do not move the vehicle with the hood raised. The view will be blocked and the hood could fall or be damaged.**

FUEL FILLER LID

Opening the fuel filler lid

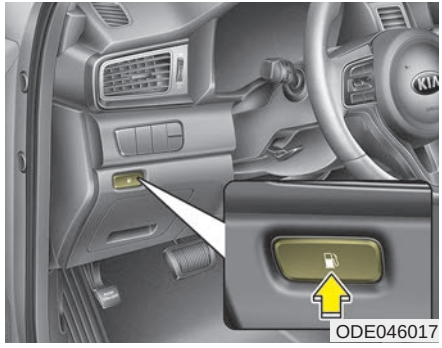

1. The fuel filler lid must be opened from inside the vehicle by pushing the fuel filler lid opener.

✻ NOTICE

If the fuel filler lid does not open because ice has formed around it, tap lightly or push on the lid to break the ice and release the lid. Do not pry on the lid. If necessary, spray around the lid with an approved de-icer fluid (do not use radiator anti-freeze) or move the vehicle to a warm place and allow the ice to melt.

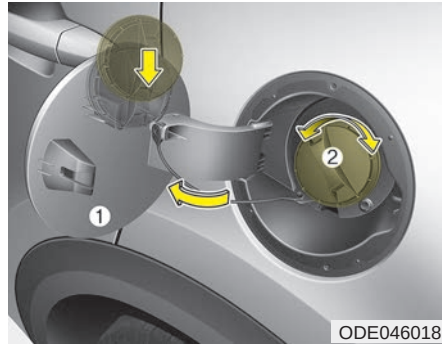

2. Pull the fuel filler lid (1) out to fully open.
3. To remove the fuel tank cap (2), turn it counterclockwise. You may hear a hissing noise as the pressure inside the tank equalizes.
4. Place the cap on the fuel filler lid.

Closing the fuel filler lid

1. To install the cap, turn it clockwise until it “clicks”. This indicates that the cap is securely tightened.
2. To close the fuel filler lid, press the edge of the fuel filler lid.

   Make sure it is securely closed.

⚠ WARNING - Refueling

- **If pressurized fuel sprays out, it can cover your clothes or skin and subject you to the risk of fire and burns. Always remove the fuel cap carefully and slowly. If the cap is venting fuel or if you hear a hissing sound, wait until the condition stops before completely removing the cap.**
- **Do not "top off" after the nozzle automatically shuts off when refueling.**
- **Always check that the fuel cap is installed securely to prevent fuel spillage in the event of an accident.**

⚠ WARNING - Refueling dangers

Automotive fuels are flammable materials. When refueling, please note the following guidelines carefully. Failure to follow these guidelines may result in severe personal injury, severe burns or death by fire or explosion.

- **Read and follow all warning posted at the gas station facility.**
- **Before refueling note the location of the Emergency Gasoline Shut-Off, if available, at the gas station facility.**
- **Before touching the fuel nozzle, you should eliminate potentially dangerous static electricity discharge by touching another metal part of the vehicle, a safe distance away from the fuel filler neck, nozzle, or other gas source.**

(Continued)

(Continued)

- **Do not get back into a vehicle once you have begun refueling since you can generate static electricity by touching, rubbing or sliding against any item or fabric (polyester, satin, nylon, etc.) capable of producing static electricity. Static electricity discharge can ignite fuel vapors resulting in rapid burning. If you must re-enter the vehicle, you should once again eliminate potentially dangerous static electricity discharge by touching a metal part of the vehicle, away from the fuel filler neck, nozzle or other gasoline source.**
- **When using an approved portable fuel container, be sure to place the container on the ground prior to refueling. Static electricity discharge from the container can ignite fuel vapors causing a fire.**

(Continued)

(Continued)

Once refueling has begun, contact with the vehicle should be maintained until the filling is complete.

Use only approved portable plastic fuel containers designed to carry and store gasoline.

- **Do not use cellular phones while refueling. Electric current and/or electronic interference from cellular phones can potentially ignite fuel vapors causing a fire.**
- **When refueling, always shut the engine off. Sparks produced by electrical components related to the engine can ignite fuel vapors causing a fire. Once refueling is complete, check to make sure the filler cap and filler lid are securely closed, before starting the engine.**

(Continued)

(Continued)

- **DO NOT use matches or a lighter and DO NOT SMOKE or leave a lit cigarette in your vehicle while at a gas station especially during refueling. Automotive fuel is highly flammable and can, when ignited, result in fire.**
- **If a fire breaks out during refueling, leave the vicinity of the vehicle, and immediately contact the manager of the gas station and then contact the local fire department. Follow any safety instructions they provide.**

⚠ CAUTION

- ***Make sure to refuel your vehicle according to the "Fuel requirements" suggested in chapter 1.***
- ***If the fuel filler cap requires replacement, please make sure that you use parts designed for replacement in your vehicle. An incorrect fuel filler cap can result in a serious malfunction of the fuel system or emission control system. For more detailed information, we recommend that you contact an authorized Kia dealer.***
- ***Do not spill fuel on the exterior surfaces of the vehicle. Any type of fuel spilled on painted surfaces may damage the paint.***
- ***After refueling, make sure the fuel cap is installed securely to prevent fuel spillage in the event of an accident.***

SUNROOF (IF EQUIPPED)

ODE046035L

If your vehicle is equipped with a sunroof, you can slide or tilt your sunroof with the sunroof control switch located on the overhead console.

The sunroof can only be opened, closed, or tilted when the ignition switch is in the ON position.

✻ NOTICE

- **In cold and wet climates, the sunroof may not work properly due to freezing conditions.**
- **After washing the car or after there is rain, be sure to wipe off any water that is on the sunroof before operating it.**

⚠ CAUTION

- ***Do not continue to move the sunroof control lever after the sunroof is in the fully open, closed, or tilt position. Damage to the motor or system components could occur.***
- ***Make sure the sunroof is closed fully when leaving your vehicle. If the sunroof is open, rain or snow may leak through the sunroof and wet the interior as well as cause theft.***

✻ NOTICE

The sunroof cannot slide when it is in the tilt position nor can it be tilted while in an open or slide position.

⚠ WARNING

Never adjust the sunroof or sunshade while driving. This could result in loss of control and an accident that may cause death, serious injury, or property damage.

⚠ WARNING

- **In order to prevent accidental operation of the sunroof, especially by a child, do not let a child operate the sunroof.**
- **Do not sit on the top of the vehicle. It may cause vehicle damage.**

Sliding the sunroof

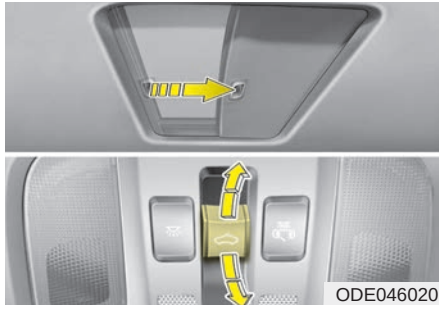
ODE046020

To open or close the sunroof (manual slide feature), push the sunroof control lever backward or forward to the first detent position.
To open the sunroof (autoslide feature), push the sunroof control switch backward to the second detent position.

The sunroof will slide to the recommended open position (about 7 cm before the maximum slide open position).
To stop the sunroof sliding at any point, push the sunroof control switch momentarily.

To open the sunroof to the maximum slide open position, press the switch towards the rear of the vehicle once again and hold it until the sunroof slide all the way open.

✻ NOTICE

To reduce wind noise while driving, we recommend you to drive at the recommended position (about 7 cm before the maximum slide open position).

To close the sunroof (autoslide feature), move the sunroof control switch forward to the second detent position.

The sunroof will close all the way. To stop the sunroof sliding at any point, pull or push the sunroof control switch momentarily.

Automatic reversal

OBK049018

If an object or part of the body is detected while the sunroof is closing automatically, it will reverse direction, and then stop.

The auto reverse function does not work if a small obstacle is between the sliding glass and the sunroof sash. You should always check that all passengers and objects are away from the sunroof before closing it.

Tilting the sunroof

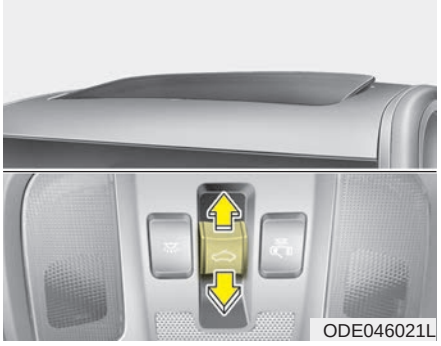

To open the sunroof

Push the sunroof control lever upward until the sunroof moves to the desired position.

To close the sunroof

Move the sunroof lever forward until the sunroof moves to the desired position.

⚠ WARNING - Sunroof

- **Be careful that someone's head, hands and body are not trapped by a closing sunroof.**
- **Do not extend face, neck, arms or body outside through the sunroof opening while driving.**
- **Make sure hand and face are safely out of the way before closing a sunroof.**

⚠ CAUTION

- ***Periodically remove any dirt that may accumulate on the guide rail.***
- ***If you try to open the sunroof when the temperature is below freezing or when the sunroof is covered with snow or ice, the glass or the motor could be damaged.***
- ***While using sunroof for a long time, a dust between sunroof and roof panel can make a noise. Open the sunroof and regularly remove the dust using clean cloth.***

Sunshade

The sunshade will be opened with the glass panel automatically when the glass panel is opened. You will have to close it manually if you want it closed.

⚠ CAUTION

The sunroof is made to slide together with the sunshade. Do not leave the sunshade closed while the sunroof is open.

Resetting the sunroof

Reset the sunroof when:

- The vehicle battery has discharged or replaced, or the fuse has been replaced.
- The sunroof does not operate normally.
- The glass opens during operation even though there are no obstructions.
- The glass is not of uniform height.

1. Turn the ignition switch to the ON position or start the engine. We recommend resetting the sunroof while the engine is running.
2. Close the sunroof completely if opened.
3. Release the sunroof control lever.
4. Move the sunroof control lever forward in the direction of close until the sunroof moves tilt up. Then, release the lever.
5. Move the sunroof control lever forward in the direction of close, until the sunroof operates as follows again:

   Tilt down → Slide Open → Slide Close.

✻ NOTICE

Do not release the lever until the operation is completed.
If you release the lever during operation, try again from step 2.

6. Release the sunroof control lever after all operation has completed. (The sunroof system has been reset.)

✻For more detailed information, we recommend that you contact an authorized Kia dealer.

⚠ CAUTION

If the sunroof is not reset when the vehicle battery is disconnected or discharged, or related fuse is blown, the sunroof may operate improperly.

Sunroof open warning

ODE046119

If the driver removes the ignition key (smart key: turns off the engine) when the sunroof is not fully closed, the warning chime will sound for approximately 6 seconds and a message will appear on the LCD window.

Close the sunroof securely when leaving your vehicle.

STEERING WHEEL

Electronic power steering

Power steering uses the motor to assist you in steering the vehicle. If the engine is off or if the power steering system becomes inoperative, the vehicle may still be steered, but it will require increased steering effort.

Electronic power steering is controlled by the power steering control unit which senses the steering wheel torque and vehicle speed to command the motor.

The steering effort becomes heavier as the vehicle's speed increases and becomes lighter as the vehicle's speed decreases for better control of the steering wheel.

Should you notice any change in the effort required to steer during normal vehicle operation, we recommend that the system be checked by an authorized Kia dealer.

✻ NOTICE

The following symptoms may occur during normal vehicle operation:

- **The EPS warning light does not illuminate.**
- **The steering effort is high immediately after turning the ignition switch on. This happens as the EPS system performs the diagnostics. When the diagnostics is completed, the steering effort will return to its normal condition.**
- **A click noise may be heard from the EPS relay after the ignition switch is turned to the ON or LOCK position.**
- **Motor noise may be heard when the vehicle is at a stop or at a low driving speed.**
- **The steering effort can suddenly increase, if the operation of the EPS system is stopped to prevent serious accidents when EPS control unit detects malfunction of the EPS system by self-diagnosis.**
- **The steering effort increases if the steering wheel is rotated continuously when the vehicle is not in motion.**

(Continued)

(Continued)

However, after a few minutes, it will return to its normal conditions.

- **If the Electronic Power Steering System does not operate normally, the warning light will illuminate on the instrument cluster. The steering wheel may become difficult to control or operate abnormally. We recommend that you contact an authorized Kia dealer.**
- **When you operate the steering wheel in low temperature, the steering effort may be high and abnormal noise could occur. If temperature rises, the noise will disappear. This is a normal condition.**
- **If the vehicle needs to be jump started due to battery discharge, the steering wheel may not function normally. This is a temporary situation caused by low battery voltage. It will be solved once the battery is charged. Check for normal steering function by turning the steering wheel slowly before driving the vehicle.**

Tilt & telescopic steering

A tilt and telescopic steering wheel allows you to adjust the steering wheel before you drive. You can also raise it to give your legs more room when you exit and enter the vehicle.

The steering wheel should be positioned so that it is comfortable for you to drive, while permitting you to see the instrument panel warning lights and gauges.

⚠ WARNING

- **Never adjust the angle of the steering wheel while driving. You may lose steering control and cause severe personal injury, death or accidents.**
- **After adjusting, push the steering wheel both up and down to be certain it is locked in position.**

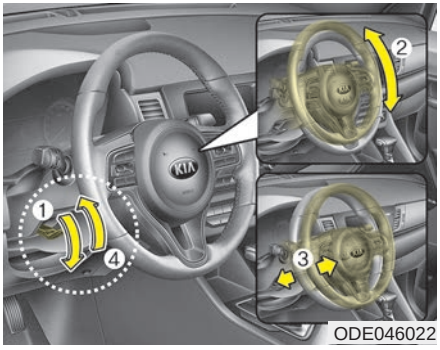

ODE046022

To change the steering wheel angle, pull down the lock release lever (1), adjust the steering wheel to the desired angle (2) and height (3), then pull up the lock-release lever (4) to lock the steering wheel in place. Be sure to adjust the steering wheel to the desired position before driving.

✻ NOTICE

After adjustment, sometimes the lock-release lever may not lock the steering wheel.
It is not a malfunction. This occurs when two gears engage. In this case, adjust the steering wheel again and then lock the steering wheel.

Heated steering wheel (if equipped)

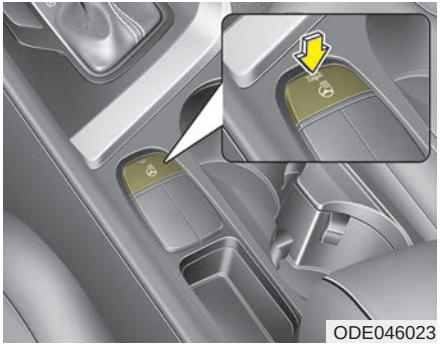
ODE046023

With the ignition switch in the ON position or engine start/stop button in the ON position, pressing the heated steering wheel button warms the steering wheel. The indicator on the button will illuminate.

To turn the heated steering wheel off, press the button once again. The indicator on the button will turn off.

✻ NOTICE

The heated steering wheel will turn off automatically approximately 30 minutes after the heated steering wheel is turned on.

⚠ CAUTION

Do not install any grip to operate the steering wheel. This causes damage to the heated steering wheel system.

Horn

ODE046024

To sound the horn, press the area indicated by the horn symbol on your steering wheel (see illustration). The horn will operate only when this area is pressed. Check the horn regularly to be sure it operates properly.

⚠ CAUTION

- ***Do not strike the horn severely to operate it, or hit it with your fist. Do not press on the horn with a sharp-pointed object.***
- ***When cleaning the steering wheel, do not use an organic solvent such as thinner, benzene, alcohole and gasoline. Doing so may damage the steering wheel.***

MIRRORS

Inside rearview mirror

Adjust the rearview mirror so that the center view through the rear window is seen. Make this adjustment before you start driving.

⚠ WARNING - Rear visibility

Do not place objects in the rear seat or cargo area which would interfere with your vision through the rear window.

⚠ WARNING

Do not adjust the rearview mirror while the vehicle is moving. This could result in loss of control, and an accident which could cause death, serious injury or property damage.

⚠ WARNING

Do not modify the inside mirror and don't install a wide mirror. It could result in injury, during an accident or deployment of the air bag.

Day/night rearview mirror (if equipped)

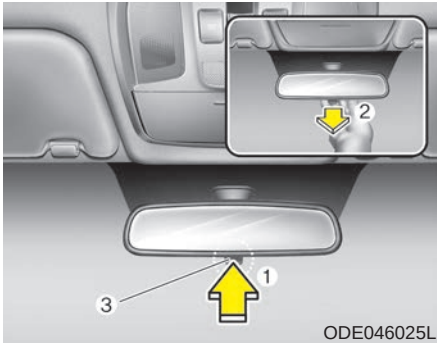

Make this adjustment before you start driving and while the day/night lever(3) is in the day position (1).

Pull the day/night lever(3) toward you (2) to reduce the glare from the headlights of the vehicles behind you during night driving.

Remember that you lose some rearview clarity in the night position.

❈ (1) : Day, (2) : Night

Electrochromic mirror (ECM) (if equipped)

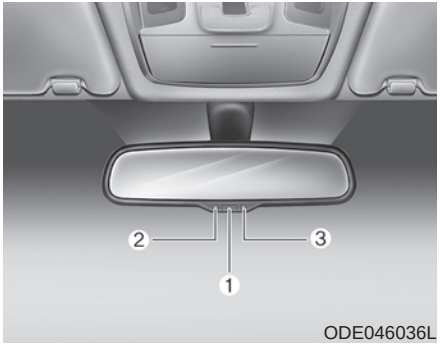

The electric rearview mirror automatically controls the glare from the headlights of the vehicles behind you in nighttime or low light driving conditions. The sensor (3) mounted in the mirror senses the light level around the vehicle, and automatically controls the headlight glare from the vehicles behind you.

When the engine is running, the glare is automatically controlled by the sensor mounted in the rearview mirror.

Whenever the shift lever is shifted into reverse (R), the mirror will automatically go to the brightest setting in order to improve the drivers view behind the vehicle.

⚠ CAUTION

When cleaning the mirror, use a paper towel or similar material dampened with glass cleaner. Do not spray glass cleaner directly on the mirror. It may cause the liquid cleaner to enter the mirror housing.

To operate the electric rearview mirror:

- The mirror defaults to the ON position whenever the ignition switch is turned on.
- Press the ON/OFF button (1) to turn the automatic dimming function off. The mirror indicator light (2) will turn off.

  Press the ON/OFF button (1) to turn the automatic dimming function on. The mirror indicator light (2) will illuminate.

Outside rearview mirror

Be sure to adjust the mirror angles before driving.

Your vehicle is equipped with both left-hand and right-hand outside rearview mirrors. The mirrors can be adjusted remotely with the remote switch. The mirror heads can be folded back to prevent damage during an automatic car wash or when passing through a narrow street.

⚠ WARNING - Rearview mirrors

- **The outside rearview mirror is convex. Objects seen in the mirror are closer than they appear.**
- **Use your interior rearview mirror or direct observation to determine the actual distance of following vehicles when changing lanes.**

⚠ CAUTION

Do not scrape ice off the mirror face; this may damage the surface of the glass. If ice should restrict the movement of the mirror, do not force the mirror for adjustment. To remove ice, use a deicer spray, or a sponge or soft cloth with warm water.

⚠ CAUTION

If the mirror is jammed with ice, do not adjust the mirror by force. Use an approved spray de-icer (not radiator antifreeze) to release the frozen mechanism or move the vehicle to a warm place and allow the ice to melt.

⚠ WARNING

Do not adjust or fold the outside rearview mirrors while the vehicle is moving. This could result in loss of control, and an accident which could cause death, serious injury or property damage.

Remote control

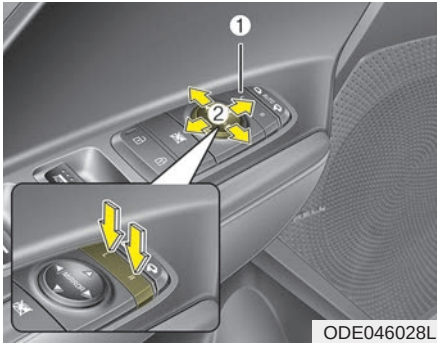

Adjusting the rearview mirrors :

1. Press either the L (Front left side) or R (Front right side) button (1) to select the rearview mirror you would like to adjust.
2. Use the mirror adjustment control (2) to position the selected mirror up, down, left or right.
3. After adjustment, put the button into neutral (center) position to prevent inadvertent adjustment.

⚠ **CAUTION**

- ***The mirrors stop moving when they reach the maximum adjusting angles, but the motor continues to operate while the switch is pressed. Do not press the switch longer than necessary, the motor may be damaged.***
- ***Do not attempt to adjust the outside rearview mirror by hand. Doing so may damage the parts.***

Folding the outside rearview mirror

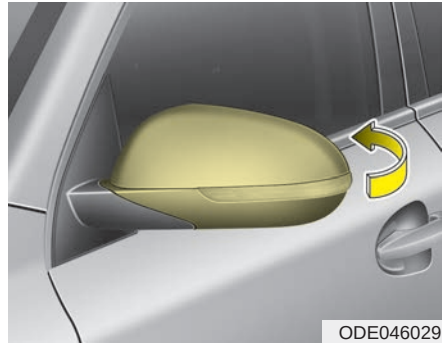
ODE046029

Manual type

To fold the outside rearview mirror, grasp the housing of the mirror and then fold it toward the rear of the vehicle.

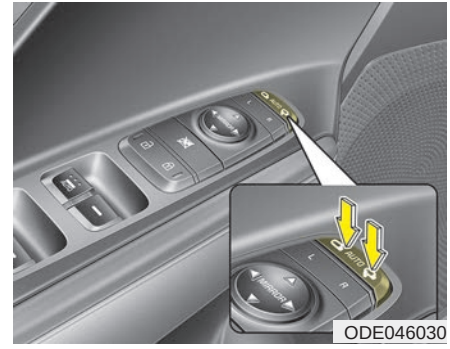
ODE046030

Electric type

The outside rearview mirror can be folded or unfolded by pressing the switch as below.

Left : The mirror will unfold.

Right : The mirror will fold.

Center (AUTO) :

The mirror will fold or unfold automatically as follows:

- Without smart key system
  - The mirror will fold or unfold when the door is locked or unlocked by the transmitter. (if equipped)

- With smart key system
  - The mirror will fold or unfold when the door is locked or unlocked by the smart key.
  - The mirror will fold or unfold when the door is locked or unlocked by the button on the outside door handle.
  - The mirror will unfold when you approach the vehicle (all doors closed and locked) with a smart key in possession. (if equipped)

⚠ CAUTION

The electric type outside rearview mirror operates even though the ignition switch is in the LOCK position or the engine Start/Stop button is in the OFF position. However, to prevent unnecessary battery discharge, do not adjust the mirrors longer than necessary while the engine is not running.

⚠ CAUTION

In case it is an electric type outside rearview mirror, don't fold it by hand. It could cause motor failure.

INSTRUMENT CLUSTER

■ **Type A**

■ **Type B**

1. Hybrid system gauge
2. Fuel gauge
3. Speedometer
4. Warning and indicator lights
5. LCD window
6. Battery SOC (State of Charge) gauge
7. Distance To Empty

❊ For more details, refer to the "Gauges" in this chapter.

❊ The above illustration is a sample for explanation only. Actual instrument panel may be different. For specifics, please refer to the actual instrument panel in your car and relevant in this section.

ODE046100L/ODE046101L

Instrument Cluster Control

Adjusting Instrument Cluster Illumination (if equipped)

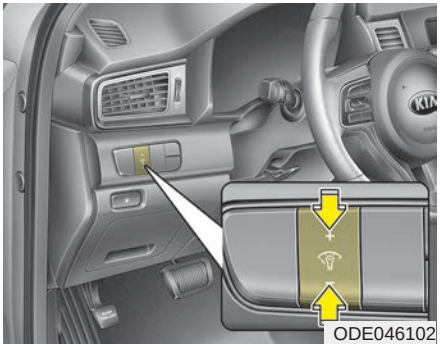

⚠ WARNING

Never adjust the instrument cluster while driving. This could result in loss of control and lead to an accident that may cause death, serious injury, or property damage.

The brightness of the instrument panel illumination is changed by pressing the illumination control button ("+" or "-") when the ignition switch or Engine Start/Stop button is ON, or the tail lights are turned on.

- If you hold the illumination control button ("+" or "-"), the brightness will be changed continuously.
- If the brightness reaches to the maximum or minimum level, an alarm will sound.

LCD window control

■ Type A

ODE046103

■ Type B

ODE046104

The LCD window modes can be changed by using the control buttons on the steering wheel.

(1) 🗐 : MODE button for change the LCD MODES

(2) ∧/∨ : MOVE scroll switch for select the items

(3) OK : SET/RESET button for set the items or reset the items

❊ For the LCD modes, refer to “LCD window” in this chapter.

Gauges

Speedometer

■ Type A (km/h)

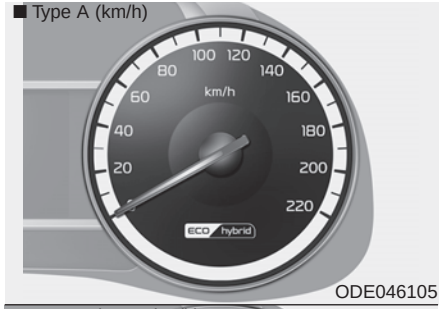

ODE046105

■ Type B (MPH, km/h)

ODE046105L

The speedometer indicates the speed of the vehicle and is calibrated in miles per hour (mph) and/or kilometers per hour (km/h).

Hybrid System Gauge

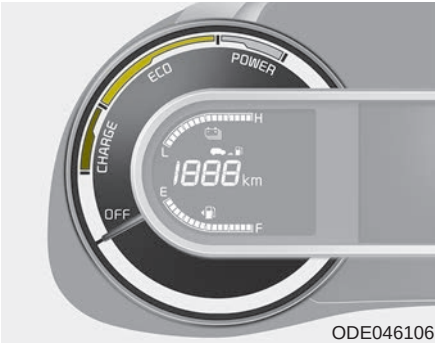

ODE046106

The hybrid system gauge indicates whether the current driving condition is fuel efficient or not.

- CHARGE : Shows that the energy made by the vehicle is being converted to electrical energy. (Regenerated energy)
- ECO : Shows that the vehicle is being driven in an Eco-friendly manner.
- POWER : Shows that the vehicle is exceeding the Eco-friendly range.

✻ NOTICE

Accordance to the hybrid system gauge area the "EV" indicator comes on or off.

- **"EV" indicator ON : Vehicle is driven using the electric motor or the gasoline engine is stopped.**
- **"EV" indicator OFF : Vehicle is driven using the gasoline engine.**

Hybrid Battery SOC (State of Charge) Gauge

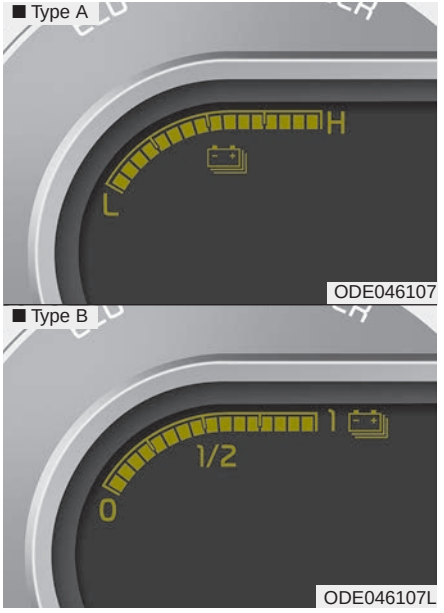

This gauge indicates the remaining hybrid battery power. If the SOC is near the "L (Low) or 0" level, the vehicle automatically operates the engine to charge the battery.

Fuel Gauge

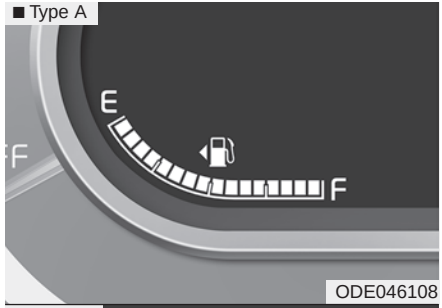

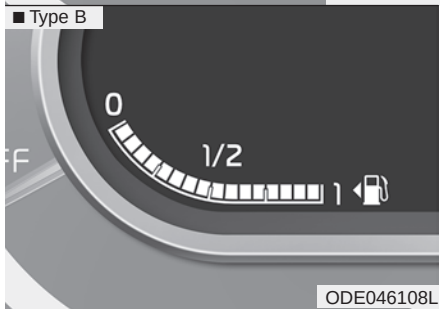

This gauge indicates the approximate amount of fuel remaining in the fuel tank.

✻ NOTICE

- **The fuel tank capacity is given in chapter 9.**
- **The fuel gauge is supplemented by a low fuel warning light, which will illuminate when the fuel tank is nearly empty.**
- **On inclines or curves, the fuel gauge pointer may fluctuate or the low fuel warning light may come on earlier than usual due to the movement of fuel in the tank.**

⚠ WARNING - Fuel Gauge

Running out of fuel can expose vehicle occupants to danger.

You must stop and obtain additional fuel as soon as possible after the warning light comes on or when the gauge indicator comes close to the "0 or E (Empty)" level.

⚠ CAUTION

Avoid driving with a extremely low fuel level. Running out of fuel could cause the engine to misfire damaging the catalytic converter.

Distance to empty

■ Type A

ODE046142L

■ Type B

ODE046109L

Distance To Empty

- The distance to empty is the estimated distance the vehicle can be driven with the remaining fuel.
  - Distance range: 1~9,999 km or 1~9,999 mi.
- If the estimated distance is below 1 km (1 mi.), the trip computer will display “---” as distance to empty.
- If the level of the remaining fuel is more than three-quarters, more than 3 liters of fuel must be refilled for the fuel gauge to change. In other cases, more than 6 liters of fuel must be refilled for the vehicle to change the fuel gauge.

✻ NOTICE

- **If the vehicle is not on level ground or the battery power has been interrupted, the distance to empty function may not operate correctly.**
- **The distance to empty may differ from the actual driving distance as it is an estimate of the available driving distance.**
- **The fuel economy and distance to empty may vary significantly based on driving conditions, driving habits, and condition of the vehicle.**

Odometer

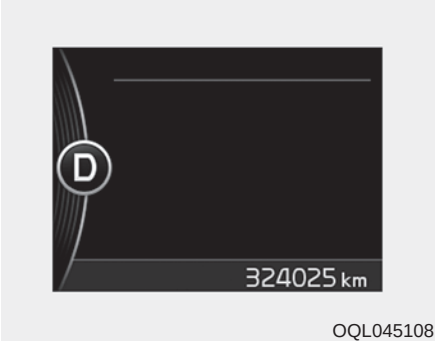

OQL045108

The odometer Indicates the total distance that the vehicle has been driven and should be used to determine when periodic maintenance should be performed.

- Odometer range : 0 ~ 1,599,999 km or 999,999 miles.

Outside Temperature Gauge

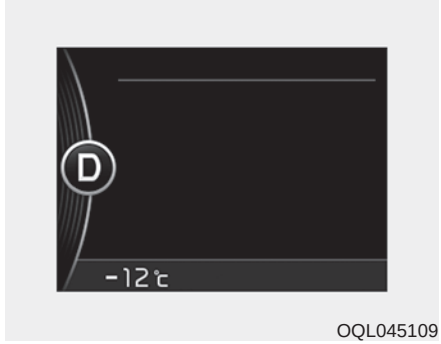

OQL045109

This gauge indicates the current outside air temperatures by 1°C (1°F).

- Temperature range : -40°C~ 60°C (-40°F ~ 140°F)

The outside temperature on the display may not change immediately like a general thermometer to prevent the driver from being inattentive.

The temperature unit can be changed by using the “User Settings” mode of the LCD window.

❊ For more details, refer to “LCD window” in this chapter.

Dual clutch transmission shift indicator

■ Drive mode

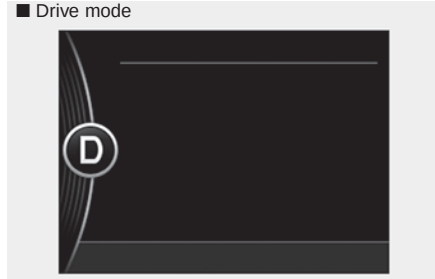

ODE046141L

■ Sports mode

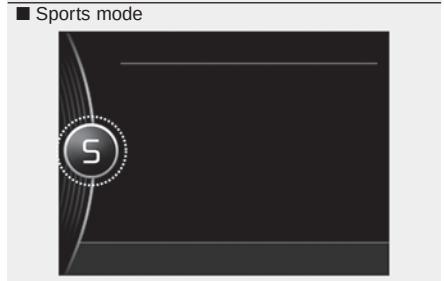

ODE046140L

This indicator displays which shift lever is selected.

- Park : P
- Reverse : R
- Neutral : N
- Drive : D
- Sports mode (if equipped) : S

Dual clutch transmission shift indicator in sports mode (for Europe, if equipped)

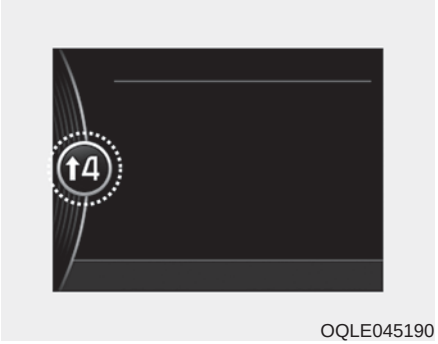

OQLE045190

If the driver selects “Sports mode” and changes gear, both higher and lower, the gear will automatically change to manual “Sports mode”. Depending on the selected gear, the gear display range will be from 1 to 6.

- Shifting up : ↑1, ↑2, ↑3, ↑4, ↑5
- Shifting down : ↓2, ↓3, ↓4, ↓5, ↓6

For example

↑3 : Display means the current gear is in 3 and needs to be changed to 4.

↓3 : Display means the current gear is in 3 and needs to be changed to 2.

When the system is not working properly, the indicator is not displayed.

LCD WINDOWS (IF EQUIPPED)

Over view

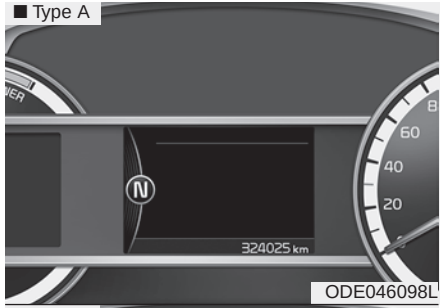

ODE046098L

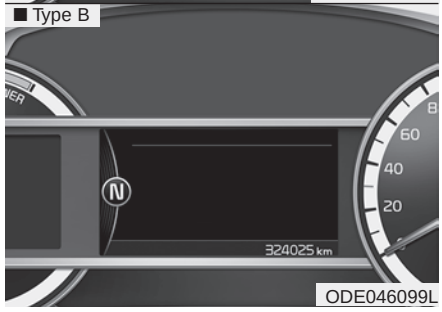

ODE046099L

LCD windows show the following various information to drivers.

- Trip information
- LCD modes
- Warning messages

Trip information (Trip computer)

The trip computer is a microcomputer-controlled driver information system that displays information related to driving.

✻ NOTICE

Some driving information stored in the trip computer (for example Average Vehicle Speed) resets if the battery is disconnected.

Trip Modes

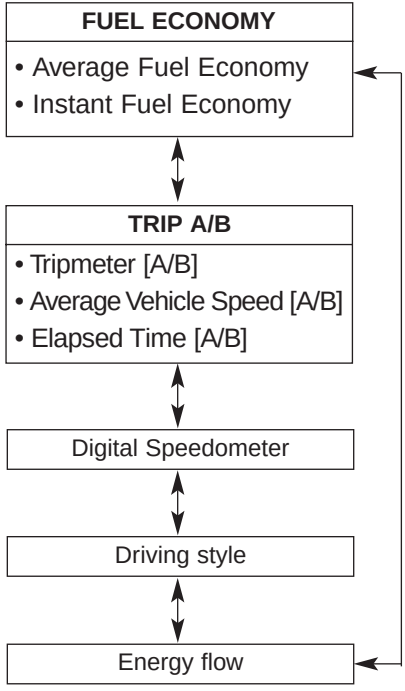

To change the trip mode, scroll the MOVE scroll switch (∧/∨) in the trip computer mode.

Fuel Economy

ODE046138L

Average Fuel Economy (1)

- The average fuel economy is calculated by the total driving distance and fuel consumption since the last average fuel economy reset.
  - Fuel economy range : 0.0 ~ 99.9 km/L, L/100Km or MPG
- The average fuel economy can be reset both manually and automatically.

Manual reset

To clear the average fuel economy manually, press the OK button (reset) on the steering wheel for more than 1 second when the average fuel economy is displayed.

Automatic reset

To make the average fuel economy be reset automatically whenever refueling, select the “Fuel economy auto reset” mode in User Setting menu of the LCD display (Refer to “LCD window”).

- OFF - You may set to default manually by using the trip switch reset button.
- After ignition - The vehicle will automatically set to default once 4 hours pass after the Engine start/stop button is turned to the OFF position.
- After refueling - After refueling more than 6 liters and driving over 1km/h, the vehicle will reset to default automatically.

✻ NOTICE

The average vehicle speed is not displayed, when the vehicle drives shorter than 300 meters (0.19 miles) or less than 10 seconds after turning ON the Engine Start/Stop button.

Instant Fuel Economy (2)

- This mode displays the instant fuel economy during the last few seconds when the vehicle speed is more than 10 km/h (6.2 MPH).
  - Fuel economy range : 0.0 ~ 30 L/100km or 0.0 ~ 50.0 MPG

Trip A/B

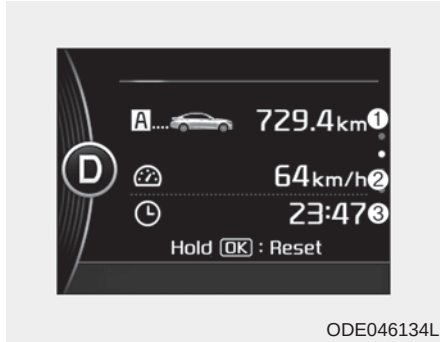

ODE046134L

Tripmeter (1)

- The tripmeter is the total driving distance since the last tripmeter reset.
  - Distance range: 0.0 ~ 9999.9 km or mi.
- To reset the tripmeter, press the OK button (reset) on the steering wheel for more than 1 second when the tripmeter is displayed.

Average Vehicle Speed (2)

- The average vehicle speed is calculated by the total driving distance and driving time since the last average vehicle speed reset.
  - Speed range: 0 ~ 999 km/h or MPH
- To reset the average vehicle speed, press the OK button (reset) on the steering wheel for more than 1 second when the average vehicle speed is displayed.

✻ NOTICE

- **The average vehicle speed is not displayed if the driving distance has been less than 50 meters (0.03 miles) or the driving time has been less than 10 seconds since the ignition switch or Engine Start/Stop button was turned to ON.**
- **Even if the vehicle is not in motion, the average vehicle speed keeps going while the engine is running.**

Elapsed Time (3)

- The elapsed time is the total driving time since the last elapsed time reset.
  - Time range (hh:mm): 00:00 ~ 99:59
- To reset the elapsed time, press the OK button (reset) on the steering wheel for more than 1 second when the elapsed time is displayed.

✻ NOTICE

Even if the vehicle is not in motion, the elapsed time keeps going while the engine is running.

Digital speedometer

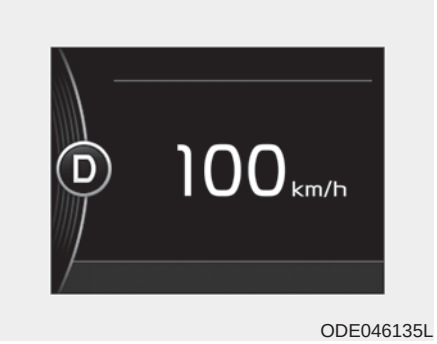

ODE046135L

This mode displays the current speed of the vehicle.

One time driving information mode

ODE046143L

This display shows trip distance (1), average fuel economy (2) and the vehicle can be driven with the remaining fuel (3).

This information is displayed for a few seconds when you turn off the engine and then goes off automatically. The information provided is calculated according to each trip.

If the estimated distance is below 1km (1mi.), the distance to empty (3) will display as “---”.

When low fuel warning light (⛽) illuminates in the cluster, the refuel message will appear(4).

Energy flow

Kia hybrid system notifies the drivers of energy flow in various operating modes. Eleven Modes show drivers the current operating condition.

EV Propulsion

ODE046121L

Electric power is used to move the vehicle. (Battery → Wheel)

Engine Only Propulsion

ODE046123L

Engine power is used to move the vehicle. (Engine → Wheel)

Vehicle Stop

ODE046120L

The mode means the vehicle at stop.

(There is no energy flow.)

Power Assist

ODE046122L

Electric and Engine power are used to move the vehicle.

(Battery & Engine → Wheel)

Engine Generation

ODE046124L

Vehicle is stopped with the Engine charging the hybrid battery.

(Engine → Battery)

Regeneration

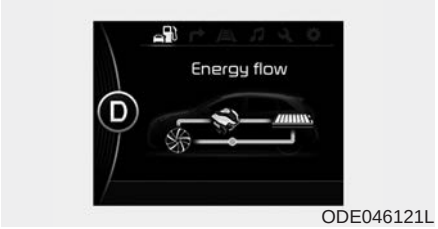

ODE046121L

Hybrid battery is being charged by regenerative braking.

(Wheel → Battery)

Power Reserve

ODE046127L

Engine is both driving the vehicle and charging the hybrid battery.

(Engine → Wheel & Battery)

Engine Generation/Regeneration

ODE046128L

The engine and regenerative braking system charge the hybrid battery driving deceleration.

(Engine & Wheel → Battery)

Engine Brake

ODE046126L

The vehicle is being slowed by engine compression.

(Wheel → Engine)

Engine Generation/Motor Drive

ODE046128L

The vehicle is being slowed by engine compression and regenerative braking. The hybrid battery is being charged by regenerative braking.

(Engine → Battery → Wheel)

Engine Brake/Regeneration

ODE046122L

The engine compression can be used to slow the vehicle. The regenerative braking system can be used to charge the hybrid system.

(Wheel → Engine & Battery)

LCD Modes

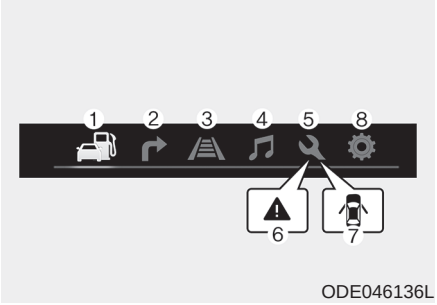

ODE046136L

(1) Trip Computer mode

This mode displays driving information like the tripmeter, fuel economy, and so on.

❊ For more details, refer to “Trip Computer” in this chapter.

(2) Turn By Turn mode (if equipped)

This mode displays the state of the navigation.

(3) LKAS/SCC mode (if equipped)

This mode displays the state of the Lane Keeping Assist System (LKAS) and Smart Cruise Control (SCC).

(4) Audio mode (if equipped)

This mode displays the state of the A/V system.

(5) Service mode

This mode informs of service interval (mileage or days) and pressure status of each tire.

(6) Master warning mode

This mode informs of warning messages related to washer fluid or malfunction of Blind Spot Detection system (BSD) and so on.

(7) Door open mode

When the any door is not closed securely, this symbol illuminated.

(8) User settings mode

On this mode, you can change setting of the doors, lamps, and so on.

❊ For controlling the LCD modes, refer to “LCD window Control” in this chapter.

Turn By Turn Mode (if equipped)

OJF045223L

This mode displays the state of the navigation.

A/V Mode (if equipped)

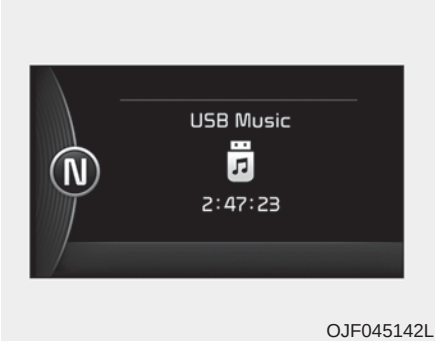

OJF045142L

This mode displays the state of the A/V system.

Tire Pressure (if equipped)

OJF045292L

This mode displays the pressure status of each tire.

You can change the tire pressure unit in “User settings” mode.

❈ For more details, refer to “User Settings mode” in this chapter.

Service Mode

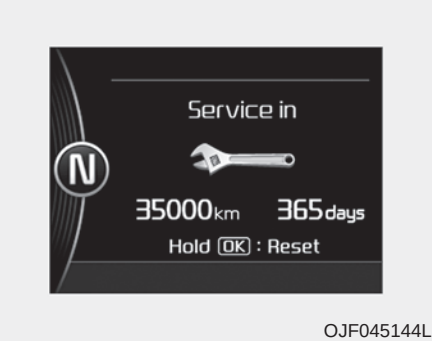

OJF045144L

Service in

It calculates and displays when you need a scheduled maintenance service (mileage or days).

If the remaining mileage or time reaches 1,500 km (900 mi.) or 30 days, “Service in” message is displayed for several seconds each time you set the ignition switch or Engine Start/Stop Button to the ON position.

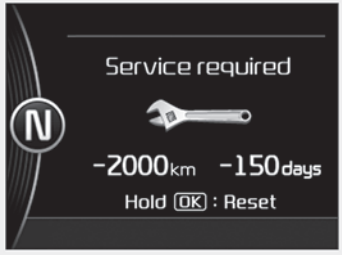

OJF45294L

Service required

If you do not have your vehicle serviced according to the already inputted service interval, “Service required” message is displayed for several seconds each time you set the ignition switch or Engine Start/Stop Button to the ON position.

To reset the service interval to the mileage and days you inputted before:

- Activate the reset mode by pressing the OK button (reset) for more than 5 second, then press the OK button (reset) again for more than 1 second (Europe).
- Press the OK button (reset) for more than 1 second (Except Europe).

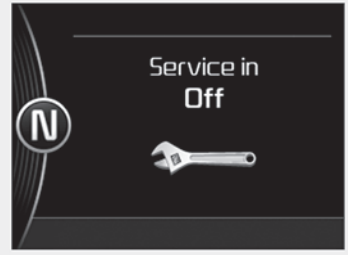

OJF045295L

Service in OFF

If the service interval is not set, “Service in OFF” message is displayed on the LCD window.

✻ NOTICE

If any of the following conditions occurs, the mileage and days may be incorrect.

- The battery cable is disconnected.
- The fuse switch is turned off.
- The battery is discharged.

User Settings Mode

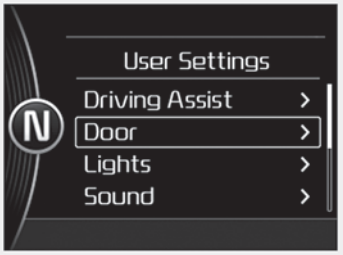

OJF045148L

On this mode, you can change setting of the doors, lamps, and so on.

⚠ WARNING

Do not adjust the User Setting while driving. You may lose your steering control and cause severe personal injury or accidents.

Driving Assist (if equipped)

- Lane Keeping Assist System (LKAS, if equipped) :

  To adjust the sensitivity of the Lane Keeping Assist System.

  - Lane Departure/Standard LKA/Activ LKA

❊ For more information, refer to the "Lane Keep Assist System" in chapter 6.

- Smart cruise control (if equipped) : To adjust the sensitivity of the Smart Cruise Control system.

  - Slow/Normal/Fast

❊ For more information, refer to the "Smart Cruise Control" in chapter 6.

- Assist Emergency Braking system (AEB,if equipped) :

  To activate or deactivate the Assist Emergency Braking (AEB).

❊ For more information, refer to "Assist Emergency Braking (AEB)" in chapter 6.

- Forward Collision Warning (FCW, if equipped) :

  To adjust the initial warning alert time for Assist Emergency Braking system.

  - Late/Normal/Early

❊ For more information, refer to "Assist Emergency Braking (AEB)" in chapter 6.

- Rear Collision Warning (RCW,if equipped)

  - Rear Cross Traffic Alert : To activate or deactivate the Rear Cross Traffic Alert system.

❊ For more information, refer to "Blind Spot Detection" in chapter 6.

  - Blind Spot Detection sound : To activate or deactivate the Blind Spot Detection sound.

❊ For more information, refer to "Blind Spot Detection" in chapter 6.

- Coasting guide (if equipped)
  - Coasting guide : To activate or deactivate the Coasting guide.
  - Sound : To activate or deactivate the Coasting guide sound.
  - Start coasting : To adjust the initial guiding time for Coasting guide.

Door

- Automatically Lock
  - Disable : The auto door lock operation will be canceled.
  - Enable on Speed : All doors will be automatically locked when the vehicle speed exceeds 15km/h (9.3 mph).
  - Enable on Shift: All doors will be automatically locked if the transmission shift lever is shifted from the P (Park) position to the R (Reverse), N (Neutral), or D (Drive) position.
- Automatically Unlock
  - Disable : The auto door unlock operation will be canceled.
  - Vehicle Off : All doors will be automatically unlocked when the Engine Star/Stop button is set to the OFF position.
  - Driver Door Unlock : All doors will be automatically unlocked when the driver's door is unlocked.
  - On Shift to P : All doors will be automatically unlocked if the shift lever is shifted to the P (Park) position.

Lights

- One Touch Turn Signal
  - Off : The one touch turn signal function will be deactivated.
  - 3, 5, 7 Flashes : The lane change signals will blink 3, 5, or 7 times when the turn signal lever is moved slightly.

❈ For more details, refer to “Light” in this chapter.

- Head Lamp Delay (if equipped)

  If this item checked, the head lamp delay function will be activated.
- Welcome Light (if equipped)

  If this item checked, the welcome light function will be activated.

Sound

- Park Assist System Vol. (if equipped) : Adjust the Park Assist System volume. (Level 1 ~ 3)

Convenience

- Seat Easy Access (if equipped)
  - None : The seat easy access function will be deactivated.
  - Normal/Enhanced : When you turn off the engine, the driver's seat will automatically move rear 7.6 cm (Enhanced) for you to enter or exit the vehicle more comfortably. If you change the Engine Start/Stop Button from OFF position to the AC function, the driver's seat will return to the original position.

❊ For more details, refer to "Driver Position Memory System" in chapter 3.

- Wireless smart phone charging system (if equipped) : If this item checked, the Wireless smart phone charging system will be activated.
- Wiper/Light Display (if equipped) : If this item checked, the Wiper/Light Display will be activated.

Service interval

- Service Interval : On this mode, you can activate the service interval function with mileage (km or mi.) and period (months).
  - Off : The service interval function will be deactivated.
  - On : You can set the service interval (mileage and months).

Other Features

- Fuel Economy Auto Reset
  - Off : The average fuel economy will not reset automatically whenever refueling.
  - On (Auto Reset) : The average fuel economy will reset automatically when refueling.

❊ For more details, refer to "Trip Computer" in this chapter.

- Fuel Economy Unit : Choose the fuel economy unit. (Km/L, L/100)
- Temperature Unit : Choose the temperature unit. (°C, °F)
- Tire Pressure Unit (if equipped) : Choose the tire pressure unit. (psi, kPa, Bar)
- Language : Choose the language.

Coasting guide (if equipped)

A chime will sound and the coasting guide indicator will blink four times to inform the driver when to take the foot off from the accelerator by anticipating a decelerating event* based on the analysis of driving routes and road conditions of the navigation. It encourages the driver to remove foot from the pedal and allow coasting down the road with EV motor only. This helps prevent unnecessary fuel consumption and increases fuel efficiency.

❈ Example of a deceleration event is going down an extended hill, slowing down approaching a toll booth, and approaching reduced speed zones.

• User settings

Press the Engine Start/Stop button and put the shift lever in P(Park). In the User Settings Mode, select Driving Assist, Coasting Guide, and then On to turn on the system. Cancel the selection of coasting guide to turn off the system. For the explanation of the system, press and hold the [OK] button.

• Operation conditions

To activate the system, take the following procedures. Enter your destination information on the navigation and select the driving route. Select the ECO mode in the Integrated Driving Control System. Then, satisfy the following.

- The driving speed should be between 60 km/h(37 mph) and 160 km/h(99 mph).

❈ The operating speed may vary due to difference between instrument cluster and navigation effected by tire inflation level.

Warning messages

Warning messages appear on the LCD to warn the driver. It is located in the center of the instrument cluster.

The warning message may appear differently depending on the type of instrument cluster and some may not show the warning message at all.

The warning message is shown in either symbol, symbol and text, or text type only. You can choose the preferred language by selecting the User setting menu in LCD mode.

ODE046116

Door Open

- It means that any door is open.

ODE046117

Tailgate Open

- It means that the tailgate is open.

ODE046118

Hood Open

- It means that hood is open.

ODE046119

Sunroof Open (if equipped)

- This warning is displayed if you turn off the engine when the sunroof is open.

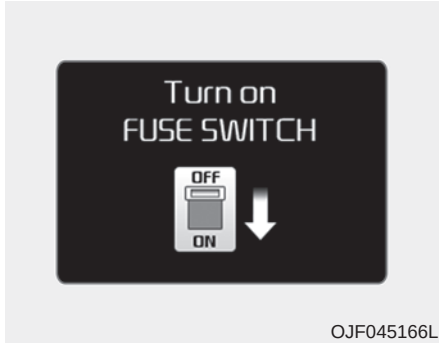

OJF045166L

Turn on FUSE SWITCH (if equipped)

- This warning message illuminates if the fuse switch under the steering wheel is OFF.
- It means that you should turn the fuse switch on.

❊ For more details, refer to “Fuses” in chapter 8.

ODE046137L

Engine has overheated

This warning message illuminates when the engine coolant temperature is above 120°C (248°F). This means that the engine is overheated and may be damaged.

If your vehicle is overheated, refer to “Overheating” in chapter 7.

Shift to P (for smart key system)

- This warning message illuminates if you try to turn off the engine without the shift lever in P (Park) position.
- At this time, the Engine Start/Stop Button turns to the ACC position (If you press the Engine Start/Stop Button once more, it will turn to the ON position).

Low Key Battery (for smart key system)

- This warning message illuminates if the battery of the smart key is discharged when the Engine Start/Stop Button changes to the OFF position.

Press START button while turn steering (for smart key system)

- This warning message illuminates if the steering wheel does not unlock normally when the Engine Start/Stop Button is pressed.
- It means that you should press the Engine Start/Stop Button while turning the steering wheel right and left.

Steering wheel unlocked (for smart key system)

- This warning message illuminates if the steering wheel does not lock when the Engine Start/Stop Button changes to the OFF position.

Check Steering Wheel Lock System (for smart key system)

- This warning message illuminates if the steering wheel does not lock normally when the Engine Start/Stop Button changes to the OFF position.

Press brake pedal to start engine (for smart key system)

- This warning message illuminates if the Engine Start/Stop Button changes to the ACC position twice by pressing the button repeatedly without depressing the brake pedal.
- It means that you should depress the brake pedal to start the engine.

Key not in vehicle (for smart key system)

- This warning message illuminates if the smart key is not in the vehicle when you press the Engine Start/Stop Button.
- It means that you should always have the smart key with you.

Key not detected (for smart key system)

- This warning message illuminates if the smart key is not detected when you press the Engine Start/Stop Button.

Press START button again (for smart key system)

- This warning message illuminates if you can not operate the Engine Start/Stop Button when there is a problem with the Engine Start/Stop Button system.
- It means that you could start the engine by pressing the Engine Start/ Stop Button once more.
- If the warning illuminates each time you press the Engine Start/Stop Button, we recommend that you have the vehicle inspected by an authorized Kia dealer.

Press START button with smart key (for smart key system)

- This warning message illuminates if you press the Engine Start/Stop Button while the warning message “Key not detected” is illuminating.
- At this time, the immobilizer indicator light blinks.

Check fuse "BRAKE SWITCH" (for smart key system)

- This warning message illuminates if the brake switch fuse is disconnected.
- It means that you should replace the fuse with a new one. If that is not possible, you can start the engine by pressing the Engine Start/Stop Button for 10 seconds in the ACC position.

Shift to P or N to start engine (for smart key system)

- This warning message illuminates if you try to start the engine with the shift lever not in the P (Park) or N (Neutral) position.

✻ NOTICE

You can start the engine with the shift lever in the N (Neutral) position. But, for your safety, we recommend that you start the engine with the shift lever in the P (Park) position.

Low Washer Fluid

- This warning message illuminates on the service reminder mode if the washer fluid level in the reservoir is nearly empty.
- It means that you should refill the washer fluid.

Low Fuel

- This warning message illuminates if the fuel tank is nearly empty.
  - When the low fuel level warning light is illuminates.

  Add fuel as soon as possible.

Device in wireless charger (if equipped)

If a smart phone is still left on the wireless charging pad unattended, even when the Engine start/stop button is turned to the ACC or OFF position. And the instrument panel's one time driving information mode has finished, a warning message will lit up on the instrument panel.

❊ For more details, refer to "Smart Phone Wireless Charger" in this chapter.

Check Hybrid system

This warning message illuminates when there is a problem with the hybrid control system.

Refrain from driving when the warning message is displayed.

In this case, we recommend that you have your vehicle inspected by an authorized Kia dealer.

Check Hybrid system. Turn off engine.

This warning message illuminates when there is a problem with the hybrid system. The "" indicator will blink and a warning chime will sound until the problem is solved.

In this case, we recommend that you have your vehicle inspected by an authorized Kia dealer.

Check Hybrid system. Do not start engine.

This warning message illuminates when the hybrid battery power (SOC) level is low. A warning chime will sound until the problem is solved.

In this case, we recommend that you have your vehicle inspected by an authorized Kia dealer.

Stop vehicle and check power supply

This warning message illuminates when a failure occurs in the power supply system.

In this case, park the vehicle in a safe location and recommend that you tow your vehicle to the nearest authorized Kia dealer and have the vehicle inspected.

Stop vehicle to charge battery

This warning message illuminates when the hybrid battery power (SOC) level is low.

In this case, park the vehicle in a safe location and wait until the hybrid battery is charged.

Refuel to prevent Hybrid battery damage

This warning message illuminates when the fuel tank is nearly empty.

You should refill the fuel tank to prevent hybrid battery damage.

Refill inverter coolant

This warning message illuminates when the inverter coolant is nearly empty.

You should refill the inverter coolant.

Check brakes

This warning message illuminates when the brake performance is low or the regenerative brake does not work properly due to a failure in the brake system.

In this case, it may take longer for the brake pedal to operate and the braking distance may become longer.

Stop vehicle and check brakes

This warning message is displayed when a failure occurs in the brake system.

In this case, we recommend that you park the vehicle in a safe location and tow your vehicle to the nearest authorized Kia dealer and have the vehicle inspected.

WARNING AND INDICATOR LIGHTS

Warning lights

✻ NOTICE - Warning lights

Make sure that all warning lights are OFF after starting the engine. If any light is still ON, this indicates a situation that needs attention.

Hybrid system warning light

This warning light illuminates:

When there is a malfunction with the hybrid system.

In this case, we recommend that you have the vehicle inspected by an authorized Kia dealer.

Air bag Warning Light

This warning light illuminates:

- Once you set the ignition switch or Engine Start/Stop Button to the ON position.
  - It illuminates for approximately 6 seconds and then goes off.
- When there is a malfunction with the SRS.

  In this case, we recommend that you have the vehicle inspected by an authorized Kia dealer.

Seat Belt Warning Light

This warning light informs the driver that the seat belt is not fastened.

✻ For more details, refer to the “Seat Belts” in chapter 3.

Parking Brake & Brake Fluid Warning Light

This warning light illuminates:

- Once you set the ignition switch or Engine Start/Stop Button to the ON position.
  - It illuminates for approximately 3 seconds
  - It remains on if the parking brake is applied.
- When the parking brake is applied.
- When the brake fluid level in the reservoir is low.
  - If the warning light illuminates with the parking brake released, it indicates the brake fluid level in reservoir is low.

If the brake fluid level in the reservoir is low:

1. Drive carefully to the nearest safe location and stop your vehicle.
2. With the engine stopped, check the brake fluid level immediately and add fluid as required (For more details, refer to “Brake Fluid” in chapter 8). Then check all brake components for fluid leaks. If any leak on the brake system is still found, the warning light remains on, or the brakes do not operate properly, do not drive the vehicle.

   In this case, we recommend that you have the vehicle towed to an authorized Kia dealer and inspected.

Dual-diagonal braking system

Your vehicle is equipped with dual-diagonal braking systems. This means you still have braking on two wheels even if one of the dual systems should fail.

With only one of the dual systems working, more than normal pedal travel and greater pedal pressure are required to stop the vehicle.

Also, the vehicle will not stop in as short a distance with only a portion of the brake system working.

If the brakes fail while you are driving, shift to a lower gear for additional engine braking and stop the vehicle as soon as it is safe to do so.

⚠ WARNING
- Parking Brake & Brake Fluid Warning Light

Driving the vehicle with a warning light ON is dangerous. If the Parking Brake & Brake Fluid Warning Light illuminates with the parking brake released, it indicates that the brake fluid level is low.

In this case, we recommend that you have the vehicle inspected by an authorized Kia dealer.

Anti-lock Brake System (ABS) Warning Light

This warning light illuminates:

- Once you set the ignition switch or Engine Start/Stop Button to the ON position.
  - It illuminates for approximately 3 seconds and then goes off.
- When there is a malfunction with the ABS (The normal braking system will still be operational without the assistance of the anti-lock brake system).

  In this case, we recommend that you have the vehicle inspected by an authorized Kia dealer.

Electronic Brake force Distribution (EBD) System Warning Light

These two warning lights illuminate at the same time while driving:

- When the ABS and regular brake system may not work normally.

  In this case, we recommend that you have the vehicle inspected by an authorized Kia dealer.

⚠ WARNING - Electronic Brake force Distribution (EBD) System Warning Light

When both ABS and Parking Brake & Brake Fluid Warning Lights are on, the brake system will not work normally and you may experience an unexpected and dangerous situation during sudden braking.

In this case, avoid high speed driving and abrupt braking.

We recommend you have the vehicle inspected by an authorized Kia dealer as soon as possible.

Regenerative Brake Warning Light

This warning light illuminates :

When the regenerative brake does not operate and the brake does not perform well. This causes the Brake Warning light (red) and Regenerative Brake Warning Light (yellow) to illuminate simultaneously.

In this case, drive safely and we recommend that you have your vehicle inspected by an authorized Kia dealer.

The operation of the brake pedal may be more difficult than normal and the braking distance can increase.

✻ NOTICE - Electronic Brake force Distribution (EBD) System Warning Light

When the ABS Warning Light is on or both ABS and Parking Brake & Brake Fluid Warning Lights are on, the speedometer, odometer, or tripmeter may not work. Also, the EPS Warning Light may illuminate and the steering effort may increase or decrease.
In this case, we recommend you have the vehicle inspected by an authorized Kia dealer as soon as possible.

Electronic Power Steering (EPS) Warning Light

This warning light illuminates:

- Once you set the ignition switch or Engine Start/Stop Button to the ON position.
  - It remains on until the engine is started.
- When there is a malfunction with the EPS.

  In this case, we recommend that you have the vehicle inspected by an authorized Kia dealer.

Malfunction Indicator Lamp (MIL)

This warning light illuminates:

- Once you set the ignition switch or Engine Start/Stop Button to the ON position.
  - It remains on until the engine is started.
- When there is a malfunction with the emission control system.

  In this case, we recommend that you have the vehicle inspected by an authorized Kia dealer.

⚠ CAUTION - Malfunction Indicator Lamp (MIL)

Driving with the Malfunction Indicator Lamp (MIL) on may cause damage to the emission control systems which could affect drivability and/or fuel economy.

⚠ CAUTION - Gasoline Engine

If the Malfunction Indicator Lamp (MIL) illuminates, potential catalytic converter damage is possible which could result in loss of engine power.

In this case, we recommend that you have the vehicle inspected by an authorized Kia dealer as soon as possible.

Charging System Warning Light

This warning light illuminates:

- Once you set the ignition switch or Engine Start/Stop Button to the ON position.
  - It remains on until the engine is started.
- When there is a malfunction with either the alternator or electrical charging system.

If there is a malfunction with either the alternator or electrical charging system:

1. Drive carefully to the nearest safe location and stop your vehicle.
2. Turn the engine off and check the alternator drive belt for looseness or breakage.

   If the belt is adjusted properly, there may be a problem in the electrical charging system.

   In this case, we recommend that you have the vehicle inspected by an authorized Kia dealer as soon as possible.

Engine Oil Pressure Warning Light

This warning light illuminates:

- Once you set the ignition switch or Engine Start/Stop Button to the ON position.
  - It remains on until the engine is started.
- When the engine oil pressure is low.

If the engine oil pressure is low:

1. Drive carefully to the nearest safe location and stop your vehicle.
2. Turn the engine off and check the engine oil level (For more details, refer to “Engine Oil” in chapter 8). If the level is low, add oil as required.

   If the warning light remains on after adding oil or if oil is not available, we recommend that you have the vehicle inspected by an authorized Kia dealer as soon as possible.

⚠ CAUTION - Engine Oil Pressure Warning Light

- ***If the engine does not stop immediately after the Engine Oil Pressure Warning Light is illuminated, severe damage could result.***
- ***If the warning light stays on while the engine is running, it indicates that there may be serious engine damage or malfunction. In this case,***
  1. ***Stop the vehicle as soon as it is safe to do so.***
  2. ***Turn off the engine and check the oil level. If the oil level is low, fill the engine oil to the proper level.***
  3. ***Start the engine again. If the warning light stays on after the engine is started, turn the engine off immediately. In this case, we recommend that you have the vehicle inspected by an authorized Kia dealer.***

Low Fuel Level Warning Light

This warning light illuminates:

When the fuel tank is nearly empty.

If the fuel tank is nearly empty:

Add fuel as soon as possible.

⚠ CAUTION - Low Fuel Level

Driving with the Low Fuel Level warning light on or with the fuel level below “0 or E” can cause the engine to misfire and damage the catalytic converter (if equipped).

Low Tire Pressure Warning Light (if equipped)

This warning light illuminates:

- Once you set the ignition switch or Engine Start/Stop Button to the ON position.
  - It illuminates for approximately 3 seconds and then goes off.
- When one or more of your tires are significantly underinflated.

❊ For more details, refer to “Tire Pressure Monitoring System (TPMS)” in chapter 7.

This warning light remains on after blinking for approximately 60 seconds or repeats blinking and off at the intervals of approximately 3 seconds:

- When there is a malfunction with the TPMS.

  In this case, we recommend that you have your vehicle inspected by an authorized Kia dealer as soon as possible.

❊ For more details, refer to “Tire Pressure Monitoring System (TPMS)” in chapter 7.

⚠ WARNING - Low tire pressure

- **Significantly low tire pressure makes the vehicle unstable and can contribute to loss of vehicle control and increased braking distances.**
- **Continued driving or low pressure tires will cause the tires to overheat and fail.**

⚠ WARNING - Safe Stopping

- **The TPMS cannot alert you to severe and sudden tire damage caused by external factors.**
- **If you notice any vehicle instability, immediately take your foot off the accelerator pedal, apply the brakes gradually with light force, and slowly move to a safe position off the road.**

Master Warning Light

- This warning light informs the driver the following situations
- Blind Spot Detection fail
- Smart Cruise Control fail
- Blind Spot Detection automatic cancelation
- Smart Cruise Control radar fail
- Engine oil shortage and so on

The Master Warning Light illuminates when more than one of the above warning situations occur. If the warning situation is solved, the mas ter warning light will turn off.

Engine Coolant Temperature Warning Light

This warning light illuminates:

- When the engine coolant temperature is above 120°C (248°F). This means that the engine is overheated and may be damaged.

  If your vehicle is overheated, refer to “Overheating” in chapter 7.

CAUTION - Engine Overheating

Do not continue driving with the engine overheated. Otherwise engine may be damaged.

Overspeed Warning Light (if equipped)

This warning light blinks:

- When you drive the vehicle more than 120 km/h.
  - This is to prevent you from driving your vehicle with overspeed.
  - The overspeed warning chime also sound for approximately 5 seconds.

Assist Emergency Braking (AEB) Warning light (if equipped)

This indicator light illuminates:

- When there is a malfunction with the AEB.

  In this case, we recommend that you have the vehicle inspected by an authorized Kia dealer.

Indicator Lights

Electronic Stability Control (ESC) Indicator Light (if equipped)

This indicator light illuminates:

- Once you set the ignition switch or Engine Start/Stop Button to the ON position.
  - It illuminates for approximately 3 seconds and then goes off.
- When there is a malfunction with the ESC system.

  In this case, we recommend that you have the vehicle inspected by an authorized Kia dealer.

This indicator light blinks:

While the ESC is operating.

❊ For more details, refer to “Electronic Stability Control (ESC)” in chapter 6.

Electronic Stability Control (ESC) OFF Indicator Light (if equipped)

This indicator light illuminates:

- Once you set the ignition switch or Engine Start/Stop Button to the ON position.
  - It illuminates for approximately 3 seconds and then goes off.
- When you deactivate the ESC system by pressing the ESC OFF button.

❊ For more details, refer to “Electronic Stability Control (ESC)” in chapter 6.

Immobilizer Indicator Light (Without Smart Key) (if equipped)

This indicator light illuminates:

- When the vehicle detects the immobilizer in your key properly while the ignition switch is ON.
  - At this time, you can start the engine.
  - The indicator light goes off after starting the engine.

This indicator light blinks:

- When there is a malfunction with the immobilizer system.

  In this case, we recommend that you have the vehicle inspected by an authorized Kia dealer.

Immobilizer Indicator Light (With Smart Key) (if equipped)

This indicator light illuminates for up to 30 seconds:

- When the vehicle detects the smart key in the vehicle properly while the Engine Start/Stop Button is ACC or ON.
  - At this time, you can start the engine.
  - The indicator light goes off after starting the engine.

This indicator light blinks for a few seconds:

- When the smart key is not in the vehicle.
  - At this time, you can not start the engine.

This indicator light illuminates for 2 seconds and goes off:

- When the vehicle can not detect the smart key which is in the vehicle while the Engine Start/Stop Button is ON.

  In this case, we recommend that you have the vehicle inspected by an authorized Kia dealer.

This indicator light blinks:

- When the battery of the smart key is weak.
  - At this time, you can not start the engine. However, you can start the engine if you press the Engine Start/Stop Button with the smart key. (For more details, refer to “Starting the Engine” in chapter 6).
- When there is a malfunction with the immobilizer system.

  In this case, we recommend that you have the vehicle inspected by an authorized Kia dealer.

Turn Signal Indicator Light

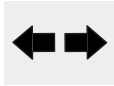

This indicator light blinks:

- When you turn the turn signal light on.

If any of the following occurs, there may a malfunction with the turn signal system. In this case, we recommend that you have the vehicle inspected by an authorized Kia dealer.

- The indicator light does not blink but illuminates.
- The indicator light blinks more rapidly.
- The indicator light does not illuminate at all.

Low Beam Indicator Light (if equipped)

This indicator light illuminates:

- When the headlights are on.

High Beam Indicator Light

This indicator light illuminates:

- When the headlights are on and in the high beam position
- When the turn signal lever is pulled into the Flash-to-Pass position.

Light ON Indicator Light

This indicator light illuminates:

- When the tail lights or headlights are on.

Front Fog Indicator Light (if equipped)

This indicator light illuminates:

- When the front fog lights are on.

Rear Fog Indicator Light (if equipped)

This indicator light illuminates:

- When the rear fog lights are on.

EV Mode Indicator

This indicator illuminates when the vehicle is driven by the electric motor.

Ready Indicator

This indicator illuminates :

When the vehicle is ready to be driven.

- ON : Normal driving is possible.
- OFF : Normal driving is not possible, or a problem has occurred.
- Blinking : Emergency driving.

When the ready indicator goes OFF or blinks, there is a problem with the system. In this case, we recommend that you have your vehicle inspected by an authorized Kia dealer.

LKAS (Lane Keeping Assistant System) Indicator (if equipped)

The LKAS indicator will illuminate when you turn the lane keeping assistant system on by pressing the LKAS button.

If there is a problem with the system, the yellow LKAS indicator will illuminate.

❊ For more details, refer to “LKAS” in chapter 6.

Cruise Indicator Light (if equipped)

This indicator light illuminates:

- When the cruise control system is enabled.

❊ For more details, refer to “Cruise Control System” in chapter 6.

Cruise SET Indicator Light (if equipped)

This indicator light illuminates:

- When the cruise control speed is set.

❊ For more details, refer to “Cruise Control System” in chapter 6.

SPORT Mode Indicator Light (if equipped)

This indicator light illuminates:

- When you select “SPORT” mode as drive mode.

❊ For more details, refer to “Drive Mode Integrated Control System” in chapter 6.

ECO Mode Indicator Light (if equipped)

This indicator light illuminates:

- When you select “ECO” mode as drive mode.

❊ For more details, refer to “Drive Mode Integrated Control System” in chapter 6.

REAR PARKING ASSIST SYSTEM (IF EQUIPPED)

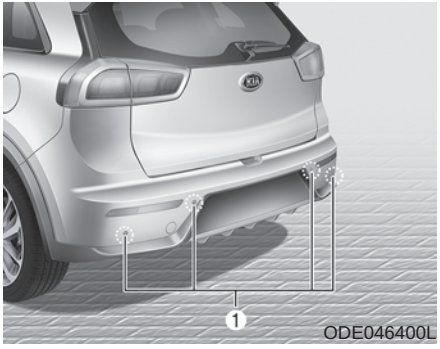

The rear parking assist system assists the driver during backward movement of the vehicle by chiming if any object is sensed within a distance of 120 cm (47 in.) behind the vehicle.

This system is a supplemental system and it is not intended to nor does it replace the need for extreme care and attention of the driver. The sensing range and objects detectable by the back sensors (①) are limited. Whenever backing-up, pay as much attention to what is behind you as you would in a vehicle without a rear parking assist system.

⚠ WARNING

The rear parking assist system is a supplementary function only. The operation of the rear parking assist system can be affected by several factors (including environmental conditions). It is the responsibility of the driver to always check the area behind the vehicle before and while backing up.

Operation of the rear parking assist system

Operating condition

- This system will activate when the indicator on the rear parking assist OFF button is not illuminated. If you desire to deactivate the rear parking assist system, press the rear parking assist OFF button again. (The indicator on the button will illuminate.) To turn the system on, press the button again. (The indicator on the button will go off.)
- This system will activate when backing up with the ignition switch ON.

  If the vehicle is moving at a speed over 5 km/h (3 mph), the system may not be activated correctly.
- The sensing distance while the rear parking assist system is in operation is approximately 120 cm (47 in.).
- When more than two objects are sensed at the same time, the closest one will be recognized first.

Types of warning sound	Indicator*
When an object is 120 cm to 61 cm (47 in. to 24 in.) from the rear bumper: Buzzer beeps intermittently.	
When an object is 60 cm to 31 cm (23 in. to 12 in.) from the rear bumper: Buzzer beeps more frequently.	
When an object is within 30 cm (11 in.) of the rear bumper: Buzzer sounds continuously.	

* if equipped

✻ NOTICE

The indicator may differ from the illustration as objects or sensors status.
If the indicator blinks, we recommend that the system be checked by an authorized Kia dealer.

Non-operational conditions of rear parking assist system

The rear parking assist system may not operate properly when:

1. Moisture is frozen to the sensor. (It will operate normally when the moisture has been cleared.)
2. The sensor is covered with foreign matter, such as snow or water, or the sensor cover is blocked. (It will operate normally when the material is removed or the sensor is no longer blocked.)
3. Driving on uneven road surfaces (unpaved roads, gravel, bumps, gradient).
4. Objects generating excessive noise (vehicle horns, loud motorcycle engines, or truck air brakes) are within range of the sensor.
5. Heavy rain or water spray exists.
6. Wireless transmitters or mobile phones are within range of the sensor.
7. The sensor is covered with snow.
8. Trailer towing

The detecting range may decrease when:

1. The sensor is stained with foreign matter such as snow or water. (The sensing range will return to normal when removed.)
2. Outside air temperature is extremely hot or cold.

The following objects may not be recognized by the sensor:

1. Sharp or slim objects such as ropes, chains or small poles.
2. Objects which tend to absorb the sensor frequency such as clothes, spongy material or snow.
3. Undetectable objects smaller than 1 m (40 in.) in height and narrower than 14 cm (6 in.) in diameter.

Rear parking assist system precautions

- The rear parking assist system may not sound consistently depending on the speed and shapes of the objects detected.
- The rear parking assist system may malfunction if the vehicle bumper height or sensor installation has been modified or damaged. Any non-factory installed equipment or accessories may also interfere with the sensor performance.
- The sensor may not recognize objects less than 30 cm (12 in.) from the sensor, or it may sense an incorrect distance. Use caution.
- When the sensor is frozen or stained with snow, dirt, or water, the sensor may be inoperative until the stains are removed using a soft cloth.
- Do not push, scratch or strike the sensor. Sensor damage could occur.

✻ NOTICE

This system can only sense objects within the range and location of the sensors; It can not detect objects in other areas where sensors are not installed. Also, small or slim objects, such as poles or objects located between sensors may not be detected by the sensors.
Always visually check behind the vehicle when backing up.
Be sure to inform any drivers of the vehicle that may be unfamiliar with the system regarding the systems capabilities and limitations.

⚠ WARNING

Pay close attention when the vehicle is driven close to objects on the road, particularly pedestrians, and especially children. Be aware that some objects may not be detected by the sensors, due to the object's distance, size or material, all of which can limit the effectiveness of the sensor. Always perform a visual inspection to make sure the vehicle is clear of all obstructions before moving the vehicle in any direction.

Self-diagnosis

If you don't hear an audible warning sound or if the buzzer sounds intermittently when shifting the gear to the R (Reverse) position, this may indicate a malfunction in the rear parking assist system. If this occurs, we recommend that the system be checked by an authorized Kia dealer.

⚠ WARNING

Your new vehicle warranty does not cover any accidents or damage to the vehicle or injuries to its occupants due to a rear parking assist system malfunction. Always drive safely and cautiously.

PARKING ASSIST SYSTEM (IF EQUIPPED)

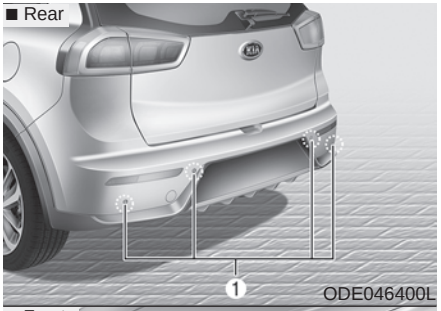

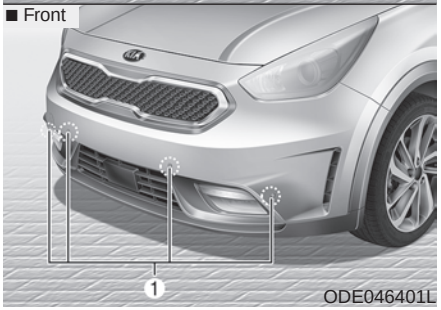

The parking assist system assists the driver during movement of the vehicle by chiming if any object is sensed within the distance of 100 cm (39 in.) in front and 120 cm (47 in.) behind the vehicle.

This system is a supplemental system and it is not intended to nor does it replace the need for extreme care and attention of the driver.

The sensing range and objects detectable by the sensors (①) are limited. Whenever moving pay as much attention to what is in front and behind of you as you would in a vehicle without a parking assist system.

⚠ WARNING

The parking assist system should only be considered as a supplementary function. The driver must check the front and rear view. The operational function of the parking assist system can be affected by many factors and conditions of the surroundings, so the responsibility rests always with the driver.

Operation of the parking assist system

Operating condition

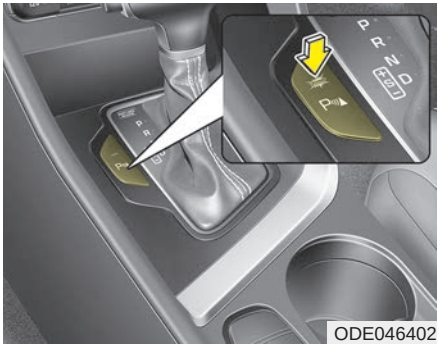

- This system activates when the parking assist system button is pressed with the ignition switch ON.
- The indicator of the parking assist system button turns on automatically and activates the parking assist system when you shift the gear to the R (Reverse) position.
- The sensing distance while backing up is approximately 120 cm (47 in.) when you are driving less than 10 km/h (6.2 mph).

- The sensing distance while moving forward is approximately 100 cm (39 in.) when you are driving less than 10 km/h (6.2 mph).
- When more than two objects are sensed at the same time, the closest one will be recognized first.
- The side sensors are activated when you shift the gear to the R (Reverse) position.
- If the vehicle speed is above 20km/h, the system automatically turns off. To activate again, push the button.

✻ NOTICE

It may not operate if it's distance from the object is already less than approximately 25 cm when the system is ON.

Type of warning indicator and sound

Distance from object		Warning indicator		Warning sound
		When driving forward	When driving rearward	
100cm~61cm	Front		-	Buzzer beeps intermittently
120cm~61cm	Rear	-		Buzzer beeps intermittently
60cm~31cm	Front			Buzzer beeps frequently
	Rear	-		Buzzer beeps frequently
30cm	Front			Buzzer sounds continuously
	Rear	-		Buzzer sounds continuously

✻ NOTICE

- **The actual warning sound and indicator may differ from the illustration according to objects or sensor status.**
- **Do not wash the vehicle's sensor with high pressure water.**

⚠ **CAUTION**

- ***This system can only sense objects within the range and location of the sensors;***

  It can not detect objects in other areas where sensors are not installed. Also, small or slim objects, such as poles or objects located between sensors may not be detected by the sensors.

  Always visually check behind the vehicle when backing up.
- ***Be sure to inform any drivers of the vehicle that may be unfamiliar with the system regarding the systems capabilities and limitations.***

Non-operational conditions of parking assist system

Parking assist system may not operate normally when:

1. Moisture is frozen to the sensor. (It will operate normally when moisture melts.)
2. Sensor is covered with foreign matter, such as snow or water, or the sensor cover is blocked. (It will operate normally when the material is removed or the sensor is no longer blocked.)
3. Sensor is stained with foreign matter such as snow or water. (Sensing range will return to normal when removed.)
4. The parking assist button is off.

There is a possibility of parking assist system malfunction when:

1. Driving on uneven road surfaces such as unpaved roads, gravel, bumps, or gradient.
2. Objects generating excessive noise such as vehicle horns, loud motorcycle engines, or truck air brakes can interfere with the sensor.
3. Heavy rain or water spray.
4. Wireless transmitters or mobile phones present near the sensor.
5. Sensor is covered with snow.

Detecting range may decrease when:

1. Outside air temperature is extremely hot or cold.
2. Undetectable objects smaller than 1 m and narrower than 14 cm in diameter.

The following objects may not be recognized by the sensor:

1. Sharp or slim objects such as ropes, chains or small poles.
2. Objects, which tend to absorb sensor frequency such as clothes, spongy material or snow.

✻ NOTICE

1. The warning may not sound sequentially depending on the speed and shapes of the objects detected.
2. The parking assist system may malfunction if the vehicle bumper height or sensor installation has been modified. Any non-factory installed equipment or accessories may also interfere with the sensor performance.
3. Sensor may not recognize objects less than 30 cm from the sensor, or it may sense an incorrect distance. Use with caution.
4. When the sensor is frozen or stained with snow or water, the sensor may be inoperative until the stains are removed using a soft cloth.
5. Do not push, scratch or strike the sensor with any hard objects that could damage the surface of the sensor. Sensor damage could occur.

✻ NOTICE

This system can only sense objects within the range and location of the sensors, it can not detect objects in other areas where sensors are not installed. Also, small or slim objects, or objects located between sensors may not be detected.
Always visually check in front and behind the vehicle when driving.
Be sure to inform any drivers in the vehicle that may be unfamiliar with the system regarding the systems capabilities and limitations.

⚠ WARNING

Pay close attention when the vehicle is driven close to objects on the road, particularly pedestrians, and especially children. Be aware that some objects may not be detected by the sensors, due to the objects distance, size or material, all of which can limit the effectiveness of the sensor. Always perform a visual inspection to make sure the vehicle is clear of all obstructions before moving the vehicle in any direction.

Self-diagnosis

When you shift the gear to the R (Reverse) position and if one or more of the below occurs you may have a malfunction in the rear parking assist system.

- You don't hear an audible warning sound or if the buzzer sounds intermittently.
- (blinks) is displayed. (if equipped)

If this occurs, we recommend that the system be checked by an authorized Kia dealer.

⚠ WARNING

Your new vehicle warranty does not cover any accidents or damage to the vehicle or injuries to its occupants related to a parking assist system. Always drive safely and cautiously.

REARVIEW CAMERA (IF EQUIPPED)

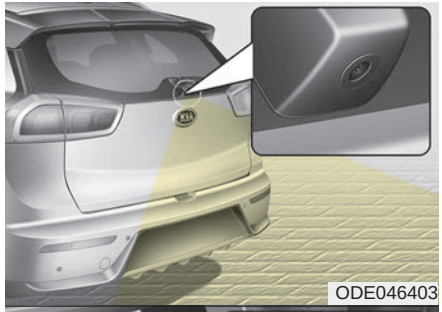

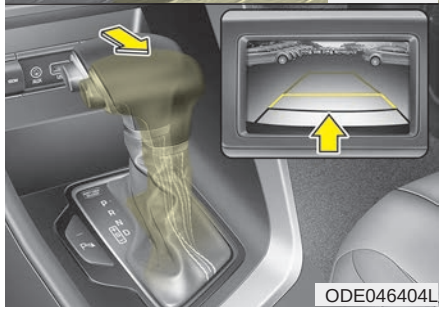

The rearview camera will activate when the back-up light is ON with the ignition switch ON and the shift lever in the R (Reverse) position.

This system is a supplemental system that shows behind the vehicle through the rearview display mirror while backing-up.

⚠ WARNING

- **This system is a supplementary function only. It is the responsibility of the driver to always check the inside/outside rearview mirror and the area behind the vehicle before and while backing up because there is a dead zone that can't be seen by the camera.**
- **Always keep the camera lens clean. If lens is covered with foreign matter, the camera may not operate normally.**

❈ If your vehicle is equipped with AVN(Audio, Video and Navigation) system, rearview display will show behind the vehicle through the AVN monitor while backing-up. Refer to a separately supplied manual for detailed information.

LIGHTING

Battery saver function

- The purpose of this feature is to prevent the battery from being discharged. The system automatically turns off the parking lights when the driver removes the ignition key and opens the driver-side door.
- With this feature, the parking lights will turn off automatically if the driver parks on the side of the road at night.

  If necessary, to keep the lights on when the ignition key is removed, perform the following:

  1) Open the driver-side door.
  2) Turn the parking lights OFF and ON again using the light switch on the steering column.

⚠ CAUTION

If the driver gets out of the vehicle through other doors (except driver's door), the battery saver function does not operate. Therefore, It causes the battery to be discharged. In this case, make sure to turn off the lamp before getting out of the vehicle.

Headlight escort function (if equipped)

If you turn the ignition switch to the ACC or OFF position with the headlights ON, the headlights remain on for about 5 minutes. However, if the driver's door is opened and closed, the headlights are turned off after 15 seconds.

The headlights can be turned off by pressing the lock button on the transmitter (or smart key) twice or turning the light switch to the OFF position.

Daytime running light (if equipped)

The Daytime Running Lights (DRL) can make it easier for others to see the front of your vehicle during the day. DRL can be helpful in many different driving conditions, and it is especially helpful after dawn and before sunset.

The DRL system will turn the dedicated lamp OFF when:

1. The headlight or fog lamp switch is ON.
2. The engine is OFF.

❋ Traffic Change (For Europe)

The low beam light distribution is asymmetric. If you go abroad to a country with opposite traffic direction, this asymmetric part will dazzle oncoming car driver. To prevent dazzle, ECE regulation demand several technical solutions (ex. automatic change system, adhesive sheet, down aiming). This headlamps are designed not to dazzle opposite drivers. So, you need not change your headlamps in a country with opposite traffic direction.

Lighting control

OUM044053L

The light switch has a Headlight and a Parking light position.

To operate the lights, turn the knob at the end of the control lever to one of the following positions:

(1) OFF position

(2) Auto light position

(3) Parking light position

(4) Headlight position

Parking light position ( )

OUM044054L

When the light switch is in the parking light position (3rd position), the tail, license and instrument panel lights will turn ON.

Headlight position ( )

OUM044217L

When the light switch is in the headlight position (4th position), the head, tail, license and instrument panel lights will turn ON.

✻ NOTICE

The ignition switch must be in the ON position to turn on the headlights.

Auto light (if equipped)

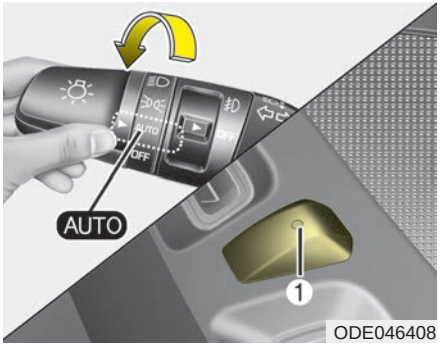

ODE046408

When the light switch is in the AUTO light position, the taillights and headlights will be turned ON or OFF automatically depending on the amount of light outside the vehicle.

⚠ CAUTION

- ***Never place anything over the sensor (1) located on the instrument panel. This will ensure better auto-light system control.***
- ***Don't clean the sensor using a window cleaner. The cleaner may leave a light film which could interfere with sensor operation.***
- ***If your vehicle has window tint or other types of metallic coating on the front windshield, the Auto light system may not work properly.***

High beam operation

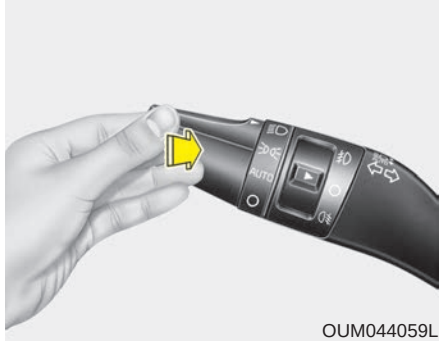

OUM044059L

To turn on the high beam headlamp, push the lever away from you. The lever will return to its original position.

The high beam indicator will light when the headlight high beams are switched on.

To turn off the high beam headlamp, pull the lever to you when the high beam is on. The lever will return to its original position.

To prevent the battery from being discharged, do not leave the lights on for a prolonged time while the engine is not running.

⚠ WARNING

Do not use high beam when there are other vehicles. Using high beam could obstruct the other driver's vision.

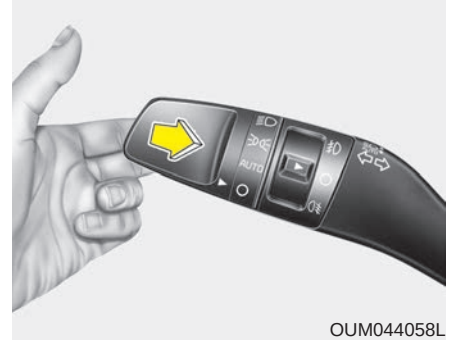

OUM044058L

To flash the headlights, pull the lever towards you. It will return to the normal (low beam) position when released. The headlight switch does not need to be on to use this flashing feature.

Turn signals and lane change signals

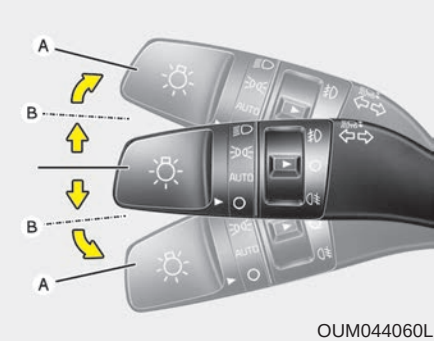

OUM044060L

The ignition switch must be on for the turn signals to function. To turn on the turn signals, move the lever up or down (A). The green arrow indicators on the instrument panel indicate which turn signal is operating.

They will self-cancel after a turn is completed. If the indicator continues to flash after a turn, manually return the lever to the OFF position.

To signal a lane change, move the turn signal lever slightly and hold it in position (B). The lever will return to the OFF position when released.

If an indicator stays on and does not flash or if it flashes abnormally, one of the turn signal bulbs may be burned out and will require replacement.

One-touch lane change function (if equipped)

To activate an one-touch lane change function, move the turn signal lever slightly for less than 0.7 second and then release it. The lane change signals will blink 3 times.

✻ NOTICE

If an indicator flash is abnormally quick or slow, a bulb may be burned out or have a poor electrical connection in the circuit.

Front fog light (if equipped)

OUM044061L

Fog lights are used to provide improved visibility when visibility is poor due to fog, rain or snow, etc. The fog lights will turn on when the fog light switch (1) is turned on after the parklight is turned on.

To turn off the fog lights, turn the fog light switch (1) to the OFF position.

⚠ CAUTION

When in operation, the fog lights consume large amounts of vehicle electrical power. Only use the fog lights when visibility is poor.

Rear fog light (if equipped)

OUM044329L

To turn the rear fog lights on, turn the headlight switch to the headlight on position and turn the rear fog light switch (1) to the on position.

The rear fog lights turn on when the rear fog light switch is turned on after the front fog light switch is turned on and the headlight switch is in the parklight position.

To turn the rear fog lights off, turn the rear fog light switch to the on position again or turn the headlight switch off.

✻ NOTICE

To turn on the rear fog light switch, the ignition switch must be in the ON position.

Headlight leveling device (if equipped)

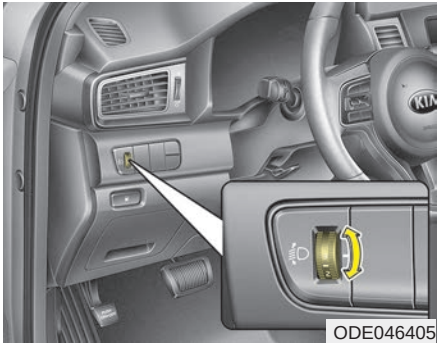

To adjust the headlight beam level according to the number of passengers and loading weight in the luggage area, turn the beam leveling switch.

The higher the number of the switch position, the lower the headlight beam level. Always keep the headlight beam at the proper leveling position, or headlights may dazzle other road users.

Listed below are the examples of proper switch settings. For loading conditions other than those listed below, adjust the switch position so that the beam level may be the nearest as the condition obtained according to the list.

Loading condition	Switch position
Driver only	0
Driver + Front passenger	0
Driver + Full passengers	1
Full passengers (including driver) + Maximum permissible loading	2
Driver + Maximum permissible loading	3

WIPERS AND WASHERS

Windshield wiper/washer

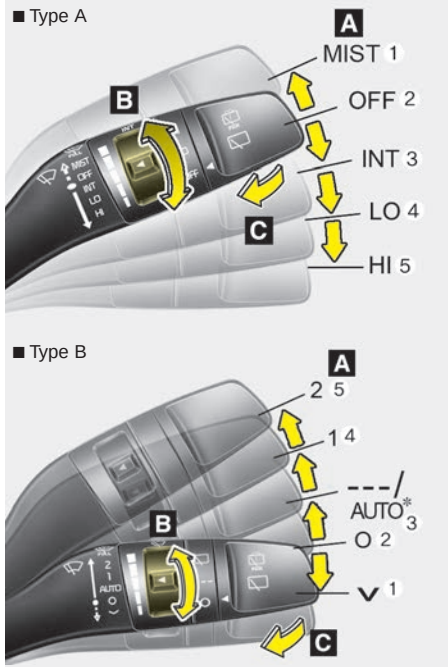

Rear window wiper/washer

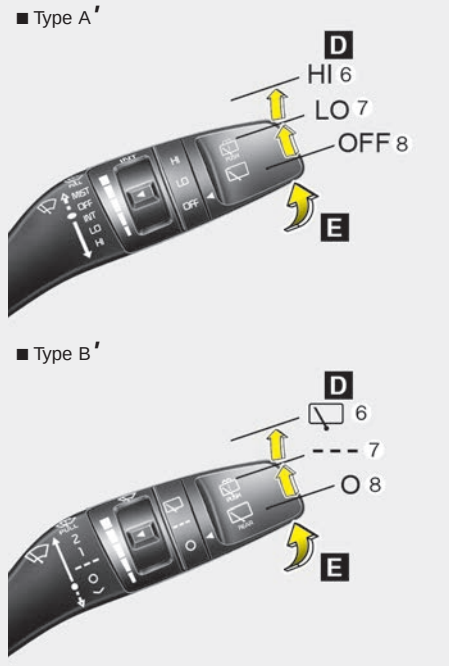

OQL046407/OQLE046407/OQL046464/OQL046464L

A : Wiper speed control (front)
(1) MIST/ ∨ – Single wipe
(2) OFF / O – Off
(3) INT / --- – Intermittent wipe
AUTO* – Auto control wipe
(4) LO / 1 – Low wiper speed
(5) HI / 2 – High wiper speed

B : Intermittent control wipe time adjustment

C : Wash with brief wipes (front)*

D : Rear wiper/washer control*
(6) HI / – Continuous wipe
(7) LO / --- – Intermittent wipe*
(8) OFF / O – Off

E : Wash with brief wipes (rear)*

* if equipped

Windshield wipers

Operates as follows when the ignition switch is turned ON.

(1) MIST/∨ : For a single wiping cycle, move the lever to this (MIST/∨) position and release it. The wipers will operate continuously if the lever is held in this position.

(2) OFF / O : Wiper is not in operation

(3) INT / --- : Wiper operates intermittently at the same wiping intervals. Use this mode in light rain or mist. To vary the speed setting, turn the speed control knob.

(4) LO / 1 : Normal wiper speed

(5) HI / 2 : Fast wiper speed

✻ NOTICE

If there is heavy accumulation of snow or ice on the windshield, defrost the windshield for about 10 minutes, or until the snow and/or ice is removed before using the windshield wipers to ensure proper operation. If you do not remove the snow and/or ice before using the wiper and washer, it may damage the Wiper and washer system.

Auto control (if equipped)

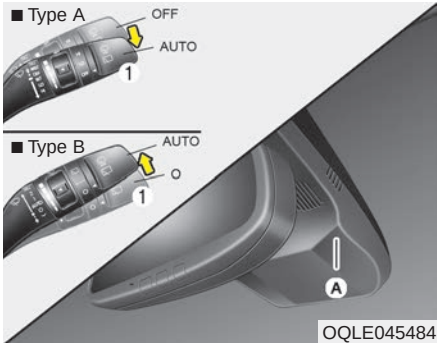

OQLE045484

The rain sensor (A) located on the upper end of the windshield glass senses the amount of rainfall and controls the wiping cycle for the proper interval. The more it rains, the faster the wiper operates. When the rain stops, the wiper stops.

To vary the speed setting, turn the speed control knob (1).

If the wiper switch is set in AUTO mode when the ignition switch is ON, the wiper will operate once to perform a self-check of the system. Set the wiper to OFF (O) position when the wiper is not in use.

⚠ CAUTION

When the ignition switch is ON and the windshield wiper switch is placed in the AUTO mode, use caution in the following situations to avoid any injury to the hands or other parts of the body:

- ***Do not touch the upper end of the windshield glass facing the rain sensor.***
- ***Do not wipe the upper end of the windshield glass with a damp or wet cloth.***
- ***Do not put pressure on the windshield glass.***

⚠ CAUTION

- ***When washing the vehicle, set the wiper switch in the OFF (O) position to stop the auto wiper operation.***

  The wiper may operate and be damaged if the switch is set in the AUTO mode while washing the vehicle.
- ***Do not remove the sensor cover located on the upper end of the passenger side windshield glass. Damage to system parts could occur and may not be covered by your vehicle warranty.***
- ***When starting the vehicle in winter, set the wiper switch in the OFF (O) position. Otherwise, wipers may operate and ice may damage the windshield wiper blades. Always remove all snow and ice and defrost the windshield properly prior to operating the windshield wipers.***

(Continued)

(Continued)

- ***When tinting the windshield, be careful of any fluid getting into the sensor located in the top center of the front windshield. It may damage the related parts.***

Windshield washers

■ Type A

OQL045409

■ Type B

OQLE045409

In the OFF (O) position, pull the lever gently toward you to spray washer fluid on the windshield and to run the wipers 1-3 cycles.

Use this function when the windshield is dirty.

The spray and wiper operation will continue until you release the lever.

If the washer does not work, check the washer fluid level. If the fluid level is not sufficient, you will need to add appropriate non-abrasive windshield washer fluid to the washer reservoir.

The reservoir filler neck is located in the front of the engine compartment on the passenger side.

⚠ CAUTION

To prevent possible damage to the washer pump, do not operate the washer when the fluid reservoir is empty.

⚠ WARNING

Do not use the washer in freezing temperatures without first warming the windshield with the defrosters; the washer solution could freeze on the windshield and obscure your vision.

⚠ CAUTION

- ***To prevent possible damage to the wipers or windshield, do not operate the wipers when the windshield is dry.***
- ***To prevent damage to the wiper blades, do not use gasoline, kerosene, paint thinner, or other solvents on or near them.***
- ***To prevent damage to the wiper arms and other components, do not attempt to move the wipers manually.***
- ***To prevent possible damage to the wipers and washer system, use anti-freezing washer fluids in the winter season or cold weather.***

Headlight washer (if equipped)

If your vehicle is equipped with the headlight washer it will operate at the same time when you operate the windshield washer. However, if this function is operated once, the headlight washer will not operate within 15 minutes. It will operate when the headlight is ON and the ignition switch or engine start/stop button is in the ON position.

The washer fluid will be sprayed on to the headlights.

✻ NOTICE

- **Check the headlight washers periodically to confirm that the washer fluid is being sprayed properly onto the headlight lenses.**
- **The headlight washer can be operated 15 minutes after being operated last time.**

Rear window wiper and washer switch

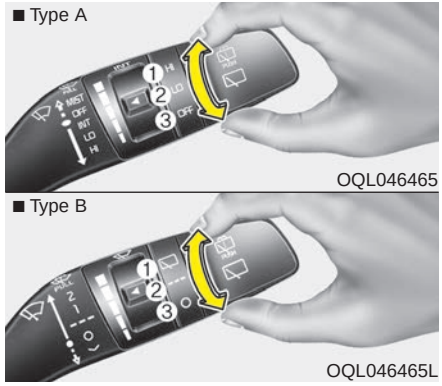

The rear window wiper and washer switch is located at the end of the wiper and washer switch lever. Turn the switch to the desired position to operate the rear wiper and washer.

(1) HI / - Normal wiper operation

(2) LO / --- - Intermittent wiper operation (if equipped)

(3) OFF / O - Wiper is not in operation

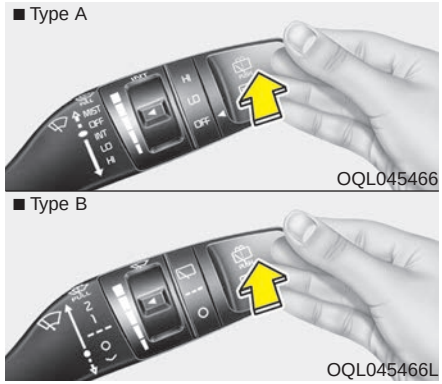

Push the lever away from you to spray rear washer fluid and to run the rear wipers 1~3 cycles. The spray and wiper operation will continue until you release the lever.

INTERIOR LIGHT

⚠ CAUTION

Do not use the interior lights for extended periods when the engine is not running.

It may cause battery discharge.

⚠ WARNING

Do not use the interior lights when driving in the dark. Accidents could happen because the view may be obscured by interior lights.

Automatic turn off function (if equipped)

The interior lights automatically turn off approximately 20 minutes after the ignition switch is turned off.

If your vehicle is equipped with the theft alarm system, the interior lights automatically turns off approximately 3 seconds after the system is armed stage.

Map lamp

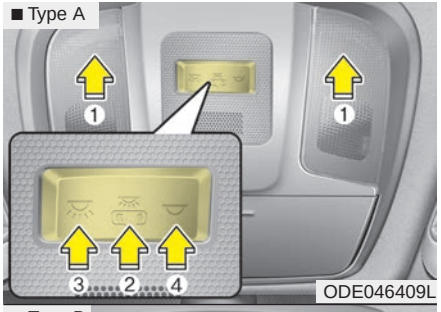

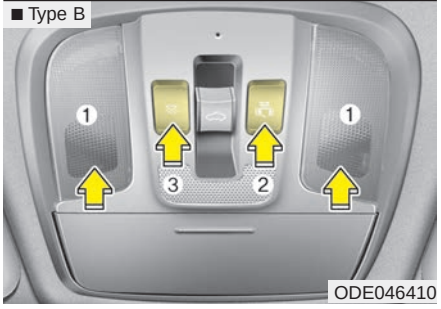

- (2) :
- The map lamp and room lamp comes on when a door is opened. The lamps go out after approximately 30 seconds.
- The map lamp and room lamp comes on for approximately 30 seconds when doors are unlocked with a transmitter or smart key as long as the doors are not opened.
- The map lamp and room lamp will stay on for approximately 20 minutes if a door is opened with the ignition switch in the ACC or LOCK/OFF position.
- The map lamp and room lamp will stay on continuously if the door is opened with the ignition switch in the ON position.
- The map lamp and room lamp will go out immediately if the ignition switch is changed to the ON position or all doors are locked.
- To turn off the DOOR mode, press the DOOR button (2) once again (not pressed).

✻ NOTICE

The DOOR mode and ROOM mode can not be selected at a time.

Front Room Lamp:

• Type A

(3): Press this switch to turn the front and rear room lamps on.

(4): Press this switch to turn the front and rear room lamps off.

• Type B

(3): Press this switch to turn the front and rear room lamps on and off.

Room lamp

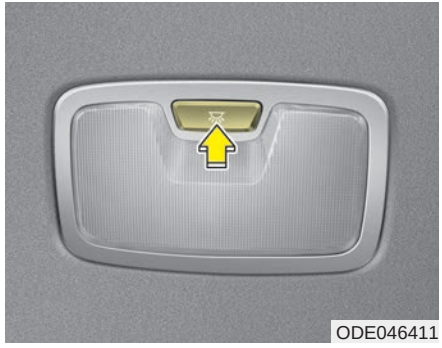
ODE046411

• : The light stays on at all times.

Tailgate room lamp

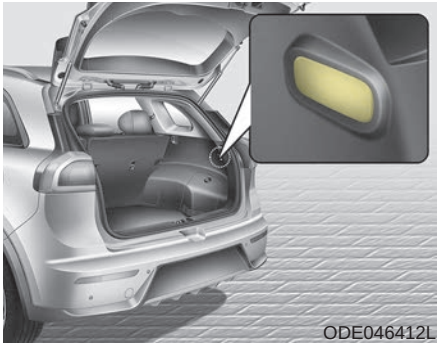

The tailgate room lamp comes on when the tailgate is opened.

✻ NOTICE

The tailgate lamp comes on as long as the tailgate lid is open. To prevent unnecessary charging system drain, close the tailgate lid securely after using the tailgate.

Vanity mirror lamp (if equipped)

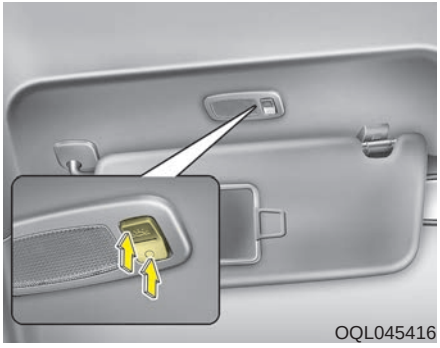

Push the switch to turn the light on or off.

- : The lamp will turn on if this button is pressed.
- ○ : The lamp will turn off if this button is pressed.

⚠ CAUTION - Vanity mirror lamp

Always have the switch in the off position when the vanity mirror lamp is not in use. If the sunvisor is closed without the lamp off, it may discharge the battery or damage the sunvisor.

WELCOME SYSTEM (IF EQUIPPED)

Welcome light (if equipped)

ODE046413

When all the doors (and tailgate) are locked and closed, the door handle lamp will come on for about 15 seconds if any of the below is performed.

- With the smart key system
  - When the vehicle is approached with the smart key in possession.

Escort welcome (if equipped)

When the headlight (light switch in the headlight or AUTO position) is on and all doors (and tailgate) are locked and closed, the position light and headlight will come on for 15 seconds if any of the below is performed.

- Without smart key system
  - When the door unlock button is pressed on the transmitter.
- With the smart key system
  - When the door unlock button is pressed on the smart key.

At this time, if you press the door lock or unlock button, the position light and headlight will turn off immediately.

Interior light

When the interior light switch is in the DOOR position and all doors (and tailgate) are locked and closed, the room lamp will come on for 30 seconds if any of the below is performed.

- Without smart key system
  - When the door unlock button is pressed on the transmitter.
- With the smart key system
  - When the door unlock button is pressed on the smart key.
  - When the button of the outside door handle is pressed.

At this time, if you press the door lock or unlock button, the room lamp will turn off immediately.

DEFROSTER

⚠ CAUTION

To prevent damage to the conductors bonded to the inside surface of the rear window, never use sharp instruments or window cleaners containing abrasives to clean the window.

✻ NOTICE

If you want to defrost and defog the front windshield, refer to "Windshield defrosting and defogging" in this section.

Rear window defroster

ODE046301

The defroster heats the window to remove frost, fog and thin ice from the rear window, while the engine is running.

To activate the rear window defroster, press the rear window defroster button located in the center facia switch panel. The indicator on the rear window defroster button illuminates when the defroster is ON.

If there is heavy accumulation of snow on the rear window, brush it off before operating the rear defroster.

The rear window defroster automatically turns off after approximately 20 minutes or when the ignition switch is turned off. To turn off the defroster, press the rear window defroster button again.

Outside rearview mirror defroster (if equipped)

If your vehicle is equipped with the outside rearview mirror defrosters, they will operate at the same time you turn on the rear window defroster.

CLIMATE CONTROL SYSTEM

System operation

Ventilation

1. Set the mode to the position.
2. Set the air intake control to the outside (fresh) air position.
3. Set the temperature control to the desired position.
4. Set the fan speed control to the desired speed.

Heating

1. Set the mode to the position.
2. Set the air intake control to the outside (fresh) air position.
3. Set the temperature control to the desired position.
4. Set the fan speed control to the desired speed.
5. If dehumidified heating is desired, turn the air conditioning system (if equipped) on.

Operation Tips

- To keep dust or unpleasant fumes from entering the vehicle through the ventilation system, temporarily set the air intake control to the recirculated air position. Be sure to return the control to the fresh air position when the irritation has passed to keep fresh air in the vehicle. This will help keep the driver alert and comfortable.
- Air for the heating/cooling system is drawn in through the grilles just ahead of the windshield. Care should be taken that these are not blocked by leaves, snow, ice or other obstructions.
- To prevent interior fog on the windshield, set the air intake control to the fresh air position and fan speed to the desired position, turn on the air conditioning system, and adjust the temperature control to desired temperature.
- If the windshield fogs up, set the mode to the position.

⚠ CAUTION

Operating the blower when the ignition switch is in the ON position could cause the battery to discharge. Operate the blower when the engine is running.

Air conditioning

Kia air conditioning systems are filled with R-134a or R-1234yf refrigerant.

1. Start the engine. Push the air conditioning button.
2. Set the mode to the position.
3. Set the air intake control to the outside air or recirculated air position.
4. Adjust the fan speed control and temperature control to maintain maximum comfort.

Your vehicle is filled with R-134a or R-1234yf according to the regulation in your country at the time of production. You can find out which air conditioning refrigerant is applied to your vehicle on the label located inside of the hood. Refer to chapter 9 for the location of the air conditioning refrigerant label.

⚠ CAUTION

- ***The refrigerant system should only be serviced by trained and certified technicians to insure proper and safe operation.***
- ***The refrigerant system should be serviced in a well-ventilated place.***
- ***The air conditioning evaporator (cooling coil) shall never be repaired or replaced with one removed from a used or salvaged vehicle and new replacement MAC evaporators shall be certified (and labeled) as meeting SAE Standard J2842.***

✻ NOTICE

- **When using the air conditioning system, monitor the temperature gauge closely while driving up hills or in heavy traffic when outside temperatures are high. Air conditioning system operation may cause engine overheating. Continue to use the blower fan but turn the air conditioning system off if the temperature gauge indicates engine overheating.**
- **When opening the windows in humid weather air conditioning may create water droplets inside the vehicle. Since excessive water droplets may cause damage to electrical equipment, air conditioning should only be used with the windows closed.**

Air conditioning system operation tips

- If the vehicle has been parked in direct sunlight during hot weather, open the windows for a short time to let the hot air inside the vehicle escape.
- Use air conditioning to reduce humidity and moisture inside the vehicle on rainy or humid days.
- During air conditioning system operation, you may occasionally notice a slight change in engine speed as the air conditioning compressor cycles. This is a normal system operation characteristic.
- Use the air conditioning system every month only for a few minutes to ensure maximum system performance.
- When using the air conditioning system, you may notice clear water dripping (or even puddling) on the ground under the passenger side of the vehicle. This is a normal system operation characteristic.
- Operating the air conditioning system in the recirculated air position provides maximum cooling, however, continual operation in this mode may cause the air inside the vehicle to become stale.
- During cooling operation, you may occasionally notice a misty air flow because of rapid cooling and humid air intake. This is a normal system operation characteristic.

Climate control air filter

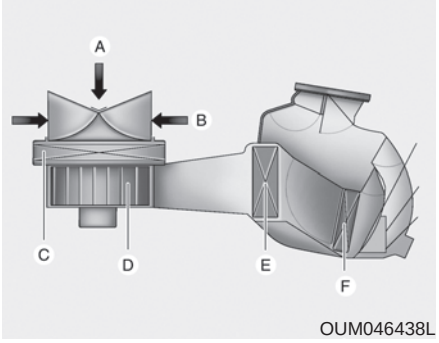

A : Outside air
B : Recirculated air
C : Climate control air filter
D : Blower
E : Evaporator core
F : Heater core

The climate control air filter installed behind the glove box filters the dust or other pollutants that come into the vehicle from the outside through the heating and air conditioning system.

If dust or other pollutants accumulate in the filter over a period of time, the air flow from the air vents may decrease, resulting in moisture accumulation on the inside of the windshield even when the outside (fresh) air position is selected. If this happens, we recommend that the climate control air filter be replaced by an authorized Kia dealer.

✻ NOTICE

- **Replace the filter according to the Maintenance Schedule.**
  If the car is being driven in severe conditions such as dusty, rough roads, more frequent climate control air filter inspections and changes are required.
- **When the air flow rate suddenly decreases, we recommend that the system be checked by an authorized Kia dealer.**

Air Conditioning refrigerant label

■ Example

Type A

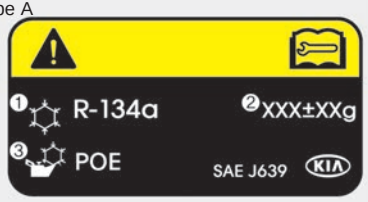

ODE066031L

Type B

ODE066032L

❊ The actual Air Conditioning refrigerant label in the vehicle may differ from the illustration.

Each symbols and specification on air conditioning refrigerant label means as below ;

1. Classification of refrigerant
2. Amount of refrigerant
3. Classification of Compressor lubricant

You can find out which air conditioning refrigerant is applied your vehicle at the label inside of the engine room.

Refer to chapter 9 for more detail location of air conditioning refrigerant label.

Checking the amount of air conditioner refrigerant and compressor lubricant

When the amount of refrigerant is low, the performance of the air conditioning is reduced. Overfilling also has a bad influence on the air conditioning system.

Therefore, if abnormal operation is found, we recommend that the system be inspected by an authorized Kia dealer.

⚠ WARNING - Vehicles equipped with R-134a

Because the refrigerant is at very high pressure, the air conditioning system should only be serviced by trained and certified technicians. It is important that the correct type and amount of oil and refrigerant is used.

Otherwise, it may cause damage to the vehicle and personal injury.

⚠ WARNING - Vehicles equipped with R-1234yf

Because the refrigerant is mildly inflammable and at very high pressure, the air conditioning system should only be serviced by trained and certified technicians. It is important that the correct type and amount of oil and refrigerant is used.

Otherwise, it may cause damage to the vehicle and personal injury.

Automatic climate control system

■ **Type A**

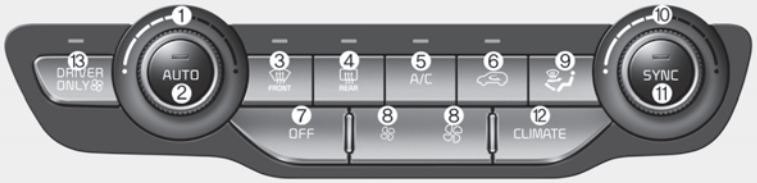

■ **Type B**

System Overview

1. Driver's temperature control knob
2. AUTO (automatic control) button
3. Front windshield defroster button
4. Rear window defroster button
5. Air conditioning button
6. Air intake control button
7. OFF button
8. Fan speed control button
9. Mode selection button
10. Passenger's temperature control knob
11. SYNC temperature control selection button
12. Climate button
13. Driver only select button

ODE046300L/ODE046320L

Automatic heating and air conditioning

ODE046302

1. Press the AUTO button. The modes, fan speeds, air intake and air-conditioning will be controlled automatically according to the temperature setting.

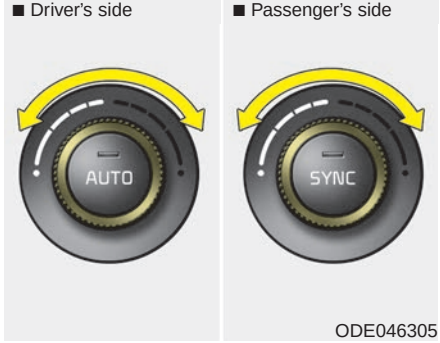

ODE046305

2. Turn the temperature control knob to the desired temperature.

✻ NOTICE

- **To turn the automatic operation off, select any button or switch of the following:**
  - **Mode selection button**
  - **Air conditioning button**
  - **Front windshield defroster button (Press the button one more time to deselect the front windshield defroster function. The 'AUTO' sign will illuminate on the information display once again.)**
  - **Fan speed control button**

  The selected function will be controlled manually while other functions operate automatically.
- **For your convenience and to improve the effectiveness of the climate control, use the AUTO button and set the temperature to 22°C/71°F (23°C/73°F- Except Europe).**

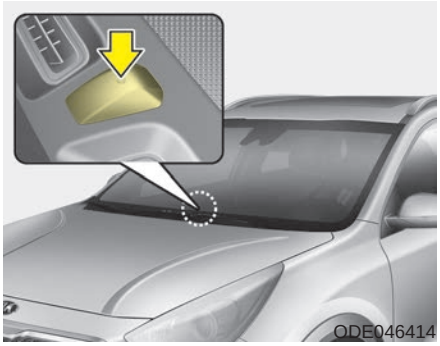

✻ NOTICE

Never place anything over the sensor located on the instrument panel to ensure better control of the heating and cooling system.

Mode selection

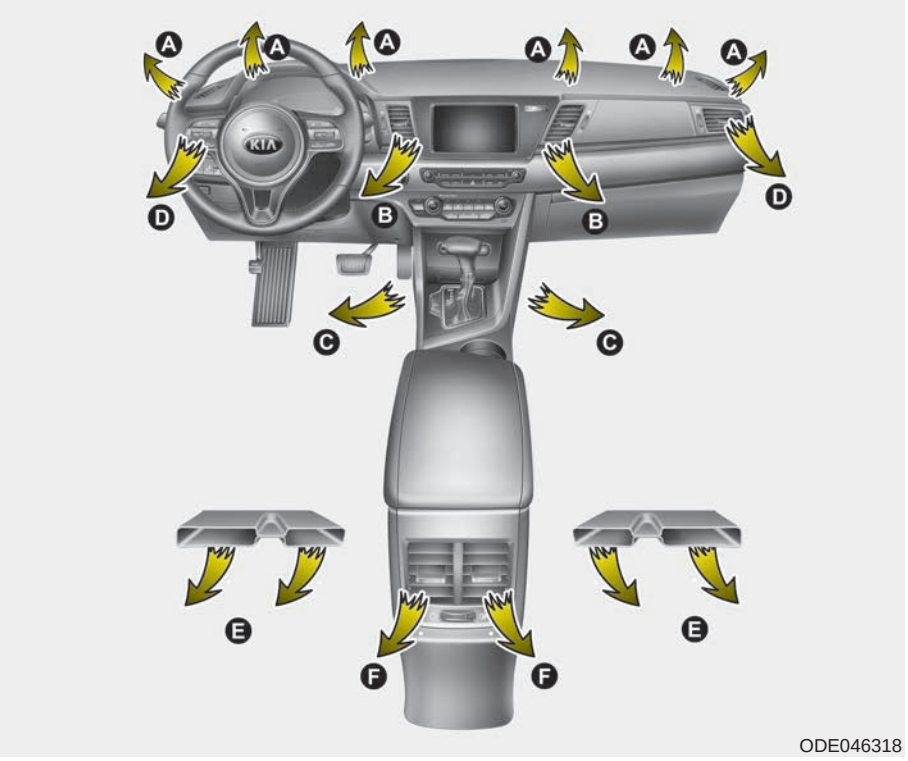

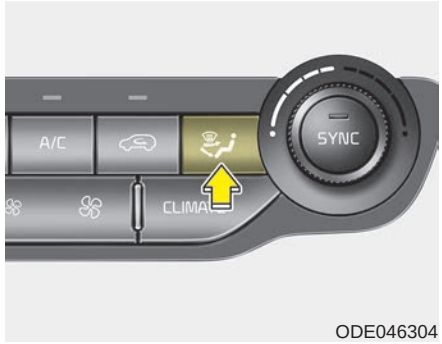

ODE046304

The mode selection button controls the direction of the air flow through the ventilation system.

The air flow outlet port is converted as follows:

Face-Level (B, D, F)

Air flow is directed toward the upper body and face. Additionally, each outlet can be controlled to direct the air discharged from the outlet.

Bi-Level (B, C, D, E, F)

Air flow is directed towards the face and the floor.

Floor-Level (A, C, D, E, F)

Most of the air flow is directed to the floor, with a small amount of the air being directed to the windshield and side window defrosters.

Floor/Defrost-Level (A, C, D, E, F)

Most of the air flow is directed to the floor and the windshield with a small amount directed to the side window defrosters.

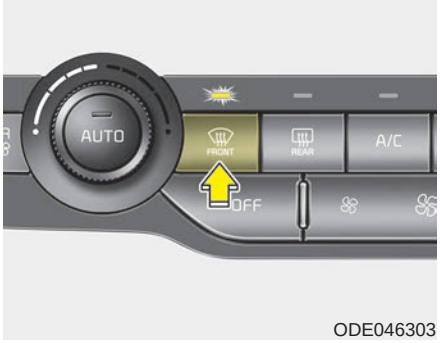

ODE046303

Defrost-Level

Most of the air flow is directed to the windshield with a small amount of air directed to the side window defrosters.

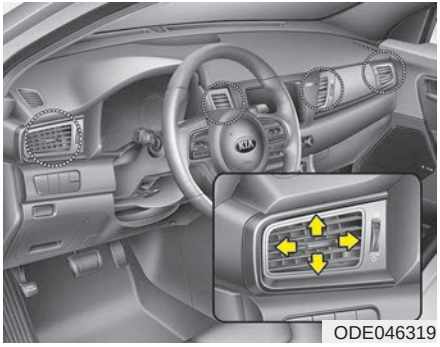
ODE046319

Instrument panel vents

The outlet vents can be opened or closed separately using the thumb-wheel.

Also, you can adjust the direction of air delivery from these vents using the vent control lever as shown.

✻ NOTICE - 2nd row outlet vents (E,F)

- **The air flow of the 2nd row outlet vents is controlled by the front climate control system and delivered through the inside air duct of the floor (E, F).**
- **The air flow of the 2nd row outlet vents (E, F) may be weaker than the instrument panel vents for the long air duct.**

Temperature control

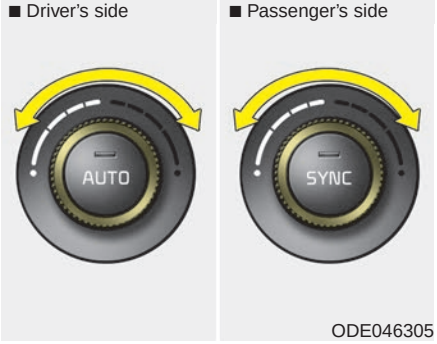

The temperature will increase to the maximum by turning the knob to the extreme right.

The temperature will decrease to the minimum by turning the knob to the extreme left.

When turning the knob, the temperature will increase or decrease by 0.5°C/1°F. When set to the lowest temperature setting, the air conditioning will operate continuously.

Adjusting the driver and passenger side temperature equally

- Press the "SYNC" button to adjust the driver and passenger side temperature equally.

  The passenger side temperature will be set to the same temperature as the driver side temperature.
- Turn the driver side temperature control knob. The driver and passenger side temperature will be adjusted equally.

Adjusting the driver and passenger side temperature individually

- Press the "SYNC" button again to adjust the driver and passenger side temperature individually. The illumination of button turns off.
- Operate the driver side temperature control knob to adjust the driver side temperature.
- Operate the passenger side temperature control knob to adjust the passenger side temperature.

Temperature conversion (°C ↔ °F) (if equipped)

You can switch the temperature mode between Centigrade to Fahrenheit as follows;

While pressing the OFF button, depress the AUTO button for 3 seconds or more. The display will change from Centigrade to Fahrenheit, or from Fahrenheit to Centigrade.

Air intake control

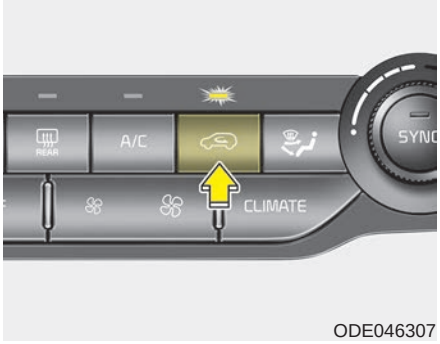

ODE046307

This is used to select the outside (fresh) air position or recirculated air position.

To change the air intake control position, push the control button.

Recirculated air position

With the recirculated air position selected, air from the passenger compartment will be drawn through the heating system and heated or cooled according to the function selected.

Outside (fresh) air position

With the outside (fresh) air position selected, air enters the vehicle from outside and is heated or cooled according to the function selected.

✻ NOTICE

Prolonged operation of the heater in the recirculated air position (without air conditioning selected) may cause fogging of the windshield and side windows and the air within the passenger compartment may become stale.
In addition, prolonged use of the air conditioning with the recirculated air position selected will result in excessively dry air in the passenger compartment.

⚠ WARNING

- **Continue using the climate control system in the recirculated air position may allow humidity to increase inside the vehicle which may fog the glass and obscure visibility.**
- **Do not sleep in a vehicle with the air conditioning or heating system on. It may cause serious harm or death due to a drop in the oxygen level and/or body temperature.**
- **Continue using the climate control system in the recirculated air position can cause drowsiness or sleepiness, and loss of vehicle control. Set the air intake control to the outside (fresh) air position as much as possible while driving.**

Fan speed control

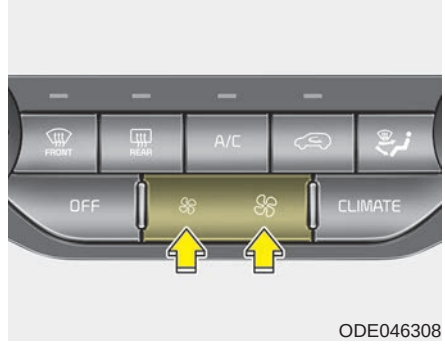

ODE046308

The fan speed can be set to the desired speed by pushing the fan speed control button.

The higher the fan speed is, the more air is delivered.

Pressing the OFF button turns off the fan.

Air conditioning

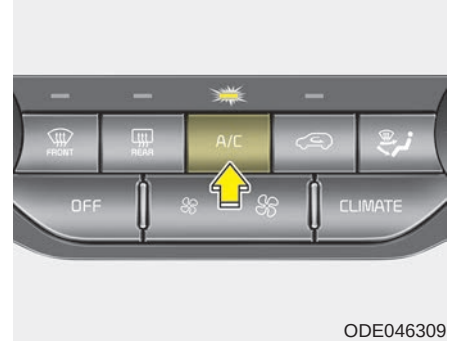

ODE046309

Press the A/C button to turn the air conditioning system on (indicator light will illuminate).

Press the button again to turn the air conditioning system off.

OFF mode

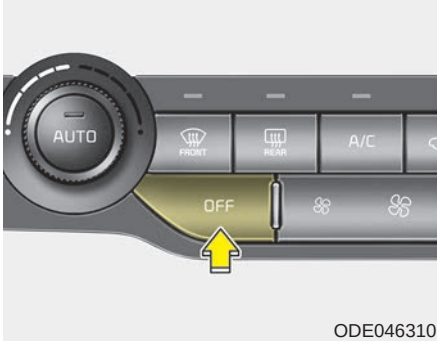

ODE046310

Press the front blower OFF button to turn off the front air climate control system. However, you can still operate the mode and air intake buttons as long as the ignition switch is in the ON position.

Climate information screen selection (if equipped)

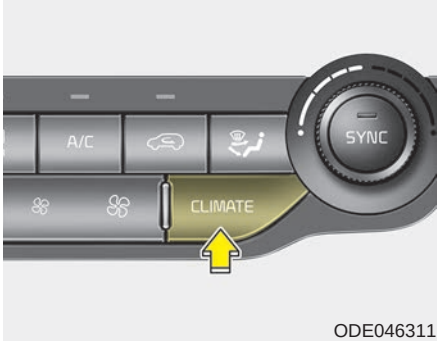

ODE046311

Press the climate information screen selection button to display climate information on the screen.

Driver Only

ODE046312

If you press the DRIVER ONLY button and the indicator light illuminates, cold air mostly blows in the direction of the driver's seat. However, some of the cold air may come out of other seats' ducts to keep indoor air pleasant.

If you use the button with no passenger in the front passenger seat, energy consumption will be reduced.

Automatic ventilation

The system automatically selects the outside (fresh) air position when the climate control system operates over a certain period of time (approximately 30 minutes) in low temperature with the recirculated air position selected.

To cancel or reset the Automatic Ventilation

When the air conditioning system is on, select Face Level mode and while pressing the A/C button, press the recirculated air position button five times within three seconds.

When the automatic ventilation is canceled, the indicator blinks 3 times. When the automatic ventilation is activated, the indicator blinks 6 times.

Sunroof inside air recirculation

The outside (fresh) air position is automatically selected, when the sunroof is opened while operating the heating/air conditioning system.

When you select the recirculated air position, the system maintains the recirculated air position for 3 minutes and then automatically converts to the outside (fresh) air position.

When the sunroof is closed, the air intake position will return to the original position that was selected.

WINDSHIELD DEFROSTING AND DEFOGGING

Automatic climate control system

To defog inside windshield

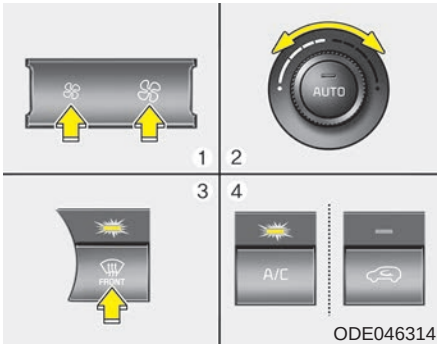

1. Set the fan speed to the desired position.
2. Select desired temperature.
3. Press the defroster button ( ).
4. The air conditioning will turn on according to the detected ambient temperature and outside (fresh) air position will be selected automatically.

If the air conditioning and outside (fresh) air position are not selected automatically, adjust the corresponding button manually. If the position is selected, lower fan speed is adjusted to a higher fan speed.

To defrost outside windshield

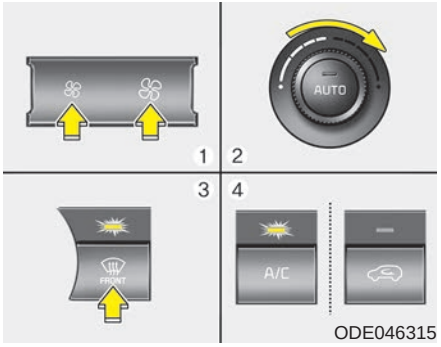

1. Set the fan speed to the highest position.
2. Set the temperature to the extreme hot position.
3. Press the defroster button ( ).
4. The air conditioning will turn on according to the detected ambient temperature and outside (fresh) air position will be selected automatically.

Operation tips

- For maximum defrosting, set the temperature control to the extreme right/hot position and the fan speed control to the highest speed.
- If warm air to the floor is desired while defrosting or defogging, set the mode to the floor-defrost position.
- Before driving, clear all snow and ice from the windshield, rear window, outside rear view mirrors, and all side windows.
- Clear all snow and ice from the hood and air inlet in the cowl grill to improve heater and defroster efficiency and to reduce the probability of fogging up the inside of the windshield.

⚠ WARNING - Windshield heating

Do not use the position during cooling operation in extremely humid weather. The difference between the temperature of the outside air and the windshield could cause the outer surface of the windshield to fog up, causing loss of visibility. In this case, set the mode selection to the position and fan speed control to the lower speed.

Defogging logic (if equipped)

To reduce the probability of fogging up the inside of the windshield, the air intake or air conditioning are controlled automatically according to certain conditions such as position. To cancel or return the defogging logic, do the following.

Automatic climate control system

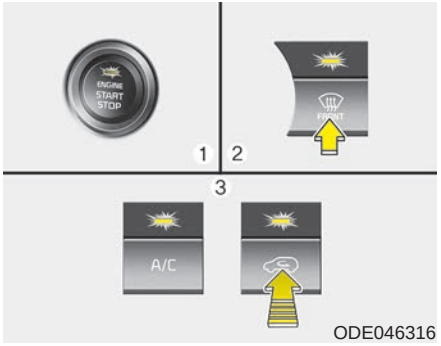

1. Turn the ignition switch to the ON position.
2. Press the defroster button ( ).
3. While pressing the air conditioning button (A/C), press the air intake control button at least 5 times within 3 seconds.

The indicator on the air intake button will blink 3 times. It indicates that the defogging logic is canceled or returned to the programmed status.

If the battery has been discharged or disconnected, it resets to the defog logic status.

Auto defogging system (if equipped)

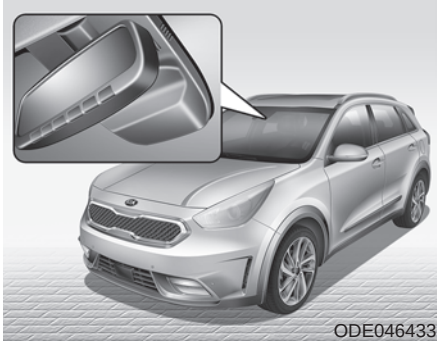

Auto defogging reduces the possibility of fogging up the inside of the windshield by automatically sensing the moisture of inside the windshield.

This indicator illuminates when the auto defogging system senses the moisture of inside the windshield and operates.

If more moisture is in the vehicle, higher steps operate as follow.

(For European region)

Step 1 : Blowing air flow toward the windshield

Step 2 : Increasing air flow toward the windshield

Step 3 : Operating the air conditioning.

Step 4 : Outside air position

(For except european region)

Step 1 : Outside air position

Step 2 : Operating the air conditioning

Step 3 : Blowing air flow toward the windshield

Step 4 : Increasing air flow toward the windshield

To cancel or reset the Auto Defogging System

Press the front windshield defroster button for 3 seconds when the ignition switch is in the ON position.

When the ADS system is canceled, Indicator on the button will blink 3 times per 0.5 sec.

When the ADS system is reset, Indicator on the button will blink 6 times per 0.25 sec.

CLEAN AIR (IF EQUIPPED)

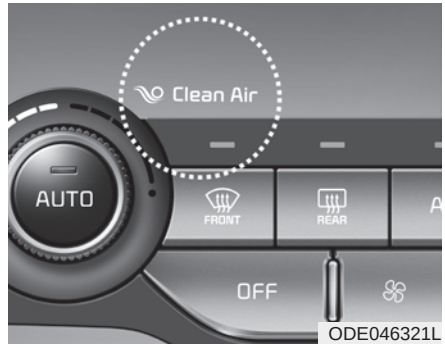

ODE046321L

When the ignition switch is in the ON position, the clean air function turns on automatically.

Also, the clean air function turns off automatically, when the ignition switch turns to the OFF position.

STORAGE COMPARTMENT

These compartments can be used to store small items.

⚠ CAUTION

- ***To avoid possible theft, do not leave valuables in the storage compartment.***
- ***Always keep the storage compartment covers closed while driving. Do not attempt to place so many items in the storage compartment that the storage compartment cover cannot close securely.***

⚠ WARNING - Flammable materials

Do not store cigarette lighters, propane cylinders, or other flammable/explosive materials in the vehicle. These items may catch fire and/or explode if the vehicle is exposed to hot temperatures for extended periods.

Center console storage

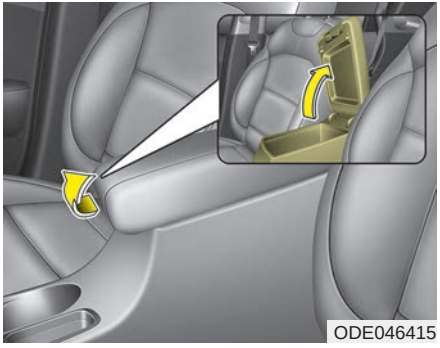

To open the center console storage, pull up the lever.

Glove box

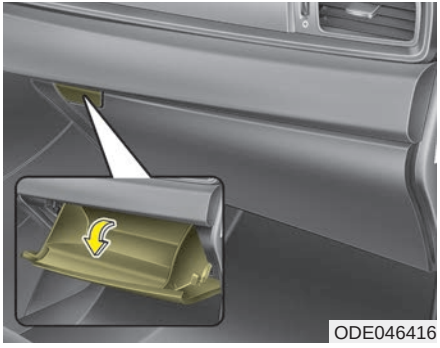

To open the glove box, push the lever and the glove box will automatically open. Close the glove box after use.

⚠ WARNING

To reduce the risk of injury in an accident or sudden stop, always keep the glove box door closed while driving.

⚠ CAUTION

Do not keep food in the glove box for a long time.

Sunglass holder

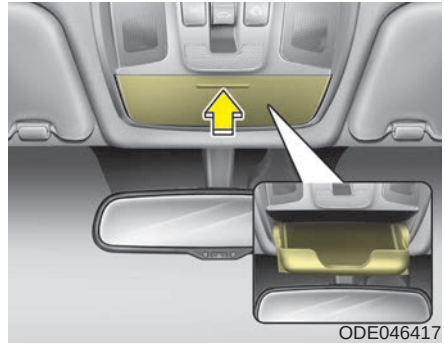

To open the sunglass holder, press the cover and the holder will slowly open. Place your sunglasses with the lenses facing out. To close the sunglass holder, push it up.

⚠ WARNING

- **Do not keep objects except sunglasses inside the sunglass holder. Such objects can be thrown from the holder in the event of a sudden stop or an accident, possibly injuring the passengers in the vehicle.**
- **Do not open the sunglass holder while the vehicle is moving. The rear view mirror of the vehicle can be blocked by an opened sunglass holder.**
- **Do not put the glasses forcibly into a sunglass holder to prevent breakage or deformation of the glasses. It may cause personal injury if you try to open it forcibly when the glasses are jammed in the holder.**

Luggage box

ODE046428L

You can place tools, etc. in the box for easy access.

Grasp the handle (1) on the edge of the cover and lift it.

INTERIOR FEATURES

Ashtray (if equipped)

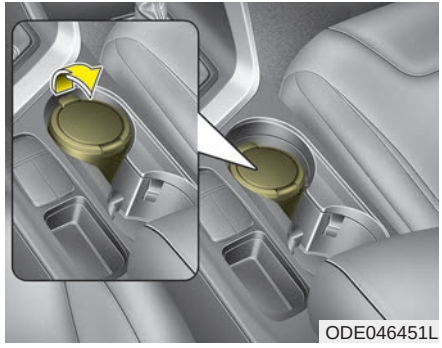

To use the ashtray, open the cover.

To clean or empty the ashtray, pull it out.

⚠ WARNING - Ashtray use

- **Do not use the vehicle's ashtrays as waste receptacles.**
- **Putting lit cigarettes or matches in an ashtray with other combustible materials may cause a fire.**

Cup holder

⚠ WARNING - Hot liquids

- **Do not place uncovered cups of hot liquid in the cup holder while the vehicle is in motion. If the hot liquid spills, you may burn yourself. Such a burn to the driver could lead to loss of control of the vehicle.**
- **To reduce the risk of a personal injury in the event of a sudden stop or collision, do not place uncovered or unsecured bottles, glasses, cans, etc., in the cup holder while the vehicle is in motion.**
- **If uncovered cups and cans containing any form of liquid are put into the front/center seat cup holders and the vehicle brakes heavily, the liquid may flow into the narrow openings around cup holders and console, and soak into the vehicle's internal electrical system.**

(Continued)

(Continued)

To avoid subsequent system malfunction, always firmly cover any container holding liquid.

⚠ WARNING

Keep cans or bottles out of direct sun light and do not put them in a vehicle that is heated up. It may explode.

✻ NOTICE

- **Keep your drinks sealed while driving to prevent spilling your drink. If liquid spills, it may get into the vehicle's electrical/electronic system and damage electrical/electronic parts.**
- **When cleaning spilled liquids, do not dry the cup holder at high temperature. This may damage the cup holder.**

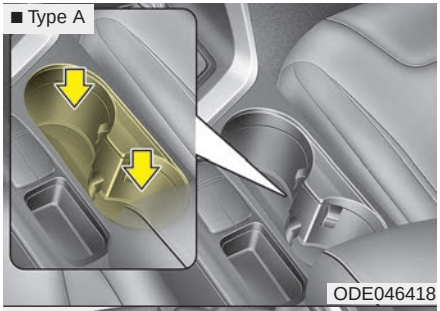

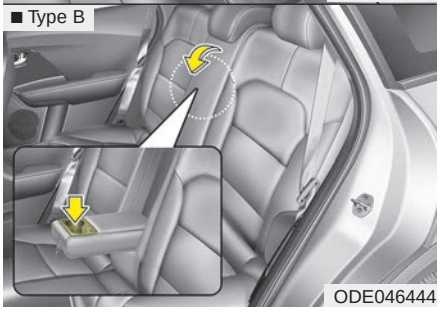

Cups or small beverage cans may be placed in the cup holders.

Sunvisor

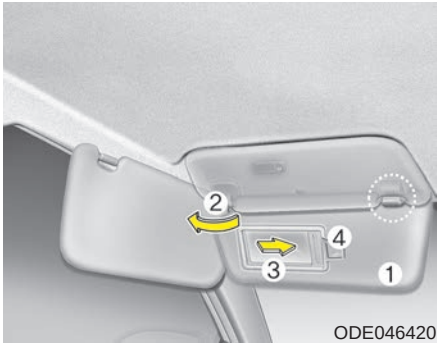

Use the sunvisor to shield direct light through the front or side windows.

To use the sunvisor, pull it downward.

To use the sunvisor for the side window, pull it downward, unsnap it from the bracket (1) and swing it to the side (2).

To use the vanity mirror, pull down the visor and slide the mirror cover (3).

The ticket holder (4) is provided for holding a tollgate ticket. (if equipped)

⚠ CAUTION - Vanity mirror lamp (if equipped)

If you use the vanity mirror lamp, turn off the lamp before returning the sunvisor to its original position, otherwise it could result in battery discharge and possible sunvisor damage.

Seat warmer (if equipped)

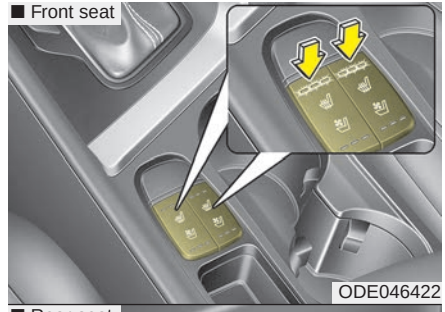

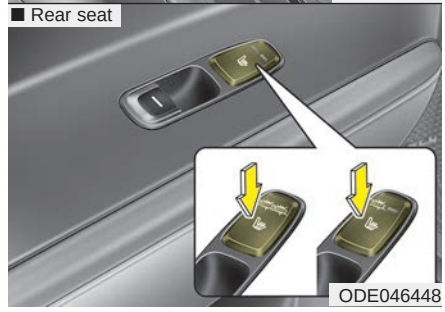

The seat warmer is provided to warm the front seats during cold weather. With the ignition switch in the ON position, push either of the switches to warm the driver's seat or the front passenger's seat.

During mild weather or under conditions where the operation of the seat warmer is not needed, keep the switches in the “OFF” position.

▶ Temperature control (Manual)

- Each time you press the switch, the temperature setting of the seat will change as follows :

■ Front seat

OFF→HIGH( )→MIDDLE( )→LOW( )

■ Rear seat

OFF→HIGH( )→LOW( )

- The seat warmer defaults to the OFF position whenever the ignition switch is turned on.

▶ Temperature control(Automatic)

The seat warmer starts to automatically control the seat temperature in order to prevent low-temperature burns after being manually turned ON.

■ Front seat

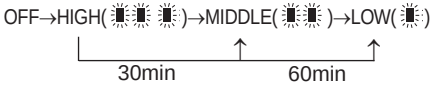

■ Rear seat

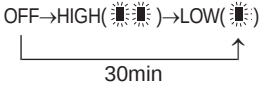

You may manually press the button to increase the seat temperature. However, it soon returns to the automatic mode again.

- When pressing the switch for more than 1.5 seconds with the seat warmer operating, the seat warmer will turn OFF.
- The seat warmer defaults to the OFF position whenever the Engine Start/Stop button is in the ON position.

✻ NOTICE

With the seat warmer switch in the ON position, the heating system in the seat turns off or on automatically depending on the seat temperature.

⚠ CAUTION

- ***When cleaning the seats, do not use an organic solvent such as paint thinner, benzene, alcohol and gasoline. Doing so may damage the surface of the heater or seats.***
- ***To prevent overheating the seat warmer, do not place anything on the seats that insulates against heat, such as blankets, cushions or seat covers while the seat warmer is in operation.***
- ***Do not place heavy or sharp objects on seats equipped with seat warmers. Damage to the seat warming components could occur.***
- ***Do not change the seat cover. It may damage the seat warmer or airventilation system.***

⚠ WARNING - Seat warmer burns

Passengers should use extreme caution when using seat warmers due to the possibility of excess heating or burns. The seat warmer may cause burns even at low temperatures, especially if used for long periods of time. In particular, the driver must exercise extreme care for the following types of passengers:

1. **Infants, children, elderly or handicapped persons, or hospital outpatients**
2. **Persons with sensitive skin or those that burn easily**
3. **Fatigued individuals**
4. **Intoxicated individuals**
5. **Individuals taking medication that can cause drowsiness or sleepiness (sleeping pills, cold tablets, etc.)**

Air ventilation seat (if equipped)

ODE046423

The temperature setting of the seat changes according to the switch position.

- If you want to warm your seat cushion, press the switch (red color).
- If you want to ventilate your seat cushion, press the switch (blue color).
- Each time you press the button, the airflow will change as follows:

OFF→HIGH( )→MIDDLE( )→LOW( )

- The seat warmer (with air ventilation) defaults to the OFF position whenever the ignition switch is turned on.

⚠ CAUTION

When cleaning the seats, do not use an organic solvent such as paint thinner, benzene, alcohol and gasoline. Doing so may damage the surface of the heater or seats.

Power outlet

ODE046421

The power outlet is designed to provide power for mobile telephones or other devices designed to operate with vehicle electrical systems. The devices should draw less than 10 amps with the engine running.

⚠ CAUTION

- *Use the power outlet only when the engine is running and remove the accessory plug after use. Using the accessory plug for prolonged periods of time with the engine off could cause the battery to discharge.*
- *Only use 12V electric accessories which are less than 10A in electric capacity.*
- *Adjust the air-conditioner or heater to the lowest operating level when using the power outlet.*
- *Close the cover when not in use.*
- *Some electronic devices can cause electronic interference when plugged into a vehicle's power outlet. These devices may cause excessive audio static and malfunctions in other electronic systems or devices used in your vehicle.*

(Continued)

(Continued)

- *Refrain from using the heater or A/C if you need to use the multipurpose socket. If the heater or A/C has to be used simultaneously, have it to the lowest setting.*
- *Some add-on electrical equipment will induce electromagnetic interference. This will lead to subsequent malfunction or hinder good reception of the Audio/Video and electrical system.*
- *Always make sure that electric add-ons are fully plugged into the multipurpose sockets. Insecure contacts may lead to electrical malfunctions.*

⚠ WARNING

Do not put a finger or a foreign element (pin, etc.) into a power outlet and do not touch with a wet hand. You may get an electric shock.

USB charger (if equipped)

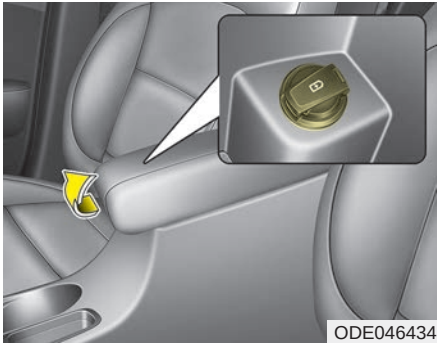

The USB charger is designed to recharge batteries of small size electrical devices using a USB cable. The electrical devices can be recharged when the Engine Start/Stop button is in ACC/ON/START position.

The battery charging state may be monitored on the electrical device.

Disconnect the USB cable from the USB port after use.

- Some devices are not supported for fast charging but will be charged with normal speed.
- Use the USB charger when the engine is running to prevent battery discharge.
- Only devices that fits the USB port can be used.
- The USB charger can be used only for battery charging purposes.
- Battery chargers cannot be charged.

AC inverter (if equipped)

ODE046034

The AC inverter supplies 220V/200W electric power to operate electric accessories or equipment.

If you wish to use the AC inverter, open up the AC inverter cover and connect a plug to it. The AC inverter supplies electric power when engine is running.

✻ NOTICE

- **Rated voltage : AC 220V**
- **Maximum electric power : 200W**
- **In order to avoid an electrical system failure, electric shock, etc., be sure to read owner's manual before use.**
- **Be sure to close the cover except for when in use.**

- To prevent the battery from being discharged, do not use the AC inverter while the engine is not running.
- After using an electric accessory or equipment, pull the plug out. Leaving the accessory or equipment plugged in for a long time may cause battery discharge.
- Do not use an electric accessory or equipment the power consumption of which is greater than 200W (220V).
- When the AC inverter input voltage is less than 11.3V, automatically turn off the power.

  AC inverter will operate as normal when the voltage is increased.
- When the AC inverter input voltage is less than 10.7V, power will turn off. The AC inverter will operate as normal when the voltage is increased.
- While the power consumption of some electrical devices/appliances may be within the AC inverter's electric power range, it may malfunction in below cases.

  - If the device/appliance requires high electric power for initial start up
  - If the device/appliance processes precise/very accurate data
  - If the device/appliance requires very stable supply of electricity

⚠ CAUTION - Electric accessory devices

- ***Do not use broken electric accessories which may damage the AC inverter and electrical systems of the vehicle.***
- ***Do not use two or more electric accessories at the same time. It may cause damage to the electrical systems of the vehicle.***

Wireless smart phone charging system (if equipped)

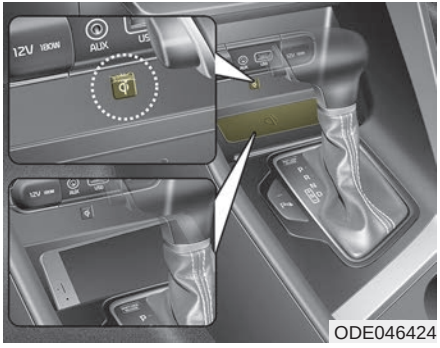

A wireless smart phone charging system located in front of the center console.

Firmly close all doors, and turn the ignition to ACC or IGN ON. To start wireless charging, place the smart phone equipped with wireless charging function on the wireless charging pad.

For best wireless charging results, place the smart phone on the center of the charging pad.

The wireless charging system is designed for one smart phone equipped with QI per single usage only. Please refer to the smart phone accessory cover or the smart phone manufacturer homepage to check whether your smart phone supports QI function.

Wireless smart phone charging

1. Remove any object on the smart phone charging pad including the smart key. If there is any foreign object on the pad other than a smart phone, the wireless charging function may not operate properly.
2. Place the smart phone on the center of the wireless charging pad.
3. The indicator light will change to orange once the wireless charging begins. After the charging is complete, the orange light will change to green.
4. You can choose to turn the wireless charging function to either ON or OFF by selecting the USM on the instrument cluster. (Please refer to “Instrument Cluster” for details).

If the wireless charging does not work, gently move your smart phone around the pad until the charging indicator light turns orange. Depending on the smart phone, the charging indicator light may not turn green even after the charging is complete.

If the wireless charging is not functioning properly, the orange light will blink and flash for ten seconds then turn off. In such cases, remove the smart phone from the pad and replace it on the pad again, or double check the charging status.

If you leave the smart phone on the charging pad when the vehicle ignition is in OFF, the vehicle will alert you through warning messages and sound (applicable for vehicles with voice guidance (function) after the ‘Good bye’ function on the instrument cluster ends.

⚠ **CAUTION**

- *When the interior temperature of the wireless charging system rises above a set temperature, the wireless charging will cease to function. After the interior temperature drops below the threshold, the wireless charging function will resume.*
- *If any metallic object such as coins is located between the wireless charging system and the smart phone, the charging may be disrupted. Also, the metallic object may heat up.*
- *If there is any metallic object between the smart phone and the wireless charging pad, immediately remove the smart phone. Remove the metallic object after it has completely cooled down.*
- *The wireless charging may not function properly when there is a heavy accessory cover on the smart phone.*

(Continued)

(Continued)

- *The wireless charging will stop when using the wireless smart key search function to prevent radio wave disruption.*
- *The wireless charging will stop when the smart key is moved out of the vehicle with the ignition in ON.*
- *The wireless charging will stop when any of the doors is opened (applicable for vehicles equipped with smart keys).*
- *The wireless charging will stop when the vehicle is turned OFF.*
- *The wireless charging will stop when the smart phone is not in complete contact with the wireless charging pad.*
- *Items equipped with magnetic components such as credit card, telephone card, bankbook, any transportation ticket and such may become damaged during wireless charging.*

(Continued)

(Continued)

- *Place the smart phone on the center of the charge pad for best results. The smart phone may not charge when placed near the rim of the charging pad. When the smart phone does get charged, it may heat up excessively.*
- *For smart phones without built-in wireless charging system, an appropriate accessory has to be equipped.*
- *Smart phones of some manufacturers may display messages on weak current. This is due to the particular characteristic of the smart phone and does not imply a malfunction on wireless charging function.*
- *The indicator light of some manufacturers' smart phones may still be orange after the smart phone is fully charged. This is due to the particular characteristic of the smart phone and not a malfunction of the wireless charging.*

(Continued)

(Continued)

- ***When any smart phone without a wireless charging function or a metallic object is placed on the charging pad, a small noise may sound. This small sound is due to the vehicle discerning compatibility of the object placed on the charging pad. It does not affect your vehicle or the smart phone in any way.***

Coat hook

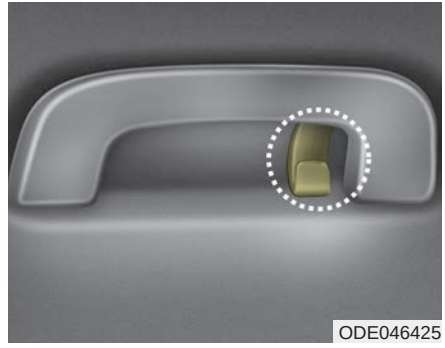

❊ This actual feature may differ from the illustration.

A Coat hook is next to the rear grab handle.

⚠ CAUTION

Do not hang heavy clothes, since those may damage the hook.

⚠ WARNING

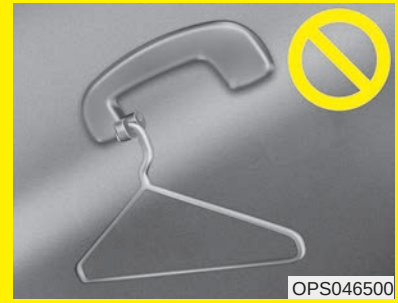

Do not hang other objects such as hangers or hard objects except clothes. Also, do not put heavy, sharp or breakable objects in the clothe pockets. In an accident or when the curtain air bag is inflated, it may cause vehicle damage or personal injury.

Floor mat anchor(s) (if equipped)

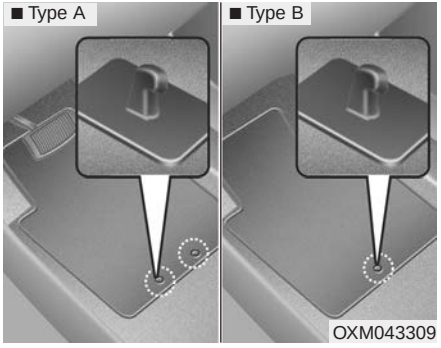

When using a floor mat on the front floor carpet, make sure it attaches to the floor mat anchor(s) in your vehicle. This keeps the floor mat from sliding forward.

⚠ WARNING

The following must be observed when installing ANY floor mat to the vehicle.

- **Ensure that the floor mats are securely attached to the vehicle's floor mat anchor(s) before driving the vehicle.**
- **Do not use ANY floor mat that cannot be firmly attached to the vehicle's floor mat anchors.**
- **Do not stack floor mats on top of one another (e.g. all-weather rubber mat on top of a carpeted floor mat). Only a single floor mat should be installed in each position.**

IMPORTANT - Your vehicle was manufactured with driver's side floor mat anchors that are designed to securely hold the floor mat in place. To avoid any interference with pedal operation, Kia recommends that the Kia floor mat designed for use in your vehicle be installed.

Luggage net holder (if equipped)

To keep items from shifting in the cargo area, you can use the holders located in the cargo area to attach the luggage net.

If necessary, we recommend that you contact an authorized Kia dealer.

⚠ CAUTION

To prevent damage to the goods or the vehicle, care should be taken when carrying fragile or bulky objects in the luggage compartment.

⚠ WARNING

To avoid eye injury, DO NOT overstretch the luggage net. ALWAYS keep your face and body out of the luggage net's recoil path. DO NOT use the luggage net when the strap has visible signs of wear or damage.

Cargo security screen (if equipped)

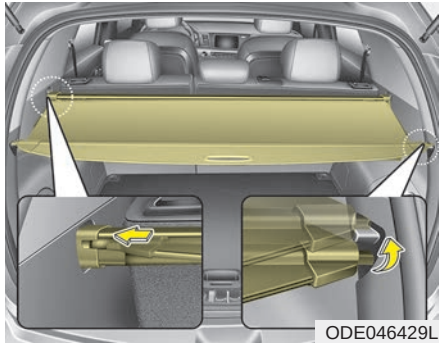

Use the cargo security screen to hide items stored in the cargo area.

To use the cargo security screen, pull the handle backward and insert the edges into the slots.

⚠ WARNING

- **Do not place objects on the cargo security screen. Such objects may be thrown about inside the vehicle and possibly injure vehicle occupants during an accident or when braking.**
- **Never allow anyone to ride in the luggage compartment. It is designed for luggage only.**
- **Maintain the balance of the vehicle and locate the weight as far forward as possible.**

⚠ CAUTION

Since the cargo security screen may be damaged or malformed, do not put the luggage on it when it is used.

EXTERIOR FEATURES

Roof rack (if equipped)

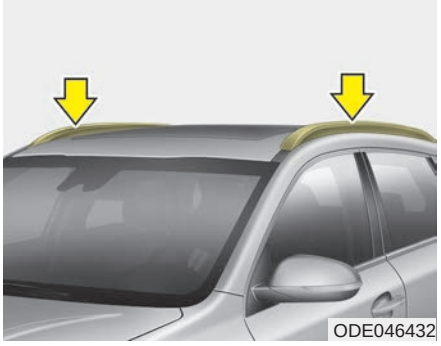

If the vehicle has a roof rack, you can load cargo on top of your vehicle.

Crossbars and fixing components needed to install the roof rack on your vehicle may be obtained from an authorized Kia dealer or other qualified shop.

✻ NOTICE

- **The crossbars (if equipped) should be placed in the proper load carrying positions prior to placing items onto the roof rack.**
- **If the vehicle is equipped with a sunroof, be sure not to position cargo onto the roof rack in such a way that it could interfere with sunroof operation.**
- **When the roof rack is not being used to carry cargo, the crossbars may need to be repositioned if wind noise is detected.**

⚠ CAUTION

- ***When carrying cargo on the roof rack, take the necessary precautions to make sure the cargo does not damage the roof of the vehicle.***
- ***When carrying large objects on the roof rack, make sure they do not exceed the overall roof length or width.***
- ***When you are carrying cargo on the roof rack, do not operate the sunroof (if equipped).***

⚠ WARNING

- **The following specification is the maximum weight that can be loaded onto the roof rack. Distribute the load as evenly as possible across the crossbars (if equipped) and roof rack and secure the load firmly.**

ROOF RACK	100 kg (220 lbs.) EVENLY DISTRIBUTED

Loading cargo or luggage in excess of the specified weight limit on the roof rack may damage your vehicle.

- **The vehicle center of gravity will be higher when items are loaded onto the roof rack. Avoid sudden starts, braking, sharp turns, abrupt maneuvers or high speeds that may result in loss of vehicle control or rollover resulting in an accident.**

(Continued)

(Continued)

- **Always drive slowly and turn corners carefully when carrying items on the roof rack. Severe wind updrafts, caused by passing vehicles or natural causes, can cause sudden upward pressure on items loaded on the roof rack. This is especially true when carrying large, flat items such as wood panels or mattresses. This could cause the items to fall off the roof rack and cause damage to your vehicle or others around you.**
- **To prevent damage or loss of cargo while driving, check frequently before or while driving to make sure the items on the roof rack are securely fastened.**

Audio system

Audio system. 5-2
- Antenna 5-2
- Steering wheel audio controls. 5-3
- AUX, USB port 5-4
- How vehicle radio works 5-4

Audio (With Touch Screen). 5-8
- Feature of Your Audio. 5-9
- Radio. 5-16
- Media 5-18
- Phone 5-31
- Voice Recognition 5-40
- Setup. 5-50

Declaration of Conformity 5-53
- CE for EU. 5-53
- NCC for Taiwan. 5-54
- TRA for OMAN. 5-55

AUDIO SYSTEM

✻ NOTICE

If you install an after market HID head lamp, your vehicle's audio and electronic device may malfunction.

✻ If your vehicle is equipped with AVN(Audio, Video and Navigation) system, refer to a separately supplied manual for detailed information.

Antenna

Pole type antenna

■ Type A

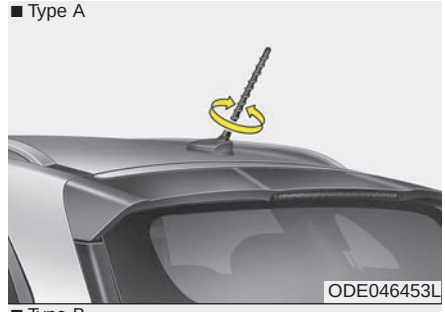

■ Type B

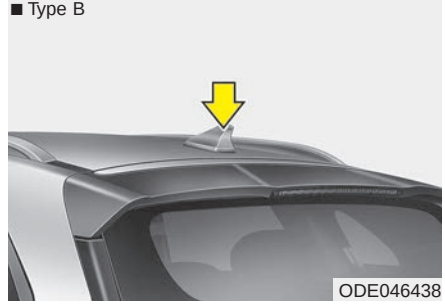

Your vehicle uses a roof antenna to receive both AM and FM broadcast signals. This antenna pole is removable. To remove the antenna pole, turn it counterclockwise. To install the antenna, turn it clockwise.

Shark fin antenna (if equipped)

The shark fin antenna will receive the transmit data.

⚠ CAUTION - Pole type antenna

- ***Before entering a place with a low height clearance or a car wash, remove the antenna pole by rotating it counterclockwise. If not, the antenna may be damaged.***
- ***When reinstalling your antenna pole, it is important that it is fully tightened and adjusted to the upright position to ensure proper reception. But it could be removed when parking the vehicle or when loading cargo on the roof rack.***
- ***When cargo is loaded on the roof rack, do not place the cargo near the antenna pole to ensure proper reception.***

Steering wheel audio controls (if equipped)

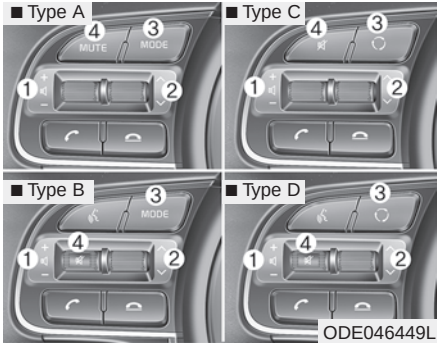

The steering wheel may incorporate audio control buttons.

⚠ CAUTION

Do not operate audio remote control buttons simultaneously.

VOLUME (+ / –) (1)

- Press the lever upward (+) to increase the volume.
- Press the lever downward (–) to decrease the volume.

SEEK/PRESET (∧ / ∨) (2)

The SEEK/PRESET lever has different functions based on the system mode. For the following functions the lever should be pressed for 0.8 seconds or more.

RADIO mode

It will function as the AUTO SEEK select button.

USB/iPod® mode

It will function as the FF/REW button.

If the SEEK/PRESET button is pressed for less than 0.8 seconds, it will work as follows in each mode.

RADIO mode

It will function as the PRESET STATION buttons.

USB/iPod® mode

It will function as TRACK UP/DOWN button.

MODE ( ) (3)

Press the button to change audio source.

FM ➞ AM ➞ DAB* ➞ USB ➞ iPod® ➞ BT Audio ➞ AUX ➞ MY MUSIC

* : if equipped

MUTE ( ) (4)

- Press the button to mute the sound.
- Press the button to turn off the microphone during a telephone call.

Detailed information for audio control buttons are described in the following pages in this section.

AUX, USB port

ODE046439L

You can use the AUX port to connect audio devices and the USB port to plug in a USB device or iPod®.

✻ NOTICE

When using a portable audio device connected to the power outlet, noise may occur during playback. If this happens, use the power source of the portable audio device.

How vehicle radio works

FM reception

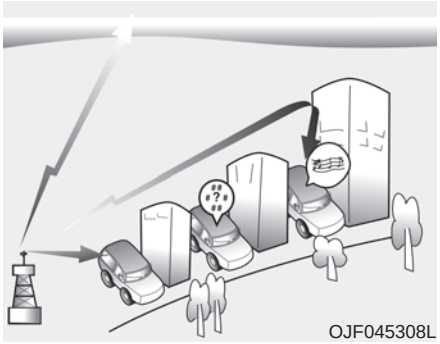
OJF045308L

AM and FM radio signals are broadcast from transmitter towers located around your city. They are intercepted by the radio antenna on your vehicle. This signal is then received by the radio and sent to your vehicle speakers.

When a strong radio signal has reached your vehicle, the precise engineering of your audio system ensures the best possible quality reproduction. However, in some cases the signal coming to your vehicle may not be strong and clear.

This can be due to factors, such as the distance from the radio station, closeness of other strong radio stations or the presence of buildings, bridges or other large obstructions in the area.

AM (MW, LW) reception

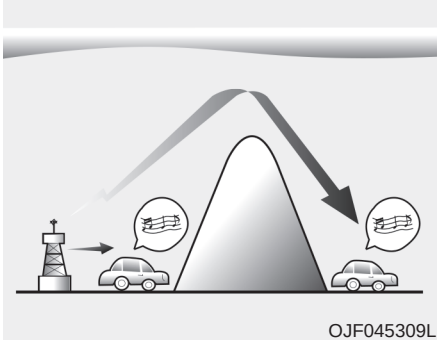

AM broadcasts can be received at greater distances than FM broadcasts. This is because AM radio waves are transmitted at low frequencies. These long, low frequency radio waves can follow the curvature of the earth rather than travelling straight out into the atmosphere. In addition, they curve around obstructions so that they can provide better signal coverage.

FM radio station

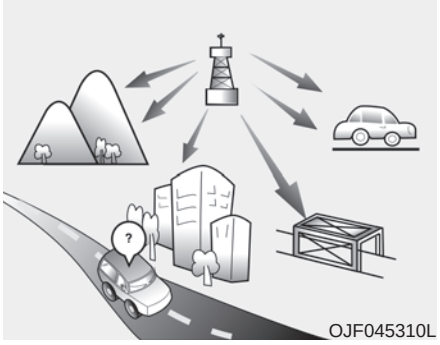

FM broadcasts are transmitted at high frequencies and do not bend to follow the earth's surface. Because of this, FM broadcasts generally begin to fade at short distances from the station. Also, FM signals are easily affected by buildings, mountains, or other obstructions. These can result in certain listening conditions which might lead you to believe a problem exists with your radio. The following conditions are normal and do not indicate radio trouble:

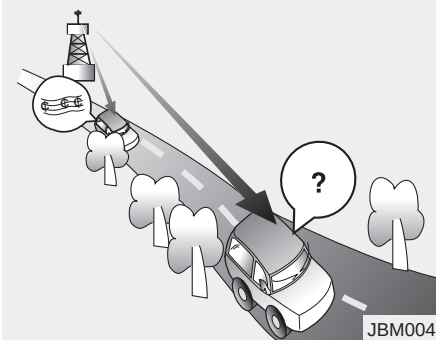

- Fading - As your vehicle moves away from the radio station, the signal will weaken and sound will begin to fade. When this occurs, we suggest that you select another station with a stronger signal.
- Flutter/Static - Weak FM signals or large obstructions between the transmitter and your radio can disturb the signal causing static or fluttering noises to occur. Reducing the treble level may lessen this effect until the disturbance clears.

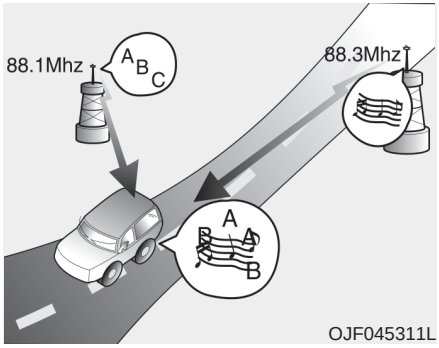

- Station Swapping - As a FM signal weakens, another more powerful signal near the same frequency may begin to play. This is because your radio is designed to lock onto the clearest signal. If this occurs, select another station with a stronger signal.
- Multi-Path Cancellation - Radio signals being received from several directions can cause distortion or fluttering. This can be caused by a direct and reflected signal from the same station, or by signals from two stations with close frequencies. If this occurs, select another station until the condition has passed.

Using a cellular phone or a two-way radio

When a cellular phone is used inside the vehicle, noise may be produced from the audio system. This does not mean that something is wrong with the audio equipment. In such a case, use the cellular phone at a place as far as possible from the audio equipment.

⚠ CAUTION

When using a communication system such as a cellular phone or a radio set inside the vehicle, a separate external antenna must be fitted. When a cellular phone or a radio set is used with an internal antenna alone, it may interfere with the vehicle's electrical system and adversely affect safe operation of the vehicle.

⚠ WARNING

Do not use a cellular phone while driving. Stop at a safe location to use a cellular phone.

iPod®

iPod® is a trademark of Apple Inc.

Bluetooth® Wireless Technology

The Bluetooth® word mark and logos are registered trademarks owned by Bluetooth® SIG, Inc. and any use of such marks by Kia is under license.

Other trademarks and trade names are those of their respective owners.

AUDIO (With Touch Screen)

■ Type 1

■ Type 2

(With *Bluetooth*® Wireless Technology)

G5H4G0000EE/G5H4G0001EE

Feature of Your Audio

Head unit

❊ The actual features in the vehicle may differ from the illustration.

(1) **LCD screen**

- Tap the screen to select a button.

(2) **POWER/VOL** knob

- Turn to adjust the volume.
- Press to turn the device on or off.

(3) **RADIO**

- Start FM, AM or DAB Radio*.

* if equipped

(4) **MEDIA**

- Select USB, iPod®, Bluetooth® Audio, AUX or My Music.
- Display the media menu when two or more media are connected or when the **[MEDIA]** button is pressed in media mode.

(5) **SEEK/TRACK**

- Search for frequencies in radio mode.
- Change the current song in media mode.

■ Type 1

■ Type 2

(6) **PHONE**

- Start Bluetooth® Phone mode.

(7) **SETUP**

- Access Display, Sound, Date/Time, Phone, System, Screensaver (Screen Saver) and Display Off settings.

(8) **TUNE** knob

- Turn to navigate through the stations/songs list.
- Press to select an item.

Steering wheel remote control

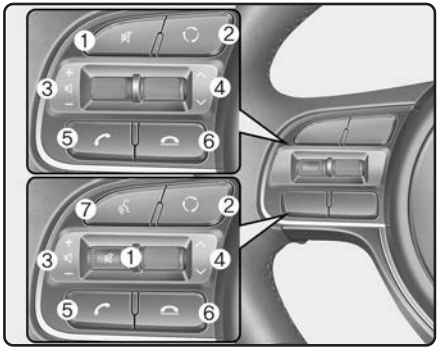

❊ The actual features in the vehicle may differ from the illustration.

(1) **MUTE**

- Press to mute audio output.

(2) **MODE**

- Press the button to change the mode in the following order: Radio ➟ Media.

(3) **VOLUME**

- Press to adjust the volume.

(4) **UP/DOWN**

- Press the button in radio mode to search Presets.
- Press and hold the button in radio mode to search frequencies.
- Press the button in media mode to change the current song.
- Press and hold the button in media mode to quick search through songs.

(5) **CALL**

- Pressing the button
  - If not in Bluetooth® Handsfree mode or receiving a phone call

    First press: Display Dial Number screen

    Second press: Automatically display the most recently Dialed Call number

    Third press: Dial the phone number entered
  - Press in the Incoming Call notification screen to accept the phone call.
  - Press in Bluetooth® Handsfree mode to switch to the waiting call.
- Pressing and holding the button
  - If not in Bluetooth® Handsfree mode or receiving a phone call, the most recently Dialed Call number is dialed.
  - Press in Bluetooth® Handsfree mode to transfer the call to your cell phone.
  - Press in cell phone mode to switch to Bluetooth® Handsfree mode.

(6) **END**

- Press in Bluetooth® Handsfree mode to end the phone call.
- Press in the incoming call screen to reject the call.

(7) **VOICE**

- Pressing the button
  - If voice recognition is not active: Start voice recognition.
  - During the notification message after voice recognition is started: The notification message is skipped, and voice command standby mode is activated.
  - While standing by for a voice command: Extend voice command standby time.
- Pressing and holding the button: End voice recognition.

Information on status icons

Icons showing audio status are shown in the upper-right corner of the screen.

Icon		Function
	Mute	Mute engaged
	Battery	Remaining battery life of a connected Bluetooth® device
	Handsfree + Audio streaming connection	Bluetooth® Handsfree call and audio streaming available
	Handsfree connection	Bluetooth® Handsfree call available
	Bluetooth® audio streaming	Bluetooth® audio streaming available
	Downloading contacts	Downloading contacts through Bluetooth® wireless communications
	Downloading call history	Downloading call history through Bluetooth® wireless communications
	Line busy	Phone call in progress
	Mute mic	Mic muted during a call (caller cannot hear your voice)
	Phone signal strength	Display the phone signal strength for a cell phone connected by Bluetooth®

⚠ WARNING
- Audio System Safety Warnings

- Do not stare at the screen while driving. Staring at the screen for prolonged periods of time could lead to traffic accidents.
- Do not disassemble, assemble, or modify the audio system. Such acts could result in accidents, fire, or electric shock.
- Using the phone while driving may lead to a lack of attention of traffic conditions and increase the likelihood of accidents. Use the phone feature after parking the vehicle.
- Exercise caution not to spill water or introduce foreign objects into the device. Such acts could lead to smoke, fire, or product malfunction.

(Continued)

(Continued)

- Please refrain from use if the screen is blank or no sound can be heard as these signs may indicate product malfunction. Continued use in such conditions could lead to accidents (fires, electric shock) or product malfunctions.
- Do not touch the antenna during thunder or lightening as such acts may lead to lightning induced electric shock.
- Do not stop or park in parking-restricted areas to operate the product. Such acts could lead to traffic accidents.
- Use the system with the vehicle ignition turned on. Prolonged use with the ignition turned off could result in battery discharge.

⚠ WARNING- Distracted Driving

Driving while distracted can result in a loss of vehicle control that may lead to an accident, severe personal injury, and death. The driver's primary responsibility is in the safe and legal operation of a vehicle, and use of any handheld devices, other equipment, or vehicle systems which take the driver's eyes, attention and focus away from the safe operation of a vehicle or which are not permissible by law should never be used during operation of the vehicle.

⚠ **CAUTION**

- *Operating the device while driving could lead to accidents due to a lack of attention to external surroundings. First park the vehicle before operating the device.*
- *Adjust the volume to levels that allow the driver to hear sounds from outside of the vehicle. Driving in a state where external sounds cannot be heard may lead to accidents.*
- *Pay attention to the volume setting when turning the device on. A sudden output of extreme volume upon turning the device on could lead to hearing impairment. (Adjust the volume to a suitable levels before turning off the device.)*

(Continued)

(Continued)

- *If you want to change the position of device installation, please inquire with your place of purchase or service maintenance center. Technical expertise is required to install or disassemble the device.*
- *Turn on the car ignition before using this device. Do not operate the audio system for long periods of time with the ignition turned off as such operations may lead to battery discharge.*
- *Do not subject the device to severe shock or impact. Direct pressure onto the front side of the monitor may cause damage to the LCD or touch screen.*

(Continued)

(Continued)

- *When cleaning the device, make sure to turn off the device and use a dry and smooth cloth. Never use tough materials, chemical cloths, or solvents (alcohol, benzene, thinners, etc.) as such materials may damage the device panel or cause color/quality deterioration*
- *Do not place beverages close to the audio system. Spilling beverages may lead to system malfunction.*
- *In case of product malfunction, please contact your place of purchase or After Service center.*
- *Placing the audio system within an electromagnetic environment may result in noise interference.*

Radio

FM/AM (with RDS)

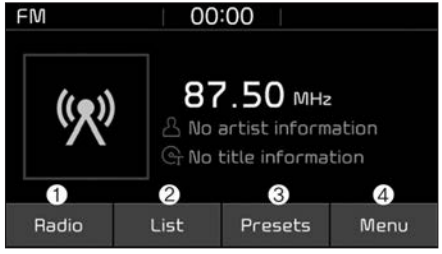

DAB (if equipped)

(1) Radio

Switch between FM, AM and DAB*.

* if equipped

(2) List

View all available stations.

(3) Presets

View all presets.

(4) Menu

Navigate to the menu screen.

Switching between FM, AM and DAB*

- Press the **[RADIO]** button on the audio system to switch between FM, AM and DAB*.
- Press the [Radio] on the screen to switch between FM, AM and DAB*.

* if equipped

Searching channels

Press the **[SEEK/TRACK]** button to search channels.

List

A list of all stations available in the vehicle's current location is displayed. Press the desired station.

Favourite stations can be saved to [Presets] by pressing the [+].

Presets

Save up to 40 frequently used stations.

To listen to a preset, press the desired station list.

Press and hold the desired slot from 1 through 40. This saves the current station in the selected slot.

If the slot is empty, simply pressing saves the station to the slot.

Menu

- Traffic Announcement (TA): Enable or disable Traffic Announcements.
- Scan: All available stations are played for five seconds each.
- Sound Settings: Audio sound settings can be changed.

FM/AM (without RDS)

(1) Band

Switch between FM, AM.

(2) Presets

View all presets.

(3) List

View all available stations.

(4) Menu

Navigate to the menu screen.

Switching between FM, AM

- Press the **[RADIO]** button on the audio system to switch between FM, AM.
- Press the [Radio] on the screen to switch between FM, AM.

Searching channels

Press the **[SEEK/TRACK]** button to search channels.

List

A list of all stations available in the vehicle's current location is displayed. Press the desired station.

Favourite stations can be saved to [Presets] by pressing the [save].

Presets

Save up to 40 frequently used stations.

To listen to a preset, press the desired station list.

Press and hold the desired slot from 1 through 40. This saves the current station in the selected slot.

If the slot is empty, simply pressing saves the station to the slot.

Menu

- Scan: All available stations are played for five seconds each.
- Sound Settings: Audio sound settings can be changed.

Media

MP3

Supported audio formats

Compressed audio formats	MPEG1 Audio Layer3
	MPEG2 Audio Layer3
	MPEG2.5 Audio Layer3
	Windows Media Audio Ver 7.X & 8.X

✻ NOTICE

File formats other than the formats above may not be recognized or playable. Information such as filename may not be displayed.

Range of supported compressed file types

1. Bitrate range (Kbps)

BIT RATE(kbps)	MPEG1	MPEG2	MPEG2.5	WMA
	Layer3			High Range
	32	8	8	48
	40	16	16	64
	48	24	24	80
	56	32	32	96
	64	40	40	128
	80	48	48	160
	96	56	56	192
	112	64	64	
	128	80	80	
	160	96	96	
	192	112	112	
	224	128	128	
	256	144	144	
	320	160	160	

2. Sampling frequency (Hz)

MPEG1	MPEG2	MPEG2.5	WMA
44100	22050	11025	32000
48000	24000	12000	44100
32000	16000	8000	48000

- The sound quality of MP3/WMA compressed files may vary depending on the bitrate. (A higher bitrate can have better sound quality.)
- The product only recognizes files with the MP3 or WMA extension. Files without one of these extensions are not recognized.

3. Number of recognizable folders and files

- Folders: 2,000 for USB
- Files: 6,000 for USB
- No recognition limit for folder hierarchies

4. Character display range (Unicode)
- Filenames: Up to 64 English characters (64 Korean characters)
- Filenames: Up to 32 English characters (32 Korean characters)

Languages supported (Unicode support)
- Korean: 2,604 characters
- English: 94 characters
- Common Chinese characters: 4,888 characters
- Special symbols: 986 characters

✻ NOTICE

Japanese/Simplified Chinese characters are not supported.

✻ NOTICE - Using the USB Devices

- Starting the vehicle while a USB device is connected can damage the device. Please disconnect USB devices before starting the vehicle.
- Starting the vehicle or stopping the engine while an external USB device is connected can result in failure of the external USB device to operate.
- Be cautious of static electricity when connecting/disconnecting external USB devices.
- An encrypted MP3 player is not recognized when connected as an external device.
- External USB devices may not be recognized, depending on the state of the external USB device.
- Only products with byte/sectors formatted at 4 KB or lower are recognized.
- Only USB devices in FAT12/16/32 format are recognized; NTFS and ExFAT file systems are not recognized.
- Some USB devices are not recognized due to compatibility issues.

(Continued)

(Continued)

- Do not touch the USB connections.
- Connecting and disconnecting USB devices rapidly over a short period of time can cause equipment failure.
- Abnormal sounds may be audible when the USB device is disconnected.
- Turn the audio off before connecting or disconnecting external USB devices.
- Recognition may take longer depending on the type, capacity or file format of the external USB device. This is not a product malfunction.
- Use of USB devices for purposes other than playing music files is prohibited.
- Image display and video playback are not supported.
- Use of USB accessories, including charge and heat though the USB I/F, can lead to reduced product performance or malfunctions. Do not use USB devices or accessories for these purposes.

(Continued)

(Continued)

- Use of aftermarket USB hubs and extension cables can result in the vehicle's audio system failing to recognize your USB device. Connect the USB device directly to the multimedia port of your vehicle.
- When using high-capacity USB devices with logical drive divisions, only files saved on the highest level logical drive can be played.
  If applications are loaded on a USB drive, file playback may fail.
- Some MP3 players, cell phones, digital cameras, etc. (USB devices that are not recognized as mobile storage) may not operate normally when connected.
- USB charging may not be supported by some mobile devices.
- Operation is guaranteed only for standard (Metal Cover Type) USB Memory drives.
- Operation of HDD, CF, SD and memory stick devices is not guaranteed.

(Continued)

(Continued)

- **DRM (Digital Rights Management) files cannot be played.**
- **SD-type USB memory, CF-type USB memory, and other USB memory devices that require adapters for connection are not supported.**
- **Proper operation of USB HDDs or USB drives with connectors that loosen due to vehicle vibrations is not guaranteed. (iStick, etc.)**
- **USB products that are used as key chains or cell phone accessories may damage the USB jack and affect proper file playback. Please refrain from use. Use only products with plug connectors, as shown in the following illustration.**

- **When MP3 devices or cell phones are connected simultaneously through AUX, BT Audio and USB modes, a popping noise or malfunction may occur.**

USB

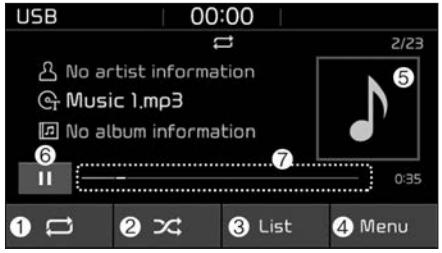

(1) Repeat

Enable/disable repeat.

(2) Shuffle

Enable/disable shuffle play.

(3) List

View a list of all songs.

(4) Menu

Navigate to the menu screen.

(5) Album Image

View song info.

(6) Pause

Pause or play music.

(7) Playback progress

Press to skip to the desired location.

Playback

- Press the **[MEDIA]** button, and select [USB].
- Connect a USB drive to the USB port to automatically play files on the USB drive.

Changing songs

- Press the **[SEEK/TRACK]** button to play the previous or next song.
- Press and hold the **[SEEK/TRACK]** button to rewind or fast forward the currently playing song.
- Search songs by turning **TUNE** knob, and press the knob to play.

Selecting songs from a list

Press the [List] to see a list of songs available for play.

Select and play the desired song.

Repeat play

Press the [Repeat] to enable or disable ‘Repeat all’, ‘Repeat current song’, or ‘Repeat folder’.

- Repeat all: All songs in the playlist are repeated.
- Repeat current song: The currently playing song is repeated.
- Repeat folder: All songs in the current folder are repeated.

✻ NOTICE

The repeat folder function is available only when songs are playing from the [File] category under [List].

Shuffle play

Press the [Shuffle] to enable/disable 'Shuffle' play.

- Shuffle: Songs are played in random order.

Menu

Press the [Menu], and select the desired function.

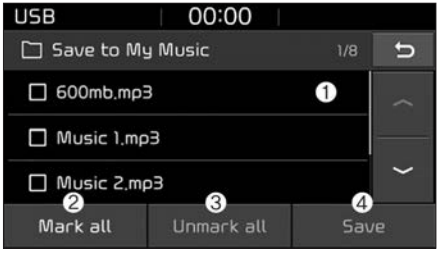

- Save to My Music: Songs on your USB device can be saved to My Music.

(1) File: Select a file to save.

(2) Mark all(Mark All): Select all files.

(3) Unmark all(Unmark All): Deselect all files.

(4) Save: Save the selected file(s).

- Select the files you want to save, and press the [Save]. This saves the selected files to My Music.
- Saving is canceled if voice recognition is activated or phone calls are received or made while saving.
- Up to 6,000 files can be saved.
- The currently playing file on the USB device cannot be changed while saving.
- My Music cannot be used while saving.
- Up to 700 MB can be saved.

- Information: Detailed information on the currently playing song is displayed.
- Scan: All songs are played for 10 seconds each.
- Sound Settings: Audio sound settings can be changed.

✻ NOTICE - Using the iPod® Devices

- To use the audio system's iPod® control function, use the dedicated cable provided with your iPod®.
- Connecting the iPod® to the vehicle during play may result in a loud noise that lasts about one to two seconds. Connect the iPod® to the vehicle after stopping or pausing play.
- Connect the iPod® with the vehicle in the ACC ON state to begin charging.
- When connecting the iPod® cable, be sure to fully push the cable into the port.
- When EQ effects are enabled simultaneously on external devices, such as iPod®s and the audio system, the EQ effects may overlap, causing sound quality deterioration or distortion. Deactivate the EQ function for all external devices, if possible.
- Noise may occur when your iPod® or the AUX port is connected. Disconnect and store separately when not in use.

(Continued)

(Continued)

- There may be noise if the audio system is used with an iPod® or AUX external device connected to the power jack. In these cases, disconnect the iPod® or external device from the power jack.
- Play may be interrupted, or device malfunctions may occur depending on the characteristics of your iPod®/iPhone®.
- Play may fail if your iPhone® is connected through both Bluetooth® and USB. In this case, select Dock connector or Bluetooth® on your iPhone® to change the sound output settings.
- If your software version does not support the communication protocol or your iPod® is not recognized due to device failure, anomalies or defects, iPod® mode cannot be used.
- iPod® nano (5th generation) devices may not be recognized if the battery is low. Charge sufficiently before use.

(Continued)

(Continued)

- The search and song play order in the iPod® device may be different from the search order in the audio system.
- If the iPod® has failed due to an internal defect, please reset the iPod® (consult your iPod® manual).
- Depending on the software version, the iPod® may fail to sync with the system. If the media is removed or disconnected before recognition, the previous mode may not be restored (iPad® cannot be charged).
- Cables other than the 1-meter cable provided with iPod®/iPhone® products may not be recognized.
- When other music apps are used on your iPod®, the system sync function may fail due to malfunction of the iPod® application.

iPod®

(1) Repeat

Enable/disable repeat.

(2) Shuffle

Enable/disable shuffle play.

(3) List

View a list of all songs.

(4) Menu

Navigate to the menu screen.

(5) Album Image

View song info.

(6) Pause

Pause or play music.

(7) Playback progress

Press to skip to the desired location.

Playback

- Connect your iPod® to the audio USB port, press the **[MEDIA]** button, and select [iPod®].

Changing songs

- Press the **[SEEK/TRACK]** button to play the previous or next song.
- Press and hold the **[SEEK/TRACK]** button to rewind or fast forward the currently playing song.
- Search songs by turning the **TUNE** knob, and press the knob to play.

Selecting songs from a list

Press the [List] to see a list of songs available for play.

Select and play the desired song.

Repeat play

Press the [Repeat] to enable or disable 'Repeat current song'.

- Repeat all: Repeat all songs in the current category.
- Repeat current song: The currently playing song is repeated.

Shuffle play

Press the [Shuffle] to enable/disable 'Shuffle' play.

- Shuffle: Songs are played in random order.

Menu

Press the [Menu], and select the desired function.

- Information: Detailed info on the currently playing song is displayed.
- Sound Settings: Audio sound settings can be changed.

When other music programs are running

When songs saved on your iPod® are playing through a separate music app, the following screen is displayed.

(1) Play/Pause: Pause or play music.

(2) Play iPod® files(Play iPod® Files): Play music saved on your iPod®.

(3) Album Image: View playback info.

✻ NOTICE

Operation cannot be carried out correctly due to iPod® application malfunction.

Playing iPod® files

- Select [Play iPod® files] to play songs saved on your iPod®.

  If there are no songs saved on your iPod®, the [Play iPod® files(Play iPod® Files)] is disabled.

✻ NOTICE - Using Bluetooth® (BT) Audio

- Bluetooth® Audio mode can only be used if a Bluetooth®-enabled phone is connected. Only devices that support Bluetooth® audio can be used.
- If the Bluetooth®-enabled phone is disconnected during play, the music stops.
- When the TRACK UP/DOWN buttons are used during Bluetooth® audio streaming, a popping noise or sound interruptions may occur, depending on the cell phone device.
- Depending on the cell phone model, the audio streaming function may not be supported.
- If a phone call is made or received when music is playing in Bluetooth® Audio mode, the call may mix with the music.
- When returning to Bluetooth® Audio mode after ending a call, play might not resume automatically for some cell phone models.

⚠ CAUTION

- *Bluetooth® Wireless Technology Handsfree is a feature that enables drivers to practice safe driving. Connecting the car audio system with a Bluetooth® Wireless Technology phone allows the user to conveniently make calls, receive calls, and manage the phone book. Before using the Bluetooth® Wireless Technology, carefully read the contents of this user's manual.*
- *Excessive use or operations while driving may lead to negligent driving practices and be the cause of accidents.*
- *Do not operate the device excessively while driving.*
- *Viewing the screen for prolonged periods of time is dangerous and may lead to accidents.*
- *When driving, view the screen only for short periods of time.*

Bluetooth® (BT) Audio

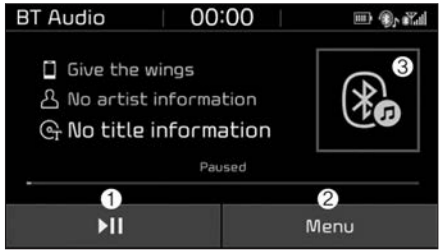

(1) Play/Pause

Pause or play music.

(2) Menu

Navigate to the menu screen.

(3) Album Image

View song info.

✻ NOTICE

- **Some cell phone models may not support particular functions.**
- **Bluetooth® audio volume is synced with cell phone media volume.**

Playback

- Press the **[MEDIA]** button, and select [BT Audio].

Changing songs

- Press the **[SEEK/TRACK]** button to play the previous or next song.

✻ NOTICE

Some cell phones may not support this function.

Menu

Press the [Menu], and select the desired function.

- Connections: The currently connected Bluetooth® device can be changed.
- Information: Detailed information on the currently playing song is displayed.
- Sound settings: Audio sound settings can be changed.

AUX

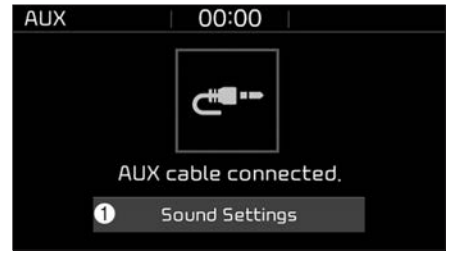

Running AUX

- Press the **[MEDIA]** button, and select [AUX].
- Connect the external device connection jack to the AUX terminal to run AUX.

(1) Sound Settings: Audio sound settings can be changed.

My Music

(1) Repeat

Enable/disable repeat.

(2) Shuffle

Enable/disable shuffle play.

(3) List

View a list of all songs.

(4) Menu

Navigate to the menu screen.

(5) Album Image

View song info.

(6) Pause

Pause or play music.

(7) Playback progress

Press to skip to the desired location.

Playback

Press the **[MEDIA]** button, and select [My Music].

- My Music cannot be selected if it does not contain music.
- Check the content of your USB drive before saving music to My Music.

Changing songs

Press the **[SEEK/TRACK]** button to play the previous or next song.

- Press and hold the **[SEEK/TRACK]** button to rewind or fast forward the currently playing song.
- Search songs by turning the **TUNE** knob and press the knob to play.

Selecting songs from a list

Press the [List] to see a list of songs available for play.

Select and play the desired song.

Repeat play

Press the [Repeat] to enable or disable ‘Repeat all’ or ‘Repeat current song’.

- Repeat all: All songs in the playlist are repeated.
- Repeat current song: The currently playing song is repeated.

Shuffle play

Press the [Shuffle] to enable/disable ‘Shuffle’ play.

- Shuffle: Songs are played in random order.

Menu

Press the [Menu], and select the desired function.

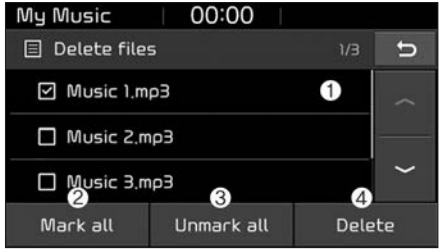

- Delete files: You can delete files from My Music.

(1) File: Select saved file.

(2) Mark all(Mark All): Select all files.

(3) Unmark all(Unmark All): Deselect all files.

(4) Delete: Delete the selected file(s).

- Select the file to delete, then press the [Delete] to delete it.
- Delete is canceled if voice recognition is activated or phone calls are received or made during delete.

- Add to playlist(Add to Playlist): Frequently played songs can be paired in a [Playlist].
  - Songs can be played from the [Playlist].
- Information: Detailed info on the currently playing song is displayed.
- Sound Settings: Audio sound settings can be changed.
- Scan: All songs are played for 10 seconds each.

Delete from playlist(Delete from Playlist)

When a song in the playlist is playing, press the [Menu] and select [Delete from playlist(Delete from Playlist)].

Select the song to delete, then press [Delete].

Phone

✻ NOTICE - Using Bluetooth® (BT) Phone

- **Bluetooth® is a near-field wireless networking technology that uses the 2.4 GHz frequency to connect various devices within a certain distance wirelessly.**
- **The technology is used in PCs, peripherals, Bluetooth® phones, tablet PCs, household appliances and automobiles. Devices supporting Bluetooth® can exchange data at high speeds without physical cable connections.**
- **Bluetooth® Handsfree devices enable convenient access to phone functions through cell phones equipped with Bluetooth®.**
- **Some Bluetooth® devices may not be supported by the Bluetooth® Handsfree function.**

(Continued)

(Continued)

- **When Bluetooth® is connected and calls are attempted through a connected cell phone from outside the vehicle, the call is connected through the Bluetooth® Handsfree function of the vehicle.**
- **Please be sure to disconnect the Bluetooth® Handsfree function through your Bluetooth® device or the audio screen.**

Safety precautions

- The Bluetooth® Handsfree function helps drivers to drive safely. By connecting a Bluetooth®-enabled phone to the vehicle's audio system, phone calls can be made and received through the audio system and contacts can be managed. Consult the user manual before use.
- Excessive manipulation of controls while driving, making it difficult to pay attention to the road ahead, can lead to accidents. Do not operate the device excessively while driving.
- Looking at the screen for a prolonged time increases the risk of accidents. Keep time spent looking at the screen to a minimum.

Precautions when connecting Bluetooth® devices

- The vehicle supports the following Bluetooth® functions. Some Bluetooth® devices may not support some functions.
  1) Bluetooth® Handsfree phone calls
  2) Operations during a call (Private, Switch, Mic Vol.(Out Vol.) controls)
  3) Download call history saved to the Bluetooth® device
  4) Download contacts saved to the Bluetooth® device
  5) Automatic contacts/call history download when Bluetooth® is connected
  6) Automatic Bluetooth® device connection when the vehicle is started
  7) Bluetooth® audio streaming playback
- Before connecting the audio system to your device, make sure your device supports Bluetooth®.
- Even if your device supports Bluetooth®, a Bluetooth® connection cannot be established if the device's Bluetooth® function is switched off. Search and connect with the Bluetooth® function enabled.
- Pair or connect Bluetooth® devices to the audio system with the vehicle at a standstill.
- If a Bluetooth® connection is lost due to abnormal conditions while a Bluetooth® device is connected (communication range exceeded, device power OFF, communication errors, etc.), the disconnected Bluetooth® device is searched for and automatically reconnected.
- If you want to disable the Bluetooth® device auto-connect function, turn the Bluetooth® function OFF on your device. Consult the user manuals for individual devices to see whether Bluetooth® is supported.
- Handsfree call quality and volume may vary depending on the type of Bluetooth® device.
- Some Bluetooth® devices are subject to intermittent Bluetooth® connection failures. In this case, use the following method.
  1) Turn the Bluetooth® function off on your Bluetooth® device ➟ Turn it on and try again.
  2) Delete the paired device from both the audio system and Bluetooth® device, then pair again.
  3) Power down your Bluetooth® device ➟ Turn it on and try again.
  4) Completely remove the battery from your Bluetooth® device; reinsert it, reboot, and attempt connection.
  5) Restart the vehicle and reattempt connection.

Pairing a Bluetooth® device

Information on pairing Bluetooth® devices

- Pairing refers to the process of pairing Bluetooth® cell phones or devices with the system prior to connection. This is a necessary procedure for Bluetooth® connection and usage.
- Up to five devices can be paired.
- Pairing Bluetooth® device is not allowed while vehicle is moving

Pairing the first Bluetooth® device

Select the **[PHONE]** button on the audio system or the **[CALL]** button on the steering wheel remote control ➟ Search for the vehicle from the Bluetooth® device, and pair ➟ Enter the passkey on the Bluetooth® device or approve passkey ➟ Bluetooth® pairing completed

1. When the **[PHONE]** button on the audio or the **[CALL]** button on the steering wheel remote control is pressed, the following screen is displayed. Devices can now be paired.

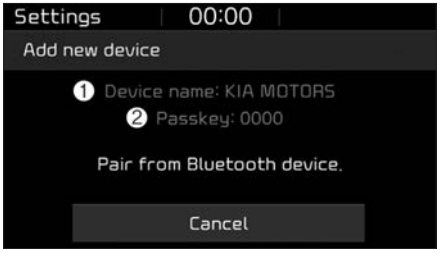

(1) Device name(Vehicle name): Searched name in Bluetooth® device.

(2) Passkey: Passkey for device pairing.

✻ NOTICE

The device name(vehicle name) in the image above is an example. Refer to your device for the actual name of your device.

2. Search for available Bluetooth® devices in the Bluetooth® menu of your Bluetooth® device (cell phone, etc.).
3. Confirm that the device name (vehicle name) in your Bluetooth® device matches the device name (vehicle name) shown on the audio screen, then select it.

4-1. For devices that require passkey entry, a passkey entry screen is shown on your Bluetooth® device.

- Enter the passkey ‘0000’, shown on the audio screen, in your Bluetooth® device.

4-2. For devices that require passkey confirmation, the following screen is shown on the audio system. A 6-digit passkey input screen is shown in the Bluetooth® device.

- After confirming that the 6-digit passkey on the audio screen and the Bluetooth® device are identical, press [OK] in your Bluetooth® device.

✻ NOTICE

The 6-digit passkey in the image above is an example. Refer to your vehicle for the actual passkey

Pairing a second Bluetooth® device

Press the **[SETUP]** button on the audio system ➟ Select [Phone] ➟ Select [Connections] ➟ Select [Add new(Add New)].

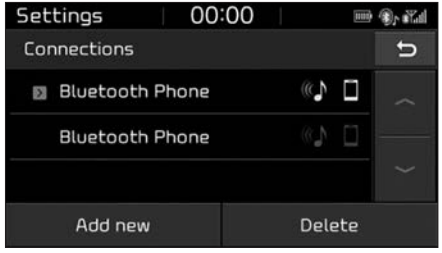

- The pairing procedure from this point is identical to [Pairing the first Bluetooth® device].

✻ NOTICE

- **Bluetooth® standby mode lasts for three minutes. If a device is not paired within three minutes, pairing is canceled. Start over from the beginning.**
- **For most Bluetooth® devices, a connection is established automatically after pairing. Some devices, however, require separate confirmation when connecting after pairing. Be sure to check your Bluetooth® device after pairing to confirm that it has connected.**

Connecting Bluetooth® devices

If there are no connected devices

Select the **[PHONE]** button on the audio system or the **[CALL]** button in the steering wheel remote control ➟ List of paired Bluetooth® devices ➟ Select the desired Bluetooth® device from the list ➟ Connect Bluetooth®.

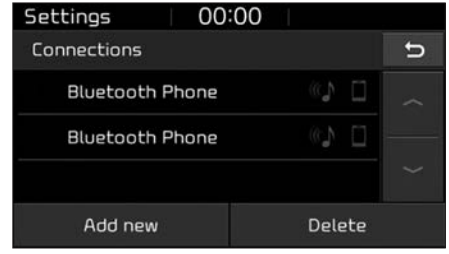

If there are connected devices

Select the **[PHONE]** button on the audio system ➟ Select [Settings] ➟ Select [Connections] ➟ Select Bluetooth® device to connect ➟ Select [Connect] ➟ Connect Bluetooth®.

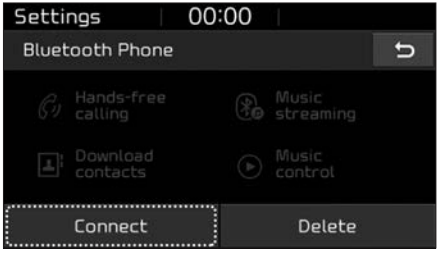

✻ NOTICE

- **Only one Bluetooth® device can be connected at a time.**
- **When a Bluetooth® device is connected, other devices cannot be paired.**

Accepting/rejecting phone calls

Receiving phone calls with Bluetooth® connected.

(1) Caller name: If the caller number is in your contacts, the corresponding name is displayed.

(2) Incoming phone number: Incoming phone number is displayed.

(3) Accept: Accept call.

(4) Reject: Reject call.

✻ NOTICE

- **When the incoming call screen is displayed, audio mode and the settings screen cannot be shown. Only call volume control is supported.**
- **Some Bluetooth® devices may not support the call reject function.**
- **Some Bluetooth® devices may not support the phone number display function.**

Operation during calls

Incoming call with Bluetooth® connected ➞ Select [Accept].

(1) Call duration: Call duration display.

(2) Caller name: If the caller number is in your contacts, the corresponding name is displayed.

(3) Incoming phone number: Incoming phone number is displayed.

(4) Keypad: Number keypad for Automatic Response Service input is displayed.

(5) Private: Call is transferred to a cell phone.

(6) Microphone Volume(Outgoing Volume): Adjust outgoing voice volume.

(7) End: End call.

✻ NOTICE

- **Some Bluetooth® devices may not support the Private function.**
- **The outgoing voice volume may vary depending on the type of Bluetooth® device. If the outgoing voice volume is too high or low, adjust the Microphone Volume (Outgoing Volume).**

Favourites(Favorites)

Select the **[PHONE]** button on the audio system ➞ Select [Favourites (Favorites)] ➞ Favourites(Favorites) list displayed.

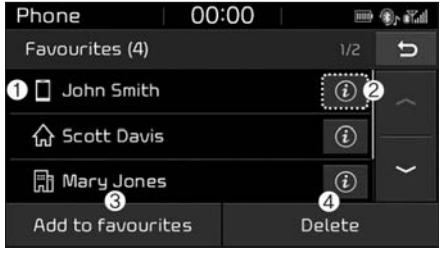

(1) Favourites(Favorites) list: A list of paired favourites(favorites) is displayed.

Connect a call when selected.

(2) Detailed info: Detailed info saved to favourites(favorites) is displayed.

(3) Add to favourites(Favorites): Add a downloaded phone number to favourites(favorites).

(4) Delete: Delete a saved favourites (favorites).

✻ NOTICE

- **Up to 20 favourites(favorites) can be paired for each paired Bluetooth® device.**
- **Favourites(Favorites) can be accessed when the Bluetooth® device they were paired from is connected.**
- **The audio system does not download favourites(favorites) from Bluetooth® devices. Favourites (Favorites) must be newly saved before use.**
- **To add to favourites(favorites), contacts must be downloaded first.**
- **Saved favourites(favorites) are not updated even if the contacts of the connected Bluetooth® device are changed. In this case, favourites (favorites) need to be deleted and added again.**

Call history

Select the **[PHONE]** button on the audio system ➞ Select [Call history] ➞ Call history is displayed.

(1) Call history: Display the downloaded call history list.

Connect a call when selected.

(2) Detailed info: Detailed call history info is displayed.

(3) Sort by: Sort by all calls, dialed calls, received calls or missed calls.

(4) Download: Download call history from connected Bluetooth® devices.

✻ NOTICE

- **Up to 50 dialed, received and missed calls are saved.**
- **When the latest call history is received, the existing call history is deleted.**

Contacts

Select the **[PHONE]** button on the audio system ➟ Select [Contacts] ➟ Select letter (ABC) ➟ Contacts displayed.

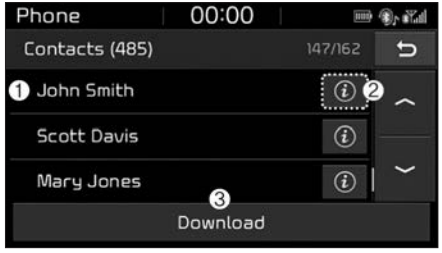

(1) Contacts: Display downloaded contacts.

Connect a call when selected.

(2) Detailed info: Detailed contact info is displayed.

Phone numbers can be saved in favourites(favorites) or removed from the detailed info screen.

(3) Download: Download contacts from connected Bluetooth® devices.

✻ NOTICE

- **Up to 2,000 contacts can be saved.**
- **In some cases, additional confirmation from your Bluetooth® device is necessary when downloading contacts. If downloading of contacts unsuccessful, consult your Bluetooth® device's settings or the audio screen to approve the download.**
- **Contacts without phone numbers are not displayed.**

Dial

Select the **[PHONE]** button on the audio ➟ Select [Dial].

(1) Phone number entry window: The phone number entered using the keypad is displayed.

(2) Clear

- Press to delete individual digits.
- Press and hold to delete the entire phone number.

(3) Keypad: Enter phone number.

(4) Bluetooth® phone name

- The name of the connected Bluetooth® device is displayed.
- Contacts matching the keypad number/letter input are displayed.

(5) Call

- Enter and select a phone number to call.
- Select without entering a phone number to see the most recent dialed call.

Settings

Select the **[PHONE]** button on the audio ➟ Select [Settings].

- For phone settings, refer to Setup page.

Voice Recognition (if epuipped)

✻ NOTICE - Using the Voice Recognition

- **Voice recognition is a safety technology that recognizes user voice commands and executes multimedia functions during driving.**
- **Unfortunately, due to technical limitations, the system is unable to recognize all voice commands. To address these limitations, the voice commands that the system recognizes are displayed on the screen. Use the displayed commands.**
- **Because human speech varies, voice recognition is sometimes unable to properly recognize user voice commands. In these cases, repeat the voice command displayed on the screen, or use the button on the screen to execute the desired function.**

Precautions to ensure smooth voice recognition

- If the language setting is Slovakian, Hungarian or Korean, voice recognition is not supported.
- Voice recognition only supports voice commands indicated on-screen or in the user manual.
- For proper voice recognition, speak after the beep, which sounds after voice notification.
- Voice recognition automatically stops in the following events.
  1) Outgoing and incoming phone calls.
  2) Media (USB, etc.) is connected (voice recognition mode is maintained when iPod®s are connected).
  3) Rear camera is activated (option).
  4) Vehicle is started or engine is turned off.
  5) Screen transition buttons, such as **[RADIO]** or **[MEDIA]**, are selected.
  6) When a pop-up message is displayed on the screen due to accidental execution of the voice recognition function.
- The voice recognition microphone is located above the driver's seat. To ensure proper voice recognition, state voice commands while maintaining proper driving posture.
- Better voice recognition is possible if you speak naturally and clearly, as you would in normal conversation.
- In the following situations, outdoor noise may prevent proper voice recognition.
  1) Wind noise from an open window or sunroof may disrupt voice recognition.
  2) Operating the climate blower at a high level may cause wind noise that disrupts voice recognition. The recommended setting is 3 or below.
  3) When passing through tunnels, vehicle echoes may disrupt voice recognition.
  4) When passing over uneven terrain, vehicle noise may disrupt voice recognition.
  5) Noise from rain in heavy storms may disrupt voice recognition.

Starting/ending voice recognition, and settings

Starting voice recognition

Press the **[VOICE]** button on the steering wheel remote control to start voice recognition and see the voice recognition screen.

Ending voice recognition

- In voice recognition mode, say the command 'Exit' to end voice recognition.
- Press the [Exit] on the bottom left corner of the screen to end voice recognition.
- Press and hold the **[VOICE]** button on the steering wheel remote control to end voice recognition.

Quick-starting voice recognition (manual control)

- Normally, to start voice recognition, you must wait for the voice prompt before saying a command. This involves some waiting time. To run the function immediately to select the commands displayed on the screen.
- This feature is useful if the voice prompt takes too long or the system fails to properly recognize your voice commands.

Skip voice prompt

- While the voice prompt is playing, press the **[VOICE]** button on the steering wheel remote control to skip the voice prompt and place the system in standby for your voice commands.
- This feature is useful if the voice prompt takes too long or you already know the voice command for the desired function.

Extending voice recognition standby time

- After voice recognition is started and the voice prompt and beep sound ('Ding~') are played, the system enters standby for user voice commands for five seconds. During this five-second standby, press the button again to play the beep sound ('Ding~'), and extend voice command standby time by five seconds.
- If you do not say a command for five seconds, you are prompted by voice to repeat your command.

Adjusting voice prompt volume

- While voice recognition is running, turn the **VOL** knob for the audio to adjust voice prompt volume.

✻ NOTICE

The minimum voice prompt volume is 1.

Guide to the voice recognition screen

Voice recognition start screen

(1) Four most frequently used commands: The four most frequently used commands are displayed.

(2) Commands requiring additional settings: Commands that require additional settings before use are displayed.

(3) Voice status icon display.

- Voice recognition standby.
- Voice prompt in progress.
- Processing voice command.

(4) User voice volume: User voice volume is displayed in real time.

(5) Recognition results: Results for voice command input are displayed.

(6) Help: Available voice commands displayed in stages.

(7) Exit: End voice recognition.

Voice recognition Help screen

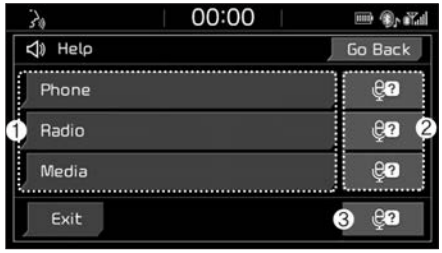

(1) List of voice commands

- Available voice commands are displayed.
- Select or state each command to bring up additional detailed commands.

(2) Voice recognition instructions by item: Voice recognition instructions are displayed by item.

(3) Voice recognition usage instructions: General instructions for use of voice recognition are displayed.

Voice recognition usage instructions screen

(1) Usage instructions display: Detailed instructions on voice instruction usage.

(2) Close: Close the voice recognition usage instructions screen and show the previous screen.

✻ NOTICE

- **Voice recognition is disabled in the voice recognition usage instructions screen. Only manual controls are supported.**
- **The voice recognition usage instructions screen provides a large amount of information. For safety, the screen is disabled while driving.**

List of voice commands

Voice command types

- Voice commands are categorized into 'Global Commands' and 'Local Commands.'

1) Global Commands (●): Commands that can be used immediately after voice recognition is started.

2) Local Commands (O): Commands that can be used when radio, media or Bluetooth® phone functions are running or displayed on the screen after voice recognition is started.

Phone commands

- Voice commands associated with phone functions can be used after a Bluetooth® device has been connected.
- To use voice commands using contact names, such as 'Call John Smith,' download contacts beforehand.
- After contacts are downloaded over Bluetooth®, some time may be required for conversion of contact info into voice data. During this conversion, phone calls cannot be made by saying contact names. The time required for contact info conversion depends on the number of entries in Contacts.
- When the 'Call <Name>' command is used, the name info saved in the downloaded contacts is used. If a friend with the name 'John Smith' is saved to Contacts under the nickname 'Buddy,' 'Call John Smith' is not recognized as a valid command. Instead, 'Call Buddy' is recognized.

	Command	Features
●	Call	Downloaded contacts are shown on-screen. Dial by stating the name of the desired contact.
●	Call history	Recent call history is shown on the screen. State the number of the item on the screen to dial.
●	Redial	Immediately redial the last outgoing phone number in Call History.
●	Call <Name>	Immediately dial the phone number under <Name> in downloaded contacts. E.g. Call <John Smith>
●	Call <Name> on Mobile	Immediately dial the number saved under 'mobile' for <Name> in downloaded contacts. E.g. Call <John Smith> on mobile
●	Call <Name> at Work	Immediately dial the number saved under 'work' for <Name> in downloaded contacts. E.g. Call <John Smith> at work
●	Call <Name> at Home	Immediately dial the number saved under 'home' for <Name> in downloaded contacts. E.g. Call <John Smith> at home
●	Call <Name> on Other	Immediately dial the number saved under 'other' and not 'cell, home, or work' for <Name> in downloaded contacts. E.g. Call <John Smith> on other
●	Dial Number	Display a screen enabling you to say a phone number to dial.

✻ NOTICE

When dialing by name, if there are similar names or multiple subentries (mobile, work, home, other), you may be prompted to select the contact desired from a list.

Radio voice commands

	Command	Features
●	FM	Start FM radio.
●	AM	Start AM radio.
●	DAB	Start DAB* radio.
●	Radio	Start the radio in FM, AM or DAB* mode, depending on what mode was used last.
●	Traffic Announcement On	Turn traffic announcement on.
●	Traffic Announcement Off	Turn traffic announcement off.
O	Station List	Show a radio station list.
O	Preset <1–40>	Run the saved preset 1–40.

(* if equipped)

Media commands

If no media type is connected or there are no files available for playback, a voice prompt to that effect is played.

- If the name of the media currently playing is stated, the current status of operation is maintained.

  E.g. Say ‘USB’ during USB playback.
- External (AUX) devices do not support play, pause, shuffle and repeat voice commands.

	Command	Features
●	USB	• Play music files on the currently connected USB drive. • Play iPod® music instead of USB if an iPod® is connected.
●	My Music	Play My Music files saved internally on the system.
●	iPod®	• Play music files on the currently connected iPod®. • Play USB drive music instead of iPod® if a USB drive is connected. • Operate in the same manner when an iPhone® is connected.
●	Bluetooth® Audio	Play music files on the currently connected Bluetooth® device.
●	AUX	Play music on the currently connected external device.
●	Media	Play the last played music media.

USB, iPod®, My Music commands

Command		Features
O	Play	• Resume playback of a paused file. • If playback is in progress, current status is maintained.
O	Pause	• Pause the currently playing file. • If already paused, current status is maintained.
O	Shuffle	• Play all files in random order. • If already in Shuffle Play mode, current status is maintained.
O	Shuffle Off	• If currently in Shuffle Play mode, it is canceled and tracks are played in order. • If Shuffle Play mode has already been disabled, current status is maintained.
O	Repeat	• Repeat playback of the current file. • If already in repeat playback mode, current status is maintained.
O	Repeat Off	• If in repeat playback mode, repeat is canceled. • If repeat playback mode has already been disabled, current status is maintained.

Bluetooth® Audio commands

Command		Features
O	Play	• Resume playback of a paused file. • If playback is in progress, current status is maintained.
O	Pause	• Pause the currently playing file. • If already paused, current status is maintained.

✻ NOTICE

Some Bluetooth® devices may not support the play/pause features.

Miscellaneous commands

	Command	Features
●	Help	Show the voice recognition Help screen, view and execute available commands.
O	Line 1-3	• As with the Call History list, if a particular name cannot be selected, its index number in the list can be used instead. • ‘First,’ ‘Second’ and other ordinal numbers are recognized.
O	Yes/No	Used to answer questions asked by the system during voice recognition.
O	Previous/Next	If more than four search results are returned, these voice commands can be used to navigate to the previous or next page.

Setup

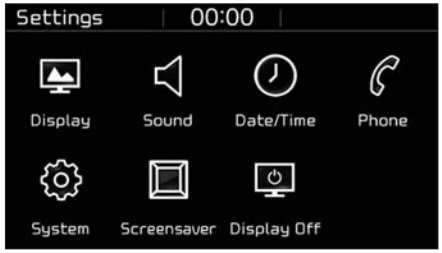

Access Display, Sound, Date/Time, Phone, System, Screensaver (Screen Saver) and Display Off settings.

Select the **[SETUP]** button on the audio system.

Display

Select the **[SETUP]** button on the audio system ➟ Select [Display].

- Dimming mode(Dimming Mode): Audio screen brightness can be adjusted to the time of day.
- Brightness(Illumination): The brightness of the audio screen can be changed.

Sound

Select the **[SETUP]** button on the audio system ➟ Select [Sound].

- Position: Sound balance and panning can be adjusted.
- Equaliser(Tone): Sound tone color can be adjusted.
- Speed dependent volume control(Speed Dependent Volume): Automatically adjust volume based on vehicle speed.
- Beep: Select whether to play a beep sound when the screen is touched.

Date/Time

Select the **[SETUP]** button on the audio system ➟ Select [Date/Time].

- Set time: Set the time displayed on the audio screen.
- Time format(Time Format): Choose between 12-hour and 24-hour time formats.
- Set date(Set Date): Set the date displayed on the audio screen.

Phone

Select the **[SETUP]** button on the audio system ➞ Select [Phone].

- Connections: Control pairing, deletion, connection and disconnection of Bluetooth® devices.
- Auto connection priority(Auto Connection Priority): Set the connection priority of Bluetooth® devices when the vehicle is started.
- Update contacts(Download Contacts): Contacts can be downloaded from connected Bluetooth® devices.
- Bluetooth® voice guidance(Bluetooth® Voice Prompts): Play or mute voice prompts for Bluetooth® device pairing, connection and errors.

✻ NOTICE

- **When paired devices are deleted, the call history and contacts of the device saved to the audio system are deleted.**
- **For Bluetooth® connections with low connection priority, some time may be required for the connection to be established.**
- **Contacts can be downloaded only from the currently connected Bluetooth® device.**
- **If no Bluetooth® device is connected, the Download Contacts button is disabled.**
- **If the language setting is English, Bluetooth® voice prompts are not supported.**
- **If the language setting is Slovakian, Hungarian or Korean, Bluetooth® voice guidance is not supported.**

System

Select the **[SETUP]** button on the audio system ➞ Select [System].

- Memory information (Memory Information): View My Music memory usage.
- Voice recognition guidance(Voice Recognition Guidance): Adjust the length of the voice recognition prompt.
- Language: Change the user language.
- Default: Reset the audio system.

✻ NOTICE

The system resets to the default values, and all saved data and settings are lost.

Screensaver(Screen Saver)

Set the information displayed when the audio system is switched off or the screen is turned off.

Select the **[SETUP]** button on the audio system ➟ Select [Screensaver (Screen Saver)].

- Analogue(Analog): An analog clock is displayed.
- Digital: A digital clock is displayed.
- None: No information is displayed.

Display Off

To prevent glare, the screen can be turned off with the audio system in operation.

Select the **[SETUP]** button on the audio system ➟ Select [Display Off].

✻ NOTICE

Use 'Screensaver(Screen Saver)' to set the information to be displayed when the screen is turned off.

Declaration of Conformity

CE for EU

Declaration of Conformity

We, manufacturer, hereby declare that the product

Model	ACBC0G5EE (Alt. : ACB10G5GG, ACB10G5GN, ACB10G5GE, ACB90G5GG, ACB11G5GG, ACB90G5EE, ACB11G5GN, ACB11G5GE, ACB93G5GG)
Type	DIGITAL CAR AUDIO SYSTEM

satisfies all the technical regulations applicable to the product within the scope of Council Directives 2006/95/EC, 2004/108/EC and 99/5/EC:

Radio	ETSI EN 300 328 V1.9.1
EMC	ETSI EN 301 489-1 V1.9.2:2011, ETSI EN 301 489-17 V2.2.1:2012 EN 55013:2001/A1:2003/A2:2006, EN 55020:2007/A11:2011
Safety	EN 60065:2002/A1:2006/A11:2008/A2:2010/A12:2011

All essential radio test suites have been carried out.

Testing laboratory: SGS Korea Co., Ltd.

4, LS-ro, 182 beon-gil, Gunpo-si, Gyeonggi-do, 435-040, Korea

Tel. 82-31-428-5700 / Fax 82-31-427-2371

Authorized representative or manufacturer:

Hyundai MOBIS Co., Ltd.

203, Teheran-ro, Gangnam-gu, Seoul, 135-977, Korea

Tel. 82-31-260-2707 / Fax. 82-31-899-1788

This declaration is issued under the sole responsibility of the manufacturer and, if applicable, his authorized Representative, and is marked in accordance with the CE marking directive 93/68/EEC.

Point of contact:

Hyundai MOBIS Co., Ltd. Tel. 82-31-260-2707 / Fax. 82-31-899-1788

Seoul, Korea / 2 December 2015

CE

Seung-Hoon Choe
Senior Researcher

NCC for Taiwan

根據NCC低功率電波輻射性電機管理辦法規定:	
第十二條	經型式認證合格之低功率射頻電機，非經許可，公司、商號或使用者均不得擅自變更頻率、加大功率或變更原設計之特性及功能。
第十四條	低功率射頻電機之使用不得影響飛航安全及干擾合法通信；經發現有干擾現象時，應立即停用，並改善至無干擾時方得繼續使用。 前項合法通信，指依電信法規定作業之無線電通信。 低功率射頻電機須忍受合法通信或工業、科學及醫療用電波輻射性電機設備之干擾。

TRA for OMAN

OMAN-TRA R/2998/16 D080134	**OMAN-TRA** R/3002/16 D080134
OMAN-TRA R/3001/16 D080134	**OMAN-TRA** R/3008/16 D080134

Driving your vehicle

Before driving 6-4
- Before entering vehicle 6-4
- Necessary inspections 6-4
- Before starting 6-4

Key positions 6-6
- Illuminated ignition switch 6-6
- Ignition switch position 6-6
- Starting the hybrid system 6-8

Engine start/stop button 6-9
- Illuminated engine start/stop button 6-9
- Engine start/stop button position 6-9
- Starting the hybrid system 6-12

Dual Clutch Transmission (DCT) 6-15
- Dual clutch transmission operation 6-15
- Good driving practices 6-22

Brake system 6-24
- Power brakes 6-24
- Foot parking brake 6-25
- Anti-lock brake system (ABS) 6-27
- Electronic stability control (ESC) 6-30
- Vehicle stability management (VSM) 6-34
- Hill-start assist control (HAC) 6-35
- Emergency Stop Signal (ESS) 6-36
- Good braking practices 6-36

Assist emergency braking (AEB) 6-38
- System setting and activation 6-38
- AEB warning message and system control 6-40
- Brake operation 6-42
- Sensor to detect the distance from the vehicle in front (front radar) 6-42
- System malfunction 6-43
- Limitation of the system 6-45
- Recognizing pedestrians 6-48

Cruise Control system 6-49
- Cruise control switch 6-50
- To set cruise control speed: 6-50
- To increase cruise control set speed: 6-51
- To decrease the cruising speed: 6-51
- To temporarily accelerate with the cruise control on: . . 6-52
- To cancel cruise control, do one of the following: . . 6-52
- To resume cruising speed at more than approximately 30 km/h (20 mph) 6-53
- To turn cruise control off, do one of the following: . . 6-53

Smart cruise control system 6-54
- Speed setting 6-55
- Vehicle to vehicle distance setting 6-60
- To adjust the sensitivity of smart cruise control . . . 6-63
- To convert to cruise control mode: 6-64
- Limitations of the system 6-64

Speed limit control system. 6-70
• To set speed limit :. 6-70
• To turn off the speed limit control, do one of the following: 6-72
Lane Keeping Assist System (LKAS). 6-73
• LKAS operation 6-74
• LKAS malfunction 6-79
• LKAS function change 6-80
Blind spot detection system. 6-81
• Blind spot detection / Lane change assist 6-82
• Rear cross traffic alert 6-84
• Driver's Attention 6-87
Economical operation 6-88
Special driving conditions 6-90
• Hazardous driving conditions 6-90
• Reducing the risk of a rollover 6-90
• Rocking the vehicle 6-91
• Smooth cornering 6-92
• Driving at night 6-93
• Driving in the rain 6-93
• Driving in flooded areas 6-93
• Driving off-road. 6-93
• Highway driving 6-94
Winter driving 6-95
• Snowy or Icy conditions 6-95
• Use high quality ethylene glycol coolant. 6-97
• Check battery and cables 6-97
• Change to "winter weight" oil if necessary 6-97
• Check spark plugs and ignition system. 6-97
• To keep locks from freezing 6-98
• Use approved window washer anti-freeze in system . . 6-98
• Don't let your parking brake freeze 6-98
• Don't let ice and snow accumulate underneath 6-98
• Carry emergency equipment 6-98
Trailer Towing 6-99
• Hitches 6-101
• Safety chains 6-101
• Trailer brakes 6-102
• Driving with a trailer 6-102
• Maintenance when trailer towing 6-106
• If you do decide to pull a trailer 6-107
Vehicle weight 6-110
• Base curb weight 6-110
• Vehicle curb weight 6-110
• Cargo weight 6-110
• GAW (Gross axle weight) 6-110
• GAWR (Gross axle weight rating). 6-110
• GVW (Gross vehicle weight) 6-110
• GVWR (Gross vehicle weight rating) 6-110
• Overloading 6-110

⚠ WARNING - ENGINE EXHAUST CAN BE DANGEROUS!

Engine exhaust fumes can be extremely dangerous. If, at any time, you smell exhaust fumes inside the vehicle, open the windows immediately.

- **Do not inhale exhaust fumes.**

  Exhaust fumes contain carbon monoxide, a colorless, odorless gas that can cause unconsciousness and death by asphyxiation.

- **Be sure the exhaust system does not leak.**

  The exhaust system should be checked whenever the vehicle is raised to change the oil or for any other purpose. If you hear a change in the sound of the exhaust or if you drive over something that strikes the underneath side of the vehicle, we recommend that the system be checked by an authorized Kia dealer.

- **Do not run the engine in an enclosed area.**

  Letting the engine idle in your garage, even with the garage door open, is a hazardous practice. Never run the engine in your garage any longer than it takes to start the engine and back the vehicle out.

- **Avoid idling the engine for prolonged periods with people inside the vehicle.**

  If it is necessary to idle the engine for a prolonged period with people inside the vehicle, be sure to do so only in an open area with the air intake set at "Fresh" and fan operating at one of the higher speeds so fresh air is drawn into the interior.

If you must drive with the tailgate open because you are carrying objects that make this necessary:

1. Close all windows.
2. Open side vents.
3. Set the air intake control at "Fresh", the air flow control at "Floor" or "Face" and the fan at one of the higher speeds.

To assure proper operation of the ventilation system, be sure the ventilation air intakes located just in front of the windshield are kept clear of snow, ice, leaves or other obstructions.

BEFORE DRIVING

Before entering vehicle

- Be sure that all windows, outside mirror(s), and outside lights are clean.
- Check the condition of the tires.
- Check under the vehicle for any sign of leaks.
- Be sure there are no obstacles behind you if you intend to back up.

Necessary inspections

Fluid levels, such as engine oil, engine coolant, brake fluid, and washer fluid should be checked on a regular basis, with the exact interval depending on the fluid. Further details are provided in chapter 8, “Maintenance”.

⚠ WARNING

Driving while distracted can result in a loss of vehicle control, that may lead to an accident, severe personal injury, and death. The driver’s primary responsibility is in the safe and legal operation of a vehicle, and use of any handheld devices, other equipment, or vehicle systems which take the driver’s eyes, attention and focus away from the safe operation of a vehicle or which are not permissible by law should never be used during operation of the vehicle.

Before starting

- Close and lock all doors.
- Position the seat so that all controls are easily reached.
- Adjust the inside and outside rearview mirrors.
- Be sure that all lights work.
- Check all gauges.
- Check the operation of warning lights when the ignition switch is turned to the ON position.
- Release the parking brake and make sure the brake warning light goes out.

For safe operation, be sure you are familiar with your vehicle and its equipment.

⚠ WARNING

All passengers must be properly belted whenever the vehicle is moving. Refer to “Seat belts” in chapter 3 for more information on their proper use.

⚠ WARNING

Always check the surrounding areas near your vehicle for people, especially children, before putting a vehicle into “D (Drive)” or “R (Reverse)”.

⚠ WARNING - Driving under the influence of alcohol or drugs

Drinking and driving is dangerous. Drunk driving is the number one contributor to the highway death toll each year. Even a small amount of alcohol will affect your reflexes, perceptions and judgement. Driving while under the influence of drugs is as dangerous or more dangerous than driving drunk.

You are much more likely to have a serious accident if you drink or take drugs and drive.

If you are drinking or taking drugs, don’t drive. Do not ride with a driver who has been drinking or taking drugs. Choose a designated driver or call a cab.

⚠ WARNING

- **When you intend to park or stop the vehicle with the engine on, be careful not to depress the accelerator pedal for a long period of time. It may overheat the engine or exhaust system and cause fire.**
- **When you make a sudden stop or turn the steering wheel rapidly, loose objects may drop on the floor and it could interfere with the operation of the foot pedals, possibly causing an accident. Keep all things in the vehicle safely stored.**
- **If you do not focus on driving, it may cause an accident. Be careful when operating what may disturb driving such as audio or heater. It is the responsibility of the driver to always drive safely.**

KEY POSITIONS

Illuminated ignition switch (If equipped)

OQLE055065

Whenever a front door is opened, the ignition switch will be illuminated for your convenience, provided the ignition switch is not in the ON position. The light will go off immediately when the ignition switch is turned on or go off after about 30 seconds when the door is closed.

Ignition switch position

LOCK

OQLE055066

The steering wheel locks to protect against theft. The ignition key can be removed only in the LOCK position.

ACC (Accessory)

The steering wheel is unlocked and electrical accessories are operative.

✻ NOTICE

If difficulty is experienced turning the ignition switch to the ACC position, turn the key while turning the steering wheel right and left to release the tension.

ON

The warning lights can be checked before the engine is started. This is the normal running position after the engine is started.

Do not leave the ignition switch ON if the engine is not running to prevent battery discharge.

START

Turn the ignition key to the START position to start the engine. The engine will crank until you release the key; then it returns to the ON position. The brake warning lamp can be checked in this position.

⚠ WARNING - Ignition key

- **Never turn the ignition switch to LOCK or ACC while the vehicle is moving. This would result in loss of directional control and braking function, which could cause an accident.**
- **The anti-theft steering column lock (if equipped) is not a substitute for the parking brake. Before leaving the driver's seat, always make sure the shift lever is engaged in P (Park) for the dual clutch transaxle, set the parking brake fully and shut the engine off. Unexpected and sudden vehicle movement may occur if these precautions are not taken.**

(Continued)

(Continued)

- **Never reach for the ignition switch, or any other controls through the steering wheel while the vehicle is in motion. The presence of your hand or arm in this area could cause a loss of vehicle control, an accident and serious bodily injury or death.**
- **Do not place any movable objects around the driver's seat as they may move while driving, interfere with the driver and lead to an accident.**

Starting the hybrid system

⚠ WARNING

- **Always wear appropriate shoes when operating your vehicle. Unsuitable shoes, such as high heels, ski boots, sandals, flip-flops, etc., may interfere with your ability to use the brake and accelerator pedals.**
- **Do not start the vehicle with the accelerator pedal depressed.**

  The vehicle can move and lead to an accident.

✻ NOTICE

The hybrid system will start by turning the ignition switch to START.

1. Make sure the parking brake is applied.
2. Make sure the shift lever is in P (Park).
3. Depress the brake pedal.
4. Turn the ignition switch to START. If the hybrid system starts, the " " indicator will come on.

✻ NOTICE

- **Do not wait for the engine to warm up while the vehicle remains stationary.**
  Start driving at moderate engine speeds. (Steep accelerating and decelerating should be avoided.)
- **Always start the vehicle with your foot on the brake pedal. Do not depress the accelerator while starting the vehicle. Do not race the engine while warming it up.**
- **If ambient temperature is low, the " " indicator may remain illuminated longer than the normal amount of time.**

✻ NOTICE

To prevent damage to the vehicle:

- **If the " " indicator turns off while you are in motion, do not attempt to move the shift lever to the P (Park) position.**
  If traffic and road conditions permit, you may put the shift lever in the N (Neutral) position while the vehicle is still moving and turn the ignition switch to START. In an attempt to restart the hybrid system.
- **Do not push or tow your vehicle to start the hybrid system.**

ENGINE START/STOP BUTTON

Illuminated engine start/stop button

ODE056004

Whenever the front door is opened, the engine start/stop button will illuminate for your convenience. The light will go off after about 30 seconds when the door is closed. It will also go off immediately when the engine start/stop button is ON position.

Engine start/stop button position

OFF

Not illuminated

To turn off the engine (START/RUN position) or vehicle power (ON position), press the engine start/stop button with the shift lever in the P (Park) position. When you press the engine start/stop button without the shift lever in the P (Park) position, the engine start/stop button will not change to the OFF position but to the ACC position.

Vehicles equipped with anti-theft steering column lock

The steering wheel locks when the engine start/stop button is in the OFF position to protect you against theft.

It locks when the door is opened.

If the steering wheel is not locked properly when you open the driver's door, the warning chime will sound. Try locking the steering wheel again. If the problem is not solved, we recommend that the system be checked by an authorized Kia dealer.

In addition, if the engine start/stop button is in the OFF position after the driver's door is opened, the steering wheel will not lock and the warning chime will sound. In such a situation, close the door. Then the steering wheel will lock and the warning chime will stop.

✻ NOTICE

If the steering wheel doesn't unlock properly, the engine start/stop button will not work. Press the engine start/stop button while turning the steering wheel right and left to release the tension.

⚠ CAUTION

You are able to turn off the engine (START/RUN) or vehicle power (ON), only when the vehicle is not in motion. In an emergency situation while the vehicle is in motion, you are able to turn the engine off and to the ACC position by pressing the engine start/stop button for more than 2 seconds or 3 times successively within 3 seconds. If the vehicle is still moving, you can restart the engine without depressing the brake pedal by pressing the engine start/stop button with the shift lever in the N (Neutral) position.

ACC (Accessory)

Amber

Press the engine start/stop button while it is in the OFF position without depressing the brake pedal.

The steering wheel unlocks (if equipped with anti-theft steering column lock) and electrical accessories are operational.

If the engine start/stop button is in the ACC position for more than 1 hour, the button is turned off automatically to prevent battery discharge.

ON

Redish orange

Press the engine start/stop button while it is in the ACC position without depressing the brake pedal.

The warning lights can be checked before the engine is started. Do not leave the engine start/stop button in the ON position for a long time. The battery may discharge, because the engine is not running.

START/RUN

Not illuminated

To start the engine, depress the brake pedal and press the engine start/stop button with the shift lever in the P (Park) or the N (Neutral) position. For your safety, start the engine with the shift lever in the P (Park) position.

✻ NOTICE

If you press the engine start/stop button without depressing the brake pedal for dual clutch transaxle vehicles, the engine will not start and the engine start/stop button changes as follow:
OFF ➔ACC ➔ ON ➔ OFF or ACC

✻ NOTICE

If you leave the engine start/stop button in the ACC or ON position for a long time, the battery will discharge.

⚠ WARNING

- **Never press the engine start/stop button while the vehicle is in motion. This would result in loss of directional control and braking function, which could cause an accident.**
- **The anti-theft steering column lock (if equipped) is not a substitute for the parking brake. Before leaving the driver's seat, always make sure the shift lever is engaged in P (Park), set the parking brake fully and shut the engine off. Unexpected and sudden vehicle movement may occur if these precautions are not taken.**

(Continued)

(Continued)

- **Never reach for the engine start/ stop button or any other controls through the steering wheel while the vehicle is in motion. The presence of your hand or arm in the area could cause loss of vehicle control, an accident and serious bodily injury or death.**
- **Do not place any movable objects around the driver's seat as they may move while driving, interfere with the driver and lead to an accident.**

Starting the hybrid system

⚠ WARNING

- **Always wear appropriate shoes when operating your vehicle. Unsuitable shoes, such as high heels, ski boots, sandals, flip-flops, etc., may interfere with your ability to use the brake and accelerator pedals.**
- **Do not start the vehicle with the accelerator pedal depressed.**

  The vehicle can move and lead to an accident.

✻ NOTICE

- **The hybrid system will start by pressing the Engine Start/Stop button, only when the smart key is in the vehicle.**
- **Even when the smart key is in the vehicle, and when it is far away from the driver, the hybrid system may not start.**
- **When the Engine Start/Stop button is in the ACC or ON position, any door is open, the system checks for the smart key. When the smart key is not in the vehicle, the "🚗" indicator will blink and the warning "Key not in vehicle" will come on. When all doors are closed, the chime will also sound for about 5 seconds. Keep the smart key in the vehicle when in the ACC position or if the hybrid system is ON.**

1. Always carry the smart key with you.
2. Make sure the parking brake is applied.
3. Make sure the shift lever is in P (Park).
4. Depress the brake pedal.
5. Press the Engine Start/Stop button. If the hybrid system starts, the " " indicator will come on.

✻ NOTICE

- **Do not wait for the engine to warm up while the vehicle remains stationary.**
  Start driving at moderate engine speeds. (Steep accelerating and decelerating should be avoided.)
- **Always start the vehicle with your foot on the brake pedal. Do not depress the accelerator while starting the vehicle. Do not race the engine while warming it up.**
- **If ambient temperature is low, the " " indicator may remain illuminated longer than the normal amount of time.**

✻ NOTICE

To prevent damage to the vehicle:

- **If the " " indicator turns off while you are in motion, do not attempt to move the shift lever to the P (Park) position.**
  If traffic and road conditions permit, you may put the shift lever in the N (Neutral) position while the vehicle is still moving and press the Engine Start/Stop button in an attempt to restart the hybrid system.
- **Do not push or tow your vehicle to start the hybrid system.**

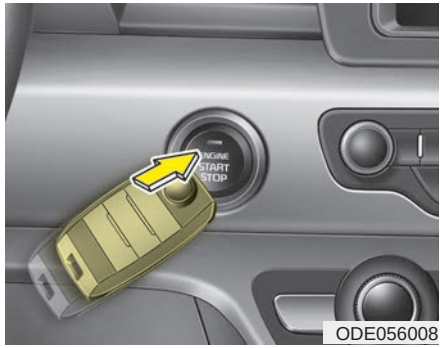

ODE056008

✻ NOTICE

- **If the battery is weak or the smart key does not work correctly, you can start the engine by pressing the engine start/stop button with the smart key.**
  The side with the lock button should be contacted directly.
  When you press the engine start/stop button directly with the smart key, the smart key should contact the button at a right angle.

(Continued)

(Continued)

- **When the stop lamp fuse is blown, you cannot start the engine normally.**
  Replace the fuse with a new one. If it is not possible, you can start the engine by pressing the engine start/stop button for 10 seconds while it is in the ACC position. The engine can start without depressing the brake pedal. But for your safety always depress the brake pedal before starting the engine.

⚠ CAUTION

Do not press the engine start/stop button for more than 10 seconds except when the stop lamp fuse is blown.

DUAL CLUTCH TRANSMISSION (DCT)

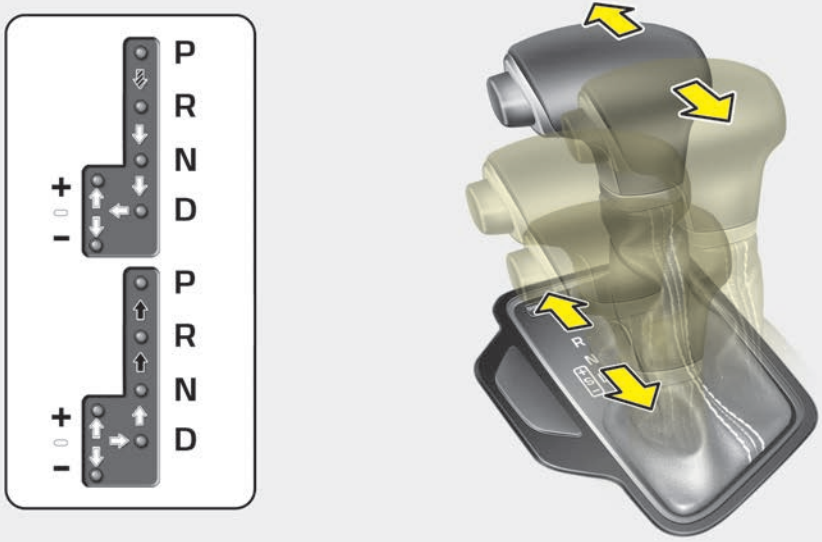

Depress the brake pedal and the lock release button when shifting.

Press the lock release button when shifting.

The shift lever can be shifted freely.

ODE056010

Dual clutch transmission operation

The dual clutch transmission has six forward speeds and one reverse speed.

The individual speeds are selected automatically in the D (Drive) position.

⚠ WARNING

To reduce the risk of serious injury or death:

- **ALWAYS check the surrounding areas near your vehicle for people, especially children, before shifting a vehicle into D (Drive) or R (Reverse).**
- **Before leaving the driver's seat, always make sure the shift lever is in the P (Park) position, then set the parking brake, and place the ignition switch in the LOCK/OFF position. Unexpected and sudden vehicle movement can occur if these precautions are not followed.**
- **Do not use engine braking (shifting from a high gear to lower gear) rapidly on slippery roads. The vehicle may slip causing an accident.**

- The Dual Clutch Transmission gives the driving feel of a manual transmission, yet provides the ease of a fully automatic transmission. Unlike a traditional automatic transmission, the gear shifting can be felt (and heard) on the dual clutch transmission
  - Think of it as an automatically shifting manual transmission.
  - Shift into Drive range and get fully automatic shifting, similar to a conventional automatic transmission.
- Dual clutch transmission adopts dry-type dual clutch, which is different from torque converter of automatic transmission, and shows better acceleration performance during driving. But, initial launch might be little bit slower than Automatic Transmission.
- The dry-type clutch transfers torque and provides a direct driving feeling which may feel different from a conventional automatic transmission with a torque converter. This may be more noticeable when starting from a stop or low vehicle speed.
- When rapidly accelerating at low vehicle speed, engine could rev at high rpm depending on vehicle drive condition.
- For smooth launch uphill, press down the accelerator pedal smoothly depending on the current conditions.
- If you release your foot from the accelerator pedal at low vehicle speed, you may feel strong engine brake, which is similar to manual transmission.
- When driving downhill, you may use Sports Mode to downshift to a lower gear in order to control your speed without using the brake pedal excessively.
- When you turn the engine on and off, you may hear clicking sounds as the system goes through a self test. This is a normal sound for the Dual Clutch Transmission.

⚠ **CAUTION**

- *To hold the vehicle on a hill use the foot brake or the parking brake. If the vehicle is held by applying the accelerator pedal on a hill the clutch and transmission will be overheated resulting in damage.*

  At this time, a warning message ("Steep grade! Press brake pedal") will appear on the LCD display and you may feel a vibration.
- *If the clutch becomes overheated by excessive use of the clutch to hold on a hill, you may notice a shudder feeling and a blinking display on the instrument cluster. When this occurs, the clutch is disabled until the clutch cools to normal temperatures. If this occurs, pull over to a safe location, shift into P (Park) and apply the foot brake for a certain time on the LCD warning until it disappears.*

(Continued)

(Continued)

- *If the LCD warning is active, the foot brake must be applied.*
- *Ignoring the warnings can lead to damage to the transmission.*
- *If the display continues to blink, for your safety, we recommend that you contact an authorized Kia dealer.*
- *Under certain conditions such as repeated launch on steep grades, the clutch in the transmission could overheat.*

  When the clutch is overheated, the safe protection mode engages. If the safe protection mode engages, the gear position indicator on the cluster blinks with a chime sound.

(Continued)

(Continued)

At this time, a warning message ("Transmission temp. is high! Stop safely", "Trans Cooling. Remain parked for 00 min.", "Trans Cooled. Resume driving") will appear on the LCD display and driving may not be smooth.

If you ignore this warning, the driving condition may become worse. To return the normal driving condition, stop the vehicle and apply the foot brake for a few minutes before driving off.

- *Gear shifts may be more noticeable than a conventional automatic transmission. This is a normal characteristic of this type of dual clutch transmission.*

(Continued)

(Continued)

- *The overheated Dual clutch transmission may change the gear shifting characteristics, and illuminate the warning message on the LCD display under the conditions that operation of the kickdown mechanism is repetitively used.*
- *Do not use the kickdown mechanism to return to the normal driving condition. Also, temporarily stop the vehicle at a safe location, when the warning message illuminates on the LCD display.*
- *During the first 1,500 km (1,000 miles), you may feel that the vehicle may not be smooth when accelerating at low speed. During this break-in period, the shift quality and performance of your new vehicle is continuously optimized.*

(Continued)

(Continued)

- *Always come to a complete stop before shifting into D (Drive) or R (Reverse).*
- *Do not put the shift lever in N (Neutral) while driving.*

The indicator in the instrument cluster displays the shift lever position when the ignition switch is in the ON position.

P (Park)

Always come to a complete stop before shifting into P (Park).

To shift from P (Park), you must depress firmly on the brake pedal and make sure your foot is off the accelerator pedal.

The shift lever must be in P (Park) before turning the engine off.

⚠ WARNING

- **Shifting into P (Park) while the vehicle is in motion may cause you to lose control of the vehicle.**
- **After the vehicle has stopped, always make sure the shift lever is in P (Park), apply the parking brake, and turn the engine off.**
- **Do not use the P (Park) position in place of the parking brake.**

R (Reverse)

Use this position to drive the vehicle backward.

⚠ CAUTION

Always come to a complete stop before shifting into or out of R (Reverse); you may damage the transmission if you shift into R (Reverse) while the vehicle is in motion.

N (Neutral)

The wheels and transmission are not engaged.

Use N (Neutral) if you need to restart a stalled engine, or if it is necessary to stop with the engine ON. Shift into P (Park) if you need to leave your vehicle for any reason.

Always depress the brake pedal when you are shifting from N (Neutral) to another gear.

⚠ WARNING

Do not shift into gear unless your foot is firmly on the brake pedal. Shifting into gear when the engine is running at high speed can cause the vehicle to move very rapidly. You could lose control of the vehicle and hit people or objects.

⚠ WARNING

Do not drive with the shift lever in N (Neutral).

The engine brake will not work and lead to an accident.

- Parking in N (Neutral) gear

Follow below steps when parking and you want the vehicle to move when pushed.

1. After parking your vehicle, step on the brake pedal and move the shift lever to P with the ignition button in ON or while the engine is running.
2. If the parking brake is applied unlock the parking brake.
3. While pressing the brake pedal, turn the ignition button OFF.
   - For smart key equipped vehicles, the ignition switch can be moved to OFF only when the shift lever is in P.
4. Change the gear shift lever to N (Neutral) while pressing the brake pedal and pushing [SHIFT LOCK RELEASE] button or inserting, pressing down a tool (e.g. flathead screw-driver) into the [SHIFT LOCK RELEASE] access hole at the same time. Then, the vehicle will move when external force is applied.

⚠ CAUTION

- ***With the exception of parking in neutral gear, always park the vehicle in P (Park) for safety and engage the parking brake.***
- ***Before parking in N (Neutral) gear, first make sure the parking ground is level and flat. Do not park in N gear on any slopes or gradients.***

  If parked and left in N, the vehicle may move and cause serious damage and injury.

D (Drive)

This is the normal driving position. The transmission will automatically shift through a six-gear sequence, providing the best fuel economy and power.

For extra power when passing another vehicle or driving uphill depress the accelerator pedal further until you feel the transmission downshift to a lower gear.

Manual mode

Whether the vehicle is stationary or in motion, manual mode is selected by pushing the shift lever from the D (Drive) position into the manual gate. To return to D (Drive) range operation, push the shift lever back into the main gate.

In manual mode, moving the shift lever backwards and forwards will allow you to select the desired range of gears for the current driving conditions.

+ (Up) : Push the lever forward once to shift up one gear.

- (Down) : Pull the lever backwards once to shift down one gear.

✻ NOTICE

- **Only the six forward gears can be selected. To reverse or park the vehicle, move the shift lever to the R (Reverse) or P (Park) position as required.**
- **Downshifts are made automatically when the vehicle slows down. When the vehicle stops, 1st gear is automatically selected.**
- **When the engine rpm approaches the red zone the transmission will upshift automatically.**
- **If the driver presses the lever to + (Up) or - (Down) position, the transmission may not make the requested gear change if the next gear is outside of the allowable rpm range.**

SPORT Mode / ECO Mode

When you drive after changing the gear shift lever to manual mode, the vehicle will automatically shift to SPORT mode. When you drive the vehicle after putting the gear shift lever to 'D', the vehicle will automatically shift to ECO mode. Each automatic change in shift will be displayed on the instrument cluster.

- ECO mode

This driving mode increases fuel efficiency. The actual fuel mileage will depend on your driving habits and road conditions.

- SPORT mode

This driving mode provides sporty driving experience. Be aware that fuel efficiency may decrease in this mode.

Shift lock system

For your safety, the Dual clutch transmission has a shift lock system which prevents shifting the transaxle from P (Park) into R (Reverse) unless the brake pedal is depressed.

To shift the transaxle from P (Park) into R (Reverse):

1. Depress and hold the brake pedal.
2. Start the engine or turn the ignition switch to the ON position.
3. Move the shift lever.

If the brake pedal is repeatedly depressed and released with the shift lever in the P (Park) position, a chattering noise & vibration near the shift lever may be heard. This is a normal condition.

⚠ WARNING

Always fully depress the brake pedal before and while shifting out of the P (Park) position into another position to avoid inadvertent motion of the vehicle which could injure persons in or around the car.

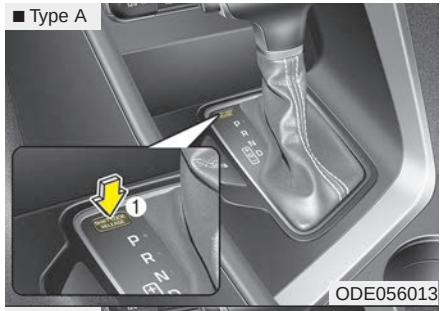

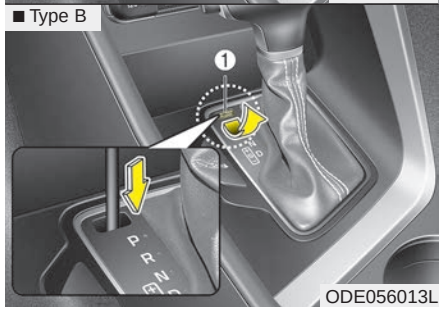

Shift-lock override

If the shift lever cannot be moved from the P (Park) position into R (Reverse) position with the brake pedal depressed, continue depressing the brake, then do the following:

1. Place the ignition switch in the LOCK/OFF position.
2. Apply the parking brake.
3. Carefully remove the cap (1) covering the shift-lock release access hole.
4. Insert a tool (e.g. flathead screwdriver) into the access hole and press down on the tool.
5. Move the shift lever.
6. Remove the tool from the shiftlock override access hole then install the cap.
7. We recommend that the system be inspected by an authorized Kia dealer.

Ignition key interlock system (if equipped)

The ignition key cannot be removed unless the shift lever is in the P (Park) position.

Good driving practices

- Never move the shift lever from P (Park) or N (Neutral) to any other position with the accelerator pedal depressed.
- Never move the shift lever into P (Park) when the vehicle is in motion.
- Be sure the car is completely stopped before you attempt to shift into R (Reverse) or D (Drive).
- Never take the car out of gear and coast down a hill. This may be extremely hazardous. Always leave the car in gear when moving.
- Do not "ride" the brakes. This can cause them to overheat and malfunction. Instead, when you are driving down a long hill, slow down and shift to a lower gear. When you do this, engine braking will help slow the car.
- Slow down before shifting to a lower gear. Otherwise, the lower gear may not be engaged.

- Always use the parking brake. Do not depend on placing the transaxle in P (Park) to keep the car from moving.
- Exercise extreme caution when driving on a slippery surface. Be especially careful when braking, accelerating or shifting gears. On a slippery surface, an abrupt change in vehicle speed can cause the drive wheels to lose traction and the vehicle to go out of control.
- Optimum vehicle performance and economy is obtained by smoothly depressing and releasing the accelerator pedal.

⚠ WARNING

- **Always buckle-up! In a collision, an unbelted occupant is significantly more likely to be seriously injured or killed than a properly belted occupant.**
- **Avoid high speeds when cornering or turning.**
- **Do not make quick steering wheel movements, such as sharp lane changes or fast, sharp turns.**
- **The risk of rollover is greatly increased if you lose control of your vehicle at highway speeds.**
- **Loss of control often occurs if two or more wheels drop off the roadway and the driver oversteers to reenter the roadway.**
- **In the event your vehicle leaves the roadway, do not steer sharply. Instead, slow down before pulling back into the travel lanes.**
- **Never exceed posted speed limits.**

⚠ WARNING

If your vehicle becomes stuck in snow, mud, sand, etc., then you may attempt to rock the vehicle free by moving it forward and backward. Do not attempt this procedure if people or objects are anywhere near the vehicle. During the rocking operation the vehicle may suddenly move forward of backward as it becomes unstuck, causing injury or damage to nearby people or objects.

BRAKE SYSTEM

Power brakes

Your vehicle's brake system is power-assisted by the electric hydraulic pump.

In the event the brakes lose power because of a brake control system malfunction, unstable power supply or some other reason, you can still stop your vehicle by applying greater force to the brake pedal than you normally would. The stopping distance, however will be longer. Please have the system checked as soon as possible.

If the brake pedal does not return to its normal position when released, there may be a malfunction in the brake system. We recommend that you contact an authorized Kia dealer.

⚠ WARNING - Brakes

- **Do not drive with your foot resting on the brake pedal. This will create abnormal high brake temperatures, excessive brake lining and pad wear, and increased stopping distances.**

(Continued)

(Continued)

- **When descending a long or steep hill, shift to a lower gear and avoid continuous application of the brakes. Continuous brake application will cause the brakes to overheat and could result in a temporary loss of braking performance.**
- **Wet brakes may impair the vehicle's ability to safely slow down; the vehicle may also pull to one side when the brakes are applied. Applying the brakes lightly will indicate whether they have been affected in this way.**

  Always test your brakes in this fashion after driving through deep water. To dry the brakes, apply them lightly while maintaining a safe forward speed until brake performance returns to normal.

(Continued)

(Continued)

- **Always, confirm the position of the brake and accelerator pedal before driving. If you don't check the position of the accelerator and brake pedal before driving, you may depress the accelerator instead of the brake pedal. It may cause a serious accident.**

✻ NOTICE

- **Do not depress the brake pedal continuously without the " " indicator ON. The battery may be discharged.**
- **Some noise and vibration may occur during braking. This is normal.**
- **In below cases, some electric brake pump noise and motor vibration may occur temporarily. This is normal operation.**
  - **When the pedal is pushed down very quickly**
  - **When the pedal is pushed down multiple times in short intervals**
  - **When the ABS function is activated during braking**

Disc brakes wear indicator

When your brake pads are worn and new pads are required, you will hear a high-pitched warning sound from your front brakes or rear brakes (if equipped). You may hear this sound come and go or it may occur whenever you depress the brake pedal.

Please remember that some driving conditions or climates may cause a brake squeal when you first apply (or lightly apply) the brakes. This is normal and does not indicate a problem with your brakes.

⚠ CAUTION

- ***To avoid costly brake repairs, do not continue to drive with worn brake pads.***
- ***Always replace the front or rear brake pads as pairs.***

⚠ WARNING - Brake wear

This brake wear warning sound means your vehicle needs service. If you ignore this audible warning, you will eventually lose braking performance, which could lead to a serious accident.

Foot parking brake

Applying the parking brake

ODE056015

To engage the parking brake, first apply the foot brake and then depress the parking brake pedal down as far as possible.

⚠ CAUTION

- ***Driving with the parking brake applied will cause excessive brake pad (or lining) and brake rotor wear.***
- ***Do not operate the parking brake while the vehicle is moving except in an emergency situation. It could damage the vehicle system and make endanger driving safety.***

Releasing the parking brake

ODE056014

To release the parking brake, depress the parking brake pedal a second time while applying the foot brake. The pedal will automatically extend to the fully released position.

⚠ WARNING

- **Whenever leaving the vehicle or parking, always come to a complete stop and continue to depress the brake pedal. Move the shift lever into the P (Park) position, then apply the parking brake, and place the Engine Start/Stop button in the OFF position.**

  Vehicles with the parking brake not fully engaged are at risk for moving inadvertently and causing injury to yourself or others.
- **Never allow anyone who is unfamiliar with the vehicle to touch the parking brake. If the parking brake is released unintentionally, serious injury may occur.**
- **All vehicles should always have the parking brake fully engaged when parking to avoid inadvertent movement of the vehicle which can injure occupants or pedestrians.**

Check the brake warning light by pressing engine start/stop button switch ON (do not start the engine). This light will be illuminated when the parking brake is applied with the engine start/stop button switch in the START or ON position.

Before driving, be sure the parking brake is fully released and the brake warning light is off.

If the brake warning light remains on after the parking brake is released while the engine is running, there may be a malfunction in the brake system. Immediate attention is necessary.

If at all possible, cease driving the vehicle immediately. If that is not possible, use extreme caution while operating the vehicle and only continue to drive the vehicle until you can reach a safe location or repair shop.

Anti-lock brake system (ABS)

⚠ WARNING

ABS (or ESC) will not prevent accidents due to improper or dangerous driving maneuvers. Even though vehicle control is improved during emergency braking, always maintain a safe distance between you and objects ahead. Vehicle speeds should always be reduced during extreme road conditions.

The braking distance for vehicle equipped with an anti-lock braking system (or Electronic Stability Control) may be longer than for those without it in the following road conditions.

During these conditions the vehicle should be driven at reduced speeds:

- **Rough, gravel or snow-covered roads.**
- **With tire chains installed.**

(Continued)

(Continued)

- **On roads where the road surface is pitted or has different surface height.**

The safety features of an ABS (or ESC) equipped vehicle should not be tested by high speed driving or cornering. This could endanger the safety of yourself or others.

The ABS continuously senses the speed of the wheels. If the wheels are going to lock, the ABS system repeatedly modulates the hydraulic brake pressure to the wheels.

When you apply your brakes under conditions which may lock the wheels, you may hear a “tik-tik” sound from the brakes, or feel a corresponding sensation in the brake pedal. This is normal and it means your ABS is active.

In order to obtain the maximum benefit from your ABS in an emergency situation, do not attempt to modulate your brake pressure and do not try to pump your brakes. Press your brake pedal as hard as possible or as hard as the situation warrants and allow the ABS to control the force being delivered to the brakes.

✻ NOTICE

A click sound may be heard in the engine compartment when the vehicle begins to move after the engine is started. These conditions are normal and indicate that the anti-lock brake system is functioning properly.

- Even with the anti-lock brake system, your vehicle still requires sufficient stopping distance. Always maintain a safe distance from the vehicle in front of you.
- Always slow down when cornering. The anti-lock brake system cannot prevent accidents resulting from excessive speeds.
- On loose or uneven road surfaces, operation of the anti-lock brake system may result in a longer stopping distance than for vehicles equipped with a conventional brake system.

W-78

⚠ CAUTION

- *If the ABS warning light is on and stays on, you may have a problem with the ABS. In this case, however, your regular brakes will work normally.*

(Continued)

(Continued)

- *The ABS warning light will stay on for approximately 3 seconds after the ignition switch is ON. During that time, the ABS will go through self-diagnosis and the light will go off if everything is normal. If the light stays on, you may have a problem with your ABS. We recommend that you contact an authorized Kia dealer.*

⚠ CAUTION

- *When you drive on a road having poor traction, such as an icy road, and operate your brakes continuously, the ABS will be active continuously and the ABS warning light may illuminate. Pull your vehicle over to a safe place and stop the engine.*

(Continued)

(Continued)

- *Restart the engine. If the ABS warning light is off, then your ABS system is normal. Otherwise, you may have a problem with the ABS. We recommend that you contact an authorized Kia dealer.*

✻ NOTICE

When you jump start your vehicle because of a drained battery, the engine may not run as smoothly and the ABS warning light may turn on at the same time. This happens because of the low battery voltage. It does not mean your ABS is malfunctioning.

- **Do not pump your brakes!**
- **Have the battery recharged before driving the vehicle.**

Electronic stability control (ESC) (if equipped)

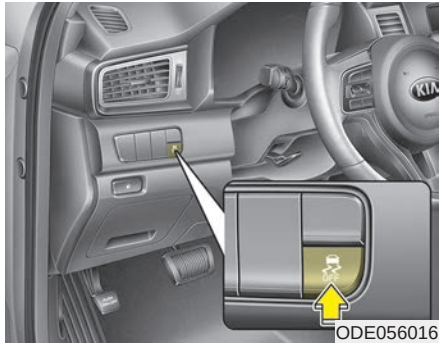

The Electronic Stability Control (ESC) system is designed to stabilize the vehicle during cornering maneuvers. ESC checks where you are steering and where the vehicle is actually going. ESC applies the brakes at individual wheels and intervenes with engine management system to stabilize the vehicle.

⚠ WARNING

Never drive too fast for the road conditions or too quickly when cornering. Electronic stability control (ESC) will not prevent accidents. Excessive speed in turns, abrupt maneuvers and hydroplaning on wet surfaces can still result in serious accidents. Only a safe and attentive driver can prevent accidents by avoiding maneuvers that cause the vehicle to lose traction. Even with ESC installed, always follow all the normal precautions for driving - including driving at safe speeds for the conditions.

The Electronic stability control (ESC) system is an electronic system designed to help the driver maintain vehicle control under adverse conditions. It is not a substitute for safe driving practices. Factors including speed, road conditions and driver steering input can all affect whether ESC will be effective in preventing a loss of control. It is still your responsibility to drive and corner at reasonable speeds and to leave a sufficient margin of safety.

When you apply your brakes under conditions which may lock the wheels, you may hear a “tik-tik” sound from the brakes, or feel a corresponding sensation in the brake pedal. This is normal and it means your ESC is active.

✻ NOTICE

A click sound may be heard in the engine compartment when the vehicle begins to move after the engine is started. These conditions are normal and indicate that the Electronic stability control (ESC) System is functioning properly.

ESC operation

ESC ON condition

-

- When the ignition is turned ON, ESC and ESC OFF indicator lights illuminate for approximately 3 seconds, then ESC is turned on.
- Press the ESC OFF button for at least half a second after turning the ignition ON to turn ESC off. (ESC OFF indicator will illuminate). To turn the ESC on, press the ESC OFF button (ESC OFF indicator light will go off).
- When starting the engine, you may hear a slight ticking sound. This is the ESC performing an automatic system self-check and does not indicate a problem.

When operating

When the ESC is in operation, ESC indicator light blinks.

- When the Electronic Stability Control is operating properly, you can feel a slight pulsation in the vehicle. This is only the effect of brake control and indicates nothing unusual.
- When moving out of the mud or slippery road, the engine rpm (revolution per minute) may not increase even if you press the accelerator pedal deeply. This is to maintain the stability and traction of the vehicle and does not indicate a problem.

ESC operation off

ESC OFF state

This car has 2 kinds of ESC off states.

If the engine stops when ESC is off, ESC remains off. Upon restarting the engine, the ESC will automatically turn on again.

"Traction Control disabled"

• ESC off state 1

To cancel ESC operation, press the ESC OFF button (ESC OFF) shortly (ESC OFF indicator light (ESC OFF) illuminates) and an above LCD message will come up. At this state, the engine control function does not operate. It means the traction control function does not operate. Brake control function only operates.

"Traction & Stability Control disabled"

• ESC off state 2

To cancel ESC operation, press the ESC OFF button (ESC OFF) for more than 3 seconds. ESC OFF indicator light (ESC OFF) illuminates and an above LCD message will come up and ESC OFF warning chime will sound. At this state, the engine control function and brake control function do not operate. It means the car stability control function does not operate any more.

Indicator light

■ ESC indicator light

■ ESC OFF indicator light

When ignition switch is turned to ON, the indicator light illuminates, then goes off if the ESC system is operating normally.

The ESC indicator light blinks whenever ESC is operating or illuminates when ESC fails to operate.

ESC OFF indicator light comes on when the ESC is turned off with the button.

⚠ CAUTION

Driving with varying tire or wheel sizes may cause the ESC system to malfunction. When replacing tires, make sure they are the same size as your original tires.

⚠ WARNING

The Electronic Stability Control system is only a driving aid; use precautions for safe driving by slowing down on curved, snowy, or icy roads. Drive slowly and don't attempt to accelerate whenever the ESC indicator light is blinking, or when the road surface is slippery.

ESC OFF usage

When driving

- ESC should be turned on for daily driving whenever possible.
- To turn ESC off while driving, press the ESC OFF button while driving on a flat road surface.

⚠ WARNING

Never press the ESC OFF button while ESC is operating (ESC indicator light blinks).

If ESC is turned off while ESC is operating, the vehicle may slip out of control.

✻ NOTICE

- **When operating the vehicle on a dynamometer, ensure that the ESC is turned off by pressing the ESC OFF button for more than 3 seconds (ESC OFF light illuminated). If the ESC is left on, it may prevent the vehicle speed from increasing, and result in false diagnosis.**
- **Turning the ESC off does not affect ABS or brake system operation.**

Vehicle stability management (VSM) (if equipped)

This system provides further enhancements to vehicle stability and steering responses when a vehicle is driving on a slippery road or a vehicle detected changes in coefficient of friction between right wheels and left wheels when braking.

VSM operation

When the VSM is operating:

- ESC (Electronic Stability Control) ( ) light will blink.
- The steering wheel may be controlled.

When the vehicle stability management is operating properly, you can feel a slight pulsation in the vehicle. This is only the effect of brake control and indicates nothing unusual.

The VSM does not operate when:

- Driving on bank road such as gradient or incline
- Driving rearward
- ESC OFF indicator light ( ) remains on the instrument cluster
- EPS (Electronic Power Steering) indicator light remains on the instrument cluster

VSM operation off

If you press the ESC OFF button to turn off the ESC, the VSM will also cancel and the ESC OFF indicator light ( ) illuminates.

To turn on the VSM, press the button again. The ESC OFF indicator light goes out.

Malfunction indicator

The VSM can be deactivated even if you don't cancel the VSM operation by pressing the ESC OFF button. It indicates that a malfunction has been detected somewhere in the EPS (Electronic Power Steering) system or VSM system. If the ESC indicator light ( ) or EPS warning light remains on, we recommend that the system be checked by an authorized Kia dealer.

✻ NOTICE

- **The VSM is designed to function above approximately 22 km/h (13 mph) on curves.**
- **The VSM is designed to function above approximately 10 km/h (6 mph) when a vehicle is braking on a split-mu road. The split-mu road is made of surfaces which have different friction forces.**

⚠ WARNING

- **The Vehicle Stability Management system is not a substitute for safe driving practices but a supplementary function only. It is the responsibility of the driver to always check the speed and the distance to the vehicle ahead. Always hold the steering wheel firmly while driving.**
- **Your vehicle is designed to activate according to the driver's intention, even with the VSM installed. Always follow all the normal precautions for driving at safe speeds for the conditions – including driving in inclement weather and on a slippery road.**
- **Driving with varying tire or wheel sizes may cause the VSM system to malfunction. When replacing tires, make sure they are the same size as your original tires.**

Hill-start assist control (HAC) (if equipped)

A vehicle has the tendency to slip back on a steep hill when it starts to go after stopping. The Hill-start Assist Control (HAC) prevents the vehicle from slipping back by operating the brakes automatically for about 1~2 seconds. The brakes are released when the accelerator pedal is depressed or after about 1~2 seconds.

⚠ WARNING

The HAC is activated only for about 1~2 seconds, so when the vehicle is starting off always depress the accelerator pedal.

✻ NOTICE

- **The HAC does not operate when the transaxle shift lever is in the P (Park) or N (Neutral) position.**
- **The HAC activates even though the ESC is off but it does not activate when the ESC has malfunctioned.**

Emergency Stop Signal (ESS) (if equipped)

The Emergency Stop Signal system alerts the driver behind by blinking the stop light when the vehicle is braked rapidly and severely.

The system is activated when:

- The vehicle suddenly stops (vehicle speed is over 55km/h and the vehicle deceleration at greater than 7 m/s^2)
- The ABS is activating

When the vehicle speed is under 40 km/h and the ABS deactivates or the sudden stop situation is over, the stop light blinking will stop. Instead, the hazard warning flasher will turn on automatically.

The hazard warning flasher will turn off when vehicle speed is over 10km/h after the vehicle has stopped. Also, it will turn off when the vehicle is driven at low speed for some time. You can turn it off manually by pushing the hazard warning flasher switch.

⚠ CAUTION

The Emergency Stop Signal (ESS) system will not work if the hazard warning flasher is already on.

Good braking practices

⚠ WARNING

- **Whenever you leave or park your vehicle, always set the parking brake as far as possible and fully engage the vehicle's transaxle into the P (Park) position. If the parking brake is not fully engaged, the vehicle may move inadvertently and injure yourself and others.**
- **All vehicles should always have the parking brake fully engaged when parking to avoid inadvertent movement of the vehicle which can injure occupants or pedestrians.**

- Check to be sure the parking brake is not engaged and that the parking brake indicator light is out before driving away.
- Driving through water may get the brakes wet. They can also get wet when the vehicle is washed. Wet brakes can be dangerous! Your vehicle will not stop as quickly if the brakes are wet. Wet brakes may cause the vehicle to pull to one side.

  To dry the brakes, apply the brakes lightly until the braking action returns to normal, taking care to keep the vehicle under control at all times. If the braking action does not return to normal, stop as soon as it is safe to do so and we recommend that you call an authorized Kia dealer.
- Do not coast down hills with the vehicle out of gear. This is extremely hazardous. Keep the vehicle in gear at all times, use the brakes to slow down, then shift to a lower gear so that engine braking will help you maintain a safe speed.
- Do not "ride" the brake pedal. Resting your foot on the brake pedal while driving can be dangerous because it can result in the brakes overheating and losing their effectiveness. It also increases the wear of the brake components.
- If a tire goes flat while you are driving, apply the brakes gently and keep the vehicle pointed straight ahead while you slow down. When you are moving slowly enough for it to be safe to do so, pull off the road and stop in a safe place.
- If your vehicle is equipped with an Dual clutch transmission, do not let your vehicle creep forward. To avoid creeping forward, keep your foot firmly on the brake pedal when the vehicle is stopped.
- Be cautious when parking on a hill. Firmly engage the parking brake and place the shift lever in P (dual clutch transmission). If your vehicle is facing downhill, turn the front wheels into the curb to help keep the vehicle from rolling.

  If your vehicle is facing uphill, turn the front wheels away from the curb to help keep the vehicle from rolling. If there is no curb or if it is required by other conditions to keep the vehicle from rolling, block the wheels.
- Under some conditions your parking brake can freeze in the engaged position. This is most likely to happen when there is an accumulation of snow or ice around or near the rear brakes or if the brakes are wet. If there is a risk that the parking brake may freeze, apply it only temporarily while you put the shift lever in P (Dual clutch transmission) and block the rear wheels so the vehicle cannot roll. Then release the parking brake.
- Do not hold the vehicle on the upgrade with the accelerator pedal. This can cause the transaxle to overheat. Always use the brake pedal or parking brake.

ASSIST EMERGENCY BRAKING (AEB) (IF EQUIPPED)

The AEB system is to reduce or to avoid accident risk. It recognizes the distance from the vehicle ahead or the pedestrian through the sensors (i.e. radar and camera), and, if necessary, warns the driver of accident risk with the warning message or the warning alarms.

⚠ WARNING

Take the following precautions when using the Assist Emergency Braking (AEB):

- **This system is only a supplemental system and it is not intended to, nor does it replace the need for extreme care and attention of the driver. The sensing range and objects detectable by the sensors are limited. Pay attention to the road conditions at all times.**
- **NEVER drive too fast in accordance with the road conditions or while cornering.**
- **Always drive cautiously to prevent unexpected and sudden situations from occurring. AEB does not stop the vehicle completely and does not avoid collisions.**

System setting and activation

System setting

The driver can activate the AEB by placing the ignition switch to the ON position and by selecting 'User Settings', 'Driving Assist', and 'Assist Emergency Braking'. The AEB deactivates, when the driver cancels the system setting.

The warning light illuminates on the LCD display, when you cancel the AEB system. The driver can monitor the AEB ON/OFF status on the LCD display. When the warning light remains ON with the AEB activated, we recommend you to have the system checked by an authorized Kia dealer.

The driver can select the initial warning activation time in the User Settings in the instrument cluster LCD display. The options for the initial Forward Collision Warning include the following:

- EARLY - When this condition is selected, the initial Forward Collision Warning is activated earlier than normal. This setting maximizes the amount of distance between the vehicle or pedestrian ahead before the initial warning occurs.
- NORMAL - When this condition is selected, the initial Forward Collision Warning is activated normally. This setting allows for a nominal amount of distance between the vehicle or pedestrian ahead before the initial warning occurs.
- LATE - When this condition is selected, the initial Forward Collision Warning is activated later than normal. This setting reduces the amount of distance between the vehicle or pedestrian ahead before the initial warning occurs.

Prerequisite for activation

The AEB gets ready to be activated, when the AEB is selected on the LCD display, and when the following prerequisites are satisfied.

- The ESC is activated.
- The driving speed is over 10km/h. (However, AEB is activated within certain driving speed.)
- When recognizing the vehicle or the pedestrian in front. (However, AEB does not activate according to conditions in front and vehicle systems, but it notices only certain warnings.)

⚠ WARNING

- **The AEB automatically activates upon placing the ignition switch to the ON position. The driver can deactivate the AEB by canceling the system setting on the LCD display.**
- **The AEB automatically deactivates upon canceling the ESC. When the ESC is canceled, the AEB cannot be activated on the LCD display.**
- **Set or cancel AEB with controlling switches on steering wheel after stopping the vehicle in the safe place for your safety.**

AEB warning message and system control

The AEB produces warning messages and warning alarms in accordance with the collision risk levels of followings like vehicle's sudden braking in front or lack of vehicle to vehicle distance or collision to pedestrians. Also, it controls the brakes in accordance with the collision risk levels.

Forward Warning (1st warning)

ODE056075L

The warning message appears on the LCD display with the warning alarms.

Collision Warning (2nd warning)

ODE056076L

- The warning message appears on the LCD display with the warning alarms.
- The AEB controls the brakes within certain limit to release shock from the collision.

Emergency braking (3rd warning)

ODE056077L

- The warning message appears on the LCD display with the warning alarms.
- The AEB controls the brakes within certain limit to release shock from the collision.

  The AEB controls the maximum brakes just before the collision.

Brake operation

- In an urgent situation, the braking system enters into the ready status for prompt reaction against the driver's depressing the brake pedal.
- The AEB provides additional braking power for optimum braking performance, when the driver depresses the brake pedal.
- The braking control is automatically deactivated, when the driver sharply depresses the brake pedal, or when the driver abruptly operates the steering wheel.
- The braking control is automatically canceled, when risk factors disappear.

⚠ CAUTION

The driver should always pay great caution to vehicle operation, even though there is no warning message or warning alarm.

⚠ WARNING

The AEB cannot avoid all collisions. The AEB might not completely stop the vehicle before collision, due to ambient, weather and road conditions. The driver has the responsibility to drive safely and control the vehicle.

⚠ WARNING

The AEB operates in accordance with the risk levels, such as the distance from the vehicle/passer-by in front, the speed of the vehicle/passer-by in front, and the driver's vehicle operation.

Sensor to detect the distance from the vehicle in front (front radar)

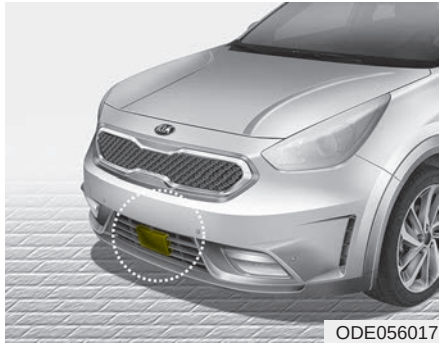
ODE056017

The sensor is to maintain a certain distance from the vehicle in front. However, the smudged sensor lens with foreign substances, such as snow and rain, adversely affects the sensing performance. It may even temporarily cancel the AEB. Always keep the sensor lens clean.

Warning message and warning light

ODE056078L

When the sensor cover or the sensor lens is smudged with the foreign substances, such as snow or rain, the AEB operation may temporarily stop. In this case, the warning message appears to warn the driver.

This is not a malfunction with the AEB. To operate the AEB again, remove the foreign substances.

If the AEB system cannot detect any external object after engine ignition, (when the vehicle is located in open, empty surroundings) the AEB system may not operate properly.

✻ NOTICE

- **Do not install any accessories, such as license plate molding or sticker, on the sensor area. Nor arbitrarily replace the bumper. Those may adversely affect the sensing performance.**
- **Always keep the sensor/bumper area clean.**
- **Use only soft clothes to wash the vehicle. Also, do not spray highly-pressurized water on the sensor installed on the bumper.**
- **Be careful not to apply unnecessary force on the frontal sensor area. When the sensor moves out of the correct position due to external force, the system may not normally operate even without the warning light or message. In this case, we recommend you to have the vehicle inspected by an authorized Kia dealer.**
- **Use only the genuine Kia sensor cover. Do not arbitrarily apply paint on the sensor cover.**

System malfunction

ODE056079L

- When the AEB is not working properly, the AEB warning light ( ) will illuminate and the warning message will appear for a few seconds. After the message disappears, the master warning light ( ) will illuminate. In this case, we recommend you to have the vehicle inspected by an authorized Kia dealer.
- The AEB warning message may appear along with the illumination of the ESC warning light.

⚠ WARNING

- **The AEB is only a supplemental system for the driver's convenience. The driver should hold the responsibility to control the vehicle operation. Do not solely depend on the AEB system. Rather, maintain a safe braking distance, and, if necessary, depress the brake pedal to lower the driving speed.**
- **The AEB may unnecessarily produce the warning message and the warning alarms. Also, due to the sensing limitation, the AEB may not produce the warning message and the warning alarm at all.**
- **When there is a malfunction with the AEB, the braking control does not operate upon detecting a collision risk even with other braking systems normally operating.**

(Continued)

(Continued)

- **The AEB operates only for the vehicle / pedestrian in front, while driving forward. It does not operate for any animals or vehicles in the opposite direction.**
- **The AEB does not recognize the vehicle, which horizontally drives across the crossroad, or the vehicle, which is parked in the horizontal direction.**
- **If the vehicle in front stops suddenly, you may have less control of the brake system. Therefore, always keep safe distance between your vehicle and the vehicle in front of you.**
- **The AEB system may activate during braking and the vehicle may stop suddenly. And the load in the vehicle may endanger passengers. Therefore, always be mindful of the load volume in the vehicle.**

(Continued)

(Continued)

- **The AEB system may not activate if the driver applies the brake pedal to avoid risk of collision.**

Limitation of the system

The AEB is an assistant system for a driver in a certain risky driving condition and it does not take every responsibility for all risks from driving condition.

The AEB monitors the driving situations through the radar and the camera sensor. Thus, for a situation out of the sensing range, the AEB may not normally operate. The driver should pay great caution in the following situations. The AEB operation may be limited.

Recognizing vehicles

- The radar or the camera is contaminated with foreign substances.
- It heavily rains or snows.
- There is interruption by electric waves.
- There is severe irregular reflection from the radar.
- The vehicle in front has a narrow body. (i.e. motor cycle and bicycle)
- The driver's view is unclear due to the backlight, the reflected light, or darkness.
- The camera cannot contain the full image of the vehicle in front.
- The vehicle in front is a special vehicle, such as a heavily-loaded truck or a trailer. The vehicle in front does not turn ON the rear lights, does not have rear lights, has asymmetric rear lights, or has rear lights out of angle.
- When the vehicle is on unpaved or uneven rough surfaces, or roads with sudden gradient changes.
- When the vehicle is moving under ground level or inside a building.
- The outside brightness is greatly changed, such as entering/exiting the tunnel.
- The vehicle driving is unstable.
- The radar/camera sensor recognition is limited.

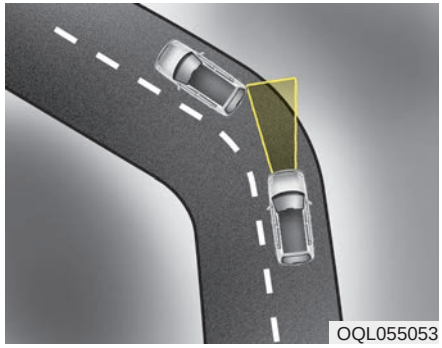
OQL055053

- Driving on a curve

The AEB performance decreases while driving on a curve. The AEB may not recognize the vehicle in front even in the same lane. It may unnecessarily produce the warning message and the warning alarm, or it may not produce the warning message and the warning alarm at all.

While driving on a curve, pay great caution, and, if necessary, depress the brake pedal.

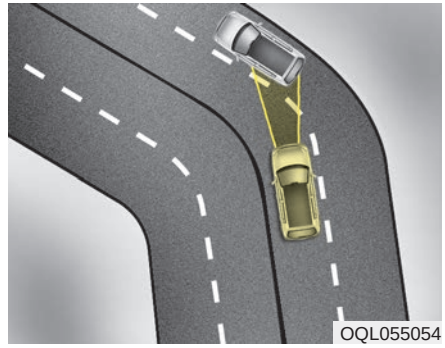
OQL055054

While driving on a curve, the AEB may recognize the vehicle in front in the next lane. Pay great caution, and, if necessary, depress the brake pedal.

Or, depress the accelerator pedal to maintain the driving speed. Always, take a look around the vehicle for your safety.

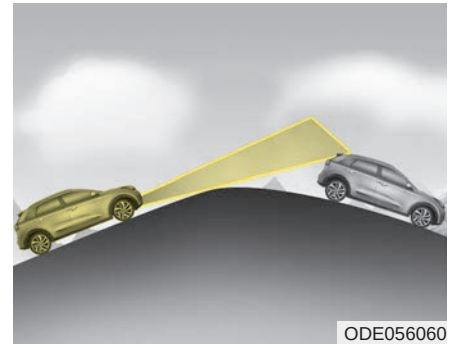
ODE056060

- Driving on a slope

The AEB performance decreases while driving upward or downward on a slope, not recognizing the vehicle in front in the same lane. It may unnecessarily produce the warning message and the warning alarm, or it may not produce the warning message and the warning alarm at all.

When the AEB suddenly recognizes the vehicle in front while passing over a slope, you may experience sharp deceleration.

Always keep your eyes forward while driving upward or downward on a slope, and, if necessary, depress the brake pedal.

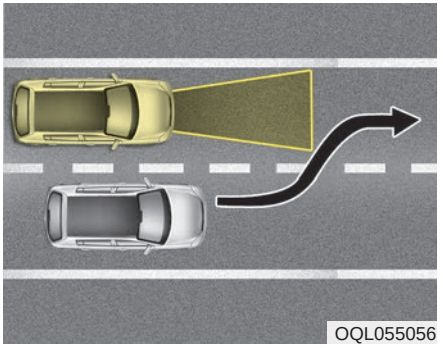

- Changing lanes

Even though the vehicle in the next lane enters into your lane, it may not be recognized by the AEB, until it enters the AEB sensing range.

Especially when the vehicle in the next lane abruptly enters into your lane, it is more likely not be recognized. Always pay great attention.

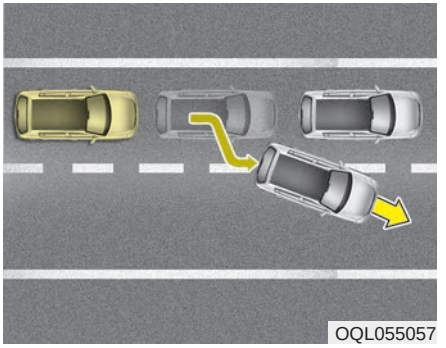

When the stopped vehicle in front gets out of the lane, it may not be recognized by your AEB. Always pay great attention.

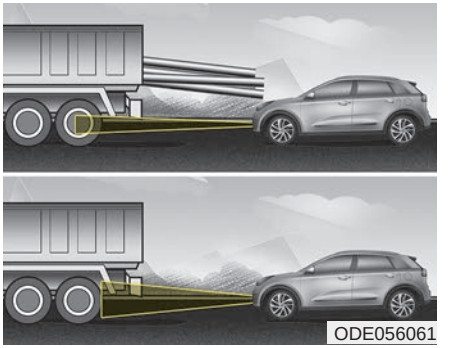

- Recognizing the vehicle

When the vehicle in front has heavy loading extended rearward, or when the vehicle in front has higher ground clearance, it may induce a hazardous situation.

Recognizing pedestrians

- The pedestrian is not fully captured by the camera sensor, or the pedestrian does not walk in the upright position.
- The pedestrian moves very fast.
- The pedestrian abruptly appears in front.
- The pedestrian wears clothes in the color similar to the background.
- The outside is too bright or too dark.
- The vehicle drives at night or in the darkness.
- There is an item similar to a person's body structure.
- The pedestrian is small.
- The pedestrian has impaired mobility.
- It is difficult to distinguish the pedestrian from the surroundings.
- The sensor recognition is limited.
- There is a group of pedestrians.

⚠ WARNING

- **Cancel the AEB in the User Settings on the LCD display, before towing another vehicle. While towing, the brake application may adversely affect your vehicle safety.**
- **Pay great caution to the vehicle in front, when it has heavy loading extended rearward, or when it has higher ground clearance.**
- **The sensor only detects pedestrian, not carts, bicycles, motorcycles, luggage bags, or strollers.**
- **The AEB does not operate in a certain situation. Thus, never test-operate the AEB against a person or an object. It may cause a severe injury or even death.**

✻ NOTICE

The system may temporarily cancel due to the strong electric waves.

CRUISE CONTROL SYSTEM (IF EQUIPPED)

■ Type A

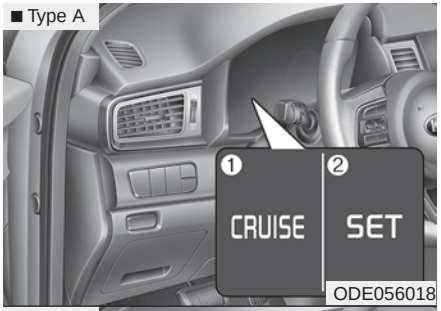

ODE056018

■ Type B

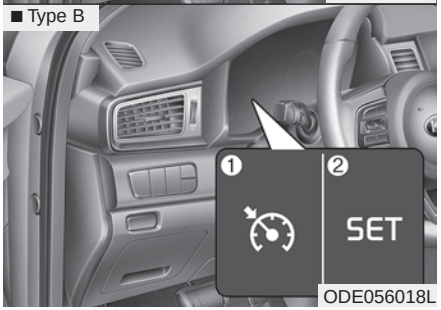

ODE056018L

1. Cruise indicator
2. Cruise set indicator

The cruise control system allows you to program the vehicle to maintain a constant speed without pressing the accelerator pedal.

This system is designed to function above approximately 30 km/h (20 mph).

⚠ WARNING

- **If the cruise control is left on, (cruise indicator light is illuminated), the cruise control can be switched on accidentally. Keep the cruise control system off when the cruise control is not in use, to avoid inadvertently setting a speed.**
- **Use the cruise control system only when traveling on open highways in good weather.**
- **Do not use the cruise control when it may not be safe to keep the vehicle at a constant speed, for instance, driving in heavy or varying traffic, or on slippery (rainy, icy or snow-covered) or winding roads or over 6% up-hill or down-hill roads.**

(Continued)

(Continued)

- **Pay particular attention to the driving conditions whenever using the cruise control system.**
- **Be careful when driving downhill using the cruise control system, which may increase the vehicle speed.**

✻ NOTICE

- **During normal cruise control operation, when the SET switch is activated or reactivated after applying the brakes, the cruise control will energize after approximately 3 seconds. This delay is normal.**
- **To activate cruise control, depress the brake pedal at least once after turning the ignition switch to the ON position or starting the engine. This is to check if the brake switch which is important part to cancel cruise control is in normal condition.**

Cruise control switch

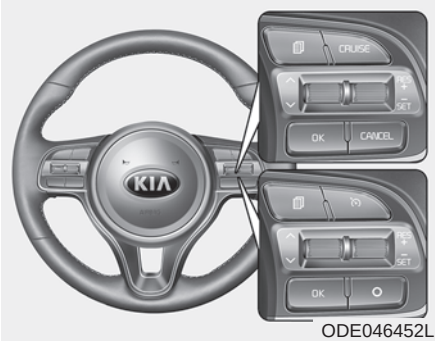

ODE046452L

CANCEL/O : Cancels cruise control operation.

CRUISE / : Turns cruise control system on or off.

RES+ : Resumes or increases cruise control speed.

SET- : Sets or decreases cruise control speed.

To set cruise control speed:

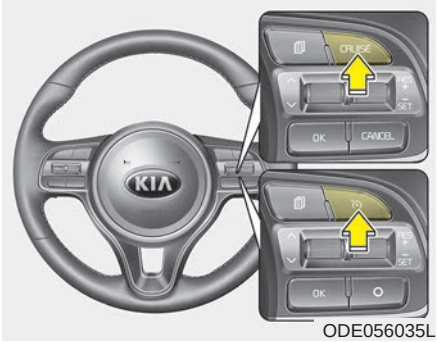

ODE056035L

1. Press the CRUISE / button on the steering wheel, to turn the system on. The cruise indicator light will illuminate.
2. Accelerate to the desired speed, which must be more than approximately 30 km/h (20 mph).

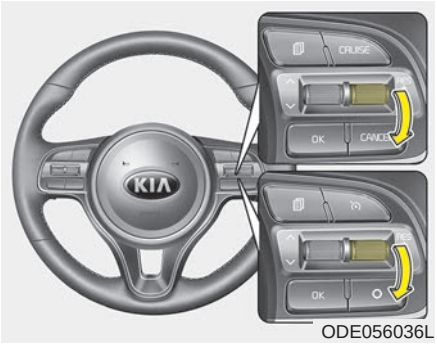

ODE056036L

3. Move the lever down (to SET-), and release it at the desired speed. The cruise set indicator light will illuminate. Release the accelerator pedal at the same time. The desired speed will automatically be maintained.

On a steep grade, the vehicle may slow down or speed up slightly while going downhill.

To increase cruise control set speed:

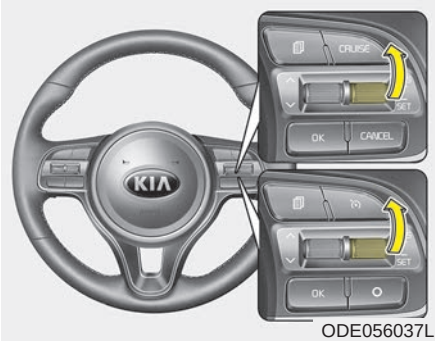

ODE056037L

Follow either of these procedures:

- Move the lever up (to RES+) and hold it. Your vehicle will accelerate. Release the lever at the speed you want.
- Move the lever up (to RES+) and release it immediately. The cruising speed will increase by 2 km/h (1 mph) each time you move the lever up (to RES+) in this manner.

To decrease the cruising speed:

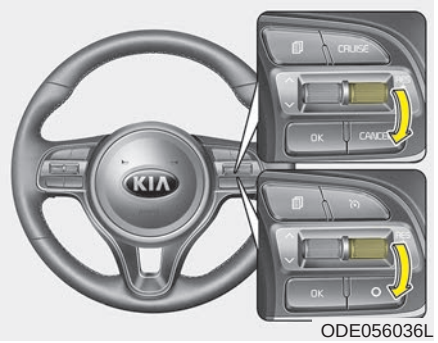

ODE056036L

Follow either of these procedures:

- Move the lever down (to SET-) and hold it. Your vehicle will gradually slow down. Release the lever at the speed you want to maintain.
- Move the lever down (to SET-) and release it immediately. The cruising speed will decrease by 2 km/h (1 mph) each time you move the lever down (to SET-) in this manner.

To temporarily accelerate with the cruise control on:

If you want to speed up temporarily when the cruise control is on, depress the accelerator pedal. Increased speed will not interfere with cruise control operation or change the set speed.

To return to the set speed, take your foot off the accelerator pedal.

To cancel cruise control, do one of the following:

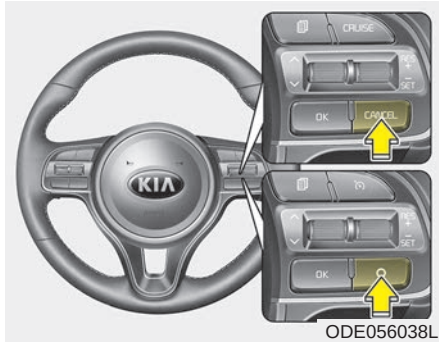

ODE056038L

- Depress the brake pedal.
- Shift into N (Neutral) if equipped with an Dual clutch transmission.
- Press the CANCEL/O button located on the steering wheel.
- Decrease the vehicle speed lower than the memory speed by approximately 20 km/h (12 mph).
- Decrease the vehicle speed to less than approximately 25 km/h (15 mph).

Each of these actions will cancel cruise control operation (the cruise set *indicator light will go off), but it will not turn the system off. If you wish to resume cruise control operation, move up the lever (to RES+) located on your steering wheel. You will return to your previously preset speed.*

To resume cruising speed at more than approximately 30 km/h (20 mph).

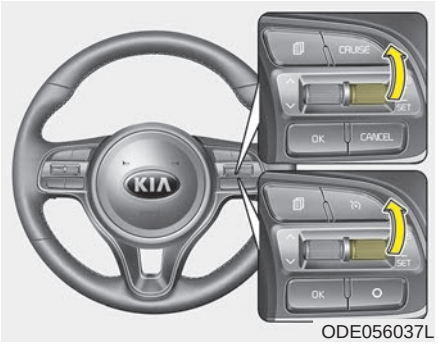

ODE056037L

If any method other than the CRUISE / button was used to cancel cruising speed and the system is still activated, the most recent set speed will automatically resume when the RES+ switch is pushed.

It will not resume, however, if the vehicle speed has dropped below approximately 30 km/h (20 mph).

To turn cruise control off, do one of the following:

- Press the CRUISE/ button (the cruise indicator light will be turn off).
- If your vehicle equipped the speed limit system, press the CRUISE/ MODE button twice. (The cruise indicator light will be turn off.)
- Turn the ignition off.

Both of these actions cancel cruise control operation. If you want to resume cruise control operation, repeat the steps provided in “To set cruise control speed” on the previous page.

SMART CRUISE CONTROL SYSTEM (IF EQUIPPED)

ODE056095L

① Cruise indicator
② Set speed
③ Vehicle-to-vehicle distance

The smart cruise control system allows you to program the vehicle to maintain constant speed and distance detecting the vehicle ahead without depressing the accelerator or brake pedal.

⚠ WARNING

For your safety, please read the owner's manual before using the smart cruise control system.

✻ NOTICE

To activate smart cruise control, depress the brake pedal at least once after turning the engine start/stop button switch to the ON position or starting the engine. This is to check if the brake switch which is important part to cancel smart cruise control is in normal condition.

⚠ WARNING

- **If the smart cruise control is left on, (cruise indicator in the instrument cluster illuminated) the smart cruise control can be activated unintentionally. Keep the smart cruise control system off (cruise indicator turn off) when the smart cruise control is not used.**
- **Use the smart cruise control system only when traveling on open highways in good weather.**
- **Do not use the smart cruise control when it may not be safe to keep the car at a constant speed. For instance.**
  - **Highway interchange and tollgate**
  - **Road surrounded by abnormally multiple steel constructions (subway construction, steel tunnel, etc)**

(Continued)

(Continued)

- **Parking lot**
- **Lanes beside guard rail on a road**
- **Slippery road with rain, ice, or snow covered**
- **Abrupt curved road**
- **Steep hills**
- **Windy roads**
- **Off roads**
- **Rods under construction**
- **Rumble strip**
- **The sensing ability decreases if the level of front and rear vehicle is changed from the factory.**

- **Pay particular attention to the driving conditions whenever using the smart cruise control system.**

(Continued)

(Continued)

- **The smart cruise control system is not a substitute for safe driving. It is the responsibility of the driver to always check the speed and distance of the vehicle ahead.**
- **Be careful when driving downhill using the SCC.**

Speed setting

To set cruise control speed:

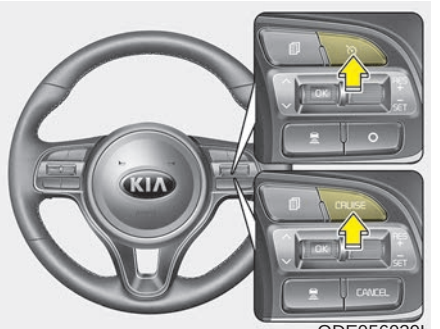

ODE056039L

1. Press the CRUISE button, to turn the system on. The CRUISE indicator in the instrument cluster will illuminate.
2. Accelerate to the desired speed.

   The smart cruise control speed can be set as follows:

   - 30 km/h (20mph) ~ 180 km/h (110 mph): when there is no vehicle in front
   - 10 km/h (6.2mph) ~ 180 km/h (110 mph): when there is a vehicle in front

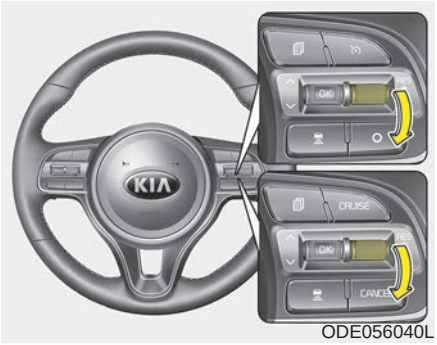

ODE056040L

3. Move the lever down (to SET-), and release it at the desired speed. The set speed and vehicle to vehicle distance on the LCD screen will illuminate.
4. Release the accelerator pedal. The desired speed will automatically be maintained.

If there is a vehicle in front of you, the speed may decrease to maintain the distance to the vehicle ahead.

On a steep grade, the vehicle may slow down or speed up slightly while going uphill or downhill.

To increase cruise control set speed:

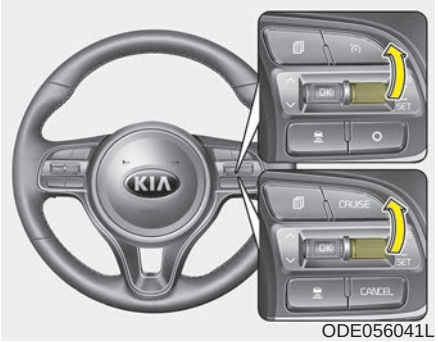

ODE056041L

Follow either of these procedures:

- Move the lever up (to RES+), and hold it. Your vehicle set speed will increase by 10 km/h (5 mph). Release the lever at the speed you want.
- Move the lever up (to RES+), and release it immediately. The cruising speed will increase by 1.0 km/h (1.0 mph) each time you move the lever up (to RES+) in this manner.
- You can set the speed to 180 km/h (110 mph).

To decrease the crusie control set speed:

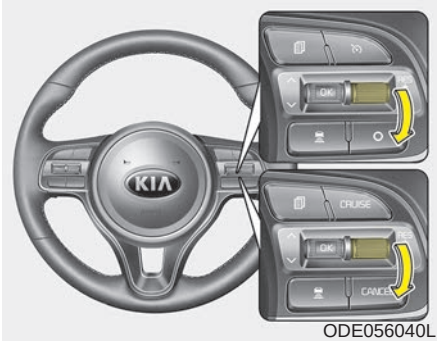

ODE056040L

Follow either of these procedures:

- Move the lever down (to SET-), and hold it. Your vehicle set speed will decrease by 10 km/h (5 mph). Release the lever at the speed you want.
- Move the lever down (to SET-), and release it immediately. The cruising speed will decrease by 1.0 km/h (1.0 mph) each time you move the lever down (to SET-) in this manner.
- You can set the speed to 30 km/h (20 mph).

To temporarily accelerate with the cruise control on:

If you want to speed up temporarily when the cruise control is on, depress the accelerator pedal. Increased speed will not interfere with cruise control operation or change the set speed.

To return to the set speed, take your foot off the accelerator.

If you move the lever down (to SET-) at increased speed, the cruising speed will be set again.

✻ NOTICE

Be careful when accelerating temporarily, because the speed is not controlled automatically at this time even if there is a vehicle in front of you.

smart cruise control will be temporarily canceled when:

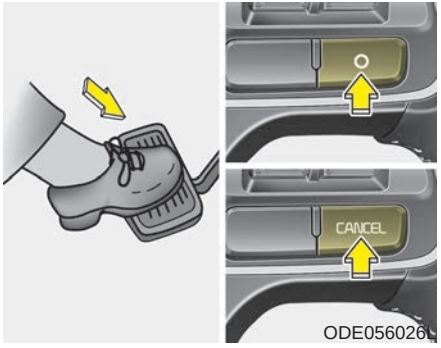

Cancelled manually

The smart cruise control is temporarily canceled when the brake pedal is depressed or the CANCEL button is pressed. The speed and vehicle to vehicle distance indicator on the cluster is disappeared and the CRUISE indicator is illuminated continuously.

Cancelled automatically

- The driver's door is opened.
- The shift lever is shifted to N (Neutral), R (Reverse) or P (Paking).
- The EPB (electronic parking brake) is applied.
- The vehicle speed is over 190 km/h (120 mph)
- The ESC, ABS or TCS is operating.
- The ESC is turned off.
- The sensor or the cover is dirty or blocked with foreign matter.
- The accelerator pedal is continuously depressed for long time.
- The engine speed is in dangerous range.

- The SCC system has malfunctioned.

  Each of these actions will cancel the smart cruise control operation. (the set speed and vehicle to vehicle distance on the LCD display will go off.)

  In a condition the smart cruise control is cancelled automatically, the smart cruise control will not resume even though the RES+ or SET- lever is moved.
- When activating the AEB (Assist Emergency Braking)
- When the parking brake is locked
- Speed of the vehicle has been decreased to less than 10km/h
- Engine has some problems

⚠ CAUTION

If the smart cruise control is cancelled by other than the reasons mentioned, we recommend have the system checked by an authorized Kia dealer.

⚠ CAUTION

If the system is automatically cancelled, the warning chime will sound and a message ("Smart Cruise Control canceled") will appear for a few seconds.

You must adjust the vehicle speed by depressing the accelerator or brake pedal according to the road condition ahead and driving condition.

Always check the road conditions. Do not rely on the warning chime.

To resume cruise control set speed:

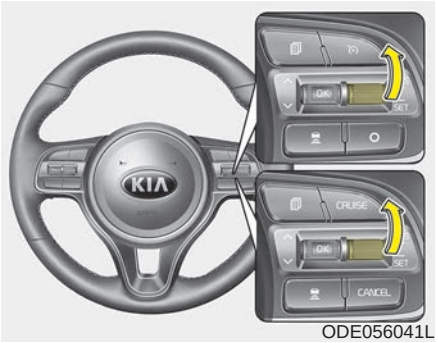

ODE056041L

If any method other than the CRUISE button was used to cancel cruising speed and the system is still activated, the cruising speed will automatically resume when you move the lever up (to RES+).

If you move the lever up (to RES+), the speed will resume to the recently set speed. When the speed of the vehicle is greater than or equal to 10 km/h but less than 30 km/h, the smart cruise control system will be reset only when there is a vehicle in front.

✻ NOTICE

To reduce the risk of an accident, always check the road conditions when reactivating the smart cruise control using the RES+ lever to ensure the road conditions permit safe use of the cruise control.

To turn cruise control off:

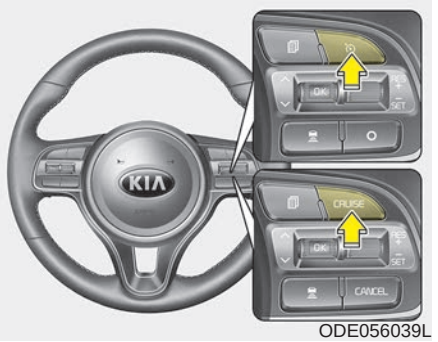

ODE056039L

Press the CRUISE button. (the CRUISE indicator in the instrument cluster will go off).

Vehicle to vehicle distance setting

To set vehicle to vehicle distance:

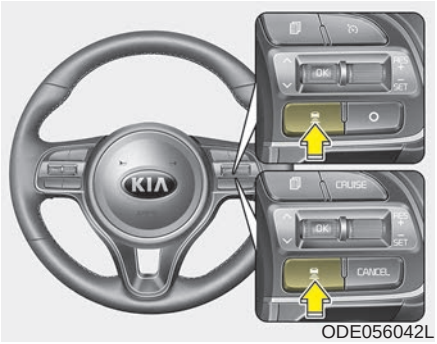

ODE056042L

This function allows you to program the vehicle to maintain relative distance to the vehicle ahead without depressing the accelerator pedal or brake pedal.

The vehicle to vehicle distance will automatically activate when the smart cruise control system is on.

Select the appropriate distance according to road conditions and vehicle speed.

Each time the button is pressed, the vehicle to vehicle distance changes as follows:

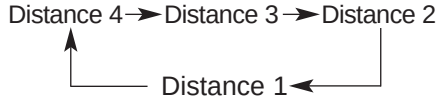

For example, if you drive at 90 km/h (56 mph), the distance maintain as follows;

Distance 4 - approximately 52.5 m
Distance 3 - approximately 40 m
Distance 2 - approximately 32.5 m
Distance 1 - approximately 25 m

✻ NOTICE

The level of distance between vehicles will be set to the level designated by the driver. (Last mode save feature)

✻ NOTICE

The 'Distance 4' is always set when the system is used for the first time after starting the engine.
The smart cruise control system remember the last vehicle to vehicle distance which the driver used in the vehicle with AEB.

Distance 4

ODE056080

Distance 3

ODE056081

Distance 2

ODE056082

Distance 1

ODE056083

- The vehicle will maintain the set speed, when the lane ahead is clear.
- The vehicle will slow down or speed up to maintain the selected distance, when there is a vehicle ahead of you in the lane. (A vehicle will appear in front of your vehicle in the LCD display only when there is an actual vehicle in front of you)
- If the vehicle ahead speeds up, your vehicle will travel at a steady cruising speed after accelerating to the selected speed.

⚠ CAUTION

- ***The warning chime sounds and LCD display blinks if it is hard to maintain the selected distance to the vehicle ahead.***
- ***If the warning chime sounds, actively adjust the vehicle speed by depressing the brake pedal according to the road condition ahead and driving condition.***
- ***Even if the warning chime is not activated, always pay attention to the driving conditions to prevent dangerous situations from occurring.***

ODE056084L

⚠ CAUTION

If the vehicle ahead (vehicle speed: less than 30km/h) disappears to the next lane, the warning chime will sound and a message will appear. Adjust your vehicle speed for vehicles or objects that can suddenly appear in front of you by depressing the brake pedal according to the road condition ahead and driving condition.

Radar to detect distance to the vehicle ahead

ODE056017

The sensor detects the distance to the vehicle ahead.

If the sensor is covered with dirt or other foreign matter, the vehicle to vehicle distance control may not operate correctly.

Always keep the area in front of the sensor clean.

Radar check message

If the radar or cover is dirty or obscured with foreign matter such as snow, this message **("Smart Cruise Control disabled temporarily")** will appear and it will disappear after for a while. In this case, the system may not function temporarily, but it does not indicate a malfunction of the smart cruise control System. Clean the radar or cover by using a soft cloth and it will operate normally.

If the radar front is polluted after the engine has been turned on, or the radar cannot detect any external object (when the vehicle is located in open, empty surroundings), the smart cruise control system may not operate properly.

SCC (smart cruise control) malfunction message

The message **("Check Smart Cruise Control System")** will appear when the vehicle to vehicle distance control system is not functioning normally.

We recommend have the system checked by an authorized Kia dealer.

⚠ CAUTION

- ***Do not install accessories around the sensor and do not replace the bumper by yourself. It may interfere with the sensor performance.***
- ***Always keep the sensor and bumper clean.***
- ***To prevent sensor cover damage from occurring, wash the car with a soft cloth.***
- ***Do not damage the sensor or sensor area by a strong impact. If the sensor moves slightly off position, the smart cruise control system will not operate correctly without any warning or indicator from the cluster.***

  If this occurs, we recommend that the system be checked by an authorized Kia dealer.
- ***Use only a genuine Kia sensor cover for your vehicle. Do not paint anything on the sensor cover.***

To adjust the sensitivity of smart cruise control

The sensitivity of vehicle speed when following the front vehicle to maintain the set distance can be adjusted. Go to the User Settings Mode and select the Driving Assist and select SCC (smart cruise control) and select the Response. You may select one of the three stages you prefer.

- Slow:

  Vehicle speed following the front vehicle to maintain the set distance is slower than normal speed.
- Normal:

  Vehicle speed following the front vehicle to maintain the set distance is normal
- Fast:

  Vehicle speed following the front vehicle to maintain the set distance is faster than normal speed.

✻ NOTICE

The last selected mode is remained in the system

To convert to cruise control mode:

“Smart Cruise Control or Cruise Control”

The driver may choose to only use the cruise control mode (speed control function) by doing as follows:

1. Turn the smart cruise control system on (the cruise indicator light will be on but the system will not be activated).
2. Push the distance to distance switch for more than 2 seconds.
3. Choose between "smart cruise control (SCC) mode" and "Cruise control (CC) mode".

⚠ WARNING

When using the cruise control mode, you must manually access the distance to other vehicles as the system will not automatically brake to slow down for other vehicles.

Limitations of the system

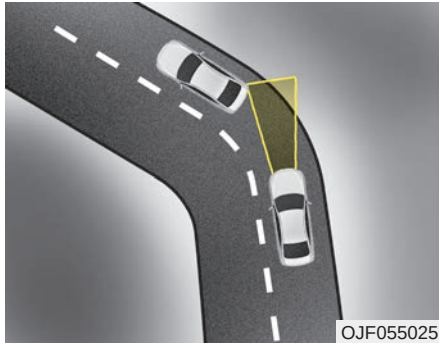
OJF055025

The smart cruise control system may have limits to its ability to detect distance to the vehicle ahead due to road and traffic conditions.

On curves

- On curves, the smart cruise control system may not detect a moving vehicle in your lane, and then your vehicle could accelerate to the set speed. Also, the vehicle speed will rapidly down when the vehicle ahead is recognized suddenly.
- Select the appropriate set speed on curves and adjust your vehicle speed by depressing the accelerator or brake pedal according to the road condition ahead and driving condition.

OJF055026

- Your vehicle speed can be reduced due to a vehicle in the adjacent lane. Adjust your vehicle speed by depressing the brake pedal according to the road condition ahead and driving condition. Apply the accelerator pedal and select the appropriate set speed. Check to be sure that the road conditions permit safe operation of the smart cruise control.

On inclines

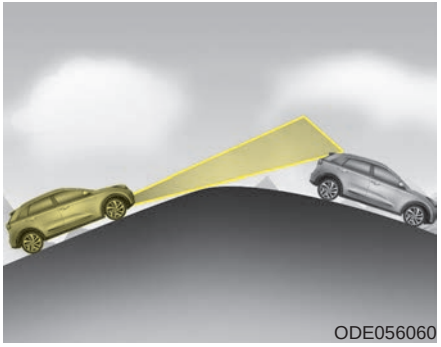
ODE056060

- During uphill or downhill driving, the smart cruise control system may not detect a moving vehicle in your lane, and cause your vehicle to accelerate to the set speed. Also, the vehicle speed will rapidly down when the vehicle ahead is recognized suddenly.
- Select the appropriate set speed on inclines and adjust your vehicle speed by depressing the accelerator or brake pedal according to the road condition ahead and driving condition.

Lane changing

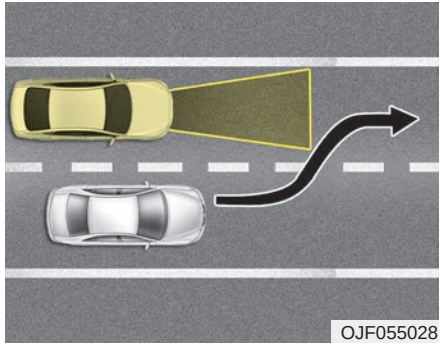
OJF055028

- A vehicle which moves into your lane from an adjacent lane cannot be recognized by the sensor until it is in the sensor's detection range.
- The sensor may not detect immediately when a vehicle cuts in suddenly. Always pay attention to the traffic, road and driving conditions.
- If a vehicle which moves into your lane is slower than your vehicle, your speed may decrease to maintain the distance to the vehicle ahead.
- If a vehicle which moves into your lane is faster than your vehicle, your vehicle will accelerate to the selected speed.

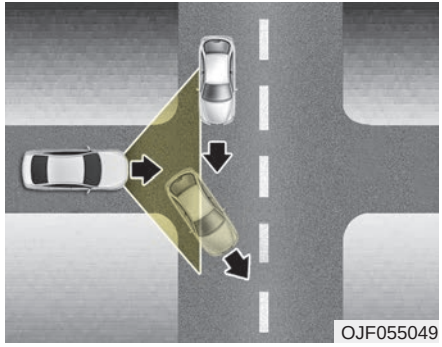
OJF055049

- Your vehicle may accelerate when a vehicle ahead of you disappears.
- When you are warned that the vehicle ahead of you is not detected, drive with caution.

Vehicle recognition

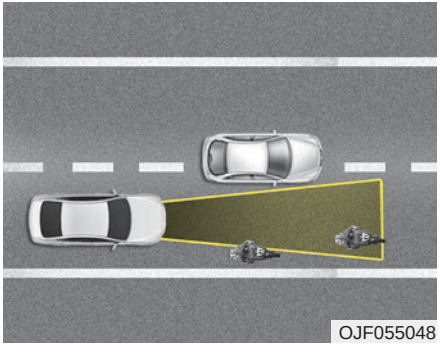
OJF055048

Some vehicles ahead in your lane cannot be recognized by the sensor as follows:

- Narrow vehicles such as motorcycles or bicycles
- Vehicles offset to one side
- Slow-moving vehicles or sudden-decelerating vehicles
- Stopped vehicles
- Vehicles with small rear profile such as trailers with no loads

A vehicle ahead cannot be recognized correctly by the sensor if any of following occurs:

- When the vehicle is pointing upwards due to overloading in the trunk
- While making turns by steering
- When driving to one side of the lane
- When driving on narrow lanes or on curves

Adjust your vehicle speed by depressing the brake pedal according to the road condition ahead and driving condition.

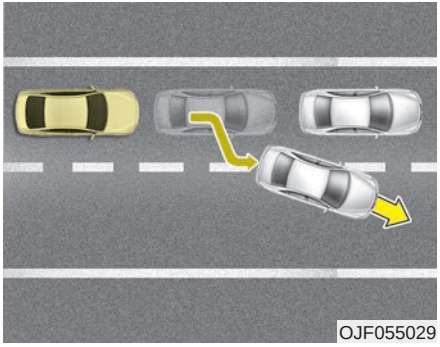
OJF055029

- If the vehicle right in front moves to another direction, the SCC system may not sense stopped vehicle in front and may crash. Always maintain safe distance.

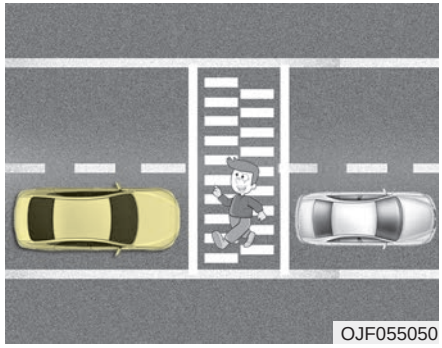

- Always look out for pedestrians when your vehicle is maintaining a distance with the vehicle ahead.

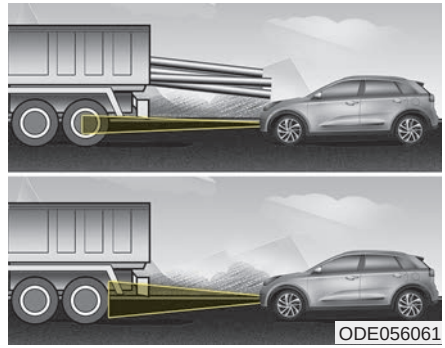

- Always be cautious for vehicles with higher height or vehicles carrying loads that sticks out to the back of the vehicle.

⚠ WARNING

- **The smart cruise control system cannot guarantee the stop for every emergency situation.**

  If an emergency stop is necessary, you must apply the brakes.
- **Keep a safe distance according to road conditions and vehicle speed. If the vehicle to vehicle distance is too close during a high-speed driving, a serious collision may result.**
- **The smart cruise control system cannot recognize a stopped vehicle, pedestrians or an oncoming vehicle. Always look ahead cautiously to prevent unexpected and sudden situations from occurring.**
- **SCC system may have difficulty in maintaining the correct distance or speed, if the vehicle is driving on a steep incline or towing a trailer.**

(Continued)

(Continued)

- When other vehicles are changing lanes in front of you frequently, the smart cruise control system may not operate appropriately. Always look ahead cautiously to prevent unexpected and sudden situations from occurring.
- The smart cruise control system is not a substitute for safe driving practices but a convenience function only. It is the responsibility of the driver to always check the speed and the distance to the vehicle ahead.
- Always be aware of the selected speed and vehicle to vehicle distance.
- Always maintain sufficient braking distance and decelerate your vehicle by applying the brakes if necessary.

(Continued)

(Continued)

- As the smart cruise control system may not recognize complex driving situations, always pay attention to driving conditions and control your vehicle speed.
- For safe operation, carefully read and follow the instructions in this manual before use.
- After an engine start, please stop for several seconds. If system initialization is not completed, the SCC does not normally operate.
- After an engine start, if any objects are not detected or the sensor cover is obscured with foreign substances, there is a possibility that the SCC system may not work.
- Below conditions are not allowed: over baggage loading in a trunk, suspension remodeling, tire replacement with unauthorized tires or tires with different worn-out and pressure levels.

⚠ CAUTION

The smart cruise control system may not operate temporarily due to electrical interference.

SPEED LIMIT CONTROL SYSTEM (IF EQUIPPED)

You can set the speed limit when you do not want to drive over a specific speed.

If you drive over the preset speed limit, the warning system operates (set speed limit will blink and chime will sound) until the vehicle speed returns within the speed limit.

✻ NOTICE

While speed limit control is in operation, the cruise control system cannot be activated.

To set speed limit :

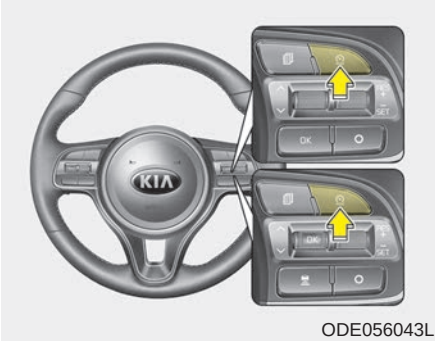

ODE056043L

1. Press the CRUISE & SPEED LIMIT MODE (MODE) button twice on the steering wheel, to turn the system on.

OQLE055137

The speed limit indicator light will illuminate.

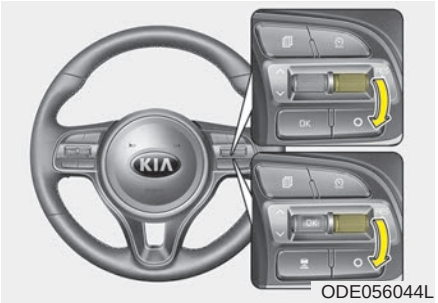

ODE056044L

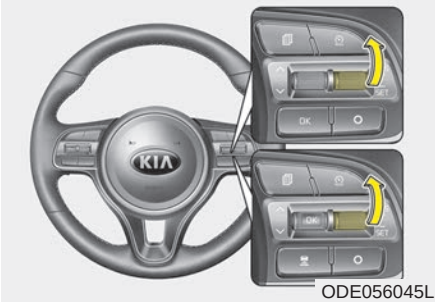

ODE056045L

2. Move the lever down (to SET-).
3. Move the lever up (to RES+) or down (to SET-), and release it at the desired speed. Move the lever up (to RES+) or down (to SET-) and hold it. The speed will increase or decrease by 5 km/h (3 mph).

Move the lever up (to RES+) or down (SET-) and release it immediately. The speed will increase or decrease by 1 km/h.

The set speed limit will display on the instrument cluster.

OQLE045113

The set speed limit will be displayed.

To drive over the preset speed limit you must depress hard on the accelerator pedal (more than approximately 80%) until the kick down mechanism works with a clicking noise. Then the set speed limit will blink and chime will sound until you return the vehicle speed within the speed limit.

✻ NOTICE

- **Depressing the accelerator pedal less than approximately 50%, the vehicle will not speed over the preset speed limit but maintain the vehicle speed within the speed limit.**
- **A clicking noise heard from the kick down mechanism by depressing the accelerator pedal fully is a normal condition.**

To turn off the speed limit control, do one of the following:

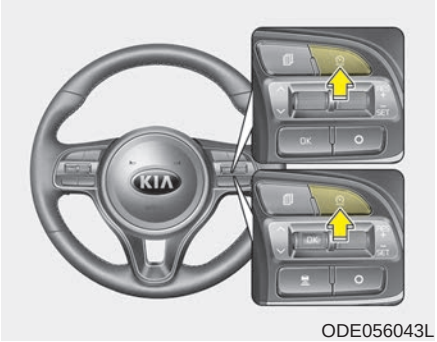

ODE056043L

- Press the CRUISE & SPEED LIMIT MODE switch.
- Turn the ignition off.

If you press the cancel O switch once, the set speed limit will cancel, but it will not turn the system off. If you wish to reset the speed limit, move the lever up (to RES+) or down (to SET-) to the desired speed.

OQLE055137

⚠ CAUTION

The "---" indicator will blink if there is a problem with speed limit control system.

If this occurs, we recommend that the system be checked by an authorized Kia dealer.

LANE KEEPING ASSIST SYSTEM (LKAS) (IF EQUIPPED)

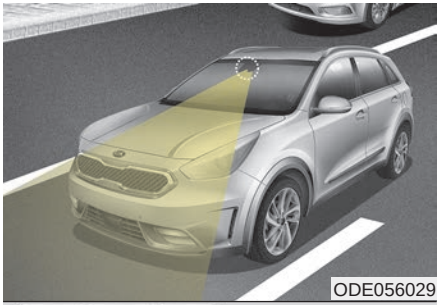
ODE056029

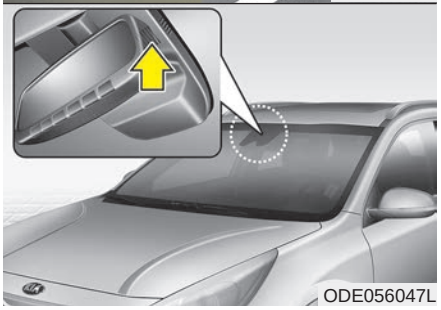
ODE056047L

The Lane Keeping Assist System detects lane markers on the road, and assists the driver's steering to help keep the vehicle between lanes.

When the system detects the vehicle straying from its lane, it alerts the driver with a visual and audible warning, while applying a slight counter-steering torque, trying to prevent the vehicle from moving out of its lane.

⚠ WARNING

- **The steering wheel is not continuously controlled so if the vehicle speed is very fast when leaving a lane the vehicle may not be controlled by the system.**
- **It is the responsibility of the driver to drive safely.**
- **Do not steer the steering wheel suddenly when the steering wheel is being assisted by the system.**

(Continued)

(Continued)

- **LKAS prevents the driver from moving out of the lane unintentionally by assisting the driver's steering. However, the driver should not solely rely on the system but always pay attention on the steering wheel to stay in the lane.**
- **Always check the road condition and surroundings and be cautious when the system cancels, does not operate or malfunctions.**
- **Do not place any accessories, stickers or tint the windshield near the rearview mirror.**
- **The system detects lane markers and controls the steering wheel by a camera, therefore, if the lane markers are hard to detect, the system may not work properly.**

  Please refer to "Driver's Attention".

(Continued)

(Continued)

- **Do not remove any LKAS parts or apply impact.**
- **Do not place objects on the dashboard that reflects light such as mirrors, white paper, etc. The system may malfunction if the sunlight is reflected.**
- **Loud audio sounds may interfere with the passenger from hearing warning chimes.**
- **Always have your hands on the steering wheel while the LKAS system is activated. If you continue to drive with your hands off the steering wheel after the "Hand on" warning, the system will turn off automatically.**
- **If you drive very fast, the vehicle may stray out of the lane. Always be cautious when using the system.**
- **When you tow the trailer, make sure that you turn off LKAS function.**

LKAS operation

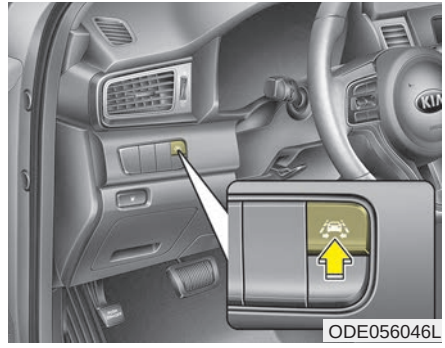

- To turn on the LKAS, push the button with the ignition switch in the ON position.
- The LKAS indicator (green) will illuminate.
- To turn off the system, press the button again. The indicator turns off.

- LKAS indicator
  - green : LKAS
  - white : LDWS
  - yellow : FAIL

LKAS activation

ODE056098L

- The LKAS screen will appear on the LCD display if the system is activated.
- When both lanes are detected and all the conditions to activate the LKAS are satisfied, the steering wheel will be controlled (green steering wheel indicator will illuminate).

⚠ WARNING

The Lane Keeping Assist System is a system to prevent the driver from leaving the lane. However, the driver should not solely rely on the system but always check the road conditions when driving.

■ Lane undetected

■ Lane detected

ODE056070L/ODE056098L

- If the system detects a lane, the color changes from gray to white.
- If the system detects the left lane, the left lane color will change from gray to white.
- If the system detects the right lane, the right lane color will change from gray to white.
- Both lanes must be detected for the system to fully activate.
- If only one of the lane is detected, the system will warn (warning beep and blinking yellow lane) the driver when the driver crosses the detected lane.

Warning

■ Left lane ■ Right lane

ODE056096L/ODE056097L

- If you cross a lane, the lane you cross will blink (yellow) and symbol will blink green on LCD with an audible warning during max 3 seconds.
- If the steering wheel appears, the system will control the vehicle's steering to prevent the vehicle from crossing the lane.

■ Left lane ■ Right lane

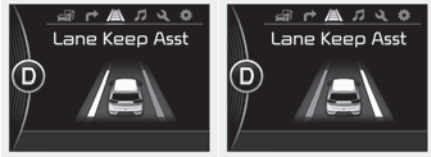

ODE056071L/ODE056073L

- If all the conditions to activate LKAS are not satisfied, the system will convert to LDWS and warn the driver only when the driver crosses the lane markers.

ODE056099L

- If the driver takes one's hands off the steering wheel while the LKAS is activated, the system will warn the driver after several seconds with a visual and audible warning.

⚠ WARNING

The warning message may appear late according to road conditions. Therefore, always have your hands on the steering wheel while driving.

If the driver still does not have one's hand on the steering wheel after several seconds, LKAS does not activate.

While LKAS deactivation, if the driver have one's hand on the steering wheel, LKAS activate again.

⚠ WARNING

- **The driver is responsible for accurate steering.**
- **Turn off the system and drive the vehicle personally in below situations.**
  - **In bad weather**
  - **In bad road condition**
  - **When the steering wheel needs to be controlled by the driver frequently.**

✻ NOTICE

- **Even though the steering is assisted by the system, the driver may control the steering.**
- **The steering wheel may feel heavier when the steering wheel is assisted by the system than when it is not.**

The system will be cancelled when:

- Vehicle speed is below 55km/h (34.2mph) and over 180 Km (111.8 mph).
- Only one lane is detected.
- Always turn on the turn signal to change lanes. If you change lanes without the turn signal on, the steering wheel might be controlled.
- The hazard warning light is on.
- The width of the lane is below 2.6 m and over 4.5 m.
- ESC(Electronic Stability Control) and VSM(Vehicle stability management) are activated.
- When the system is on or after changing a lane, drive in the middle of the lane. If not, the system will not provide the steering assist function.
- The steering will not be assisted when you drive fast on a sharp curve.
- The steering will not be assisted when you change lanes fast.
- The steering will not be assisted when you brake suddenly.

DRIVER'S ATTENTION

The driver must be cautious in the below situations for the system may not assist the driver and may not work properly.

- **The lane is not visible due to snow, rain, stain, a puddle or many other things.**
- **The brightness of the outside changes suddenly such as passing through a tunnel.**
- **Not turning on the headlight or the light is weak even at night or in a tunnel.**
- **Difficult to distinguish the color of the lane marker from the road.**
- **Driving on a steep grade or a curve.**
- **Light reflects from the water on the road such as sunlight, streetlight or the light of oncoming vehicles.**
- **The lens or windshield is stained with foreign matter.**
- **The sensor cannot detect the lane because of fog, heavy rain or heavy snow.**
- **The surrounding of the inside rear view mirror temperature is high due to direct light.**

(Continued)

(Continued)

- **The lane is very wide or narrow.**
- **The lane marker is damaged or indistinct.**
- **The shadow is on the lane marker by a median strip.**
- **There is a mark similar to a lane marker.**
- **There is a boundary structure.**
- **The distance from vehicle ahead is very short or the vehicle ahead drives hiding the lane marker.**
- **The vehicle shakes heavily.**
- **The lane number increases or decreases or the lane marker are crossing complicatedly.**
- **Placing something on the dashboard.**
- **Driving with the sun in front of you.**
- **Driving in areas under construction.**
- **The lane marker is more than two.**
- **The lane marker in a tunnel is hard to distinguish due to dust or grease.**
- **The lane marker is hard to distinguish after raining at night.**
- **The lane marker is hard to distinguish due to dust.**

(Continued)

(Continued)

- **EPS (Electronic Power Steering) is not operational.**
- **Some objects are attached in steering wheel.**
- **The windshield is fogged by humid air in the vehicle.**
- **The distance from the vehicle ahead is very short or the vehicle ahead drives covering the lane line.**
- **The lane line is merged or divided.**
- **Driving through a toll plaza or toll gate.**
- **Driving on uneven surface.**
- **An object on roadside which may resemble road markers.**

LKAS malfunction

ODE056100L

- If there is a problem with the system a message will appear. If the problem continues the LKAS fail indicator will illuminate.

LKAS fail indicator

■ Type A

ODE056100L

■ Type B

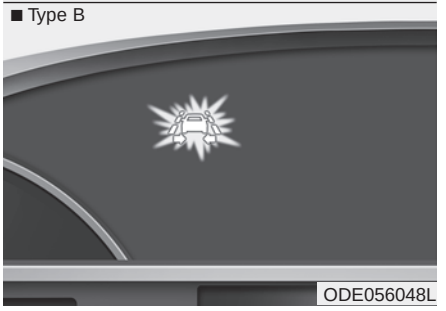

ODE056048L

The LKAS fail indicator (yellow) will illuminate with an audible warning if the LKAS is not working properly. We recommend that you contact an authorized Kia dealer.

When there is a problem with the system do one of the following:

- Turn the system on after turning the engine off and on again.
- Check if the ignition switch is in the ON position.
- Check if the system is affected by the weather. (ex: fog, heavy rain, etc.)
- Check if there is foreign matter on the camera lens

If the problem is not solved, we recommend that the system be checked by an authorized Kia dealer.

LKAS function change

The driver can change LKAS to Lane Departure Warning System (LDWS) or change the LKAS mode between Standard LKA and Active LKA from the User Settings Mode on the LCD display. The driver can choose them by placing the ignition switch to the ON position and by selecting ‘User Settings’, ‘Driving Assist’, and ‘Lane Keeping Assist System’.

The system is automatically set to Standard LKA.

Lane Departure Warning system (LDWS)

- The system can be converted to LKA to LDW at the User setting mode.
- Refer to User setting in section 4.
- LDWS alerts the driver with a visual and audible warning when the system detects the vehicle straying from its lane.
- If the LDWS is operating the indicator yellow/white will illuminate.
- The steering wheel will not be controlled.

Standard LKA

- LKAS only starts intervention when the vehicle is predicted to cross the line.
- It's useful to a driver who dislikes frequent intervention by LKAS
- LDW is generated when the vehicle is about to cross the line.

Active LKA

- LKAS operates for a vehicle to keep the region of lane center more efficiently.
- The steering assistance is activated more frequently and earlier than standard LKA.
- LDW is generated when the vehicle is about to cross the line.

BLIND SPOT DETECTION SYSTEM (IF EQUIPPED)

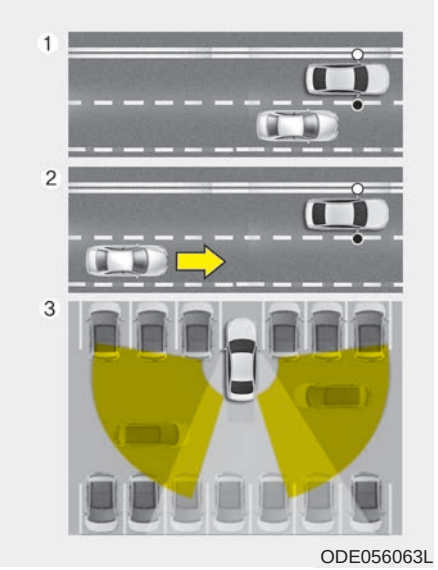

ODE056063L

The Blind spot detection system uses a radar sensor to alert the driver while driving.

It senses the rear side territory of the vehicle and provides information to the driver.

① Blind spot detection

Warning range is dependent on your vehicle speed. However, if the speed of your vehicle is faster by 10km/h or more than other nearby vehicles, the warning is not operated.

② Lane change assist

When vehicles are approaching to your vehicle at high speed, the warning is operated.

③ Rear cross traffic alert

When your vehicle moves backward, the sensor detects approaching vehicles to the left or right side direction and warning is operated.

⚠ WARNING

- **Always check the road condition while driving for unexpected situations even though the Blind spot detection system is operating.**
- **Blind spot detection system is a system made for convenience. Do not solely rely on the system but always pay attention to drive safely.**

Blind spot detection / Lane change assist

Operating conditions

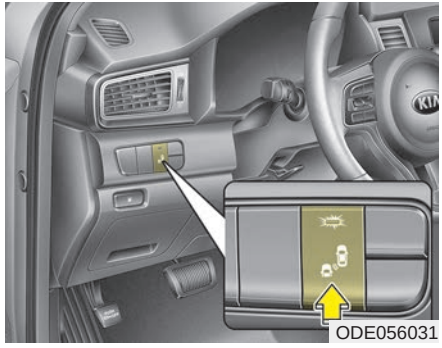
ODE056031

The indicator on the switch will illuminate when the Blind spot detection system switch is pressed with the ignition switch ON. If the vehicle speed exceeds 30 km/h (18.6 mph), the system will activate.

If you press the switch again, the switch indicator and system will be turned off.

If the ignition switch is turned OFF and ON the system returns to the previous state.

When the system is not used turn the system off by pressing the switch.

When the system is turned on the warning light will illuminate for 3 seconds on the outside rearview mirror.

Warning type

The system will activate when:

1. The system is on
2. Vehicle speed is above 30 km/h (18.6 mph)
3. Other vehicles are detected in the rear side

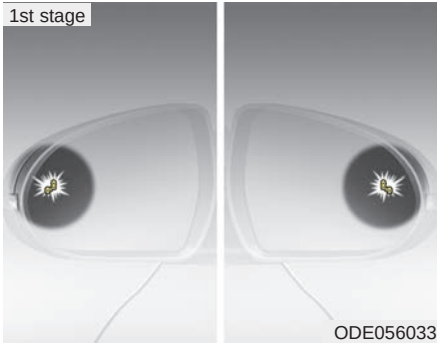

ODE056033

If a vehicle is detected within the boundary of the system, a warning light will illuminate on the outside rearview mirror.

If the detected vehicle is not in detection range, the warning will be turned off.

The second stage alarm will activate when:

1. The first stage alert is on
2. The turn signal is on to change a lane

When the second stage alert is activated, a warning light will be blinking on the outside rearview mirror and an alarm will sound.

If you move the turn signal switch to origin position, the second stage alert will be deactivated.

- The second stage alarm can be deactivated.

- To activate the alarm:

  Go to the User Settings Mode → Sound and select Blind Spot Detection Sound on the LCD display.

- To deactivate the alarm:

  Go to the User Settings Mode → Sound and deselect Blind Spot Detection Sound on the LCD display.

⚠ CAUTION

The alarm function helps alert the driver. Deactivate this function only when it is necessary

Detecting sensor

The sensors are located inside the rear bumper.

Always keep the rear bumper clean for the system to work properly.

Warning message

The message **(“Blind Spot Detection disabled temporarily”)** will appear to notify the driver if there are foreign substances on the rear bumper or it is hot near the rear bumper. The light on the switch and the system will be turned off automatically.

Remove the foreign substance on the rear bumper.

After the foreign substance is removed, if you drive for approximately 10 minutes, the system will work normally.

If the system does not work normally even though the foreign substance is removed, take your vehicle to an authorized Kia dealer and have the system checked.

It is possible to get the message with no foreign substance on the rear bumper, for example, when driving in sparse rural or open area, such as desert, where there is insufficient data for operation.

This message may also activate during heavy rain or due to road spray.

In this case, the vehicle does not need service.

If the system does not work properly, a warning message **(“Check BSD System”)** will appear and the light on the switch will turn off. The system will turn off automatically.

We recommend you to have the system checked by an authorized Kia dealer.

Rear cross traffic alert

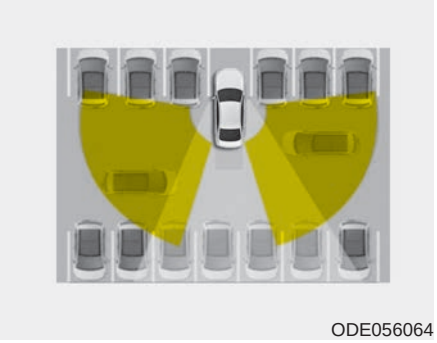

ODE056064

When your vehicle moves backwards from a parking position, the sensor detects approaching vehicles to the left or right side direction and gives information to the driver.

Operating conditions

- Go to the User Settings Mode → Driving Assist → Rear Collision Warning and select "Rear Cross Traffic Alert" on the LCD display. The system will turn on and stand by to be activated.
- Select Rear cross traffic alert again, to turn the system off.
- If the vehicle is turned off and on again, the Rear cross traffic alert system will return to the state right before the vehicle was turned off. Turn the Rear cross traffic alert system off when not in use.
- The system is operated when the vehicle speed is below 10km/h with the shift lever in R (Reverse).
- The Rear cross traffic alert detection range is 0.5m~20m based on side direction. If an approaching vehicle speed is 4 km/h~36 km/h in detection range, The warning is on. However, the system sensing range is different based on conditions. Always pay attention to surrounding.

Warning type

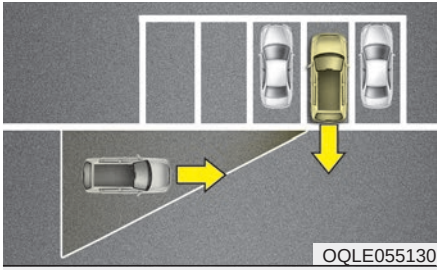

OQLE055130

ODE056091L

ODE056092L

- If an approaching vehicle detected by sensors, the warning is chime and the warning light will blink on the outside rearview mirror.
- If the detected vehicle is out of detection range, moving away in the opposite direction or moving slow, the warning is cancelled.
- The system may not be operating properly due to other factors or circumstances, so always pay attention to your surrounding.

❊ If the bumper on either side is blocked by a barrier or vehicles, the system sensing ability may be deteriorated.

⚠ WARNING

- **The warning light on the outside rearview mirror will illuminate whenever a vehicle is detected at the rear side by the system.**

  To avoid accidents, do not focus only on the warning light and neglect to see the surrounding of the vehicle.
- **Drive safely even though the vehicle is equipped with a Blind spot detection system. Do not solely rely on the system but check for yourself before changing lanes.**

  The system may not alert the driver in some conditions so always check the surroundings while driving.

⚠ CAUTION

- ***The system may not work properly if the bumper has been replaced or if a repair work has been done near the sensor.***
- ***The detection area differs according to the roads width. If the road is narrow the system may detect other vehicles in the second next lane.***
- ***On the contrary, if the road is very wide the system may not detect other vehicles in the next lane.***
- ***The system might be turned off due to strong electromagnetic waves.***

Non-operating condition

Outside rearview mirror may not alert the driver when:

- The outside rearview mirror housing is damaged or covered with debris.
- The window is covered with debris.
- The windows are severely tinted.

Driver's Attention

The driver must be cautious in the below situations, because the system may not detect other vehicles or objects in certain circumstances.

- **The vehicle drives on a curved road or through a tollgate.**
- **The sensor is polluted with rain, snow, mud, etc.**
- **The rear bumper, in which the sensor is located, is covered or blocked with a foreign matter such as a sticker, a bumper guard, a bicycle stand, etc.**
- **The rear bumper is damaged, or the sensor is out of the original default position.**
- **The vehicle height gets lower or higher due to heavy loading in a tailgate, abnormal tire pressure, etc.**
- **The vehicle drives in a bad weather such as heavy rain or snow.**

(Continued)

(Continued)

- **There is a fixed object near the vehicle, such as a guardrail.**
- **A big vehicle is near such as a bus or truck.**
- **A motorcycle or bicycle is near.**
- **A flat trailer is near.**
- **If the vehicle has started at the same time as the vehicle next to you and has accelerated.**
- **When the other vehicle passes at a very fast speed.**
- **While changing lanes.**
- **When going down or up a steep, uneven road.**
- **When the other vehicle approaches very close.**
- **When a trailer or carrier is installed.**
- **When the temperature of the rear bumper is very high or low.**

(Continued)

(Continued)

- **When the sensors are blocked by other vehicles, walls or parking-lot pillars.**
- **When the detected vehicle also moves back, as your vehicle drives back.**
- **If there are small things like shopping cart and baby carriage.**
- **If there is low height vehicle like sport vehicle.**
- **When other vehicles are close to your vehicle.**
- **When the vehicle in the next lane moves two lanes away from you OR when the vehicle two lanes away moves to the next lane from you.**
- **When driving through a narrow road with many plants.**
- **When driving on wet surface.**

ECONOMICAL OPERATION

Your vehicle's fuel economy depends mainly on your style of driving, where you drive and when you drive.

Each of these factors affects how many kilometers (miles) you can get from a liter (gallon) of fuel. To operate your vehicle as economically as possible, use the following driving suggestions to help save money in both fuel and repairs:

- Drive smoothly. Accelerate at a moderate rate. Do not make "jack-rabbit" starts or full-throttle shifts and maintain a steady cruising speed. Do not race between stoplights. Try to adjust your speed to the traffic so you do not have to change speeds unnecessarily. Avoid heavy traffic whenever possible. Always maintain a safe distance from other vehicles so you can avoid unnecessary braking. This also reduces brake wear.
- Drive at a moderate speed. The faster you drive, the more fuel your vehicle uses. Driving at a moderate speed, especially on the highway, is one of the most effective ways to reduce fuel consumption.
- Do not "ride" the brake or clutch pedal. This can increase fuel consumption and also increase wear on these components. In addition, driving with your foot resting on the brake pedal may cause the brakes to overheat, which reduces their effectiveness and may lead to more serious consequences.
- Take care of your tires. Keep them inflated to the recommended pressure. Incorrect inflation, either too much or too little, results in unnecessary tire wear. Check the tire pressures at least once a month.
- Be sure that the wheels are aligned correctly. Improper alignment can result from hitting curbs or driving too fast over irregular surfaces. Poor alignment causes faster tire wear and may also result in other problems as well as greater fuel consumption.
- Keep your vehicle in good condition. For better fuel economy and reduced maintenance costs, maintain your vehicle in accordance with the maintenance schedule in section 8. If you drive your vehicle in severe conditions, more frequent maintenance is required (see section 8 for details).
- Keep your vehicle clean. For maximum service, your vehicle should be kept clean and free of corrosive materials. It is especially important that mud, dirt, ice, etc. not be allowed to accumulate on the underside of the vehicle. This extra weight can result in increased fuel consumption and also contribute to corrosion.
- Travel lightly. Do not carry unnecessary weight in your vehicle. Weight reduces fuel economy.
- Do not let the engine idle longer than necessary. If you are waiting (and not in traffic), turn off your engine and restart only when you're ready to go.

- Remember, your vehicle does not require extended warm-up. After the engine has started, allow the engine to run for 10 to 20 seconds prior to placing the vehicle in gear. In very cold weather, however, give your engine a slightly longer warm-up period.
- Do not "lug" or "over-rev" the engine. Lugging is driving too slowly in too high a gear resulting engine bucking. If this happens, shift to a lower gear. Over-revving is racing the engine beyond its safe limit. This can be avoided by shifting at the recommended speeds.
- Use your air conditioning sparingly. The air conditioning system is operated by engine power so your fuel economy is reduced when you use it.
- Open windows at high speeds can reduce fuel economy.
- Fuel economy is less in crosswinds and headwinds. To help offset some of this loss, slow down when driving in these conditions.

Keeping a vehicle in good operating condition is important both for economy and safety. Therefore, we recommend that the system be serviced by an authorized Kia dealer.

⚠ WARNING - Engine off during motion

Never turn the engine off to coast down hills or anytime the vehicle is in motion. The power steering and power brakes will not function properly without the engine running. Instead, keep the engine on and downshift to an appropriate gear for engine braking effect. In addition, turning off the ignition while driving could engage the steering wheel lock (if equipped) resulting in loss of vehicle steering which could cause serious injury or death.

SPECIAL DRIVING CONDITIONS

Hazardous driving conditions

When hazardous driving conditions are encountered such as water, snow, ice, mud, sand, or similar hazards, follow these suggestions:

- Drive cautiously and allow extra distance for braking.
- Avoid sudden braking or steering.
- When braking with non-ABS brakes pump the brake pedal with a light up-and-down motion until the vehicle is stopped.

⚠ WARNING - ABS

Do not pump the brake pedal on a vehicle equipped with ABS.

- If stalled in snow, mud, or sand, use second gear. Accelerate slowly to avoid spinning the drive wheels.
- Use sand, rock salt, tire chains, or other non-slip material under the drive wheels to provide traction when stalled in ice, snow, or mud.

⚠ WARNING - Downshifting

Downshifting with an dual clutch transaxle, while driving on slippery surfaces can cause an accident. The sudden change in tire speed could cause the tires to skid. Be careful when downshifting on slippery surfaces.

Reducing the risk of a rollover

This multi-purpose passenger vehicle is defined as a Sports Utility Vehicle (SUV).

SUV's have higher ground clearance and a narrower track to make them capable of performing in a wide variety of road applications. Specific design characteristics give them a higher center of gravity than ordinary vehicles. An advantage of the higher ground clearance is a better view of the road, which allows you to anticipate problems. They are not designed for cornering at the same speeds as conventional passenger vehicles. Due to this risk, driver and passengers are strongly recommended to buckle their seat belts. In a rollover crash, an unbelted person is more likely to die than a person wearing a seat belt. There are steps that a driver can make to reduce the risk of a rollover. If at all possible, avoid sharp turns or abrupt maneuvers, do not load your roof rack with heavy cargo, and never modify your vehicle in any way.

⚠ WARNING - Rollover

As with other Sports Utility Vehicle (SUV), failure to operate this vehicle correctly may result in loss of control, an accident or vehicle rollover.

- **Utility vehicles have a significantly higher rollover rate than other types of vehicles.**
- **Specific design characteristics (higher ground clearance, narrower track, etc.) give this vehicle a higher center of gravity than ordinary vehicles.**
- **A SUV is not designed for cornering at the same speeds as conventional vehicles.**
- **Avoid sharp turns or abrupt maneuvers.**
- **In a rollover crash, an unbelted person is significantly more likely to die than a person wearing a seat belt. Make sure everyone in the vehicle is properly buckled up.**

⚠ WARNING

Your vehicle is equipped with tires designed to provide safe ride and handling capability. Do not use a size and type of tire and wheel that is different from the one that is originally installed on your vehicle. It can affect the safety and performance of your vehicle, which could lead to steering failure or rollover and serious injury. When replacing the tires, be sure to equip all four tires with the tire and wheel of the same size, type, tread, brand and load-carrying capacity. If you nevertheless decide to equip your vehicle with any tire/wheel combination not recommended by Kia for off road driving, you should not use these tires for highway driving.

Rocking the vehicle

If it is necessary to rock the vehicle to free it from snow, sand, or mud, first turn the steering wheel right and left to clear the area around your front wheels. Then, shift back and forth between R (Reverse) and any forward gear in vehicles equipped with an Dual clutch transmission. Do not race the engine, and spin the wheels as little as possible. If you are still stuck after a few tries, have the vehicle pulled out by a tow vehicle to avoid engine overheating and possible damage to the transaxle.

⚠ CAUTION

Prolonged rocking may cause engine over-heating, transaxle damage or failure, and tire damage.

⚠ WARNING - Spinning tires

Do not spin the wheels, especially at speeds more than 56 km/h (35 mph). Spinning the wheels at high speeds when the vehicle is stationary could cause a tire to overheat which could result in tire damage that may injure bystanders.

✻ NOTICE

The ESC system should be turned OFF prior to rocking the vehicle.

⚠ WARNING

If your vehicle becomes stuck in snow, mud, sand, etc., then you may attempt to rock the vehicle free by moving it forward and backward. Do not attempt this procedure if people or objects are anywhere near the vehicle. During the rocking operation the vehicle may suddenly move forward or backward as it becomes unstuck, causing injury or damage to nearby people or objects.

Smooth cornering

Avoid braking or gear changing in corners, especially when roads are wet. Ideally, corners should always be taken under gentle acceleration. If you follow these suggestions, tire wear will be held to a minimum.

Driving at night

Because night driving presents more hazards than driving in the daylight, here are some important tips to remember:

- Slow down and keep more distance between you and other vehicles, as it may be more difficult to see at night, especially in areas where there may not be any street lights.
- Adjust your mirrors to reduce the glare from other driver's headlights.
- Keep your headlights clean and properly aimed on vehicles not equipped with the automatic headlight aiming feature. Dirty or improperly aimed headlights will make it much more difficult to see at night.
- Avoid staring directly at the headlights of oncoming vehicles. You could be temporarily blinded, and it will take several seconds for your eyes to readjust to the darkness.

Driving in the rain

Rain and wet roads can make driving dangerous, especially if you’re not prepared for the slick pavement. Here are a few things to consider when driving in the rain:

- A heavy rainfall will make it harder to see and will increase the distance needed to stop your vehicle, so slow down.
- Keep your windshield wiping equipment in good shape. Replace your windshield wiper blades when they show signs of streaking or missing areas on the windshield.
- If your tires are not in good condition, making a quick stop on wet pavement can cause a skid and possibly lead to an accident. Be sure your tires are in good shape.
- Turn on your headlights to make it easier for others to see you.
- Driving too fast through large puddles can affect your brakes. If you must go through puddles, try to drive through them slowly.
- If you believe you may have gotten your brakes wet, apply them lightly while driving until normal braking operation returns.

Driving in flooded areas

Avoid driving through flooded areas unless you are sure the water is no higher than the bottom of the wheel hub. Drive through any water slowly. Allow adequate stopping distance because brake performance may be affected.

After driving through water, dry the brakes by gently applying them several times while the vehicle is moving slowly.

Driving off-road

Drive carefully off-road because your vehicle may be damaged by rocks of roots of trees. Become familiar with the off-road conditions where you are going to drive before you begin driving.

Highway driving

Tires

Adjust the tire inflation pressures to specification. Low tire inflation pressures will result in overheating and possible failure of the tires.

Avoid using worn or damaged tires which may result in reduced traction or tire failure.

✻ NOTICE

Never exceed the maximum tire inflation pressure shown on the tires.

⚠ WARNING

- **Underinflated or overinflated tires can cause poor handling, loss of vehicle control, and sudden tire failure leading to accidents, injuries, and even death. Always check the tires for proper inflation before driving. For proper tire pressures, refer to section 9, "Tires and wheels".**
- **Driving on tires with no or insufficient tread is dangerous. Worn-out tires can result in loss of vehicle control, collisions, injury, and even death. Worn-out tires should be replaced as soon as possible and should never be used for driving. Always check the tire tread before driving your vehicle. For further information and tread limits, refer to section 8, "Tires and wheels".**

Fuel, engine coolant and engine oil

High speed travel consumes more fuel than urban motoring. Do not forget to check both engine coolant and engine oil.

Drive belt

A loose or damaged drive belt may result in overheating of the engine.

WINTER DRIVING

Severe weather conditions in the winter result in greater wear and other problems. To minimize the problems of winter driving, you should follow these suggestions:

❊ Snow tires and tire chains for the national language (Icelandic, Bulgarian) see the Appendix to chapter 10.

Snowy or Icy conditions

To drive your vehicle in deep snow, it may be necessary to use snow tires or to install tire chains on your tires. If snow tires are needed, it is necessary to select tires equivalent in size and type of the original equipment tires. Failure to do so may adversely affect the safety and handling of your vehicle. Furthermore, speeding, rapid acceleration, sudden brake applications, and sharp turns are potentially very hazardous practices.

During deceleration, use engine braking to the fullest extent. Sudden brake applications on snowy or icy roads may cause skids to occur. You need to keep sufficient distance between the vehicle in operation in front and your vehicle. Also, apply the brake gently. It should be noted that installing tire chains on the tire will provide a greater driving force, but will not prevent side skids.

❊ NOTICE

Tire chains are not legal in all countries. Check the country laws before fitting tire chains.

Snow tires

If you mount snow tires on your vehicle, make sure they are radial tires of the same size and load range as the original tires. Mount snow tires on all four wheels to balance your vehicle's handling in all weather conditions. Keep in mind that the traction provided by snow tires on dry roads may not be as high as your vehicle's original equipment tires. You should drive cautiously even when the roads are clear. Check with the tire dealer for maximum speed recommendations.

⚠ WARNING - Snow tire size

Snow tires should be equivalent in size and type to the vehicle's standard tires. Otherwise, the safety and handling of your vehicle may be adversely affected.

Do not install studded tires without first checking local, state and municipal regulations for possible restrictions against their use.

Tire chains

ODE056062

Since the sidewalls of radial tires are thinner, they can be damaged by mounting some types of snow chains on them. Therefore, the use of snow tires is recommended instead of snow chains. Do not mount tire chains on vehicles equipped with aluminum wheels; snow chains may cause damage to the wheels. If snow chains must be used, use wire-type chains with a thickness of less than 12mm (0.47in). Damage to your vehicle caused by improper snow chain use is not covered by your vehicle manufacturers warranty.

When using tire chains, install tire chains only on the front tires.

⚠ CAUTION

- ***Make sure the snow chains are the correct size and type for your tires. Incorrect snow chains can cause damage to the vehicle body and suspension and may not be covered by your vehicle manufacturer warranty. Also, the snow chain connecting hooks may be damaged from contacting vehicle components causing the snow chains to come loose from the tire. Make sure the snow chains are SAE class "S" certified.***
- ***Always check chain installation for proper mounting after driving approximately 0.5 to 1 km (0.3 to 0.6 miles) to ensure safe mounting. Retighten or remount the chains if they are loose.***
- ***If your vehicle has 18 inch tires, do not use tire chains. They can damage your vehicle (wheel, suspension and body).***

Chain installation

When installing chains, follow the manufacturer's instructions and mount them as tightly as you can. Drive slowly with chains installed. If you hear the chains contacting the body or chassis, stop and tighten them. If they still make contact, slow down until it stops. Remove the chains as soon as you begin driving on cleared roads.

⚠ WARNING - Mounting chains

When mounting snow chains, park the vehicle on level ground away from traffic. Turn on the vehicle Hazard Warning flashers and place a triangular emergency warning device behind the vehicle if available. Always place the vehicle in P (Park), apply the parking brake and turn off the engine before installing snow chains.

⚠ WARNING - Tire chains

- **The use of chains may adversely affect vehicle handling.**
- **Do not exceed 30 km/h (20 mph) or the chain manufacturer's recommended speed limit, whichever is lower.**
- **Drive carefully and avoid bumps, holes, sharp turns, and other road hazards, which may cause the vehicle to bounce.**
- **Avoid sharp turns or locked-wheel braking.**

⚠ CAUTION

- ***Chains that are the wrong size or improperly installed can damage your vehicle's brake lines, suspension, body and wheels.***
- ***Stop driving and retighten the chains any time you hear them hitting the vehicle.***

Use high quality ethylene glycol coolant

Your vehicle is delivered with high quality ethylene glycol coolant in the cooling system. It is the only type of coolant that should be used because it helps prevent corrosion in the cooling system, lubricates the water pump and prevents freezing. Be sure to replace or replenish your coolant in accordance with the maintenance schedule in section 8. Before winter, have your coolant tested to assure that its freezing point is sufficient for the temperatures anticipated during the winter.

Check battery and cables

Winter puts additional burdens on the battery system. Visually inspect the battery and cables as described in section 8. We recommend that the level of charge in your battery be checked by an authorized Kia dealer.

Change to "winter weight" oil if necessary

In some climates it is recommended that a lower viscosity "winter weight" oil be used during cold weather. See section 9 for recommendations. If you aren't sure what weight oil you should use, we recommend that you consult an authorized Kia dealer.

Check spark plugs and ignition system

Inspect your spark plugs as described in section 8 and replace them if necessary. Also check all ignition wiring and components to be sure they are not cracked, worn or damaged in any way.

To keep locks from freezing

To keep the locks from freezing, squirt an approved de-icer fluid or glycerine into the key opening. If a lock is covered with ice, squirt it with an approved de-icing fluid to remove the ice. If the lock is frozen internally, you may be able to thaw it out by using a heated key. Handle the heated key with care to avoid injury.

Use approved window washer anti-freeze in system

To keep the water in the window washer system from freezing, add an approved window washer anti-freeze solution in accordance with instructions on the container. Window washer anti-freeze is available from an authorized Kia dealer and most auto parts outlets. Do not use engine coolant or other types of anti-freeze as these may damage the paint finish.

Don't let your parking brake freeze

Under some conditions your parking brake can freeze in the engaged position. This is most likely to happen when there is an accumulation of snow or ice around or near the rear brakes or if the brakes are wet. If there is a risk the parking brake may freeze, apply it only temporarily while you put the shift lever in P (Dual clutch transmission) and block the rear wheels so the vehicle cannot roll. Then release the parking brake.

Don't let ice and snow accumulate underneath

Under some conditions, snow and ice can build up under the fenders and interfere with the steering. When driving in severe winter conditions where this may happen, you should periodically check underneath the vehicle to be sure the movement of the front wheels and the steering components is not obstructed.

Carry emergency equipment

Depending on the severity of the weather, you should carry appropriate emergency equipment. Some of the items you may want to carry include tire chains, tow straps or chains, flashlight, emergency flares, sand, shovel, jumper cables, window scraper, gloves, ground cloth, coveralls, blanket, etc.

TRAILER TOWING

If you are considering towing with your vehicle, you should first check with your country's Department of Motor Vehicles to determine their legal requirements.

Since laws vary the requirements for towing trailers, cars, or other types of vehicles or apparatus may differ. We recommend that you ask an authorized Kia dealer.

⚠ WARNING - Towing a trailer

If you don't use the correct equipment and/or drive improperly, you can lose control when you pull a trailer. For example, if the trailer is too heavy, the brakes may not work well - or even at all. You and your passengers could be seriously or fatally injured. Pull a trailer only if you have followed all the steps in this section.

⚠ WARNING - Weight limits

Before towing, make sure the total trailer weight, GCW (gross combination weight), GVW (gross vehicle weight), GAW (gross axle weight) and trailer tongue load are all within the limits.

✻ NOTICE - For Europe

- **The technically permissible maximum load on the rear axle(s) may be exceeded by not more than 15 % and the technically permissible maximum laden mass of the vehicle may be exceeded by not more than 10 % or 100 kg (220.4 lbs.), whichever value is lower.**
  In this case, do not exceed 100 km/h (62.1 mph) of vehicle speed.
- **When towing a trailer, the additional load imposed at the trailer coupling device may cause the rear tire maximum load ratings to be exceed, but not by more than 15 %. In such a case, do not exceed 100 km/h (62.1 mph) of vehicle speed, and the rear tire pressure should be inflated 20 kPa (0.2 bar) more than the tire pressure(s) as recommended for normal use (i.e. without a trailer attached.)**

⚠ CAUTION

Pulling a trailer improperly can damage your vehicle and result in costly repairs not covered by your warranty. To pull a trailer correctly, follow the advice in this section.

Your vehicle can tow a trailer. To identify what the vehicle trailering capacity is for your vehicle, you should read the information in “Weight of the trailer” that appears later in this section.

Remember that trailering is different than just driving your vehicle by itself. Trailering means changes in handling, durability, and fuel economy. Successful, safe trailering requires correct equipment, and it has to be used properly.

This section contains many time-tested, important trailering tips and safety rules. Many of these are important for your safety and that of your passengers. Please read this section carefully before you pull a trailer.

Load-pulling components such as the engine, transaxle, wheel assemblies, and tires are forced to work harder against the load of the added weight. The engine is required to operate at relatively higher speeds and under greater loads. This additional burden generates extra heat. The trailer also considerably adds wind resistance, increasing the pulling requirements.

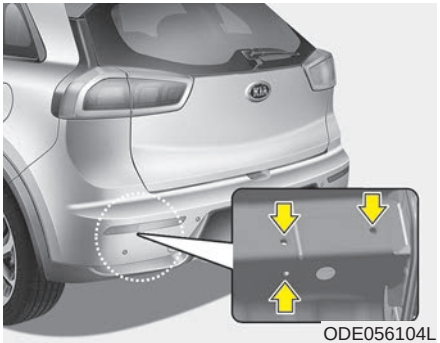

✻ **NOTICE - Location of trailer mounting**

The mounting hole for hitches are located on both sides of the underbody behind the rear tires.

Hitches

It's important to have the correct hitch equipment. Crosswinds, large trucks going by, and rough roads are a few reasons why you'll need the right hitch. Here are some rules to follow:

- Do you have to make any holes in the body of your vehicle when you install a trailer hitch? If you do, then be sure to seal the holes later when you remove the hitch.
- The bumpers on your vehicle are not intended for hitches. Do not attach rental hitches or other bumper-type hitches to them. Use only a frame-mounted hitch that does not attach to the bumper.
- A Kia accessory trailer hitch is available at an authorized Kia dealer.

Safety chains

You should always attach chains between your vehicle and your trailer. Cross the safety chains under the tongue of the trailer so that the tongue will not drop to the road if it becomes separated from the hitch.

Instructions about safety chains may be provided by the hitch manufacturer or by the trailer manufacturer. Follow the manufacturer's recommendation for attaching safety chains. Always leave just enough slack so you can turn with your trailer. And, never allow safety chains to drag on the ground.

Trailer brakes

If your trailer is equipped with a braking system, make sure it conforms to your country's regulations and that it is properly installed and operating correctly.

If your trailer weight exceeds the maximum allowed weight without trailer brakes, then the trailer will also require its own brakes as well. Be sure to read and follow the instructions for the trailer brakes so you'll be able to install, adjust and maintain them properly.

- Do not tap into or modify your vehicle's brake system.

⚠ WARNING - Trailer brakes

Do not use a trailer with its own brakes unless you are absolutely certain that you have properly set up the brake system. This is not a task for amateurs. Use an experienced, competent trailer shop for this work.

Driving with a trailer

Towing a trailer requires a certain amount of experience. Before setting out for the open road, you must get to know your trailer. Acquaint yourself with the feel of handling and braking with the added weight of the trailer. And always keep in mind that the vehicle you are driving is now a good deal longer and not nearly so responsive as your vehicle is by itself.

Before you start, check the trailer hitch and platform, safety chains, electrical connector(s), lights, tires and mirror adjustment. If the trailer has electric brakes, start your vehicle and trailer moving and then apply the trailer brake controller by hand to be sure the brakes are working. This lets you check your electrical connection at the same time.

During your trip, check occasionally to be sure that the load is secure, and that the lights and any trailer brakes are still working.

Following distance

Stay at least twice as far behind the vehicle ahead as you would when driving your vehicle without a trailer. This can help you avoid situations that require heavy braking and sudden turns.

Passing

You'll need more passing distance up ahead when you're towing a trailer. And, because of the increased vehicle length, you'll need to go much farther beyond the passed vehicle before you can return to your lane.

Backing up

Hold the bottom of the steering wheel with one hand. Then, to move the trailer to the left, just move your hand to the left. To move the trailer to the right, move your hand to the right. Always back up slowly and, if possible, have someone guide you.

Making turns

When you're turning with a trailer, make wider turns than normal. Do this so your trailer won't strike soft shoulders, curbs, road signs, trees, or other objects. Avoid jerky or sudden maneuvers. Signal well in advance.

Turn signals when towing a trailer

When you tow a trailer, your vehicle has to have a different turn signal flasher and extra wiring. The green arrows on your instrument panel will flash whenever you signal a turn or lane change. Properly connected, the trailer lights will also flash to alert other drivers you're about to turn, change lanes, or stop.

When towing a trailer, the green arrows on your instrument panel will flash for turns even if the bulbs on the trailer are burned out. Thus, you may think drivers behind you are seeing your signals when, in fact, they are not. It is important to check occasionally to be sure the trailer bulbs are still working. You must also check the lights every time you disconnect and then reconnect the wires.

Do not connect a trailer lighting system directly to your vehicle's lighting system. Use only an approved trailer wiring harness.

An authorized Kia dealer can assist you in installing the wiring harness.

⚠ WARNING

Failure to use an approved trailer wiring harness could result in damage to the vehicle electrical system and/or personal injury.

Driving on grades

Reduce speed and shift to a lower gear before you start down a long or steep downgrade. If you don't shift down, you might have to use your brakes so much that they would get hot and no longer operate efficiently.

On a long uphill grade, shift down and reduce your speed to around 70 km/h (45 mph) to reduce the possibility of engine and transaxle overheating.

If your trailer weighs more than the maximum trailer weight without trailer brakes and you have a dual clutch transmission, you should drive in D (Drive) when towing a trailer.

Operating your vehicle in D (Drive) when towing a trailer will minimize heat build up and extend the life of your transaxle.

⚠ CAUTION

- ***When towing a trailer on steep grades (in excess of 6%) pay close attention to the engine coolant temperature gauge to ensure the engine does not overheat.***

  If the needle of the coolant temperature gauge moves across the dial towards "H (HOT)", pull over and stop as soon as it is safe to do so, and allow the engine to idle until it cools down. You may proceed once the engine has cooled sufficiently.

- ***You must decide driving speed depending on trailer weight and uphill grade to reduce the possibility of engine and transaxle overheating.***

(Continued)

(Continued)

- ***When towing a trailer on steep grades, the clutch in the transmission could overheat.***

  When the clutch is overheated, the safe protection mode engages. If the safe protection mode engages, the gear position indicator on the cluster blinks with a chime sound.

  At this time, a warning message will appear on the LCD display and driving may not be smooth.

  If you ignore this warning, the driving condition may become worse.

  To return the normal driving condition, stop the vehicle on flat road and apply the foot brake for a few minutes before driving off.

Parking on hills

Generally, if you have a trailer attached to your vehicle, you should not park your vehicle on a hill. People can be seriously or fatally injured, and both your vehicle and the trailer can be damaged if unexpectedly roll down hill.

⚠ WARNING - Parking on a hill

Parking your vehicle on a hill with a trailer attached could cause serious injury or death, should the trailer break loose.

It can be very dangerous to hold your vehicle by applying accelerator on a hill.

However, if you ever have to park your trailer on a hill, here is how to do it:

1. Pull the vehicle into the parking space. Turn the steering wheel in the direction of the curb (left if headed down hill, right if headed up hill).
2. If the vehicle has a dual clutch transmission, place the car in P (Park).
3. Set the parking brake and shut off the vehicle.
4. Place chocks under the trailer wheels on the down hill side of the wheels.
5. Start the vehicle, hold the brakes, shift to neutral, release the parking brake and slowly release the brakes until the trailer chocks absorb the load.
6. Reapply the brakes, reapply the parking brake and shift the vehicle to P (Park) for dual clutch transmission.
7. Shut off the vehicle and release the vehicle brakes but leave the parking brake set.

⚠ WARNING - Parking brake

It can be dangerous to get out of your vehicle if the parking brake is not firmly set.

If you have left the engine running, the vehicle can move suddenly. You or others could be seriously or fatally injured.

When you are ready to leave after parking on a hill

1. With the dual clutch transmission in P (Park), apply your brakes and hold the brake pedal down while you:
   - Start your engine;
   - Shift into gear; and
   - Release the parking brake.
2. Slowly remove your foot from the brake pedal.
3. Drive slowly until the trailer is clear of the chocks.
4. Stop and have someone pick up and store the chocks.

Maintenance when trailer towing

Your vehicle will need service more often when you regularly pull a trailer. Important items to pay particular attention to include engine oil, transaxle fluid, axle lubricant and cooling system fluid. Brake condition is another important item to frequently check. Each item is covered in this manual, and the Index will help you find them quickly. If you're trailering, it is a good idea to review these sections before you start your trip.

Do not forget to also maintain your trailer and hitch. Follow the maintenance schedule that accompanied your trailer and check it periodically. Preferably, conduct the check at the start of each day's driving. Most importantly, all hitch nuts and bolts should be tight.

⚠ CAUTION

- ***Due to higher load during trailer usage, overheating might occur in hot days or during uphill driving. If the coolant gauge indicates overheating, switch off the air conditioner and stop the vehicle in a safe area to cool down the engine.***
- ***When towing check transaxle fluid more frequently.***
- ***If your vehicle is not equipped with an air conditioner, you should install a condenser fan to improve engine performance when towing a trailer.***

If you do decide to pull a trailer

Here are some important points if you decide to pull a trailer:

- Consider using a sway control. You can ask a hitch dealer about sway control.
- Do not do any towing with your car during its first 2,000 km (1,200 miles) in order to allow the engine to properly break in. Failure to heed this caution may result in serious engine or transaxle damage.
- When towing a trailer, we recommend that you consult an authorized Kia dealer on additional requirements such as a towing kit, etc.
- Always drive your vehicle at a moderate speed (less than 100 km/h (60 mph)).
- On a long uphill grade, do not exceed 70 km/h (45 mph) or the posted towing speed limit, whichever is lower.
- The chart contains important considerations that have to do with weight:

For Europe

Item		Kappa 1.6 GDI
		DCT
Maximum trailer weight kg (lbs.)	Unbraked	600 kg (1323 lbs.)
	Braked	1,300 kg (2,866 lbs.)
Technically permissible maximum static vertical load/mass on the coupling point kg (lbs.)		100 kg (220 lbs.)
Front axle to ball point of coupling device mm (inch)		3,415 mm (134 inch)
Rear axle to ball point of coupling device mm (inch)		715 mm (28 inch)
Maximum permissible overhang of the coupling point mm (inch)		910 mm (36 inch)

DCT : Dual clutch transmission

Weight of the trailer

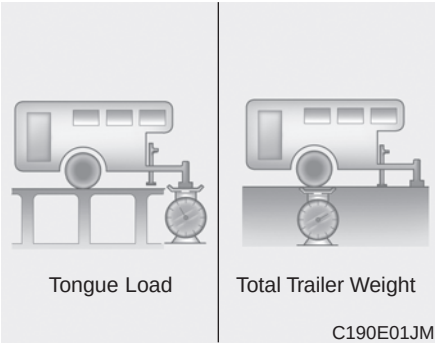

What is the maximum safe weight of a trailer? It should never weigh more than the maximum trailer weight with trailer brakes. But even that can be too heavy.

It depends on how you plan to use your trailer. For example, speed, altitude, road grades, outside temperature and how often your vehicle is used to pull a trailer are all important. The ideal trailer weight can also depend on any special equipment that you have on your vehicle.

Weight of the trailer tongue

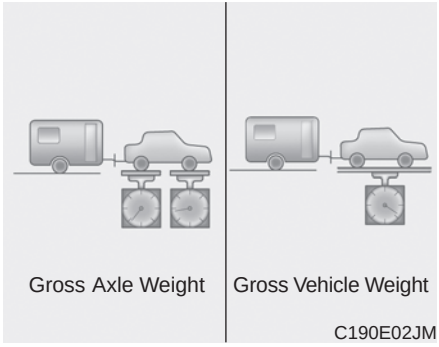

The tongue load of any trailer is an important weight to measure because it affects the total gross vehicle weight (GVW) of your vehicle. This weight includes the curb weight of the vehicle, any cargo you may carry in it, and the people who will be riding in the vehicle. And if you will tow a trailer, you must add the tongue load to the GVW because your vehicle will also be carrying that weight.

The trailer tongue should weigh a maximum of 10% of the total loaded trailer weight, within the limits of the maximum permissible trailer tongue load. After you've loaded your trailer, weigh the trailer and then the tongue, separately, to see if the weights are proper. If they aren’t, you may be able to correct them simply by moving some items around in the trailer.

⚠ WARNING - Trailer

- **Never load a trailer with more weight in the rear than in the front. The front should be loaded with approximately 60% of the total trailer load; the rear should be loaded with approximately 40% of the total trailer load.**
- **Never exceed the maximum weight limits of the trailer or trailer towing equipment. Improper loading can result in damage to your vehicle and/or personal injury. Check weights and loading at a commercial scale or highway patrol office equipped with scales.**
- **An improperly loaded trailer can cause loss of vehicle control.**

✻ NOTICE

With increasing altitude the engine performance decreases. From 1,000m above sea level and for every 1,000m thereafter 10% of vehicle/trailer weight (trailer weighter + gross vehicle weight) must be deducted.

VEHICLE WEIGHT

This section will guide you in the proper loading of your vehicle and/or trailer, to keep your loaded vehicle weight within its design rating capability, with or without a trailer. Properly loading your vehicle will provide maximum return of the vehicle design performance. Before loading your vehicle, familiarize yourself with the following terms for determining your vehicle's weight ratings, with or without a trailer, from the vehicle's specifications and the certification label:

Base curb weight

This is the weight of the vehicle including a full tank of fuel and all standard equipment. It does not include passengers, cargo, or optional equipment.

Vehicle curb weight

This is the weight of your new vehicle when you picked it up from your dealer plus any aftermarket equipment.

Cargo weight

This figure includes all weight added to the Base Curb Weight, including cargo and optional equipment.

GAW (Gross axle weight)

This is the total weight placed on each axle (front and rear) - including vehicle curb weight and all payload.

GAWR (Gross axle weight rating)

This is the maximum allowable weight that can be carried by a single axle (front or rear). These numbers are shown on the certification label.

The total load on each axle must never exceed its GAWR.

GVW (Gross vehicle weight)

This is the Base Curb Weight plus actual Cargo Weight plus passengers.

GVWR (Gross vehicle weight rating)

This is the maximum allowable weight of the fully loaded vehicle (including all options, equipment, passengers and cargo). The GVWR is shown on the certification label.

Overloading

⚠ WARNING - Vehicle weight

The gross axle weight rating (GAWR) and the gross vehicle weight rating (GVWR) for your vehicle are on the certification label attached to the driver's (or front passenger's) door. Exceeding these ratings can cause an accident or vehicle damage. You can calculate the weight of your load by weighing the items (and people) before putting them in the vehicle. Be careful not to overload your vehicle.

What to do in an emergency

Road warning 7-2
- Hazard warning flasher 7-2

In case of an emergency while driving. 7-3
- If the engine stalls at a crossroad or crossing. 7-3
- If you have a flat tire while driving. 7-3
- If engine stalls while driving 7-3

If the engine will not start 7-4
- If engine doesn't turn over or turns over slowly 7-4
- If engine turns over normally but does not start 7-4

Emergency starting 7-5
- Jump starting 7-5
- Push-starting 7-7

If the engine overheats. 7-8

Tire Pressure Monitoring System (TPMS) 7-9
- Check tire pressure 7-9
- Low tire pressure telltale 7-11
- TPMS (Tire Pressure Monitoring System) malfunction indicator 7-12
- Changing a tire with TPMS 7-13

If you have a flat tire (with spare tire). 7-16
- Jack and tools 7-16
- Removing and storing the spare tire 7-17
- Changing tires 7-18
- Jack label 7-25
- EC Declaration of Conformity for Jack 7-26

If you have a flat tire (with tire mobility kit) . . . 7-27
- Introduction 7-28
- Components of the Tire Mobility Kit (TMK). 7-29
- Using the TMK 7-31
- Distributing the sealant. 7-33
- Checking the tire inflation pressure 7-34
- Notes on the safe use of the Tire Mobility Kit 7-34
- Technical Data (16 inch tire) 7-35
- Technical Data (18 inch tire) 7-35

Towing 7-36
- Towing service 7-36
- Removable towing hook 7-37
- Emergency towing. 7-38

Emergency Commodity 7-41
- Fire extinguisher 7-41
- First aid kit 7-41
- Triangle reflector 7-41
- Tire pressure gauge 7-41

ROAD WARNING

Hazard warning flasher

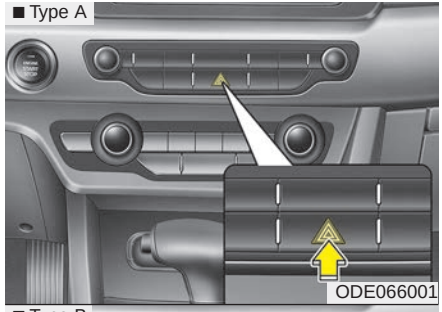

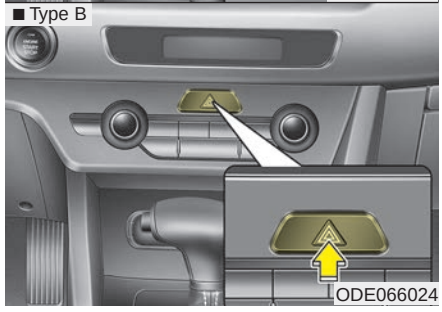

The hazard warning flasher serves as a warning to other drivers to exercise extreme caution when approaching, overtaking, or passing your vehicle.

It should be used whenever emergency repairs are being made or when the vehicle is stopped near the edge of a roadway.

Depress the flasher switch with the ignition switch in any position. The flasher switch is located in the center console switch panel. All turn signal lights will flash simultaneously.

- The hazard warning flasher operates whether your vehicle is running or not.
- The turn signals do not work when the hazard flasher is on.
- Care must be taken when using the hazard warning flasher while the vehicle is being towed.

IN CASE OF AN EMERGENCY WHILE DRIVING

If the engine stalls at a cross-road or crossing

- If the engine stalls at a crossroad or crossing, set the shift lever in the N (Neutral) position and then push the vehicle to a safe place.

If you have a flat tire while driving

If a tire goes flat while you are driving:

1. Take your foot off the accelerator pedal and let the vehicle slow down while driving straight ahead. Do not apply the brakes immediately or attempt to pull off the road as this may cause a loss of control. When the vehicle has slowed down to such a speed that it is safe to do so, brake carefully and pull off the road. Drive off the road as far as possible and park on a firm level ground. If you are on a divided highway, do not park in the median area between the two traffic lanes.
2. When the vehicle is stopped, turn on your emergency hazard flashers, set the parking brake and put the transaxle in P (dual clutch transmission).
3. Have all passengers get out of the vehicle. Be sure they all get out on the side of the vehicle that is away from traffic.
4. When changing a flat tire, follow the instruction provided later in this section.

If engine stalls while driving

1. Reduce your speed gradually, keeping a straight line. Move cautiously off the road to a safe place.
2. Turn on your emergency flashers.
3. Try to start the engine again. If your vehicle does not start, we recommend that you consult an authorized Kia dealer.

IF THE ENGINE WILL NOT START

If engine doesn't turn over or turns over slowly

1. If your vehicle has an dual clutch transmission, be sure the shift lever is in N (Neutral) or P (Park) and the emergency brake is set.
2. Check the battery connections to be sure they are clean and tight.
3. Turn on the interior light. If the light dims or goes out when you operate the starter, the battery is discharged.
4. Check the starter connections to be sure they are securely tightened.
5. Do not push or pull the vehicle to start it. See instructions for "Jump starting".

⚠ WARNING

If the engine will not start, do not push or pull the vehicle to start it. This could result in a collision or cause other damage. In addition, push or pull starting may cause the catalytic converter to be overloaded and create a fire hazard.

If engine turns over normally but does not start

1. Check the fuel level.
2. With the ignition switch in the LOCK position, check all connectors at the ignition coils and spark plugs. Reconnect any that may be disconnected or loose.
3. Check the fuel line in the engine compartment.
4. If the engine still does not start, we recommend that you call an authorized Kia dealer.

EMERGENCY STARTING

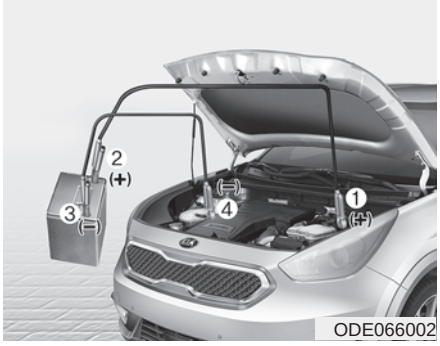

Connect cables in numerical order and disconnect in reverse order.

Jump starting

Jump starting can be dangerous if done incorrectly. Therefore, to avoid harm to yourself or damage to your vehicle or battery, follow the jump starting procedures. If in doubt, we strongly recommend that you have a competent technician or towing service jump start your vehicle.

⚠ CAUTION

Use only a 12-volt jumper system. You can damage a 12-volt starting motor, ignition system, and other electrical parts beyond repair by use of a 24-volt power supply (either two 12-volt batteries in series or a 24-volt motor generator set).

⚠ WARNING - Battery

Never attempt to check the electrolyte level of the battery as this may cause the battery to rupture or explode causing serious injury.

⚠ WARNING - Battery

- **Keep all flames or sparks away from the battery. The battery produces hydrogen gas which may explode if exposed to flame or sparks.**

  If these instructions are not followed exactly, serious personal injury and damage to the vehicle may occur! If you are not sure how to follow this procedure, seek qualified assistance. Automobile batteries contain sulfuric acid. This is poisonous and highly corrosive. When jump starting, wear protective glasses and be careful not to get acid on yourself, your clothing or on the vehicle.

(Continued)

(Continued)

- **Do not attempt to jump start the vehicle if the discharged battery is frozen or if the electrolyte level is low; the battery may rupture or explode.**
- **Do not allow the (+) and (-) jumper cables to touch. It may cause sparks.**
- **The battery may rupture or explode when you jump start with a low or frozen battery.**

Jump starting procedure

1. Make sure the booster battery is 12-volt and that its negative terminal is grounded.
2. If the booster battery is in another vehicle, do not allow the vehicles come in contact.
3. Turn off all unnecessary electrical loads.
4. Connect the jumper cables in the exact sequence shown in the illustration. First connect one end of a jumper cable to the positive terminal of the fuse box (1), then connect the other end to the positive terminal on the booster battery (2).

   Proceed to connect one end of the other jumper cable to the negative terminal of the booster battery (3), then the other end to a solid, stationary, metallic point (for example, the engine lifting bracket) away from the fuse box (4). Do not connect it to or near any part that moves when the engine is cranked.

   Do not allow the jumper cables to contact anything except the correct battery terminals or the correct ground. Do not lean over the battery when making connections.

⚠ CAUTION - Battery cables

Do not connect the jumper cable from the negative terminal of the booster battery to the negative terminal of the discharged battery. This can cause the discharged battery to overheat and crack, releasing battery acid.

Make sure to connect one end of the jumper cable to the negative terminal of the booster battery, and the other end to a metallic point, far away from the battery.

5. Start the engine of the vehicle with the booster battery and let it run at 2,000 rpm, then start the engine of the vehicle with the discharged battery.

If the cause of your battery discharging is not apparent, we recommend that the system be checked by an authorized Kia dealer.

Push-starting

Vehicles equipped with dual clutch transmission cannot be push-started.

Follow the directions in this section for jump-starting.

⚠ WARNING

Never tow a vehicle to start it because the sudden surge forward when the engine starts could cause a collision with the tow vehicle.

IF THE ENGINE OVERHEATS

If your temperature gauge indicates overheating, you will experience a loss of power, or hear loud pinging or knocking, the engine is probably too hot. If this happens, you should:

1. Pull off the road and stop as soon as it is safe to do so.
2. Place the shift lever in P (dual clutch transmission) and set the parking brake. If the air conditioning is on, turn it off.
3. If engine coolant is running out under the vehicle or steam is coming out from the hood, stop the engine. Do not open the hood until the coolant has stopped running or the steaming has stopped. If there is no visible loss of engine coolant and no steam, leave the engine running and check to be sure the engine cooling fan is operating. If the fan is not running, turn the engine off.
4. Check to see if the water pump drive belt is missing. If it is not missing, check to see that it is tight.

   If the drive belt seems to be satisfactory, check for coolant leaking from the radiator, hoses or under the vehicle. (If the air conditioning had been in use, it is normal for cold water to be draining from it when you stop).

⚠ WARNING

While the engine is running, keep hair, hands and clothing away from moving parts such as the fan and drive belts to prevent injury.

5. If the water pump drive belt is broken or engine coolant is leaking out, stop the engine immediately and we recommend that you call an authorized Kia dealer.

⚠ WARNING

Do not remove the radiator cap when the engine is hot. This can allow coolant to blow out of the opening and cause serious burns.

6. If you cannot find the cause of the overheating, wait until the engine temperature has returned to normal. Then, if coolant has been lost, carefully add coolant to the reservoir to bring the fluid level in the reservoir up to the halfway mark.
7. Proceed with caution, keeping alert for further signs of overheating. If overheating happens again, we recommend that you call an authorized Kia dealer.

⚠ CAUTION

- ***Serious loss of coolant indicates there is a leak in the cooling system and we recommend that the system be checked by an authorized Kia dealer.***
- ***When the engine overheats from low engine coolant, suddenly adding engine coolant may cause cracks in the engine. To prevent damage, add engine coolant slowly in small quantities.***

TIRE PRESSURE MONITORING SYSTEM (TPMS) (IF EQUIPPED)

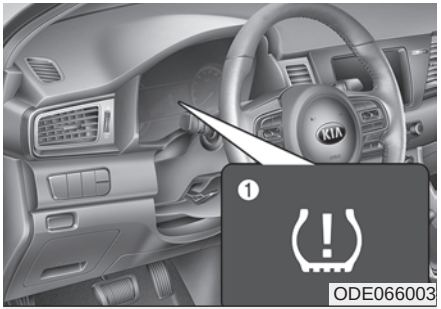

(1) Low tire pressure telltale / TPMS malfunction indicator

(2) Low tire pressure position telltale (Shown on the LCD display)

Check tire pressure

- You can check the tire pressure in the information mode on the cluster.
  - Refer to “User settings mode” in chapter 4.
- Tire pressure is displayed 1~2 minutes later after driving.
- If tire pressure is not displayed when the vehicle is stopped, “Drive to display” message displays. After driving, check the tire pressure.
- You can change the tire pressure unit in the user settings mode on the cluster.
  - psi, kpa, bar (Refer to “User settings mode” in chapter 4).

Each tire, including the spare (if provided), should be checked monthly when cold and inflated to the inflation pressure recommended by the vehicle manufacturer on the vehicle placard or tire inflation pressure label.

(If your vehicle has tires of a different size than the size indicated on the vehicle placard or tire inflation pressure label, you should determine the proper tire inflation pressure for those tires.)

As an added safety feature, your vehicle has been equipped with a tire pressure monitoring system (TPMS) that illuminates a low tire pressure telltale when one or more of your tires is significantly under-inflated. Accordingly, when the low tire pressure telltale illuminates, you should stop and check your tires as soon as possible, and inflate them to the proper pressure. Driving on a significantly under-inflated tire causes the tire to overheat and can lead to tire failure. Under-inflation also reduces fuel efficiency and tire tread life, and may affect the vehicle's handling and stopping ability.

Please note that the TPMS is not a substitute for proper tire maintenance, and it is the driver's responsibility to maintain correct tire pressure, even if under-inflation has not reached the level to trigger illumination of the TPMS low tire pressure telltale.

Your vehicle has also been equipped with a TPMS malfunction indicator to indicate when the system is not operating properly. The TPMS malfunction indicator is combined with the low tire pressure telltale. When the system detects a malfunction, the telltale will flash for approximately 1 minute and then remain continuously illuminated. This sequence will continue upon subsequent vehicle start-ups as long as the malfunction exists. When the TPMS malfunction indicator remains illuminated after blinking for approximately 1 minute, the system may not be able to detect or signal low tire pressure as intended.

TPMS malfunctions may occur for a variety of reasons, including the installation of replacement or alternate tires or wheels on the vehicle that prevent the TPMS from functioning properly. Always check the TPMS malfunction telltale after replacing one or more tires or wheels on your vehicle to ensure that the replacement or alternate tires and wheels allow the TPMS to continue to function properly.

✻ NOTICE

If any of the below happens, we recommend that the system be checked by an authorized Kia dealer.

1. **The low tire pressure telltale/ TPMS malfunction indicator do not illuminate for 3 seconds when the ignition switch is turned to the ON position or engine is running.**
2. **The TPMS malfunction indicator remains illuminated after blinking for approximately 1 minute.**
3. **The Low tire pressure position telltale remains illuminated.**

Low tire pressure telltale

OQLE065037

When the tire pressure monitoring system warning indicators are illuminated and warning massage displayed on the cluster LCD display, one or more of your tires is significantly under-inflated. The low tire pressure position telltale light will indicate which tire is significantly under-inflated by illuminating the corresponding position light.

If either telltale illuminates, immediately reduce your speed, avoid hard cornering and anticipate increased stopping distances. You should stop and check your tires as soon as possible. Inflate the tires to the proper pressure as indicated on the vehicle's placard or tire inflation pressure label located on the driver's side center pillar outer panel. If you cannot reach a service station or if the tire cannot hold the newly added air, replace the low pressure tire with a spare tire.

If you drive the vehicle for about 10 minutes at speeds above 25 km/h after replaceing the low pressure tire with the spare tire, one of the following will happen:

- The TPMS malfunction indicator may blink for approximately 1 minute and then remain continuously illuminated because the TPMS sensor is not mounted on the spare wheel. (changed tire equipped with a sensor not in the vehicle)

- The TPMS malfunction indicator will remain continuously illuminated while driving because the TPMS sensor is not mounted on the spare wheel. (changed tire equipped with a sensor in the vehicle)

⚠ CAUTION

In winter or cold weather, the low tire pressure telltale may illuminate if the tire pressure was adjusted to the recommended tire inflation pressure in warm weather. It does not mean your TPMS is malfunctioning because the decreased temperature leads to a lowering of tire pressure.

When you drive your vehicle from a warm area to a cold area or from a cold area to a warm area, or the outside temperature is higher or lower, you should check the tire inflation pressure and adjust the tires to the recommended tire inflation pressure.

⚠ WARNING - Low pressure damage

Significantly low tire pressure makes the vehicle unstable and can contribute to loss of vehicle control and increased braking distances.

Continued driving on low pressure tires can cause the tires to overheat and fail.

TPMS (Tire Pressure Monitoring System) malfunction indicator

The TPMS malfunction indicator will illuminate after it blinks for approximately one minute when there is a problem with the Tire Pressure Monitoring System.

We recommend that the system be checked by an authorized Kia dealer to determine the cause of the problem.

✻ NOTICE

If there is a malfunction with the TPMS, the low tire pressure position telltale will not be displayed even though the vehicle has an underinflated tire.

⚠ **CAUTION**

- ***The TPMS malfunction indicator may blink for approximately 1 minute and then remain continuously illuminated if the vehicle is moving around electric power supply cables or radios transmitter such as at police stations, government and public offices, broadcasting stations, military installations, airports, or transmitting towers, etc. This can interfere with normal operation of the Tire Pressure Monitoring System (TPMS).***

(Continued)

(Continued)

- ***The TPMS malfunction indicator may blink for approximately 1 minute and then remain continuously illuminated if snow chains are used or some separate electronic devices such as notebook computer, mobile charger, remote starter or navigation etc., are used in the vehicle.***

  This can interfere with normal operation of the Tire Pressure Monitoring System (TPMS).

Changing a tire with TPMS

If you have a flat tire, the low Tire Pressure and Position telltales will come on. We recommend that the system be checked by an authorized Kia dealer.

⚠ **CAUTION**

We recommend that you use the sealant approved by Kia.

The sealant on the tire pressure sensor and wheel shall be eleminated when you replace the tire with a new one.

Each wheel is equipped with a tire pressure sensor mounted inside the tire behind the valve stem. You must use TPMS specific wheels. It is recommended that you have your tires serviced by an authorized Kia dealer.

If you drive the vehicle for about 10 minutes at speeds above 25 km/h after replaceing the low pressure tire with the spare tire, one of the following will happen:

- The TPMS malfunction indicator may blink for approximately 1 minute and then remain continuously illuminated because the TPMS sensor is not mounted on the spare wheel. (changed tire equipped with a sensor not in the vehicle)
- The TPMS malfunction indicator will remain continuously illuminated while driving because the TPMS sensor is not mounted on the spare wheel. (changed tire equipped with a sensor in the vehicle)

You may not be able identify a low tire by simply looking at it. Always use a good quality tire pressure gauge to measure the tire's inflation pressure. Please note that a tire that is hot (from being driven) will have a higher pressure measurement than a tire that is cold (from sitting stationary for at least 3 hours and driven less than 1.6 km (1 mile) during that 3 hour period).

Allow the tire to cool before measuring the inflation pressure. Always be sure the tire is cold before inflating to the recommended pressure.

A cold tire means the vehicle has been sitting for 3 hours and driven for less than 1.6 km (1 mile) in that 3 hour period.

⚠ CAUTION

We recommend that you use the sealant approved by Kia if your vehicle is equipped with a Tire Pressure Monitoring System. The liquid sealant can damage the tire pressure sensors.

⚠ WARNING - TPMS

- **The TPMS cannot alert you to severe and sudden tire damage caused by external factors such as nails or road debris.**
- **If you feel any vehicle instability, immediately take your foot off the accelerator, apply the brakes gradually and with light force, and slowly move to a safe position off the road.**

⚠ WARNING - Protecting TPMS

Tampering with, modifying, or disabling the Tire Pressure Monitoring System (TPMS) components may interfere with the system's ability to warn the driver of low tire pressure conditions and/or TPMS malfunctions. Tampering with, modifying, or disabling the Tire Pressure Monitoring System (TPMS) components may void the warranty for that portion of the vehicle.

⚠ WARNING - For EUROPE

- **Do not modify the vehicle, it may interfere with the TPMS function.**
- **The wheels on the market do not have a TPMS sensor.**

  For your safety, we recommend that you use parts for replacement from an authorized Kia dealer.
- **If you use the wheels on the market, use a TPMS sensor approved by a Kia dealer.**

  If your vehicle is not equipped with a TPMS sensor or TPMS does not work properly, you may fail the periodic vehicle inspection conducted in your country.

(Continued)

(Continued)

❋ All vehicles sold in the EUROPE market during below period must be equipped with TPMS.

- New model vehicle : Nov. 1, 2012 ~

- Current model vehicle : Nov. 1, 2014~ (Based on vehicle registrations)

IF YOU HAVE A FLAT TIRE (WITH SPARE TIRE, IF EQUIPPED)

Jack and tools

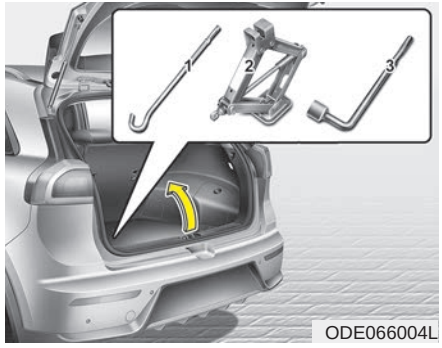

The jack, jack handle, wheel lug nut wrench are stored in the luggage compartment.

Pull up the luggage box cover to reach this equipment.

(1) Jack handle

(2) Jack

(3) Wheel lug nut wrench

Jacking instructions

The jack is provided for emergency tire changing only.

To prevent the jack from “rattling” while the vehicle is in motion, store it properly.

Follow jacking instructions to reduce the possibility of personal injury.

⚠ WARNING - Changing tires

- **Never attempt vehicle repairs in the traffic lanes of a public road or highway.**
- **Always move the vehicle completely off the road and onto the shoulder before trying to change a tire. The jack should be used on firm level ground. If you cannot find a firm level place off the road, call a towing service company for assistance.**

(Continued)

(Continued)

- **Be sure to use the correct front and rear jacking positions on the vehicle; never use the bumpers or any other part of the vehicle for jacking support.**
- **The vehicle can roll off the jack causing serious injury or death.**
- **Do not get under a vehicle that is supported by a jack.**
- **Do not start or run the engine while the vehicle is on the jack.**
- **Do not allow anyone remain in the vehicle while it is on the jack.**
- **Make sure any children present are in a secure place away from the road and from the vehicle to be raised with the jack.**

Removing and storing the spare tire

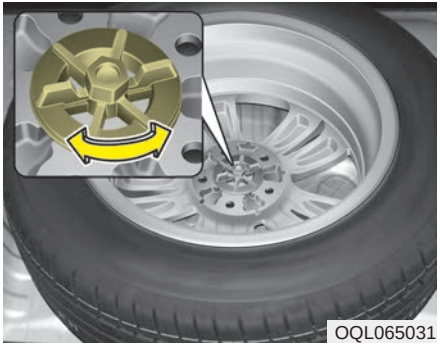

Turn the tire hold-down wing bolt counterclockwise.

Store the tire in the reverse order of removal.

To prevent the spare tire and tools from “rattling” while the vehicle is in motion, store them properly.

If it is hard to loosen the tire hold-down wing bolt by hand, you can loosen it easily using the jack handle.

1. Put the jack handle (1) inside of the tire hold-down wing bolt.
2. Turn the tire hold-down wing bolt counterclockwise with the jack handle.

⚠ WARNING

Ensure the spare tire retainer is properly aligned with the center of the spare tire to prevent the spare tire from “rattling”.

Otherwise, it may cause the spare tire to fall off the carrier and lead to an accident.

Changing tires

1VQA4022

1. Park on a level surface and apply the parking brake firmly.
2. Shift the shift lever into P (Park) with dual clutch transmission.
3. Activate the hazard warning flasher.

1VQA4023

4. Remove the wheel lug nut wrench, jack, jack handle, and spare tire from the vehicle.
5. Block both the front and rear of wheel that is diagonally opposite the jack position.

⚠ WARNING - Changing a tire

- **To prevent vehicle movement while changing a tire, always set the parking brake fully, and always block the wheel diagonally opposite the wheel being changed.**
- **We recommend that the wheels of the vehicle be chocked, and that no person remain in a vehicle that is being jacked.**

ODE066025L

6. Loosen the wheel lug nuts counterclockwise one turn each, but do not remove any nut until the tire has been raised off the ground.

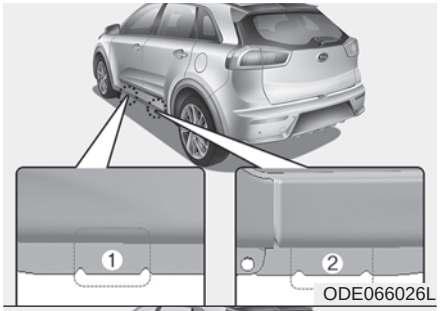

ODE066026L

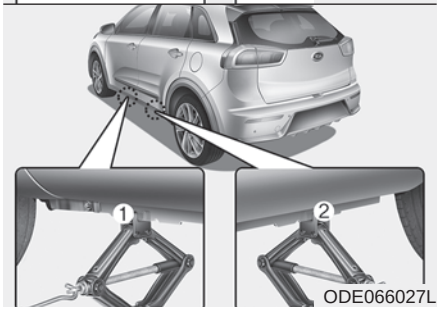

ODE066027L

7. Place the jack at the front(1) or rear(2) jacking position closest to the tire you are changing. Place the jack at the designated locations under the frame. The jacking positions are plates welded to the frame with two tabs and a raised dot to index with the jack.

⚠ WARNING - Jack location

To reduce the possibility of injury, be sure to use only the jack provided with the vehicle and in the correct jack position; never use any other part of the vehicle for jack support.

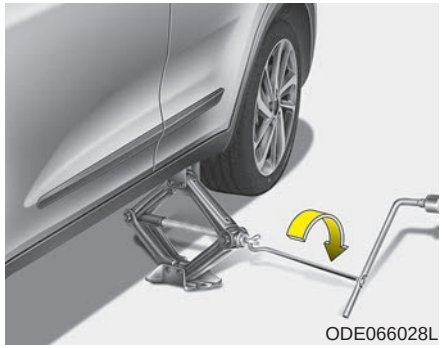
ODE066028L

8. Insert the jack handle into the jack and turn it clockwise, raising the vehicle until the tire just clears the ground. This measurement is approximately 30 mm (1.2 in). Before removing the wheel lug nuts, make sure the vehicle is stable and that there is no chance for movement or slippage.

9. Loosen the wheel nuts and remove them with your fingers. Slide the wheel off the studs and lay it flat so it cannot roll away. To put the wheel on the hub, pick up the spare tire, line up the holes with the studs and slide the wheel onto them.

   If this is difficult, tip the wheel slightly and get the top hole in the wheel lined up with the top stud. Then jiggle the wheel back and forth until the wheel can be slid over the other studs.

⚠ WARNING

Wheels may have sharp edges. Handle them carefully to avoid possible severe injury. Before putting the wheel into place, be sure that there is nothing on the hub or wheel (such as mud, tar, gravel, etc.) that interferes with the wheel from fitting solidly against the hub.

If there is, remove it. If there is not good contact on the mounting surface between the wheel and hub, the wheel nuts could come loose and cause the loss of a wheel. Loss of a wheel may result in loss of control of the vehicle. This may cause serious injury or death.

10. To reinstall the wheel, hold it on the studs, put the wheel nuts on the studs and tighten them finger tight. Jiggle the tire to be sure it is completely seated, then tighten the nuts as much as possible with your fingers again.
11. Lower the vehicle to the ground by turning the wheel nut wrench counterclockwise.

ODE066029L

Then position the wrench as shown in the drawing and tighten the wheel nuts. Be sure the socket is seated completely over the nut. Do not stand on the wrench handle or use an extension pipe over the wrench handle. Go around the wheel tightening every other nut until they are all tight. Then double-check each nut for tightness. After changing wheels, we recommend that the system be checked by an authorized Kia dealer.

Wheel nut tightening torque:

Steel wheel & aluminum alloy wheel:

11~13kgf·m (79~94lbf·ft)

If you have a tire gauge, remove the valve cap and check the air pressure. If the pressure is lower than recommended, drive slowly to the nearest service station and inflate to the correct pressure. If it is too high, adjust it until it is correct. Always reinstall the valve cap after checking or adjusting tire pressure. If the cap is not replaced, air may leak from the tire. If you lose a valve cap, buy another and install it as soon as possible.

After you have changed wheels, always secure the flat tire in its place and return the jack and tools to their proper storage locations.

⚠ CAUTION

Your vehicle has metric threads on the wheel studs and nuts. Make certain during wheel removal that the same nuts that were removed are reinstalled - or, if replaced, that nuts with metric threads and the same chamfer configuration are used. Installation of a non-metric thread nut on a metric stud or vice-versa will not secure the wheel to the hub properly and will damage the stud so that it must be replaced.

Note that most lug nuts do not have metric threads. Be sure to use extreme care in checking for thread style before installing aftermarket lug nuts or wheels. If in doubt, consult an authorized Kia dealer.

⚠ WARNING - Wheel studs

If the studs are damaged, they may lose their ability to retain the wheel. This could lead to the loss of the wheel and a collision resulting in serious injuries.

To prevent the jack, jack handle, wheel lug nut wrench and spare tire from rattling while the vehicle is in motion, store them properly.

⚠ WARNING - Inadequate spare tire pressure

Check the inflation pressures as soon as possible after installing the spare tire. Adjust it to the specified pressure, if necessary. Refer to "Tires and wheels" in chapter 9.

Important - use of compact spare tire (if equipped)

Your vehicle is equipped with a compact spare tire. This compact spare tire takes up less space than a regular-size tire. This tire is smaller than a conventional tire and is designed for temporary use only.

⚠ CAUTION

- ***You should drive carefully when the compact spare is in use. The compact spare should be replaced by the proper conventional tire and rim at the first opportunity.***
- ***The operation of this vehicle is not recommended with more than one compact spare tire in use at the same time.***

⚠ WARNING

The compact spare tire is for emergency use only. Do not operate your vehicle on this compact spare at the speed over 80 km/h (50 mph). The original tire should be repaired or replaced as soon as possible to avoid failure of the spare possibly leading to personal injury or death.

The compact spare should be inflated to 420 kPa (60 psi).

✻ NOTICE

Check the inflation pressure after installing the spare tire. Adjust it to the specified pressure, as necessary.

When using a compact spare tire, observe the following precautions:

- Under no circumstances should you exceed 80 km/h (50 mph); a higher speed could damage the tire.
- Ensure that you drive slowly enough to avoid all hazards. Any road hazard, such as a pothole or debris, could seriously damage the compact spare.
- Any continuous road use of this tire could result in tire failure, loss of vehicle control, and possible personal injury.
- Do not exceed the vehicle's maximum load rating or the load-carrying capacity shown on the sidewall of the compact spare tire.
- Avoid driving over obstacles. The compact spare tire diameter is smaller than the diameter of a conventional tire and reduces the ground clearance approximately 2.5 cm (1 inch), which could result in damage to the vehicle.
- Do not take the vehicle through an automatic car wash while the compact spare tire is installed.
- Do not use tire chains on the temporary compact tire. Because of the smaller size, a tire chain will not fit properly. This could damage the vehicle and result in loss of the chain.
- Temporary compact tire should not be installed on the front axle if the vehicle must be driven in snow or on ice.

- Do not use the temporary compact tire on any other vehicle because this tire has been designed especially for your vehicle.
- The temporary compact tire tread life is shorter than a regular tire. Inspect your temporary compact tire regularly and replace worn compact spare tires with the same size and design, mounted on the same wheel.
- The temporary compact tire should not be used on any other wheels, nor should standard tires, snow tires, wheel covers or trim rings be used with the temporary compact spare wheel. If such use is attempted, damage to these items or other car components may occur.
- Do not use more than one temporary compact tire at a time.
- Do not tow a trailer while the temporary compact tire is installed.

Jack label

■ Example

• Type A

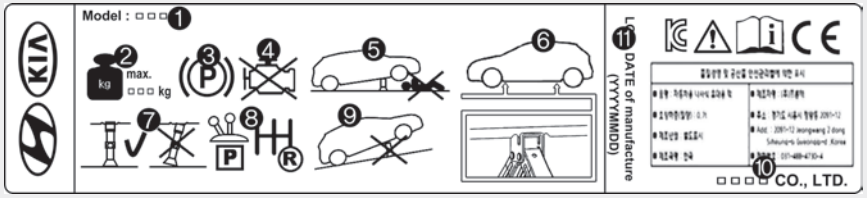

OHYK064001

• Type B

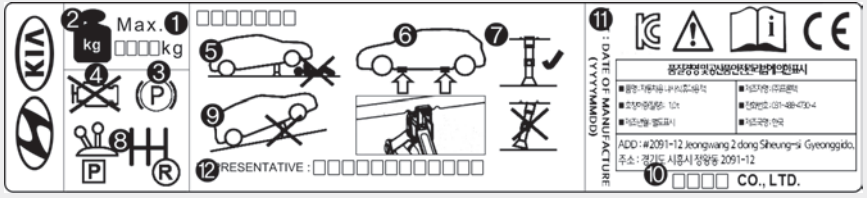

OHYK064005

• Type C

OHYK064002

❊ The actual Jack label in the vehicle may differ from the illustration.
For more detailed specifications, refer to the label attached to the jack.

1. Model Name
2. Maximum allowable load
3. When using the jack, set your parking brake.
4. When using the jack, stop the engine.
5. Do not get under a vehicle that is supported by a jack.
6. The designated locations under the frame
7. When supporting the vehicle, the base plate of jack must be vertical under the lifting point.
8. Move the shift lever to the P position on vehicles with dual clutch transmission
9. The jack should be used on firm level ground.
10. Jack manufacturer
11. Production date
12. Representative company and address

EC Declaration of Conformity for Jack

CE

EC Declaration of Conformity
according to EC Machinery Directive 2006/42/EC

We, **FRONTEC CO., LTD.**
2091-12 Jeongwang 2(i)-dong Siheung-si Gyeonggi-d ,Korea
declare under our sole responsibility that the product

Product : JACK-ASSY
Type Designation(s) : 1200KG, 1000KG, 800KG, 700KG, 500KG
Serial No. : N/A (prototype)
Year of Manufacture : 2013
to which this declaration relates is in conformity with the following standard(s) or other normative document(s);

EN ISO12100 (2010)	Safety of machinery - General principles for design – Risk assessment and risk reduction
EN 1494/A1 (2008)	Mobile or movable jacks and associated lifting equipment

following the provisions of Directive(s);

2006/42/EC	Directive on the approximation of the laws of Member States relating to machinery (OJ L157 Jun, 9, 2006)

Siheung-si Gyeonggi-d ,Korea / 15.07.2013 SOO HONG, MIN President
(Place and date of issue)(Name and signature or equivalent making of authorized person)

* T.C.F Compiling Location:
- Address: PRIBORSKA 280, 739 42 FRYDEK MISTEK,CHLEBOVICE, CZECH REPUBLIC
- Team: Purchase team
- Company name: HANWHA L&C CZECH s.r.o

OUM074110L

IF YOU HAVE A FLAT TIRE (WITH TIRE MOBILITY KIT, IF EQUIPPED)

■ 18 inch tire

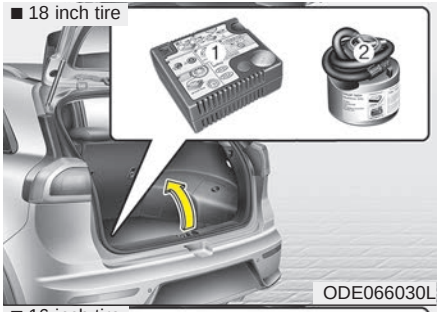

ODE066030L

■ 16 inch tire

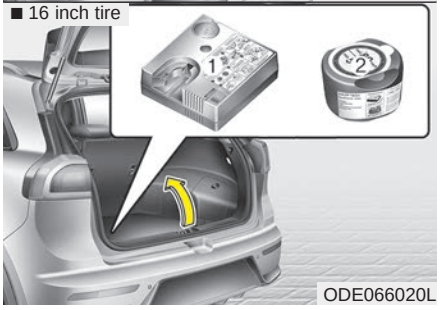

ODE066020L

Please read the instructions before using the Tire Mobility Kit.

(1) Compressor

(2) Sealant bottle

The Tire Mobility Kit is a temporary fix to the tire and we recommend that the tire inspected by an authorized Kia dealer as soon as possible.

⚠ CAUTION - One sealant for one tire

When two or more tires are flat, do not use the tire mobility kit because the supported one sealant of Tire Mobility Kit is only used for one flat tire.

⚠ WARNING - Tire wall

Do not use the Tire Mobility Kit to repair punctures in the tire walls. This can result in an accident due to tire failure.

⚠ WARNING - Temporary fix

Have your tire repaired as soon as possible. The tire may lose air pressure at any time after inflating with the Tire Mobility Kit.

⚠ CAUTION

- ***When replacing or repairing the tire after using tire sealant, make certain to remove the sealant attached to the inner part of the tire, including the tire air pressure detection sensor and wheel. If the sealant is not removed, noise and vibration may occur, and the tire air pressure detection sensor may be damaged.***
- ***We recommend use original Kia manufactured sealant. Using aftermarket sealant may damage the tire air pressure detection sensor.***
- ***If the TPMS warning light illuminates after using the TMK, we recommend that you contact an authorized Kia dealer.***

Introduction

■ 18 inch tire

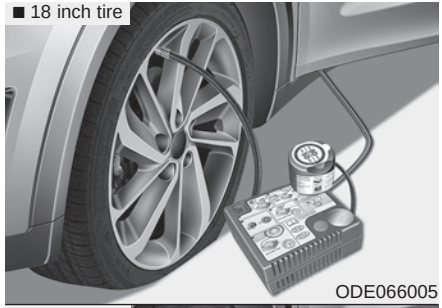

ODE066005

■ 16 inch tire

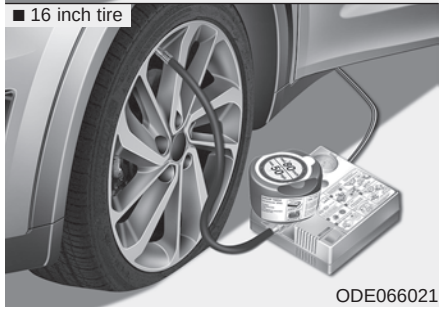

ODE066021

With the Tire Mobility Kit (TMK) you stay mobile even after experiencing a tire puncture.

The system of compressor and sealing compound effectively and comfortably seals most punctures in a passenger car tire caused by nails or similar objects and reinflates the tire.

After you ensured that the tire is properly sealed you can drive cautiously on the tire (up to 200 km (120 miles)) at a max. speed of 80 km/h (50 mph) in order to reach a vehicle or tire dealer to have the tire replaced.

It is possible that some tires, especially with larger punctures or damage to the sidewall, cannot be sealed completely.

Air pressure loss in the tire may adversely affect tire performance.

For this reason, you should avoid abrupt steering or other driving maneuvers, especially if the vehicle is heavily loaded or if a trailer is in use.

The TMK is not designed or intended as a permanent tire repair method and is to be used for one tire only.

This instruction shows you step by step how to temporarily seal the puncture simply and reliably.

Read the section "Notes on the safe use of the TMK".

⚠ WARNING

Do not use the TMK if a tire is severely damaged by driving run flat or with insufficient air pressure.

Only punctured areas located within the tread region of the tire can be sealed using the TMK.

Components of the Tire Mobility Kit (TMK)

■ 18 inch tire

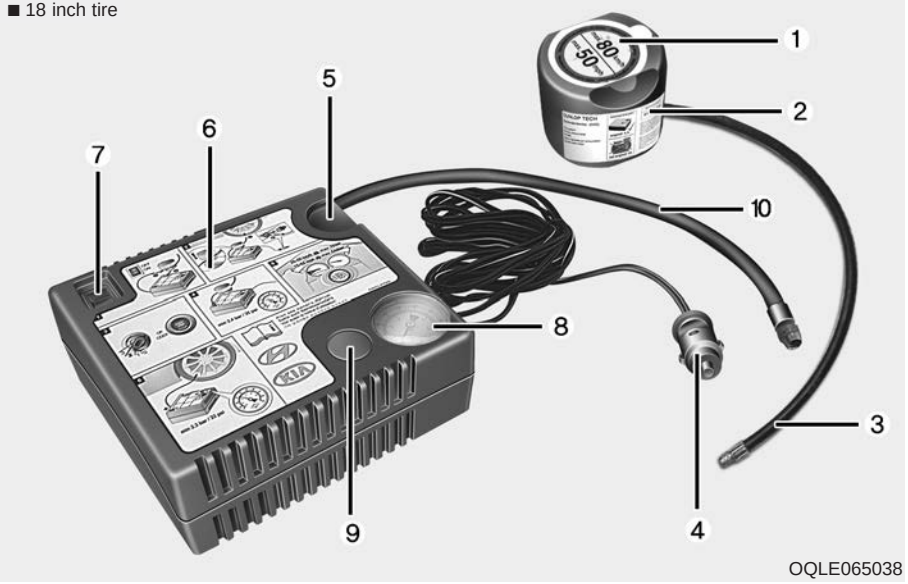

1. Speed restriction label
2. Sealant bottle and label with speed restriction
3. Filling hose from sealant bottle to wheel
4. Connectors and cable for the battery direct connection
5. Holder for the sealant bottle
6. Compressor
7. On/off switch
8. Pressure gauge for displaying the tire inflation pressure
9. Button for reducing tire inflation Pressure
10. Hose to connect compressor and sealant bottle or compressor and wheel

Connectors, cable and connection hose are stored in the compressor housing.

⚠ WARNING - Expired sealant

Do not use the tire sealant after the sealant has expired (i.e. pasted the expiration date on the sealant container). This can increase the risk of tire failure.

⚠ WARNING - Sealant

- **Keep out of reach of children.**
- **Avoid contact with eyes.**
- **Do not swallow.**

Strictly follow the specified sequence, otherwise the sealant may escape under high pressure.

■ 16 inch tire

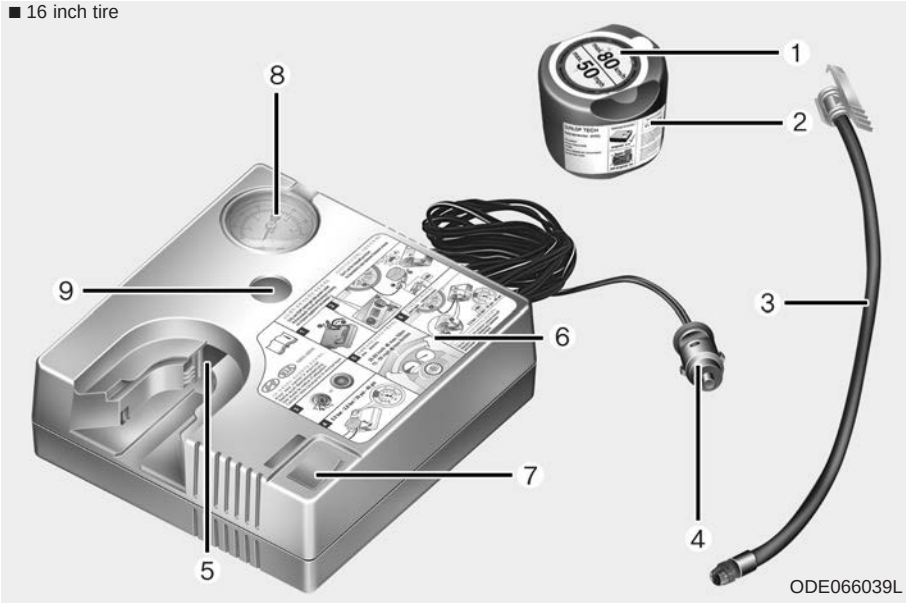

1. Speed restriction label
2. Sealant bottle and label with speed restriction
3. Filling hose from sealant bottle to wheel
4. Connectors and cable for the power outlet direct connection
5. Holder for the sealant bottle
6. Compressor
7. On/off switch
8. Pressure gauge for displaying the tire inflation pressure
9. Button for reducing tire inflation pressure

Connectors, cable and connection hose are stored in the compressor housing.

⚠ WARNING

Before using the TireMobilityKit, follow the instructions on the sealant bottle.

Remove the label with the speed restriction from the sealant bottle and apply it to the steering wheel.

Please note the expiry date on the sealant bottle.

Using the TMK

1. Detach the speed restriction label (1) from the sealant bottle (2), and place it in a highly visible place inside the vehicle such as on the steering wheel to remind the driver not to drive too fast.

■ 18 inch tire

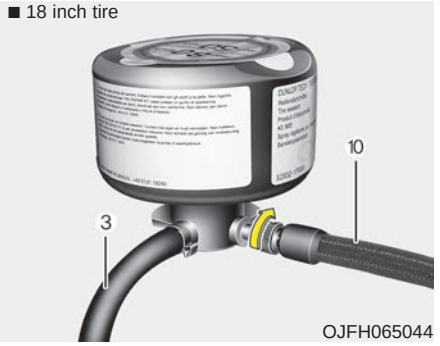

OJFH065044

2. Screw connection hose (10) onto the connector of the sealant bottle. (18 inch tire only)

■ 16 inch tire

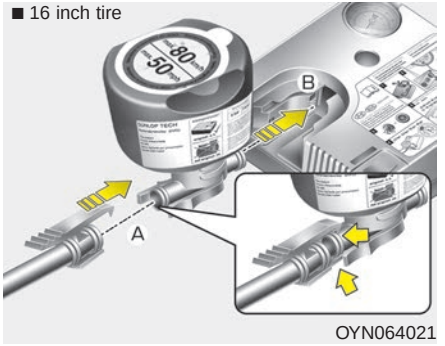

OYN064021

2. Connect the filling hose (3) onto the connector of the sealant bottle (A). (16 inch tire only)
3. Ensure that button (9) on the compressor is not pressed.

ODE066007

■ 18 inch tire

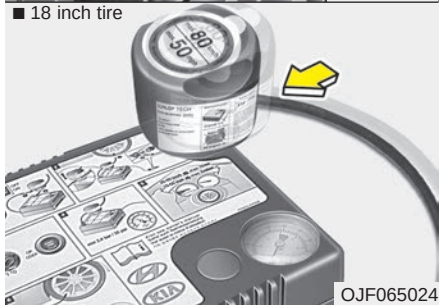

OJF065024

4. Unscrew the valve cap from the valve of the flat tire and screw filling hose (3) of the sealant bottle onto the valve.

5. Insert the sealant bottle into the housing (5) of the compressor so that the bottle is upright.

6. Ensure that the compressor is switched off, position 0.

ODE066008L

7. Connect between compressor and the vehicle power outlet using the cable and connectors.

8. With the engine start/stop button position on or ignition switch position on, switch on the compressor and let it run for approximately 5~7 minutes to fill the sealant up to proper pressure. (refer to the Tire and Wheels, chapter 9). The inflation pressure of the tire after filling is unimportant and will be checked/corrected later.

   Be careful not to overinflate the tire and stay away from the tire when filling it.

When the tire and wheel are damaged, do not use Tire Mobility Kit for your safety.

⚠ CAUTION - Tire pressure

Do not attempt to drive your vehicle if the tire pressure is below 250 kPa (36 psi/2.5 bar). This could result in an accident due to sudden tire failure.

9. Switch off the compressor.
10. Detach the hoses from the sealant bottle connector and from the tire valve.

Return the TMK to its storage location in the vehicle.

⚠ WARNING - Carbon monoxide

Carbon monoxide poisoning and suffocation is possible if the engine is left running in a poorly ventilated or unventilated location (such as inside a building).

Distributing the sealant

11. Immediately drive approximately 7~10km (4~6miles or, about 10min) to evenly distribute the sealant in the tire.

⚠ CAUTION

Do not exceed a speed of 60 km/h (35 mph). If possible, do not fall below a speed of 20 km/h (12 mph).

While driving, if you experience any unusual vibration, ride disturbance or noise, reduce your speed and drive with caution until you can safely pull off of the side of the road. Call for road side service or towing.

When you use the Tire Mobility Kit, the tire pressure sensors and wheel may be stained by sealant. Therefore, remove the tire pressure sensors and wheel stained by sealant and we recommend that inspect at an authorized Kia dealer.

Checking the tire inflation pressure

1. After driving approximately 7~10 km (4~6 miles or about 10 minutes), stop at a suitable location.
2. • Connect connection hose (10) of the compressor directly to the tire valve. (18 inch tire only)
   • Connect the filling hose (3) of the compressor (clip mounted side) directly and then connect the filling hose (3) (opposite side) to the tire valve. (16 inch tire only)
3. Connect between compressor and the vehicle power outlet using the cable and connectors.

4. Adjust the tire inflation pressure to 250 kPa (36 psi/2.5 bar). With the ignition switched on, proceed as follows.
   - **To increase the inflation pressure:** Switch on the compressor, position I. To check the current inflation pressure setting, briefly switch off the compressor.

⚠ WARNING

Do not let the compressor run for more than 10 minutes, otherwise the device will overheat and may be damaged.

   - **To reduce the inflation pressure:** Press the button (9) on the compressor.

⚠ CAUTION

If the inflation pressure is not maintained, drive the vehicle a second time, refer to Distributing the sealant. Then repeat steps 1 to 4.

Use of the TMK may be ineffectual for tire damage larger than approximately 4 mm (0.16 in).

We recommend that you contact an authorized Kia dealer if the tire cannot be made roadworthy with the Tire Mobility Kit.

⚠ WARNING

The tire inflation pressure must be at least 250 kPa (36 psi/2.5 bar). If it is not, do not continue driving. Call for road side service or towing.

Notes on the safe use of the Tire Mobility Kit

- Park your car at the side of the road so that you can work with the TMK away from moving traffic. Place your warning triangle in a prominent place to make passing vehicles aware of your location.
- To be sure your vehicle will not move, even when you're on fairly level ground, always set your parking brake.
- Only use the TMK for sealing/inflation passenger car tires. Do not use on motorcycles, bicycles or any other type of tires.
- Do not remove any foreign objects-such as nails or screws -that have penetrated the tire.
- Before using the TMK, read the precautionary advice printed on the sealant bottle!

- Provided the car is outdoors, leave the engine running. Otherwise operating the compressor may eventually drain the car battery.
- Never leave the TMK unattended while it is being used.
- Do not leave the compressor running for more than 10 min. at a time or it may overheat.
- Do not use the TMK if the ambient temperature is below -30°C (-22°F).
- When the tire and wheel are damaged, do not use Tire Mobility Kit for your safety.

Technical Data (16 inch tire)

System voltage: DC 12 V
Working voltage: DC 10 - 15 V
Amperage rating: max. 10A ± 1A (at DC 12V operation)
Suitable for use at temperatures: -30 ~ +70°C (-22 ~ +158°F)
Max. working pressure: 6 bar (87 psi)
Size
Compressor: 161 X 150 X 55.8 mm (6.3 X 5.9 X 2.2 in.)
Sealant bottle: 81 x 85 ø mm (3.2 x 3.3 ø in.)
Compressor weight: 735 g ± 25 g (1.62 lbs ± 0.06 lbs)
Sealant volume: 200 ml (12.2 cu. in.)

Technical Data (18 inch tire)

System voltage: DC 12 V
Working voltage: DC 10 - 15 V
Amperage rating: MAX. 15A ± 1A (at DC 12V operation)
Suitable for use at temperatures: -30 ~ +70°C (-22 ~ +158°F)
Max. working pressure: 6 bar (87 psi)
Size
Compressor: 168 x 150 x 68 mm (6.6 x 5.9 x 2.7 in.)
Sealant bottle: 104 x 85 ø mm (4.1 x 3.3 ø in.)
Compressor weight: 1050g ± 30g (2.31 lbs ± 0.07 lbs)
Sealant volume: 300 mL (18.3 cu. in)

❊ Sealant and spare parts can be obtained and replaced at an authorized vehicle or tire dealer. Empty sealant bottles may be disposed of at home. Liquid residue from the sealant should be disposed of by your vehicle or tire dealer or in accordance with local waste disposal regulations.

TOWING

Towing service

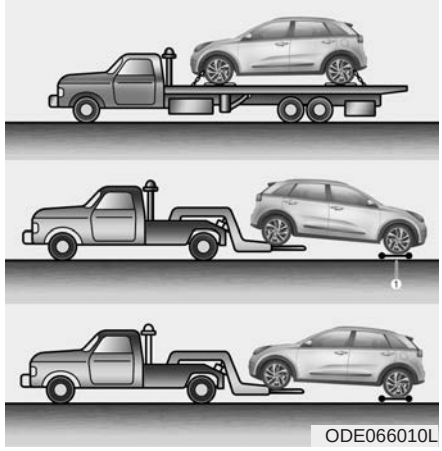

ODE066010L

If emergency towing is necessary, we recommend having it done by an authorized Kia dealer or a commercial tow-truck service. Proper lifting and towing procedures are necessary to prevent damage to the vehicle. The use of wheel dollies (1) or flatbed is recommended.

On FWD vehicles, it is acceptable to tow the vehicle with the rear wheels on the ground (without dollies) and the front wheels off the ground.

If any of the loaded wheels or suspension components are damaged or the vehicle is being towed with the front wheels on the ground, use a towing dolly under the front wheels.

When being towed by a commercial tow truck and wheel dollies are not used, the front of the vehicle should always be lifted, not the rear.

ODE066012

ODE066011

⚠ CAUTION

- ***Do not tow the vehicle backwards with the front wheels on the ground as this may cause damage to the vehicle.***
- ***Do not tow with sling-type equipment. Use wheel lift or flatbed equipment.***

When towing your vehicle in an emergency without wheel dollies :

1. Set the ignition switch in the ACC position.
2. Place the transaxle shift lever in N (Neutral).
3. Release the parking brake.

⚠ CAUTION

Failure to place the transaxle shift lever in N (Neutral) may cause internal damage to the transaxle.

Removable towing hook (if equipped)

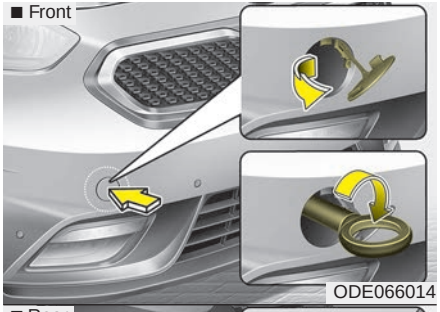

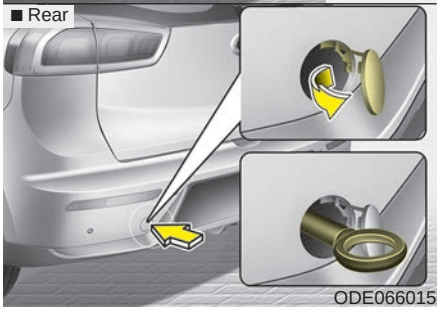

1. Open the tailgate, and remove the towing hook from the tool case.
2. Remove the hole cover pressing the upper (front) / lower (rear) part of the cover on the bumper.
3. Install the towing hook by turning it clockwise into the hole until it is fully secured.
4. Remove the towing hook and install the cover after use.

Emergency towing

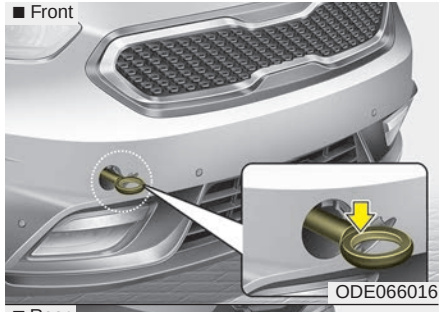

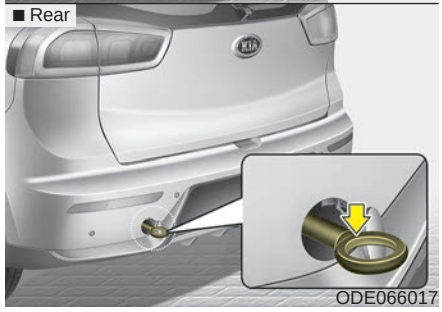

If towing is necessary, we recommend you to have it done by an authorized Kia dealer or a commercial tow truck service.

If towing service is not available in an emergency, your vehicle may be temporarily towed using a cable or chain secured to the emergency towing hook under the front (or rear) of the vehicle. Use extreme caution when towing the vehicle. A driver must be in the vehicle to steer it and operate the brakes.

Towing in this manner may be done only on hard-surfaced roads for a short distance and at low speed. Also, the wheels, axles, power train, steering and brakes must all be in good condition.

- Do not use the tow hooks to pull a vehicle out of mud, sand or other conditions from which the vehicle cannot be driven out under its own power.
- Avoid towing a vehicle heavier than the vehicle doing the towing.
- The drivers of both vehicles should communicate with each other frequently.

⚠ CAUTION

- ***Attach a towing strap to the tow hook.***
- ***Using a portion of the vehicle other than the tow hooks for towing may damage the body of your vehicle.***
- ***Use only a cable or chain specifically intended for use in towing vehicles. Securely fasten the cable or chain to the towing hook provided.***

- Before emergency towing, check if the hook is not broken or damaged.
- Fasten the towing cable or chain securely to the hook.
- Do not jerk the hook. Apply it steadily and with even force.
- To avoid damaging the hook, do not pull from the side or at a vertical angle. Always pull straight ahead.

⚠ WARNING

Use extreme caution when towing the vehicle.

- **Avoid sudden starts or erratic driving maneuvers which would place excessive stress on the emergency towing hook and towing cable or chain. The hook and towing cable or chain may break and cause serious injury or damage.**
- **If the disabled vehicle is unable to be moved, do not forcibly continue the towing. We recommend that you contact an authorized Kia dealer or a commercial tow truck service for assistance.**
- **Tow the vehicle as straight ahead as possible.**
- **Keep away from the vehicle during towing.**

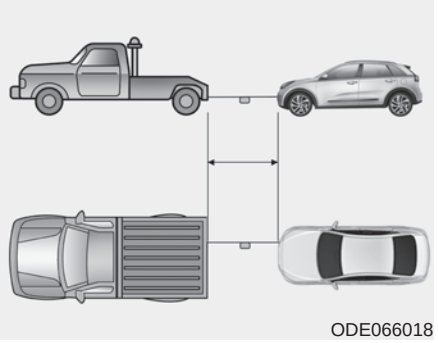

- Use a towing strap less than 5 m (16 feet) long. Attach a white or red cloth (about 30 cm (12 inches) wide) in the middle of the strap for easy visibility.
- Drive carefully so that the towing strap is not loosened during towing.

Emergency towing precautions

- Turn the ignition switch to ACC so the steering wheel isn't locked.
- Place the transaxle shift lever in N (Neutral).
- Release the parking bake.
- Press the brake pedal with more force than normal since you will have reduced brake performance.
- More steering effort will be required because the power steering system will be disabled.
- If you are driving down a long hill, the brakes may overheat and brake performance will be reduced. Stop often and let the brakes cool off.

⚠ CAUTION - Dual clutch transmission

- ***If the car is being towed with all four wheels on the ground, it can be towed only from the front. Be sure that the transaxle is in neutral. Be sure the steering is unlocked by placing the ignition switch in the ACC position. A driver must be in the towed vehicle to operate the steering and brakes.***
- ***To avoid serious damage to the dual clutch transmission, limit the vehicle speed to 15 km/h (10 mph) and drive less than 1.5 km (1 mile) when towing.***
- ***Before towing, check the dual clutch transmission for fluid leaks under your vehicle. If the dual clutch transmission fluid is leaking, flatbed equipment or a towing dolly must be used.***

EMERGENCY COMMODITY (IF EQUIPPED)

There are some emergency commodities in the vehicle to help you respond to the emergency situation.

Fire extinguisher

If there is small fire and you know how to use the fire extinguisher, take the following steps carefully.

1. Pull the pin at the top of the extinguisher that keeps the handle from being accidentally pressed.
2. Aim the nozzle toward the base of the fire.
3. Stand approximately 2.5 m (8 ft) away from the fire and squeeze the handle to discharge the extinguisher. If you release the handle, the discharge will stop.
4. Sweep the nozzle back and forth at the base of the fire. After the fire appears to be out, watch it carefully since it may re-ignite.

First aid kit

There are some items such as scissors, bandage and adhesive tape and etc. in the kit to give first aid to an injured person.

Triangle reflector

Place the triangle reflector on the road to warn oncoming vehicles during emergencies, such as when the vehicle is parked by the roadside due to any problems.

Tire pressure gauge (If equipped)

Tires normally lose some air in day-to-day use, and you may have to add a few pounds of air periodically and it is not usually a sign of a leaking tire, but of normal wear. Always check tire pressure when the tires are cold because tire pressure increases with temperature.

To check the tire pressure, take the following steps;

1. Unscrew the inflation valve cap that is located on the rim of the tire.
2. Press and hold the gauge against the tire valve. Some air will escape as you begin and more will escape if you don't press the gauge in firmly.
3. A firm non-leaking push will activate the gauge.
4. Read the tire pressure on the gauge to know whether the tire pressure is low or high.
5. Adjust the tire pressures to the specified pressure. Refer to “Tires and wheels” in section 9.
6. Reinstall the inflation valve cap.

Maintenance

Engine compartment 8-4
Maintenance services 8-5
• Owner's responsibility 8-5
• Owner maintenance precautions 8-5
Owner maintenance 8-7
• Owner maintenance schedule 8-7
Scheduled maintenance service 8-9
• Scheduled maintenanceservice precaution 8-9
Explanation of scheduled maintenance items . . . 8-23
• Engine oil and filter. 8-23
• HSG (Hybrid starter & generator) belt 8-23
• Fuel filter (for gasoline) 8-23
• Fuel lines, fuel hoses and connections 8-23
• Vapor hose (for gasoline engine) and fuel filler cap. 8-23
• Vacuum crankcase ventilation hoses 8-24
• Air cleaner filter 8-24
• Spark plugs 8-24
• Cooling system 8-24
• Coolant (Engine / Inverter) 8-24
• Dual clutch transmission fluid 8-24
• Brake hoses and lines 8-25
• Brake fluid 8-25
• Parking brake 8-25
• Brake discs, pads, calipers and rotors. 8-25
• Suspension mounting bolts. 8-25
• Steering gear box, linkage & boots/lower arm ball joint 8-25
• Drive shafts and boots. 8-25
• Air conditioning refrigerant. 8-25
Engine oil. 8-26
• Checking the engine oil level 8-26
• Changing the engine oil and filter 8-27
Engine Coolant 8-28
• Checking the coolant level 8-28
• Engine coolant 8-29
• Inverter coolant 8-30
• Recommended coolant 8-30
• Changing the coolant 8-32
Brake fluid 8-33
• Checking the brake fluid level 8-33
Engine clutch actuator fluid 8-34
• Checking the engine clutch actuator fluid level 8-34
Washer fluid 8-36
• Checking the washer fluid level 8-36
Parking brake 8-37
• Checking the parking brake. 8-37
Air cleaner. 8-38
• Filter replacement 8-38

Climate control air filter 8-40
• Filter inspection 8-40
Wiper blades 8-42
• Blade inspection 8-42
• Blade replacement 8-42
Battery 8-46
• For best battery service 8-46
• Battery capacity label 8-48
• Battery recharging 8-48
• Reset items 8-49
Tires and wheels 8-50
• Tire care 8-50
• Recommended cold tire inflation pressures 8-50
• Checking tire inflation pressure 8-51
• Tire rotation 8-52
• Wheel alignment and tire balance 8-53
• Tire replacement 8-54
• Wheel replacement 8-55
• Tire traction 8-56
• Tire maintenance 8-56
• Tire sidewall labeling 8-56
• Low aspect ratio tire 8-60
Fuses 8-62
• Inner panel fuse replacement 8-63
• Engine compartment fuse replacement 8-65
• Fuse/relay panel description 8-67
Light bulbs 8-81
• Bulb replacement precaution 8-81
• Light bulb position (Front) 8-83
• Light bulb position (Rear) 8-83
• Light bulb position (Side) 8-84
• Headlamp (HID type) bulb replacement 8-84
• Headlamp (High/Low beam) bulb replacement 8-85
• Front turn signal lamp bulb replacement 8-86
• Fog lamp/DRL bulb replacement 8-87
• Stop and tail lamp bulb replacement 8-87
• Tail lamp (inside) bulb replacement 8-88
• Stop and tail lamp (LED type) bulb replacement . . 8-89
• Back-up lamp bulb replacement 8-90
• High mounted stop lamp bulb replacement 8-90
• License plate lamp bulb replacement 8-90
• Side repeater lamp (LED type) bulb replacement . . 8-91
• Map lamp bulb replacement 8-91
• Vanity mirror lamp bulb replacement 8-92
• Room lamp bulb replacement 8-92
• Tailgate room lamp bulb replacement 8-93
• Headlamp and front fog lamp aiming (for Europe) . . 8-94

Appearance care 8-100
- Exterior care 8-100
- Interior care 8-106

Emission control system 8-108
- Crankcase emission control system 8-108
- Evaporative emission control system 8-108
- Exhaust emission control system 8-109

ENGINE COMPARTMENT

■ **Gasoline Engine (Kappa 1.6 GDI)**

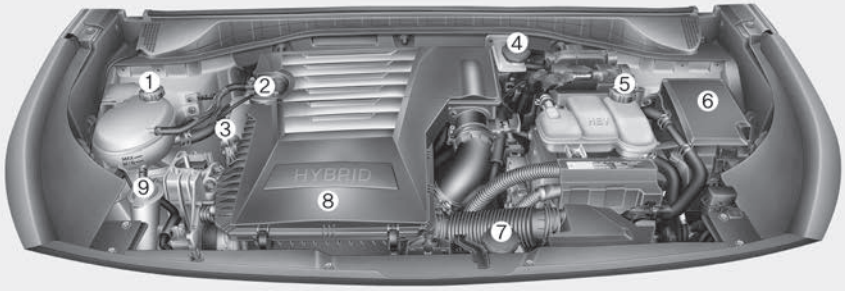

1. Engine coolant reservoir
2. Engine oil filler cap
3. Engine oil dipstick
4. Brake fluid reservoir
5. Inverter coolant reservoir
6. Fuse box
7. Engine clutch actuator reservoir tank
8. Air cleaner
9. Windshield washer fluid reservoir

❊ The actual engine room in the vehicle may differ from the illustration.

ODE076001

MAINTENANCE SERVICES

You should exercise the utmost care to prevent damage to your vehicle and injury to yourself whenever performing any maintenance or inspection procedures.

Inadequate, incomplete or insufficient servicing may result in operational problems with your vehicle that could lead to vehicle damage, an accident, or personal injury.

Owner’s responsibility

✻ NOTICE

Maintenance Service and Record Retention are the owner's responsibility.

Have your vehicle serviced by a professional workshop. Kia recommends to visit an authorized Kia dealer/service partner.

You should retain documents that show proper maintenance has been performed on your vehicle in accordance with the scheduled maintenance service charts shown on the following pages.

You need this information to establish your compliance with the servicing and maintenance requirements of your vehicle warranties.

Detailed warranty information is provided in your Warranty & Maintenance book.

Repairs and adjustments required as a result of improper maintenance or a lack of required maintenance are not covered when your vehicle is covered by warranty.

Owner maintenance precautions

Improper or incomplete service may result in problems. This section gives instructions only for the maintenance items that are easy to perform.

✻ NOTICE

Improper owner maintenance during the warranty period may affect warranty coverage. For details, read the separate Warranty & Maintenance book provided with the vehicle. If you're unsure about any servicing or maintenance procedure, have the system serviced by a professional workshop. Kia recommends to visit an authorized Kia dealer/service partner.

⚠ WARNING
- Maintenance work

- **Performing maintenance work on a vehicle can be dangerous. You can be seriously injured while performing some maintenance procedures. If you lack sufficient knowledge and experience or the proper tools and equipment to do the work, have the system serviced by a professional workshop. Kia recommends to visit an authorized Kia dealer/service partner.**
- **Working under the hood with the engine running is dangerous. It becomes even more dangerous when you wear jewelry or loose clothing. These can become entangled in moving parts and result in injury.**

(Continued)

(Continued)

Therefore, if you must run the engine while working under the hood, make certain that you remove all jewelry (especially rings, bracelets, watches, and necklaces) and all neckties, scarves, and similar loose clothing before getting near the engine or cooling fans.

⚠ CAUTION

- ***Do not put heavy objects or apply excessive force on top of the engine cover or fuel related parts.***
- ***When you inspect the fuel system (fuel lines and fuel injection devices), contact a professional workshop. Kia recommends to visit an authorized Kia dealer/service partner.***

(Continued)

(Continued)

- ***Do not drive long time with the engine cover removed.***
- ***When checking the engine room, do not go near fire.***

  Fuel, washer fluid, etc. are flammable oils that may cause fire.
- ***Before touching the battery, ignition cables and electrical wiring, you should disconnect the battery "-" terminal. You may get an electric shock from the electric current.***
- ***When you remove the interior trim cover with a flat bed (-) driver, be careful not to damage the cover.***
- ***Be careful when you replace and clean bulbs to avoid burns or electrical shock.***

OWNER MAINTENANCE

The following lists are vehicle checks and inspections that should be performed at the frequencies indicated to help ensure safe, dependable operation of your vehicle.

Any adverse conditions should be brought to the attention of your dealer as soon as possible.

These Owner Maintenance Checks are generally not covered by warranties and you may be charged for labor, parts and lubricants used.

Owner maintenance schedule

When you stop for fuel:

- Check the engine oil level.
- Check the coolant level in the coolant reservoir.
- Check the windshield washer fluid level.
- Look for low or under-inflated tires.

⚠ WARNING

Be careful when checking your engine coolant level when the engine is hot. Scalding hot coolant and steam may blow out under pressure. This could cause burns or other serious injury.

While operating your vehicle:

- Note any changes in the sound of the exhaust or any smell of exhaust fumes in the vehicle.
- Check for vibrations in the steering wheel. Notice any increased steering effort or looseness in the steering wheel, or change in its straight-ahead position.
- Notice if your vehicle constantly turns slightly or “pulls” to one side when traveling on smooth, level road.
- When driving, listen and check for unusual sounds, pulling to one side, increased brake pedal travel or “hard-to-push” brake pedal.
- If any slipping or changes in the operation of your transaxle occurs, check the transaxle fluid level.
- Check the dual clutch transmission P (Park) function.
- Check the parking brake.
- Check for fluid leaks under your vehicle (water dripping from the air conditioning system during or after use is normal).

At least monthly:

- Check the coolant level in the engine coolant reservoir.
- Check the operation of all exterior lights, including the stoplights, turn signals and hazard warning flashers.
- Check the inflation pressures of all tires including the spare.

At least twice a year (i.e., every Spring and Fall):

- Check the radiator, heater and air conditioning hoses for leaks or damage.
- Check the windshield washer spray and wiper operation. Clean the wiper blades with clean cloth dampened with washer fluid.
- Check the headlight alignment.
- Check the muffler, exhaust pipes, shields and clamps.
- Check the lap/shoulder belts for wear and function.
- Check for worn tires and loose wheel lug nuts.

At least once a year:

- Clean the body and door drain holes.
- Lubricate the door hinges and checks, and hood hinges.
- Lubricate the door and hood locks and latches.
- Lubricate the door rubber weatherstrips.
- Check the air conditioning system.
- Inspect and lubricate the automatic transaxle linkage and controls.
- Clean the battery and terminals.
- Check the brake fluid level.

SCHEDULED MAINTENANCE SERVICE

Scheduled maintenance service precaution

Follow the Normal Maintenance Schedule if the vehicle is usually operated where none of the following conditions apply. If any of the following conditions apply, follow the Maintenance Under Severe Usage Conditions.

- Repeated driving short distance of less than 8 km (5 miles) in normal temperature or less than 16 km(10 miles) in freezing temperature
- Extensive engine idling or low speed driving for long distances
- Driving on rough, dusty, muddy, unpaved, graveled or salt-spread roads
- Driving in areas using salt or other corrosive materials or in very cold weather
- Driving in heavy dust condition
- Driving in heavy traffic area
- Driving on uphill, downhill, or mountain road repeatedly
- Towing a trailer or using a camper, or roof rack
- Driving as a patrol car, taxi, other commercial use of vehicle towing
- Driving over 170 km/h (106 mile/h)
- Frequently driving in stop-and-go condition

If your vehicle is operated under the above conditions, you should inspect, replace or refill more frequently than the following Normal Maintenance Schedule. After the periods or distance shown in the chart, continue to follow the prescribed maintenance intervals.

Normal Maintenance Schedule - For Gasoline Engine [For Europe (Except Russia)]

The following maintenance services must be performed to ensure good emission control and performance. Keep receipts for all vehicle emission services to protect your warranty.Where both mileage and time are shown, the frequency of service is determined by whichever occurs first.

NO.	ITEM	REMARK
*1	Coolant (Engine / Inverter)	When adding coolant, use only deionized water or soft water for your vehicle and never mix hard water in the coolant filled at the factory. An improper coolant mixture can result in serious malfunction or engine damage.
*2	Engine oil and engine oil filter	Check the engine oil level and leak every 500 km (350 miles) or before starting a long trip.
*3	Fuel additives (Gasoline)	Kia recommends that you use unleaded gasoline which has an octane rating of RON (Research Octane Number) 95 / AKI (Anti Knock Index) 91 or higher (for Europe) or Octane Rating of RON (Research Octane Number) 91 / AKI (Anti-Knock Index) 87 or higher (except Europe). For customers who do not use good quality gasolines including fuel additives regularly, and have problems starting or the engine does not run smoothly, one bottle of additives added to the fuel tank at every 15,000 km (10,000 miles) (for Europe, Australia and New Zealand)/ 10,000 km (6,500 miles) (except Europe, Australia and New Zealand). Additives are available from a professional workshop along with information on how to use them. Kia recommends to visit an authorized Kia dealer/service partner. Do not mix other additives.

NO.	ITEM	REMARK
*4	HSG (Hybrid Starter & Generator) belt	Inspect HSG belt for evidence of cuts, crocks, excessive wear or oil saturation and replace if necessary. If drive belt noise occurred, readjust drive belt tension before replace.
*5	Spark plug	For your convenience, it can be replaced prior to it's interval when you do maintenance of other items.
*6	Dual clutch transmission (DCT) fluid	Dual clutch transmission (DCT) fluid should be changed anytime it has been submerged in water.

MAINTENANCE INTERVALS / MAINTENANCE ITEM		Normal Maintenance Schedule - For Gasoline Engine [For Europe (Except Russia)]							
		Number of months or driving distance, whichever comes first							
	Months	12	24	36	48	60	72	84	96
	Miles×1,000	10	20	30	40	50	60	70	80
	Km×1,000	15	30	45	60	75	90	105	120
Engine oil and engine oil filter *2		R	R	R	R	R	R	R	R
Coolant (Engine / Inverter) *1		At first, Replace 210,000 km (140,000 miles) or 120 months after that, Replace every 30,000 km (20,000 miles) or 24 months							
HSG (Hybrid Starter & Generator) belt *4		I	I	I	I	I	I	R	I
Vacuum hoses and crankcase ventilation hoses		I	I	I	I	I	I	I	I
Spark plugs *5	Kappa 1.6 GDI	Replace every 150,000 km (100,000 miles) or 120 months							
Dual clutch transmission (DCT) fluid *6					I				I
Engine clutch actuator fluid		I	R	I	R	I	R	I	R
Engine clutch actuator hose and line		I	I	I	I	I	I	I	I
Drive shaft and boots			I		I		I		I
Fuel additives *3		Add every 15,000 km (10,000 miles) or 12 months							
Fuel lines, hoses and connections					I				I
Fuel tank air filter					I				I
Vapor hose and fuel filler cap					I				I
Air cleaner filter		I	I	R	I	I	R	I	I
Air cleaner rubber packing		I	I	I	I	I	I	I	I

I : Inspect and if necessary, adjust, correct, clean or replace. R : Replace or change.

MAINTENANCE INTERVALS / MAINTENANCE ITEM	Normal Maintenance Schedule - For Gasoline Engine [For Europe (Except Russia)]							
	Number of months or driving distance, whichever comes first							
	Months	**12**	**24**	**36**	**48**	**60**	**72**	**84**	**96**
	Miles×1,000	**10**	**20**	**30**	**40**	**50**	**60**	**70**	**80**
	Km×1,000	**15**	**30**	**45**	**60**	**75**	**90**	**105**	**120**
Exhaust system			I		I		I		I
Cooling system	At first, Inspect 60,000 km (40,000 miles) or 48months after that, Inspect every 30,000 km (20,000 miles) or 24 months							
Air conditioner compressor/refrigerant (if equipped)	I	I	I	I	I	I	I	I
Climate control air filter		R		R		R		R
Brake lines, hoses and connections	I	I	I	I	I	I	I	I
Brake fluid	I	R	I	R	I	R	I	R
Parking brake		I		I		I		I
Steering gear rack, linkage and boots	I	I	I	I	I	I	I	I
Tire (pressure & tread wear)	I	I	I	I	I	I	I	I
Suspension ball joints	I	I	I	I	I	I	I	I
Battery condition	I	I	I	I	I	I	I	I
Brake discs and pads	I	I	I	I	I	I	I	I

I : Inspect and if necessary, adjust, correct, clean or replace. R : Replace or change.

Maintenance Under Severe Usage Conditions - For Gasoline Engine [For Europe (Except Russia)]

MAINTENANCE ITEM	MAINTENANCE OPERATION	MAINTENANCE INTERVALS	DRIVING CONDITION
Engine oil and engine oil filter	R	Every 7,500 km (5,000 miles) or 6 months	A, B, C, D, E, F, G, H, I, J, K, L
HSG (Hybrid Starter & Generator) belt	R	Every 45,000 km (30,000 miles) or 24 months	C, D, E, L
	I	Every 7,500 km (5,000 miles) or 6 months	C, D, E, L
Air cleaner filter	R	Replace more frequently depending on the condition	C, E
Spark plugs	R	Replace more frequently depending on the condition	B, H, I, L
Dual clutch transmission (DCT) fluid	R	Every 120,000 km (80,000 miles)	C, D, E, F, G, H, I, K
Steering gear rack, linkage and boots	I	Inspect more frequently depending on the condition	C, D, E, F, G
Suspension ball joints	I	Inspect more frequently depending on the condition	C, D, E, F, G
Brake discs and pads, calipers and rotors	I	Inspect more frequently depending on the condition	C, D, E, G, H

MAINTENANCE ITEM	MAINTENANCE OPERATION	MAINTENANCE INTERVALS	DRIVING CONDITION
Parking brake	I	Inspect more frequently depending on the condition	C, D, G, H
Drive shaft and boots	I	Inspect more frequently depending on the condition	C, D, E, F, G, H, I, K
Climate control air filter	R	Replace more frequently depending on the condition	C, E, G

Maintenance operation

I : Inspect and if necessary, adjust, correct, clean or replace.

R : Replace or change.

SEVERE DRIVING CONDITIONS

A : Repeatedly driving short distance of less than 8 km (5miles) in normal temperature or less than 16 km (10 miles) in freezing temperature.
B : Extensive engine idling or low speed driving for long distances.
C : Driving on rough, dusty, muddy, unpaved, graveled or salt-spread roads.
D : Driving in areas using salt or other corrosive materials or in very cold weather
E : Driving in heavy dust condition
F : Driving in heavy traffic area
G : Driving on uphill, downhill, or mountain roads.
H : Towing a trailer or using a camper on roof rack.
I : Driving for patrol car, taxi, commercial car or vehicle towing.
J : Driving in very cold weather.
K : Driving over 170 km/h (106 mile/h).
L : Frequently driving in stop-and-go conditions.

Normal Maintenance Schedule - For Gasoline Engine [Except Europe (Including Russia)]

The following maintenance services must be performed to ensure good emission control and performance. Keep receipts for all vehicle emission services to protect your warranty.Where both mileage and time are shown, the frequency of service is determined by whichever occurs first.

NO.	ITEM	REMARK
*1	Coolant (Engine / Inverter)	When adding coolant, use only deionized water or soft water for your vehicle and never mix hard water in the coolant filled at the factory. An improper coolant mixture can result in serious malfunction or engine damage.
*2	Engine oil and engine oil filter	Check the engine oil level and leak every 500 km (350 miles) or before starting a long trip.
*3	Fuel additives (Gasoline)	Kia recommends that you use unleaded gasoline which has an octane rating of RON (Research Octane Number) 95 / AKI (Anti Knock Index) 91 or higher (for Europe) or Octane Rating of RON (Research Octane Number) 91 / AKI (Anti-Knock Index) 87 or higher (except Europe). For customers who do not use good quality gasolines including fuel additives regularly, and have problems starting or the engine does not run smoothly, one bottle of additives added to the fuel tank at every 15,000 km (10,000 miles) (for Europe, Australia and New Zealand)/ 10,000 km (6,500 miles) (except Europe, Australia and New Zealand). Additives are available from a professional workshop along with information on how to use them. Kia recommends to visit an authorized Kia dealer/service partner. Do not mix other additives.

NO.	ITEM	REMARK
*4	HSG (Hybrid Starter & Generator) belt	Inspect HSG belt for evidence of cuts, crocks, excessive wear or oil saturation and replace if necessary. If drive belt noise occurred, readjust drive belt tension before replace.
*5	Spark plug	For your convenience, it can be replaced prior to it's interval when you do maintenance of other items.
*6	Dual clutch transmission (DCT) fluid	Dual clutch transmission (DCT) fluid should be changed anytime it has been submerged in water.

MAINTENANCE INTERVALS / MAINTENANCE ITEM		Normal Maintenance Schedule - For Gasoline Engine [Except Europe (Including Russia)]							
		Number of months or driving distance, whichever comes first							
	Months	12	24	36	48	60	72	84	96
	Miles×1,000	10	20	30	40	50	60	70	80
	Km×1,000	15	30	45	60	75	90	105	120
Engine oil and engine oil filter *2	For Middle East,India, Central & South America	Replace every 10,000 km (6,500 miles) or 12 months							
	Except Middle East,India, Central & South America	R	R	R	R	R	R	R	R
Coolant (Engine / Inverter) *1		At first, Replace 210,000 km (140,000 miles) or 120 months after that, Replace every 30,000 km (20,000 miles) or 24 months							
HSG (Hybrid Starter & Generator) belt *4		Except Middle East, Brazil : Inspect every 15,000 km (10,000 miles) or 12 months, and replace every 105,000km (70,000 miles) or 48 months For Middle East : Inspect every 10,000 km (6,500 miles) or 12 months, and replace every 50,000km (30,000 miles) or 24 months							
Vacuum hoses and crankcase ventilation hoses		I	I	I	I	I	I	I	I
Spark plugs *5	Kappa 1.6 GDI	Replace every 150,000 km (100,000 miles) or 120 months							
Dual clutch transmission (DCT) fluid *6					I				I
Engine clutch actuator fluid		Replace every 40,000 km (26,000 miles) or 24 months							
Engine clutch actuator hose and line		I	I	I	I	I	I	I	I
Drive shaft and boots		I	I	I	I	I	I	I	I

I : Inspect and if necessary, adjust, correct, clean or replace. R : Replace or change.

MAINTENANCE INTERVALS / MAINTENANCE ITEM		Normal Maintenance Schedule - For Gasoline Engine [Except Europe (Including Russia)]							
		Number of months or driving distance, whichever comes first							
	Months	12	24	36	48	60	72	84	96
	Miles×1,000	10	20	30	40	50	60	70	80
	Km×1,000	15	30	45	60	75	90	105	120
Fuel additives (Gasoline) *3		Add every 10,000 km (6,500 miles) or 6 months							
Fuel filter	For China, Brazil		I		R		I		R
Fuel lines, hoses and connections					I				I
Fuel tank air filter			I		R		I		R
Vapor hose and fuel filler cap					I				I
Air cleaner filter	Except China, India, Middle East	I	I	R	I	I	R	I	I
	For China, India, Middle East	R	R	R	R	R	R	R	R
Exhaust system			I		I		I		I
Cooling system		At first, Inspect 60,000 km (40,000 miles) or 48months after that, Inspect every 30,000 km (20,000 miles) or 24 months							
Air conditioner compressor/refrigerant (if equipped)		I	I	I	I	I	I	I	I
Climate control air filter	Except Australia and New Zealand	R	R	R	R	R	R	R	R
	For Australia and New Zealand	I	R	I	R	I	R	I	R
Air cleaner rubber packing		I	I	I	I	I	I	I	I

I : Inspect and if necessary, adjust, correct, clean or replace. R : Replace or change.

MAINTENANCE INTERVALS / MAINTENANCE ITEM	Normal Maintenance Schedule - For Gasoline Engine [Except Europe (Including Russia)]							
	Number of months or driving distance, whichever comes first							
	Months	12	24	36	48	60	72	84	96
	Miles×1,000	10	20	30	40	50	60	70	80
	Km×1,000	15	30	45	60	75	90	105	120
Brake lines, hoses and connections		I	I	I	I	I	I	I	I
Brake fluid		I	R	I	R	I	R	I	R
Parking brake			I		I		I		I
Steering gear rack, linkage and boots		I	I	I	I	I	I	I	I
Tire (pressure & tread wear)		I	I	I	I	I	I	I	I
Suspension ball joints		I	I	I	I	I	I	I	I
Battery condition		I	I	I	I	I	I	I	I
Brake discs and pads		I	I	I	I	I	I	I	I

I : Inspect and if necessary, adjust, correct, clean or replace. R : Replace or change.

Maintenance Under Severe Usage Conditions
- For Gasoline Engine [Except Europe (Including Russia)]

MAINTENANCE ITEM		MAINTENANCE OPERATION	MAINTENANCE INTERVALS	DRIVING CONDITION
Engine oil and engine oil filter	For Middle East,India, Central&South America	R	Every 5,000 km (3,000 miles) or 6 months	A, B, C, D, E, F, G, H, I, J, K, L
	Except Middle East,India, Central&South America	R	Every 7,500 km (5,000 miles) or 6 months	A, B, C, D, E, F, G, H, I, J, K, L
HSG (Hybrid Starter & Generator) belt	For Middle East	R	Every 30,000 km (20,000 miles) or 12 months	C, D, E, L
		I	Every 5,000 km (3,000 miles) or 6 months	C, D, E, L
	Except Middle East, Brazil	R	Every 45,000 km (30,000 miles) or 24 months	C, D, E, L
		I	Every 7,500 km (5,000 miles) or 6 months	C, D, E, L
Air cleaner filter		R	Replace more frequently depending on the condition	C, E
Spark plugs		R	Replace more frequently depending on the condition	B, H, I, L
Dual clutch transmission (DCT) fluid		R	Every 120,000 km (80,000 miles)	C, D, E, F, G, H, I, K
Steering gear rack, linkage and boots		I	Inspect more frequently depending on the condition	C, D, E, F, G

MAINTENANCE ITEM	MAINTENANCE OPERATION	MAINTENANCE INTERVALS	DRIVING CONDITION
Suspension ball joints	I	Inspect more frequently depending on the condition	C, D, E, F, G
Brake discs and pads, calipers and rotors	I	Inspect more frequently depending on the condition	C, D, E, G, H
Parking brake	I	Inspect more frequently depending on the condition	C, D, G, H
Drive shaft and boots	I	Inspect more frequently depending on the condition	C, D, E, F, G, H, I, K
Climate control air filter	R	Replace more frequently depending on the condition	C, E, G

Maintenance operation

I : Inspect and if necessary, adjust, correct, clean or replace.

R : Replace or change.

SEVERE DRIVING CONDITIONS

A : Repeatedly driving short distance of less than 8 km (5miles) in normal temperature or less than 16 km (10 miles) in freezing temperature.
B : Extensive engine idling or low speed driving for long distances.
C : Driving on rough, dusty, muddy, unpaved, graveled or salt-spread roads.
D : Driving in areas using salt or other corrosive materials or in very cold weather
E : Driving in heavy dust condition
F : Driving in heavy traffic area
G : Driving on uphill, downhill, or mountain roads.
H : Towing a trailer or using a camper on roof rack.
I : Driving for patrol car, taxi, commercial car or vehicle towing.
J : Driving in very cold weather.
K : Driving over 170 km/h (106 mile/h).
L : Frequently driving in stop-and-go conditions.

EXPLANATION OF SCHEDULED MAINTENANCE ITEMS

Engine oil and filter

The engine oil and filter should be changed at the intervals specified in the maintenance schedule. If the vehicle is being driven in severe conditions, more frequent oil and filter changes are required.

HSG (Hybrid starter & generator) belt

The HSG belt should be changed at the intervals specified in the maintenance schedule.

Fuel filter (for gasoline)

Kia gasoline vehicle is equipped a lifetime fuel filter that integrated with the fuel tank. Regular maintenance or replacement is not needed but depends on fuel quality. If there are some important safety matters like fuel flow restriction, surging, loss of power, hard starting problem etc, fuel filter inspection or replace is needed.

Have the fuel filter inspected or replaced by a professional workshop. Kia recommends to visit an authorized Kia dealer/service partner.

Fuel lines, fuel hoses and connections

Check the fuel lines, fuel hoses and connections for leakage and damage. Have the fuel lines, fuel hoses and connections replaced by a professional workshop. Kia recommends to visit an authorized Kia dealer/service partner.

Vapor hose (for gasoline engine) and fuel filler cap

The vapor hose and fuel filler cap should be inspected at those intervals specified in the maintenance schedule. Make sure that a new vapor hose or fuel filler cap is correctly replaced.

Vacuum crankcase ventilation hoses (if equipped)

Inspect the surface of hoses for evidence of heat and/or mechanical damage. Hard and brittle rubber, cracking, tears, cuts, abrasions, and excessive swelling indicate deterioration. Particular attention should be paid to examine those hose surfaces nearest to high heat sources, such as the exhaust manifold.
Inspect the hose routing to assure that the hoses do not come in contact with any heat source, sharp edges or moving component which might cause heat damage or mechanical wear. Inspect all hose connections, such as clamps and couplings, to make sure they are secure, and that no leaks are present. Hoses should be replaced immediately if there is any evidence of deterioration or damage.

Air cleaner filter

Have the air cleaner filter replaced by a professional workshop. Kia recommends to visit an authorized Kia dealer/service partner.

Spark plugs

Make sure to install new spark plugs of the correct heat range.

⚠ WARNING

Do not disconnect and inspect spark plugs when the engine is hot. You may burn yourself.

Cooling system

Check the cooling system components, such as the radiator, coolant reservoir, hoses and connections for leakage and damage. Replace any damaged parts.

Coolant (Engine / Inverter)

The coolant should be changed at the intervals specified in the maintenance schedule.

Dual clutch transmission fluid

Inspect the dual clutch transmission fluid according to the maintenance schedule.

Brake hoses and lines

Visually check for proper installation, chafing, cracks, deterioration and any leakage. Replace any deteriorated or damaged parts immediately.

Brake fluid

Check the brake fluid level in the brake fluid reservoir. The level should be between “MIN” and “MAX” marks on the side of the reservoir. Use only hydraulic brake fluid conforming to DOT 3 or DOT 4 specification.

Parking brake

Inspect the parking brake system including the parking brake lever (or pedal) and cables.

Brake discs, pads, calipers and rotors

Check the pads for excessive wear, discs for run out and wear, and calipers for fluid leakage.

For more information on checking the pads or lining wear limit, we recommend to refer to the Kia web site.

(https://www.kia-hotline.com)

Suspension mounting bolts

Check the suspension connections for looseness or damage. Retighten to the specified torque.

Steering gear box, linkage & boots/lower arm ball joint

With the vehicle stopped and engine off, check for excessive free-play in the steering wheel.

Check the linkage for bends or damage. Check the dust boots and ball joints for deterioration, cracks, or damage. Replace any damaged parts.

Drive shafts and boots

Check the drive shafts, boots and clamps for cracks, deterioration, or damage. Replace any damaged parts and, if necessary, repack the grease.

Air conditioning refrigerant

Check the air conditioning lines and connections for leakage and damage.

ENGINE OIL

Checking the engine oil level

■ Gasoline Engine (Kappa 1.6L-GDI)

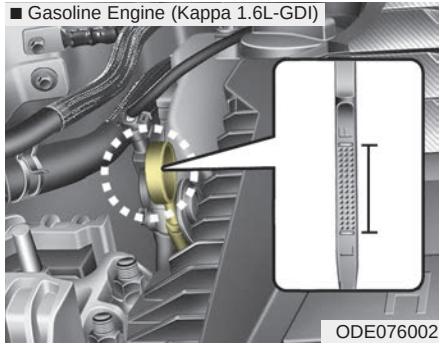

ODE076002

1. Be sure the vehicle is on level ground.
2. Start the engine and allow it to reach normal operating temperature.
3. Turn the engine off and wait for a few minutes (about 5 minutes) for the oil to return to the oil pan.
4. Pull the dipstick out, wipe it clean, and re-insert it fully.

⚠ WARNING - Radiator hose

Be very careful not to touch the radiator hose when checking or adding the engine oil as it may be hot enough to burn you.

5. Pull the dipstick out again and check the level. The level should be between F (Full) and L (Low).

⚠ CAUTION

- ***Do not overfill the engine oil. It may damage the engine.***
- ***Do not spill engine oil, when adding or changing engine oil. If you drop the engine oil on the engine room, wipe it off immediately.***
- ***When you wipe the oil level gauge, you should wipe it with a clean cloth. When mixed with debris, it can cause engine damage.***

■ Gasoline Engine (Kappa 1.6L-GDI)

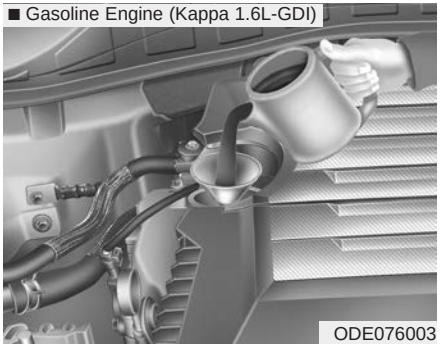

If it is near or at L (Low), add enough oil to bring the level to F (Full). **Do not overfill.**

Use a funnel to help prevent oil from being spilled on engine components.

Use only the specified engine oil. (Refer to "Recommended lubricants and capacities" in chapter 9.)

Changing the engine oil and filter

Have the engine oil and filter replaced by a professional workshop. Kia recommends to visit an authorized Kia dealer/service partner.

⚠ WARNING

Used engine oil may cause skin irritation or cancer if left in contact with the skin for prolonged periods of time. Used engine oil contains chemicals that have caused cancer in laboratory animals. Always protect your skin by washing your hands thoroughly with soap and warm water as soon as possible after handling used oil.

ENGINE COOLANT

The high-pressure cooling system has a reservoir filled with year round antifreeze coolant. The reservoir is filled at the factory.

Check the antifreeze protection and coolant level at least once a year, at the beginning of the winter season, and before traveling to a colder climate.

⚠ CAUTION

- ***When the engine overheats from low engine coolant, suddenly adding engine coolant may cause cracks in the engine. To prevent damage, add engine coolant slowly in small quantities.***
- ***Do not drive with no engine coolant. It may cause water pump failure and engine seizure, etc.***

Checking the coolant level

⚠ WARNING

Removing radiator cap

- **Never attempt to remove the radiator cap while the engine is operating or hot. Doing so might lead to cooling system and engine damage. Also, hot coolant or steam could cause serious personal injury.**
- **Turn the engine off and wait until it cools down. Use extreme care when removing the radiator cap. Wrap a thick towel around it, and turn it counterclockwise slowly to the first stop. Step back while the pressure is released from the cooling system.**

(Continued)

(Continued)

When you are sure all the pressure has been released, press down on the cap, using a thick towel, and continue turning counterclockwise to remove it.

- **Even if the engine is not operating, do not remove the radiator cap or the drain plug while the engine and radiator are hot. Hot coolant and steam may still blow out under pressure, causing serious injury.**

⚠ WARNING

The electric motor (cooling fan) is controlled by engine coolant temperature, refrigerant pressure and vehicle speed. It may sometimes operate even when the engine is not running. Use extreme caution when working near the blades of the cooling fan so that you are not injured by a rotating fan blades. As the engine coolant temperature decreases, the electric motor will automatically shut off. This is a normal condition.

If your vehicle is equipped with GDI, the electric motor (cooling fan) may operate until you disconnect the negative battery cable.

Engine coolant

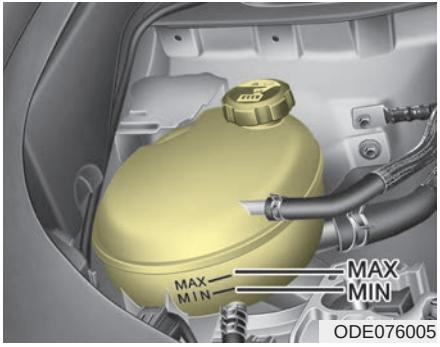

ODE076005

Check the condition and connections of all cooling system hoses and heater hoses. Replace any swollen or deteriorated hoses.

The coolant level should be filled between MAX and MIN marks on the side of the coolant reservoir when the engine is cool.

If the coolant level is low, add enough specified coolant to provide protection against freezing and corrosion. Bring the level to MAX, but do not overfill. If frequent additions are required, have the system inspected by a professional workshop. Kia recommends to visit an authorized Kia dealer/service partner.

Inverter coolant

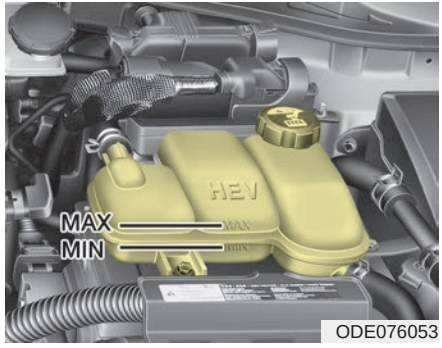

ODE076053

Check the condition and connections of all cooling system hoses and heater hoses. Replace any swollen or deteriorated hoses.

The coolant level should be filled between MAX and MIN marks on the side of the coolant reservoir when the engine is cool.

If the coolant level is low, add enough specified coolant to provide protection against freezing and corrosion. Bring the level to MAX, but do not overfill. If frequent additions are required, have the system inspected by a professional workshop. Kia recommends to visit an authorized Kia dealer/service partner.

Recommended coolant

- When adding coolant, use only deionized water or soft water for your vehicle and never mix hard water in the coolant filled at the factory. An improper coolant mixture can result in serious malfunction or engine damage.
- The engine in your vehicle has aluminum engine parts and must be protected by an ethylene-glycol with phosphate based coolant to prevent corrosion and freezing.
- DO NOT USE alcohol or methanol coolant or mix them with the specified coolant.
- Do not use a solution that contains more than 60% antifreeze or less than 35% antifreeze, which would reduce the effectiveness of the solution.

For mixture percentage, refer to the following table.

Ambient Temperature	Mixture Percentage (volume)	
	Antifreeze	Water
-15°C (5°F)	35	65
-25°C (-13°F)	40	60
-35°C (-31°F)	50	50
-45°C (-49°F)	60	40

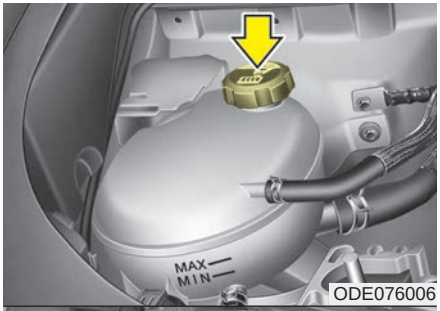

ODE076006

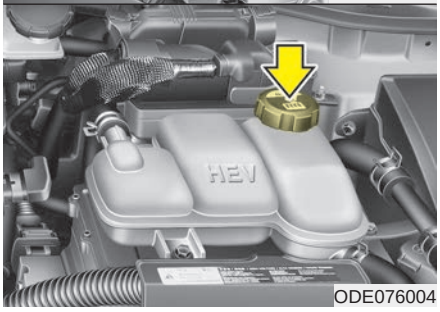

ODE076004

⚠ WARNING

Radiator cap

Do not remove the radiator cap when the engine and radiator are hot. Scalding hot coolant and steam may blow out under pressure causing serious injury.

Changing the coolant

Have the coolant replaced by a professional workshop. Kia recommends to visit an authorized Kia dealer/service partner.

⚠ CAUTION

Put a thick cloth around the radiator cap before refilling the coolant in order to prevent the coolant from overflowing into engine parts such as the alternator.

⚠ WARNING - Coolant

- **Do not use radiator coolant or antifreeze in the washer fluid reservoir.**
- **Radiator coolant can severely obscure visibility when sprayed on the windshield and may cause loss of vehicle control or damage the paint and body trim.**

BRAKE FLUID

Checking the brake fluid level

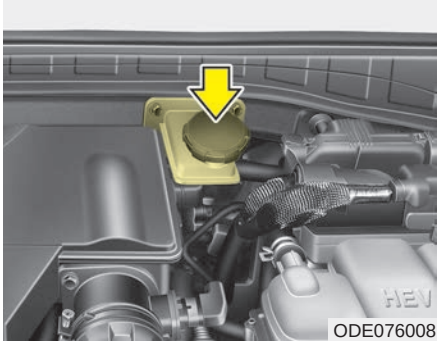

ODE076008

Check the fluid level in the reservoir periodically. The fluid level should be between MAX and MIN marks on the side of the reservoir.

Before removing the reservoir cap and adding brake fluid, clean the area around the reservoir cap thoroughly to prevent brake fluid contamination.

If the level is low, add fluid to the MAX level. The level will fall with accumulated mileage. This is a normal condition associated with the wear of the brake linings.

If the fluid level is excessively low, have the system checked by a professional workshop. Kia recommends to visit an authorized Kia dealer/service partner.

Use only the specified brake fluid. (Refer to “Recommended lubricants or capacities” in chapter 9.)

Never mix different types of fluid.

⚠ WARNING
- Loss of brake fluid

In the event the brake system requires frequent additions of fluid, have the system inspected by a professional workshop. Kia recommends to visit an authorized Kia dealer/service partner.

⚠ WARNING - Brake fluid

When changing and adding brake fluid, handle it carefully. Do not let it come in contact with your eyes. If brake fluid should come in contact with your eyes, immediately flush them with a large quantity of fresh tap water. Have your eyes examined by a doctor as soon as possible.

⚠ CAUTION

Do not allow brake fluid to contact the vehicle's body paint, as paint damage will result. Brake fluid, which has been exposed to open air for an extended time should never be used as its quality cannot be guaranteed. It should be properly disposed. Don't put in the wrong kind of fluid. A few drops of mineral-based oil, such as engine oil, in your brake system can damage brake system parts.

ENGINE CLUTCH ACTUATOR FLUID

Checking the engine clutch actuator fluid level

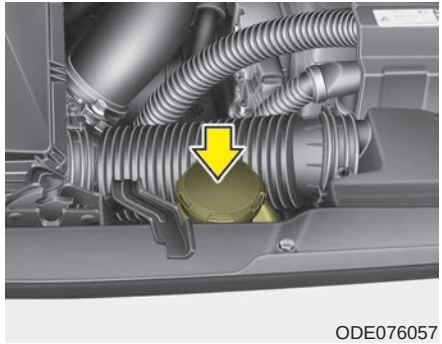
ODE076057

In normal driving conditions, the actuator fluid level does not go down rapidly. However, oil consumption rate may rise as vehicle mileage increases, and leakage in actuator related parts may result in increased consumption of the engine clutch actuator oil. Regularly check and make sure the engine clutch actuator oil fluid level is between MIN and MAX marks.

If the oil level is below MIN mark, have the vehicle checked by a professional workshop.

Kia recommends to visit an authorized Kia dealer/service partner.

If the fluid level is excessively low, have the system checked by a professional workshop. Kia recommends to visit an authorized Kia dealer/service partner.

Use only the specified engine clutch actuator fluid.

(Refer to “Recommended lubricants or capacities” in chapter 9.)

Never mix different types of fluid.

⚠ WARNING
- Loss of engine clutch actuator fluid

In the event the engine clutch actuator requires frequent additions of fluid, have the system inspected by a professional workshop. Kia recommends to visit an authorized Kia dealer/service partner.

⚠ WARNING - Engine clutch actuator fluid

When changing and adding engine clutch actuator fluid, handle it carefully. Do not let it come in contact with your eyes. If engine clutch actuator fluid should come in contact with your eyes, immediately flush them with a large quantity of fresh tap water. Have your eyes examined by a doctor as soon as possible.

⚠ CAUTION

Do not allow engine clutch actuator fluid to contact the vehicle's body paint, as paint damage will result. The engine clutch actuator fluid, which has been exposed to open air for an extended time should never be used as its quality cannot be guaranteed. It should be properly disposed. Don't put in the wrong kind of fluid. A few drops of mineral-based oil, such as engine oil, in your engine clutch actuator system can damage engine clutch actuator system parts.

WASHER FLUID

Checking the washer fluid level

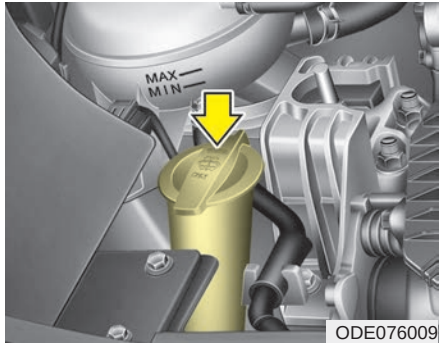

ODE076009

The reservoir is translucent so that you can check the level with a quick visual inspection.

Check the fluid level in the washer fluid reservoir and add fluid if necessary. Plain water may be used if washer fluid is not available. However, use washer solvent with antifreeze characteristics in cold climates to prevent freezing.

⚠ WARNING - Coolant

- **Do not use radiator coolant or antifreeze in the washer fluid reservoir.**
- **Radiator coolant can severely obscure visibility when sprayed on the windshield and may cause loss of vehicle control or damage to paint and body trim.**
- **Windshield Washer fluid agents contain some amounts of alcohol and can be flammable under certain circumstances. Do not allow sparks or flame to contact the washer fluid or the washer fluid reservoir. Damage to the vehicle or occupants could occur.**
- **Windshield washer fluid is poisonous to humans and animals. Do not drink and avoid contacting windshield washer fluid. Serious injury or death could occur.**

PARKING BRAKE

Checking the parking brake

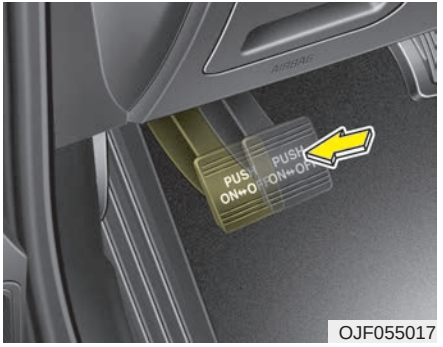

OJF055017

Check whether the stroke is within specification when the parking brake pedal is depressed with 20 kg (44 lbs, 196 N) of force. Also, the parking brake alone should securely hold the vehicle on a fairly steep grade. If the stroke is more or less than specified, have the system serviced by a professional workshop. Kia recommends to visit an authorized Kia dealer/service partner.

Stroke : 4~5 notch

AIR CLEANER

Filter replacement

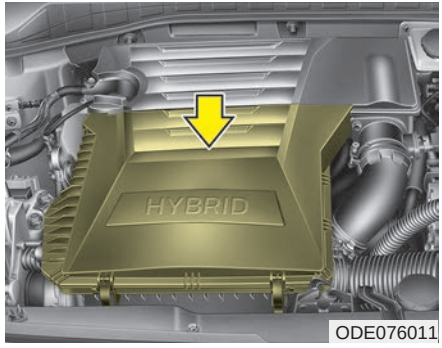

ODE076011

It must be replaced when necessary, and should not be washed.

You can clean the filter when inspecting the air cleaner element.

Clean the filter by using compressed air.

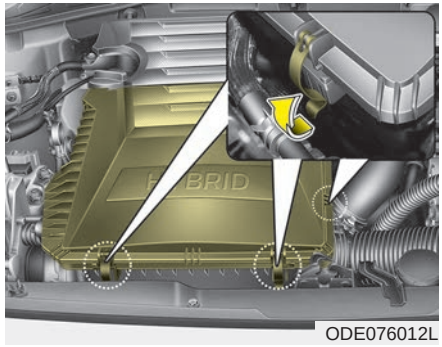
ODE076012L

1. Loosen the air cleaner cover attaching clips and open the cover.

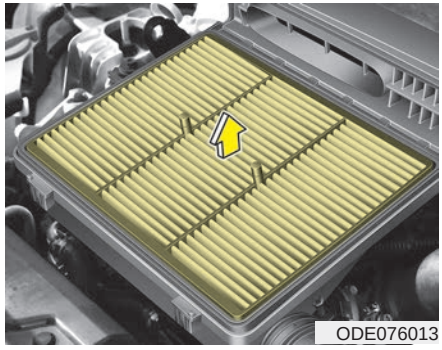
ODE076013

2. Wipe the inside of the air cleaner.
3. Replace the air cleaner filter.
4. Lock the cover with the cover attaching clips.

Replace the filter according to the Maintenance Schedule.

If the vehicle is operated in extremely dusty or sandy areas, replace the element more often than the usual recommended intervals. (Refer to “Maintenance under severe usage conditions” in this chapter.)

⚠ CAUTION

- ***Do not drive with the air cleaner removed; this will result in excessive engine wear.***
- ***When removing the air cleaner filter, be careful that dust or dirt does not enter the air intake, or damage may result.***
- ***Use parts for replacement from a professional workshop. Kia recommends to visit an authorized Kia dealer/service partner.***

CLIMATE CONTROL AIR FILTER

Filter inspection

The climate control air filter should be replaced according to the maintenance schedule. If the vehicle is operated in severely air-polluted cities or on dusty rough roads for a long period, it should be inspected more frequently and replaced earlier. When you replace the climate control air filter, replace it performing the following procedure, and be careful to avoid damaging other components.

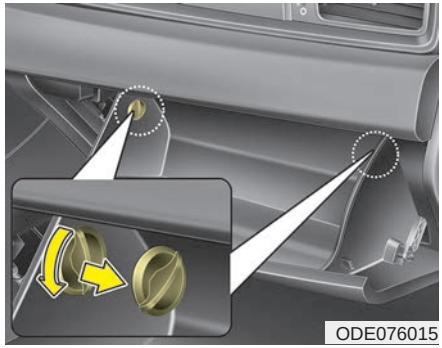

1. Open the glove box and remove the stoppers on both sides.

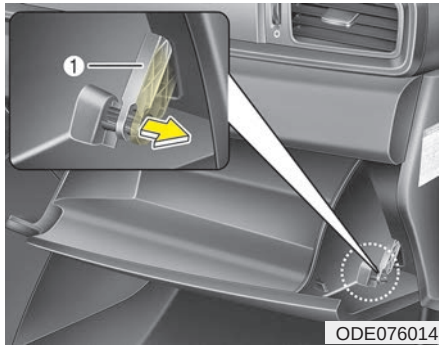

2. With the glove box open, pull the support strap (1).

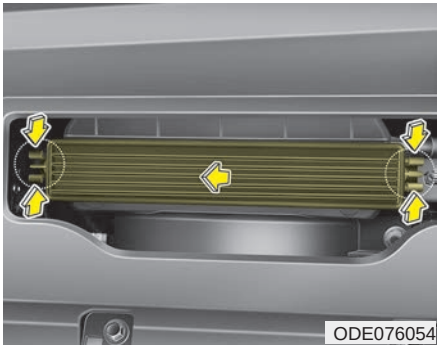

3. Remove the climate control air filter cover while pressing the lock on the both sides of the cover.

4. Replace the climate control air filter.
5. Reassemble in the reverse order of disassembly.

✻ NOTICE

When replacing the climate control air filter install it properly. Otherwise, the system may produce noise and the effectiveness of the filter may be reduced.

WIPER BLADES

Blade inspection

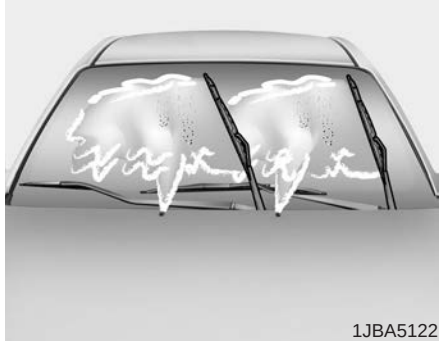

✻ NOTICE

Commercial hot waxes applied by automatic car washes have been known to make the windshield difficult to clean.

Contamination of either the windshield or the wiper blades with foreign matter can reduce the effectiveness of the windshield wipers. Common sources of contamination are insects, tree sap, and hot wax treatments used by some commercial car washes. If the blades are not wiping properly, clean both the window and the blades with a good cleaner or mild detergent, and rinse thoroughly with clean water.

⚠ CAUTION

To prevent damage to the wiper blades, do not use gasoline, kerosene, paint thinner, or other solvents on or near them.

Blade replacement

When the wipers no longer clean adequately, the blades may be worn or cracked, and require replacement.

⚠ CAUTION

To prevent damage to the wiper arms or other components, do not attempt to move the wipers manually.

⚠ CAUTION

The use of a non-specified wiper blade could result in wiper malfunction and failure.

Front windshield wiper blade

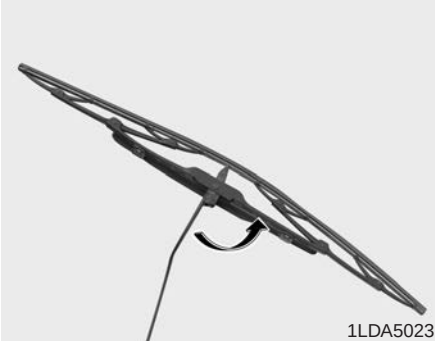
1LDA5023

Type A

1. Raise the wiper arm and turn the wiper blade assembly to expose the plastic locking clip.

⚠ CAUTION

Do not allow the wiper arm to fall against the windshield, since it may chip or crack the windshield.

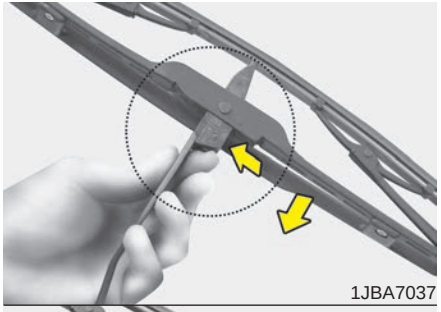
1JBA7037

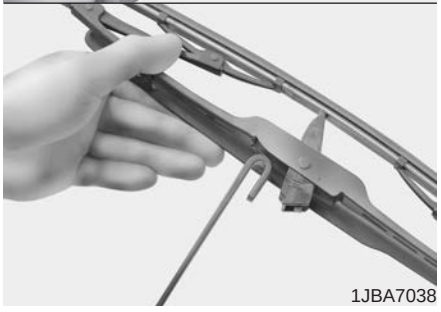
1JBA7038

2. Compress the clip and slide the blade assembly downward.
3. Lift it off the arm.
4. Install the blade assembly in the reverse order of removal.

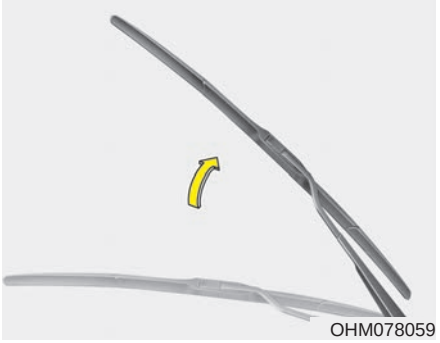
OHM078059

Type B

1. Raise the wiper arm.

⚠ CAUTION

Do not allow the wiper arm to fall against the windshield, since it may chip or crack the windshield.

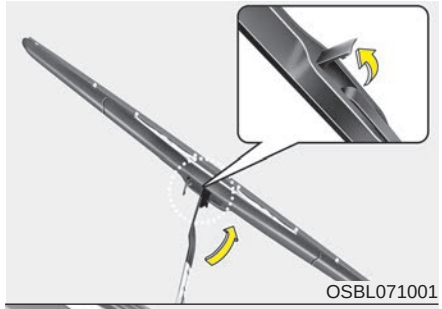

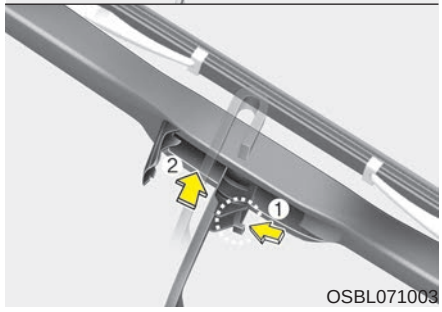

2. Turn the wiper blade clip. Then lift up the blade clip.
3. Push the clip (1) and push up the wiper arm (2).

4. Push down the wiper arm (3) and install the new blade assembly in the reverse order of removal.
5. Return the wiper arm on the windshield.

Rear window wiper blade

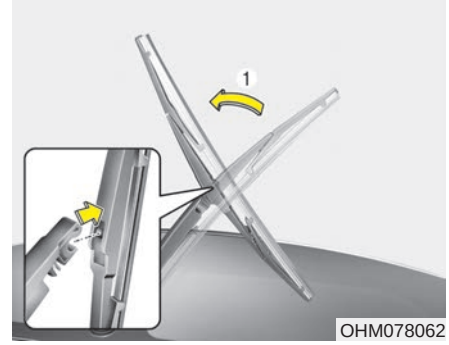

1. Raise the wiper arm and pull out the wiper blade assembly.

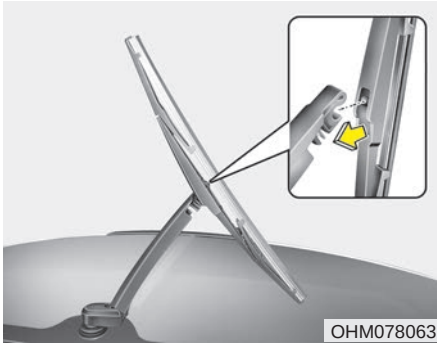

2. Install the new blade assembly by inserting the center part into the slot in the wiper arm until it clicks into place.
3. Make sure the blade assembly is installed firmly by trying to pull it slightly.

To prevent damage to the wiper arms or other components, have the wiper blade replaced by a professional workshop. Kia recommends to visit an authorized Kia dealer/service partner.

BATTERY

For best battery service

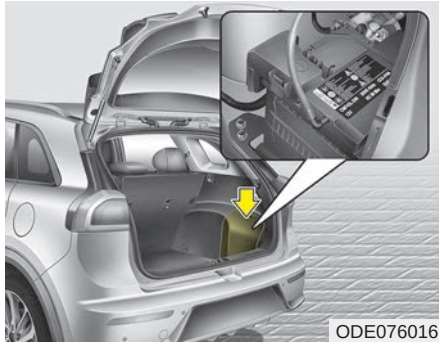

- Keep the battery securely mounted.
- Keep the battery top clean and dry.
- Keep the terminals and connections clean, tight, and coated with petroleum jelly or terminal grease.
- Rinse any spilled electrolyte from the battery immediately with a solution of water and baking soda.
- If the vehicle is not going to be used for an extended time, disconnect the battery cables.

✻ NOTICE

Basically equipped battery is maintenance free type. If your vehicle is equipped with the battery marked with LOWER and UPPER on the side, you can check the electrolyte level. The electrolyte level should be between LOWER and UPPER. If the electrolyte level is low, it needs to add distilled (demineralized) water (Never add sulfuric acid or other electrolyte). When refill, be careful not to splash the battery and adjacent components. And do not overfill the battery cells. It can cause corrosion on other parts. After then ensure that tighten the cell caps. Contact a professional workshop. Kia recommends to visit an authorized Kia dealer/service partner.

⚠ WARNING - Battery dangers

Always read the following instructions carefully when handling a battery.

Keep lighted cigarettes and all other flames or sparks away from the battery.

Hydrogen, a highly combustible gas, is always present in battery cells and may explode if ignited.

Keep batteries out of the reach of children because batteries contain highly corrosive SULFURIC ACID. Do not allow battery acid to contact your skin, eyes, clothing or paint finish.

(Continued)

(Continued)

If any electrolyte gets into your eyes, flush your eyes with clean water for at least 15 minutes and get immediate medical attention.

If electrolyte gets on your skin, thoroughly wash the contacted area. If you feel pain or burning sensation, get medical attention immediately.

Wear eye protection when charging or working near a battery. Always provide ventilation when working in an enclosed space.

An inappropriately disposed battery can be harmful to the environment and human health. Dispose the battery according to your local law(s) or regulation.

(Continued)

(Continued)

The battery contains lead. Do not dispose of it after use. Contact a professional workshop. Kia recommends to visit an authorized Kia dealer/service partner.

- **When lifting a plastic-cased battery, excessive pressure on the case may cause battery acid to leak, resulting in personal injury. Lift with a battery carrier or with your hands on opposite corners.**
- **Never attempt to recharge the battery when the battery cables are connected.**
- **The electrical ignition system works with high voltage. Never touch these components with the engine running or the ignition switched on.**

Failure to follow the above warnings can result in serious bodily injury or death.

⚠ CAUTION

- ***When you don't use the vehicle for a long time in the low temperature area, separate the battery and keep it indoors.***
- ***Always charge the battery fully to prevent battery case damage in low temperature area.***
- ***If you connect unauthorized electronic devices to the battery, the battery may be discharged. Never use unauthorized devices.***

Battery capacity label

■ Example

OUM074113L

❊ The actual battery label in the vehicle may differ from the illustration.

1. AGM90L-DIN : The Kia model name of battery
2. 90Ah(20HR) : The nominal capacity (in Ampere hours)
3. 170RC : The nominal reserve capacity (in min.)
4. 12V : The nominal voltage
5. 850CCA (SAE) : The cold-test current in amperes by SAE
6. 680A : The cold-test current in amperes by EN

Battery recharging

Your vehicle has a maintenance-free, calcium-based battery.

- If the battery becomes discharged in a short time (because, for example, the headlights or interior lights were left on while the vehicle was not in use), recharge it by slow charging (trickle) for 10 hours.
- If the battery gradually discharges because of high electric load while the vehicle is being used, recharge it at 20-30A for two hours.

⚠ WARNING - Recharging battery

When recharging the battery, observe the following precautions:

- **The battery must be removed from the vehicle and placed in an area with good ventilation.**
- **Do not allow cigarettes, sparks, or flame near the battery.**
- **Watch the battery during charging, and stop or reduce the charging rate if the battery cells begin gassing (boiling) violently or if the temperature of the electrolyte of any cell exceeds 49°C (120°F).**
- **Wear eye protection when checking the battery during charging.**

(Continued)

(Continued)

- **Disconnect the battery charger in the following order.**
  1. **Turn off the battery charger main switch.**
  2. **Unhook the negative clamp from the negative battery terminal.**
  3. **Unhook the positive clamp from the positive battery terminal.**

⚠ WARNING

- **Before performing maintenance or recharging the battery, turn off all accessories and stop the engine.**
- **The negative battery cable must be removed first and installed last when the battery is disconnected.**
- **Operation related to the battery is recommended to be done by a professional workshop. Kia recommends to visit an authorized Kia dealer/service partner.**

⚠ CAUTION

- ***Keep the battery away from water or any liquid.***
- ***For your safety, use parts for replacement from a professional workshop. Kia recommends to visit an authorized Kia dealer/service partner.***

Reset items

Items should be reset after the battery has been discharged or the battery has been disconnected.

- Auto up/down window
- Sunroof
- Trip computer
- Climate control system
- Driver position Memory System
- Audio

TIRES AND WHEELS

Tire care

For proper maintenance, safety, and maximum fuel economy, you must always maintain recommended tire inflation pressures and stay within the load limits and weight distribution recommended for your vehicle.

Recommended cold tire inflation pressures

All tire pressures (including the spare) should be checked when the tires are cold. “Cold Tires” means the vehicle has not been driven for at least three hours or driven less than 1.6 km (one mile).

Recommended pressures must be maintained for the best ride, top vehicle handling, and minimum tire wear.

For recommended inflation pressure, refer to “Tire and wheels” in chapter 9.

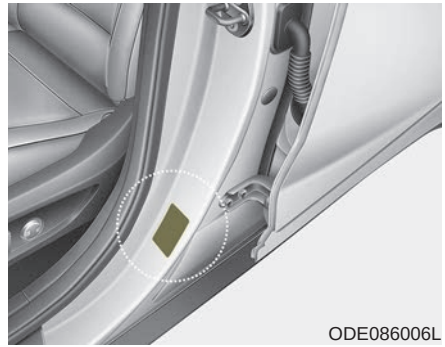

All specifications (sizes and pressures) can be found on a label attached to the vehicle.

⚠ WARNING - Tire underinflation

Severe underinflation (70 kPa (10 psi) or more) can lead to severe heat build-up, causing blowouts, tread separation and other tire failures that can result in the loss of vehicle control leading to severe injury or death. This risk is much higher on hot days and when driving for long periods at high speeds.

⚠ CAUTION

- ***Underinflation also results in excessive wear, poor handling and reduced fuel economy. Wheel deformation also is possible. Keep your tire pressures at the proper levels. If a tire frequently needs refilling, have the system checked by a professional workshop. Kia recommends to visit an authorized Kia dealer/service partner.***
- ***Overinflation produces a harsh ride, excessive wear at the center of the tire tread, and a greater possibility of damage from road hazards.***

⚠ CAUTION

- ***Warm tires normally exceed recommended cold tire pressures by 28 to 41 kPa (4 to 6 psi). Do not release air from warm tires to adjust the pressure or the tires will be underinflated.***
- ***Be sure to reinstall the tire inflation valve caps. Without the valve cap, dirt or moisture could get into the valve core and cause air leakage. If a valve cap is missing, install a new one as soon as possible.***

⚠ WARNING - Tire Inflation

Overinflation or underinflation can reduce tire life, adversely affect vehicle handling, and lead to sudden tire failure. This could result in loss of vehicle control and potential injury.

⚠ CAUTION - Tire pressure

Always observe the following:

- ***Check tire pressure when the tires are cold. (After vehicle has been parked for at least three hours or hasn't been driven more than 1.6 km (one mile) since startup.)***
- ***Check the pressure of your spare tire each time you check the pressure of other tires.***
- ***Never overload your vehicle. Be careful not to overload a vehicle luggage rack if your vehicle is equipped with one.***
- ***Worn, old tires can cause accidents. If your tread is badly worn, or if your tires have been damaged, replace them.***

Checking tire inflation pressure

Check your tires once a month or more.

Also, check the tire pressure of the spare tire.

How to check

Use a good quality gauge to check tire pressure. You can not tell if your tires are properly inflated simply by looking at them. Radial tires may look properly inflated even when they're underinflated.

Check the tire's inflation pressure when the tires are cold. - "Cold" means your vehicle has been sitting for at least three hours or driven no more than 1.6 km (1 mile).

Remove the valve cap from the tire valve stem. Press the tire gauge firmly onto the valve to get a pressure measurement. If the cold tire inflation pressure matches the recommended pressure on the tire and loading information label, no further adjustment is necessary. If the pressure is low, add air until you reach the recommended amount.

If you overfill the tire, release air by pushing on the metal stem in the center of the tire valve. Recheck the tire pressure with the tire gauge. Be sure to put the valve caps back on the valve stems. They help prevent leaks by keeping out dirt and moisture.

⚠ WARNING

- **Inspect your tires frequently for proper inflation as well as wear and damage. Always use a tire pressure gauge.**
- **Tires with too much or too little pressure wear unevenly causing poor handling, loss of vehicle control, and sudden tire failure leading to accidents, injuries, and even death. The recommended cold tire pressure for your vehicle can be found in this manual and on the tire label located on the driver's side center pillar.**
- **Worn tires can cause accidents. Replace tires that are worn, show uneven wear, or are damaged.**
- **Remember to check the pressure of your spare tire. Kia recommends that you check the spare every time you check the pressure of the other tires on your vehicle.**

Tire rotation

To equalize tread wear, it is recommended that the tires be rotated every 12,000 km (7,500 miles) or sooner if irregular wear develops.

During rotation, check the tires for correct balance.

When rotating tires, check for uneven wear and damage. Abnormal wear is usually caused by incorrect tire pressure, improper wheel alignment, out-of-balance wheels, severe braking or severe cornering. Look for bumps or bulges in the tread or side of tire. Replace the tire if you find either of these conditions. Replace the tire if fabric or cord is visible. After rotation, be sure to bring the front and rear tire pressures to specification and check lug nut tightness.

Refer to “Tire and wheels” in chapter 9.

With a full-size spare tire
(Only the vehicle without TPMS system)

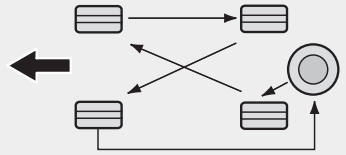

CBGO0706

Without a spare tire

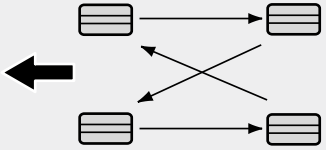

S2BLA790A

Directional tires (if equipped)

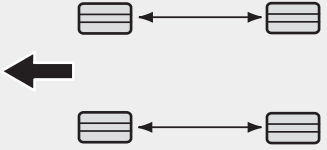

CBGQ0707A

Disc brake pads should be inspected for wear whenever tires are rotated.

✻ NOTICE

Rotate radial tires that have an asymmetric tread pattern only from front to rear and not from right to left.

⚠ WARNING

- **Do not use the compact spare tire (if equipped) for tire rotation.**
- **Do not mix bias ply and radial ply tires under any circumstances. This may cause unusual handling characteristics that could result in death, severe injury, or property damage.**

Wheel alignment and tire balance

The wheels on your vehicle were aligned and balanced carefully at the factory to give you the longest tire life and best overall performance.

In most cases, you will not need to have your wheels aligned again. However, if you notice unusual tire wear or your vehicle pulling one way or the other, the alignment may need to be reset.

If you notice your vehicle vibrating when driving on a smooth road, your wheels may need to be rebalanced.

⚠ CAUTION

Improper wheel weights can damage your vehicle's aluminum wheels. Use only approved wheel weights.

Tire replacement

If the tire is worn evenly, a tread wear Indicator (A) will appear as a solid band across the tread. This shows there is less than 1.6 mm (1/16 in.) of tread left on the tire. Replace the tire when this happens.

Do not wait for the band to appear across the entire tread before replacing the tire.

✻ NOTICE

We recommend that when replacing tires, use the same originally supplied with the vehicles.
If not, that affects driving performance.

⚠ CAUTION

When replacing the tires, recheck and tighten the wheel nuts after driving about 50km (31miles) and recheck after driving about 1,000km (620miles). If the steering wheel shakes or the vehicle vibrates while driving, the tire is out of balance. Align the tire balance. If the problem is not solved, contact a professional workshop. Kia recommends to visit an authorized Kia dealer/service partner.

⚠ WARNING - Replacing tires

To reduce the chance of serious or fatal injuries from an accident caused by tire failure or loss of vehicle control:

- **Replace tires that are worn, show uneven wear, or are damaged. Worn tires can cause loss of braking effectiveness, steering control, and traction.**
- **Do not drive your vehicle with too little or too much pressure in your tires. This can lead to uneven wear and tire failure.**
- **When replacing tires, never mix radial and bias-ply tires on the same car. You must replace all tires (including the spare) if moving from radial to bias-ply tires.**

(Continued)

(Continued)

- **Using tires and wheels other than the recommended sizes could cause unusual handling characteristics and poor vehicle control, resulting in a serious accident.**
- **Wheels that do not meet Kia's specifications may fit poorly and result in damage to the vehicle or unusual handling and poor vehicle control.**
- **The ABS works by comparing the speed of the wheels. The tire size affects wheel speed. When replacing tires, all 4 tires must use the same size originally supplied with the vehicle. Using tires of a different size can cause the ABS (Anti-lock Brake System) and ESC (Electronic Stability Control) to work irregularly.**

Compact spare tire replacement (if equipped)

A compact spare tire has a shorter tread life than a regular size tire. Replace it when you can see the tread wear indicator bars on the tire. The replacement compact spare tire should be the same size and design tire as the one provided with your new vehicle and should be mounted on the same compact spare tire wheel. The compact spare tire is not designed to be mounted on a regular size wheel, and the compact spare tire wheel is not designed for mounting a regular size tire.

Wheel replacement

When replacing the metal wheels for any reason, make sure the new wheels are equivalent to the original factory units in diameter, rim width and offset.

⚠ WARNING

A wheel that is not the correct size may adversely affect wheel and bearing life, braking and stopping abilities, handling characteristics, ground clearance, body-to-tire clearance, snow chain clearance, speedometer and odometer calibration, headlight aim and bumper height.

Tire traction

Tire traction can be reduced if you drive on worn tires, tires that are improperly inflated or on slippery road surfaces. Tires should be replaced when tread wear indicators appear. Slow down whenever there is rain, snow or ice on the road to reduce the possibility of losing control of the vehicle.

Tire maintenance

In addition to proper inflation, correct wheel alignment helps to decrease tire wear. If you find a tire is worn unevenly, have a professional workshop check the wheel alignment. Kia recommends to visit an authorized Kia dealer/service partner.

When you have new tires installed, make sure they are balanced. This will increase vehicle ride comfort and tire life. Additionally, a tire should always be rebalanced if it is removed from the wheel.

Tire sidewall labeling

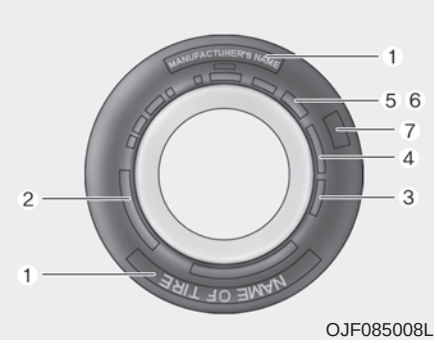

OJF085008L

This information identifies and describes the fundamental characteristics of the tire and also provides the tire identification number (TIN) for safety standard certification. The TIN can be used to identify the tire in case of a recall.

1. Manufacturer or brand name

Manufacturer or Brand name is shown.

2. Tire size designation

A tire's sidewall is marked with a tire size designation. You will need this information when selecting replacement tires for your vehicle. The following explains what the letters and numbers in the tire size designation mean.

Example tire size designation:

(These numbers are provided as an example only; your tire size designator could vary depending on your vehicle.)

P235/55R19 108T

P - Applicable vehicle type (tires marked with the prefix "P" are intended for use on passenger vehicles or light trucks; however, not all tires have this marking).

235 - Tire width in millimeters.

55 - Aspect ratio. The tire's section height as a percentage of its width.

R - Tire construction code (Radial).

19 - Rim diameter in inches.

108 - Load Index, a numerical code associated with the maximum load the tire can carry.

T - Speed Rating Symbol. See the speed rating chart in this section for additional information.

Wheel size designation

Wheels are also marked with important information that you need if you ever have to replace one. The following explains what the letters and numbers in the wheel size designation mean.

Example wheel size designation:

7.5JX19

7.5 - Rim width in inches.

J - Rim contour designation.

19 - Rim diameter in inches.

Tire speed ratings

The chart below lists many of the different speed ratings currently being used for passenger car tires. The speed rating is part of the tire size designation on the sidewall of the tire. This symbol corresponds to that tire's designed maximum safe operating speed.

Speed Rating Symbol	Maximum Speed
S	180 km/h (112 mph)
T	190 km/h (118 mph)
H	210 km/h (130 mph)
V	240 km/h (149 mph)
W	270 km/h (168 mph)
Y	300 km/h (186 mph)

3. Checking tire life (TIN : Tire Identification Number)

Any tires that are over 6 years old, based on the manufacturing date, (including the spare tire) should be replaced by new ones. You can find the manufacturing date on the tire sidewall (possibly on the inside of the wheel), displaying the DOT Code. The DOT Code is a series of numbers on a tire consisting of numbers and English letters. The manufacturing date is designated by the last four digits (characters) of the DOT code.

DOT : XXXX XXXX OOOO

The front part of the DOT means a plant code number, tire size and tread pattern and the last four numbers indicate week and year manufactured.

For example:

DOT XXXX XXXX 1617 represents that the tire was produced in the 16th week of 2017.

⚠ WARNING - Tire age

Tires degrade over time, even when they are not being used.

Regardless of the remaining tread, we recommend that tires be replaced after approximately six (6) years of normal service. Heat caused by hot climates or frequent high loading conditions can accelerate the aging process. Failure to follow this warning can result in sudden tire failure, which could lead to a loss of control and an accident involving serious injury or death.

4. Tire ply composition and material

The number of layers or plies of rubber-coated fabric in the tire. Tire manufacturers also must indicate the materials in the tire, which include steel, nylon, polyester, and others. The letter "R" means radial ply construction; the letter "D" means diagonal or bias ply construction; and the letter "B" means belted-bias ply construction.

5. Maximum permissible inflation pressure

This number is the greatest amount of air pressure that should be put in the tire. Do not exceed the maximum permissible inflation pressure. Refer to the Tire and Loading Information label for recommended inflation pressure.

6. Maximum load rating

This number indicates the maximum load in kilograms and pounds that can be carried by the tire. When replacing the tires on the vehicle, always use a tire that has the same load rating as the factory installed tire.

7. Uniform tire quality grading

Quality grades can be found where applicable on the tire sidewall between tread shoulder and maximum section width.

For example:

TREADWEAR 200

TRACTION AA

TEMPERATURE A

Tread wear

The tread wear grade is a comparative rating based on the wear rate of the tire when tested under controlled conditions on a specified government test course. For example, a tire graded 150 would wear one-and-a-half times (1½) as well on the government course as a tire graded 100.

The relative performance of tires depends upon the actual conditions of their use, however, and may depart significantly from the norm due to variations in driving habits, service practices and differences in road characteristics and climate.

These grades are molded on the side-walls of passenger vehicle tires. The tires available as standard or optional equipment on your vehicle may vary with respect to grade.

Traction - AA, A, B & C

The traction grades, from highest to lowest, are AA, A, B and C. Those grades represent the tire's ability to stop on wet pavement as measured under controlled conditions on specified government test surfaces of asphalt and concrete. A tire marked C may have poor traction performance.

Temperature -A, B & C

The temperature grades are A (the highest), B, and C, representing the tire's resistance to the generation of heat and its ability to dissipate heat when tested under controlled conditions on a specified indoor laboratory test wheel.

Sustained high temperature can cause the material of the tire to degenerate and reduce tire life, and excessive temperature can lead to sudden tire failure. Grades B and A represent higher levels of performance on the laboratory test wheel than the minimum required by law.

⚠ WARNING

The traction grade assigned to this tire is based on straight-ahead braking traction tests, and does not include acceleration, cornering, hydroplaning, or peak traction characteristics.

⚠ WARNING - Tire temperature

The temperature grade for this tire is established for a tire that is properly inflated and not overloaded. Excessive speed, underinflation, or excessive loading, either separately or in combination, can cause heat build-up and possible sudden tire failure. This can cause loss of vehicle control and serious injury or death.

Low aspect ratio tire (if equipped)

Low aspect ratio tires, whose aspect ratio is lower than 50, are provided for sporty looks.

Because the low aspect ratio tires are optimized for handling and braking, it may be more uncomfortable to ride in and there is more noise compare with normal tires.

⚠ CAUTION

Because the sidewall of the low aspect ratio tire is shorter than the normal, the wheel and tire of the low aspect ratio tire is easier to be damaged. So, follow the instructions below.

- ***When driving on a rough road or off road, drive cautiously because tires and wheels may be damaged. And after driving, inspect tires and wheels.***
- ***When passing over a pothole, speed bump, manhole, or curb stone, drive slowly so that the tires and wheels are not damaged.***
- ***If the tire is impacted, inspect the tire condition or contact a professional workshop. Kia recommends to visit an authorized Kia dealer/service partner.***
- ***To prevent damage to the tire, inspect the tire condition and pressure every 3,000km.***

⚠ CAUTION

- ***It is not easy to recognize the tire damage with your own eyes. But if there is the slightest hint of tire damage, even though you cannot see the tire damage with your own eyes, have the tire checked or replaced because the tire damage may cause air leakage from the tire.***
- ***If the tire is damaged by driving on a rough road, off road, pothole, manhole, or curb stone, it will not be covered by the warranty.***
- ***You can find out the tire information on the tire sidewall.***

FUSES

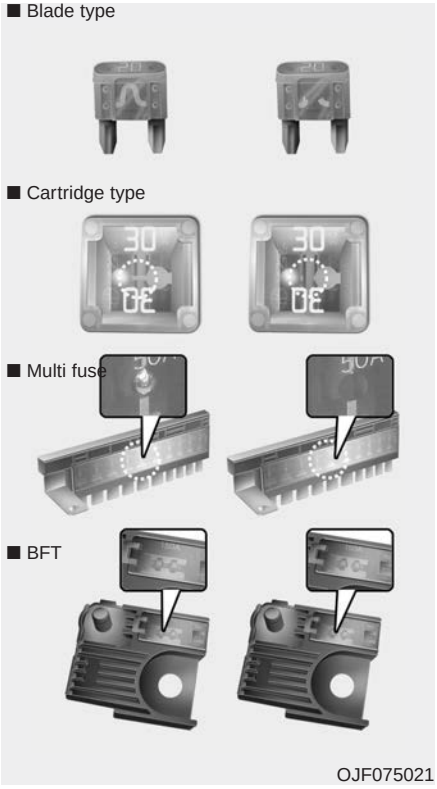

❊ Left side : Normal
Right side : Blown

A vehicle's electrical system is protected from electrical overload damage by fuses.

This vehicle has 2 (or 3) fuse panels, one located in the driver's side panel bolster, the others in the engine compartment near the battery.

If any of your vehicle's lights, accessories, or controls do not work, check the appropriate circuit fuse. If a fuse has blown, the element inside the fuse will melt. If the electrical system does not work, first check the driver's side fuse panel.

Before replacing a blown fuse, disconnect the negative battery cable.

Always replace a blown fuse with one of the same rating.

If the replacement fuse blows, this indicates an electrical problem. Avoid using the system involved and immediately consult a professional workshop. Kia recommends to consult an authorized Kia dealer/service partner.

Three kinds of fuses are used: blade type for lower amperage rating, cartridge type, and multi fuse for higher amperage ratings.

⚠ WARNING - Fuse replacement

- **Never replace a fuse with anything but another fuse of the same rating.**
- **A higher capacity fuse could cause damage and possibly a fire.**
- **Never install a wire or aluminum foil instead of the proper fuse even as a temporary repair. It may cause extensive wiring damage and a possible fire.**
- **Do not arbitrarily modify or add-on electric wiring of the vehicle.**

⚠ CAUTION

Do not use a screwdriver or any other metal object to remove fuses because it may cause a short circuit and damage the system.

❊ NOTICE

The actual fuse/relay panel label may differ from equipped items.

⚠ **CAUTION**

- ***When replacing a blown fuse or relay with a new one, make sure the new fuse or relay fits tightly into the clips. The incomplete fastening fuse or relay may cause the vehicle wiring and electric systems damage and a possible fire.***
- ***Do not remove fuses, relays and terminals fastened with bolts or nuts. The fuses, relays and terminals may be fastened incompletely, and it may cause a possible fire. If fuses, relays and terminals fastened with bolts or nuts are blown, consult a professional workshop. Kia recommends to consult an authorized Kia dealer/service partner.***

(Continued)

(Continued)

- ***Do not input any other objects except fuses or relays into fuse/relay terminals such as a driver or wiring. It may cause contact failure and system malfunction.***
- ***Do not plug in screwdrivers or aftermarket wiring into the terminal originally designed for fuse and relays only. The electrical system and wiring of the vehicle interior may be damaged or burned due to contact failure.***

Inner panel fuse replacement

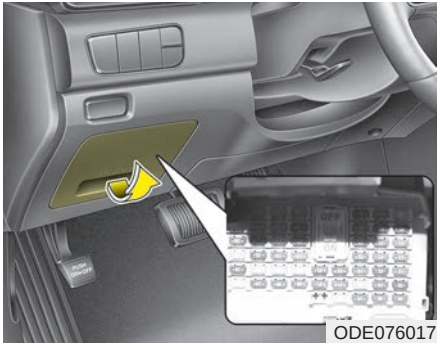

ODE076017

1. Turn the ignition switch and all other switches off.
2. Open the fuse panel cover.

If the switch is located in the “OFF”, caution will be displayed in the cluster.

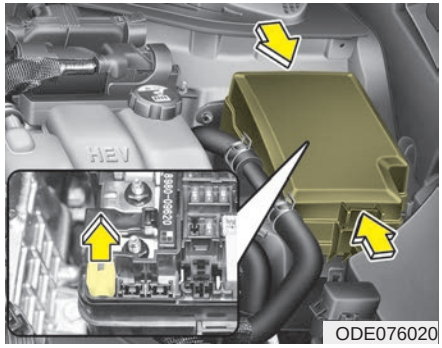

ODE076020

3. Pull the suspected fuse straight out. Use the removal tool provided in the main fuse box in the engine compartment.
4. Check the removed fuse; replace it if it is blown.

   Spare fuses are provided in the instrument panel fuse panel (or in the engine compartment fuse panel).
5. Push in a new fuse of the same rating, and make sure it fits tightly in the clips.

If it fits loosely, consult a professional workshop. Kia recommends to consult an authorized Kia dealer/service partner.

If you do not have a spare, use a fuse of the same rating from a circuit you may not need for operating the vehicle, such as the cigarette lighter fuse.

If the headlights or taillights, stoplights, courtesy lamp, day time running lights (D.R.L) do not work and the fuses are OK, check the fuse panel in the engine compartment. If a fuse is blown, it must be replaced.

Fuse switch

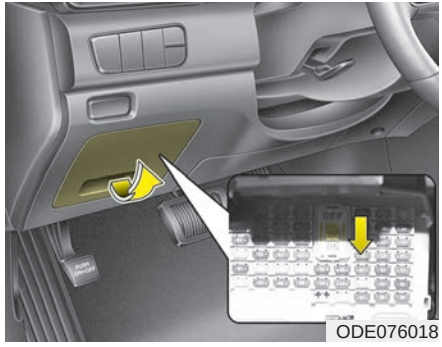
ODE076018

Always, put the fuse switch at the ON position.

If you move the switch to the OFF position, some items such as audio and digital clock must be reset and transmitter (or smart key) may not work properly.

If the fuse switch is in OFF, a warning sign will illuminate on the dashboard.

⚠ **CAUTION**

- ***Put all switches in ON when driving.***
- ***If the vehicle remains idle for over 1 month, put all switches in OFF to prevent the batteries from being discharged.***
- ***Excluding long-term parking for over 1 month, the contact points of switches may wear out upon extensive use. Please refrain from excessive use of switches.***

Engine compartment fuse replacement

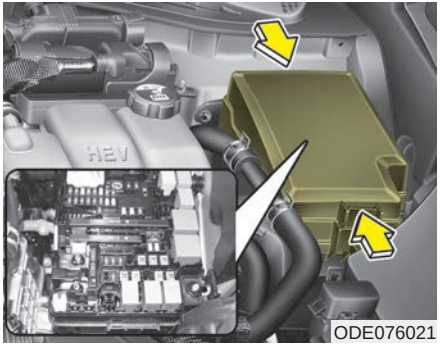

ODE076021

1. Turn the ignition switch and all other switches off.
2. Remove the fuse panel cover by pressing the tab and pulling the cover up. When the blade type fuse is disconnected, remove it by using the clip designed for changing fuses located in the engine room fuse box. Upon removal, securely insert reserve fuse of equal quantity.
3. Check the removed fuse; replace it if it is blown. To remove or insert the fuse, use the fuse puller in the engine compartment fuse panel.
4. Push in a new fuse of the same rating, and make sure it fits tightly in the clips. If it fits loosely, consult a professional workshop. Kia recommends to consult an authorized Kia dealer/service partner.

⚠ **CAUTION**

After checking the fuse panel in the engine compartment, securely install the fuse panel. If not, cover through the audible clicking sound. Electrical failures may occur from water contact.

Multi fuse

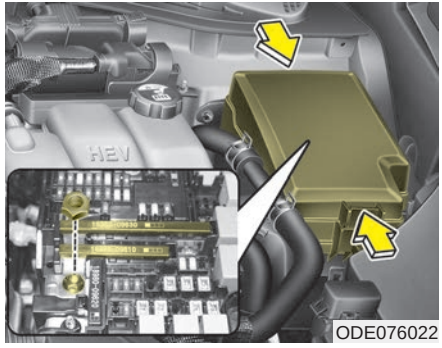

ODE076022

If the multi fuse is blown, it must be removed as follows:

1. Disconnect the negative battery cable.
2. Remove the nuts shown in the picture above.
3. Replace the fuse with a new one of the same rating.
4. Reinstall in the reverse order of removal.

✻ NOTICE

If the multi fuse is blown, consult a professional workshop. Kia recommends to consult an authorized Kia dealer/service partner.

Main fuse

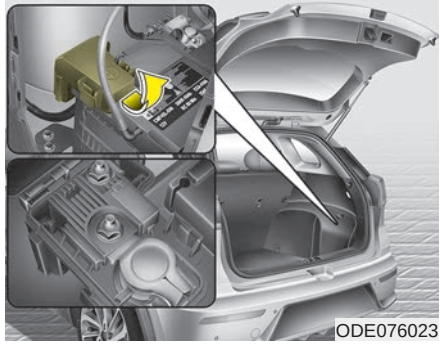
ODE076023

If the main fuse is blown, it must be removed as follows:

1. Turn off the engine.
2. Disconnect the negative battery cable.
3. Remove the nuts shown in the picture above.
4. Replace the fuse with a new one of the same rating.
5. Reinstall in the reverse order of removal

✻ NOTICE

The electronic system may not function correctly even when the engine room and internal fuse box's individual fuses are not disconnected. In such case the cause of the problem may be disconnection of the main fuse (BFT type), which is located inside the positive battery terminal (+) cap. Since the main fuse is designed more intricately than other parts, visit a professional workshop. Kia recommends to visit the nearest authorized Kia dealer/service partner.

⚠ CAUTION

Visually inspect the battery cap for secure closing. If the battery cap is not securely latched, the electrical system may be damaged to due influx of moisture into the system.

Fuse/relay panel description

■ Driver's side fuse panel

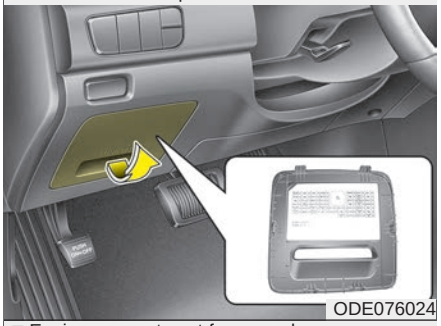

ODE076024

■ Engine compartment fuse panel

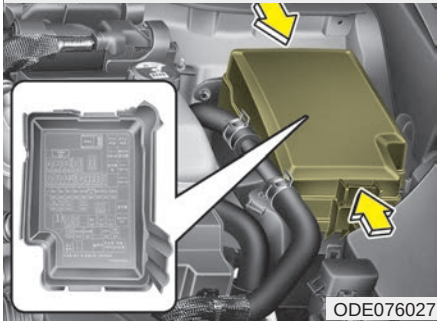

ODE076027

■ Engine compartment fuse panel
(Battery terminal cover)

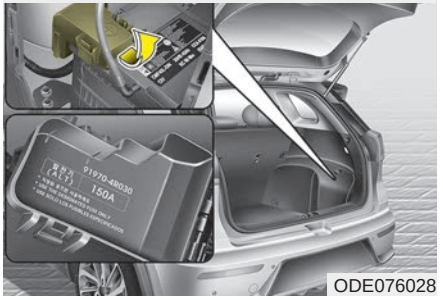

ODE076028

Inside the fuse/relay panel covers, you can find the fuse/relay label describing fuse/relay name and capacity.

✻ NOTICE

Not all fuse panel descriptions in this manual may be applicable to your vehicle. It is accurate at the time of printing. When you inspect the fuse panel in your vehicle, refer to the fuse panel label.

Driver's side fuse panel

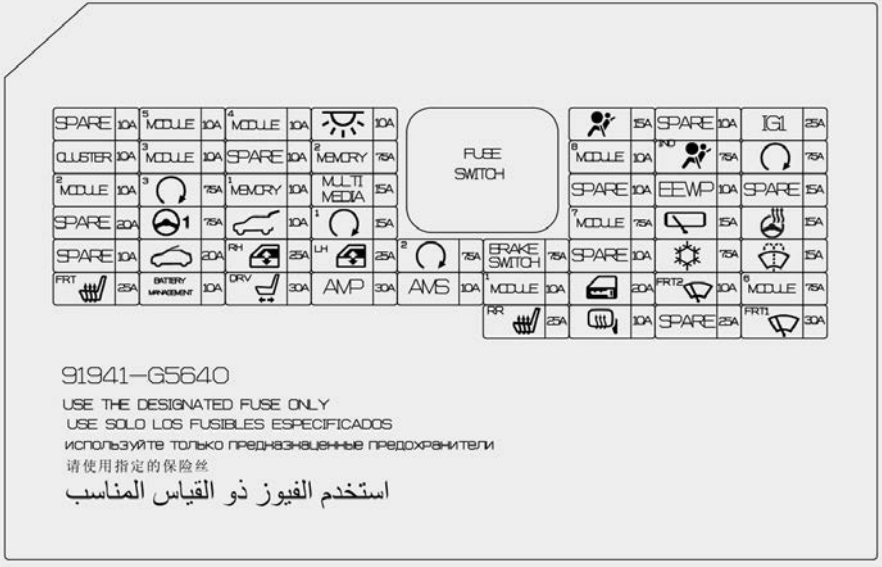

ODE076025L

Instrument panel (Driver's side fuse panel)

Fuse Name	Symbol	Fuse rating	Circuit Protected
MODULE 5	5 MODULE	10A	Crash Pad Switch, Electro Chromic Mirror, Audio / Video &Navigation Head Unit, Audio, Shift Lever Indicator, VESS Unit, Air Conditioner Control Module, Head Lamp Leveling Device Actuator LH/RH, Driver IMS Module, Front Seat Warmer Control Module, Rear Seat Warmer Control Module, Auto Head Lamp Leveling Device Module
MODULE 4	4 MODULE	10A	Lane Departure Warning Control Module, Crash Pad Switch, AEB Module, Blind Spot Detection Radar Left Handle side/Right Handle side
INTERIOR LAMP		10A	Luggage Lamp, Ignition Key ILL. & Door Warning Switch, Front Vanity Lamp LH/RH, Room Lamp, Overhead Console Lamp
A/BAG		15A	SRS (Supplemental Restraint System) Control Module
IG 1	IG1	25A	Printed Circuit Board Block (Fuse - F35, F36, F37, F38)
CLUSTER	CLUSTER	10A	Instrument Cluster
MODULE 3	3 MODULE	10A	BCM (Body Control Module), Dual clutch transmission Shift Lever, Driver/Passenger Door Module, Stop Lamp Switch, Instrument Cluster, MDPS (Motor Driven Power Steering) Unit
MEMORY 2	2 MEMORY	7.5A	Active Air Flap Unit
MODULE 8	8 MODULE	10A	Electric Water Pump (Engine), Active Air Flap Unit, VPD Sensor, E/R Junction Block (RLY. 4), BMS Control Module
A/BAG IND	IND	7.5A	Air Conditioner Control Module, Instrument Cluster
START		7.5A	[Without Smart Key & Without Immobilizer] Burglaralarm Relay [With Smart Key / With Immobilizer] Inhibitor Switch

Fuse Name	Symbol	Fuse rating	Circuit Protected
MODULE 2	2 MODULE	10A	Engine Room Junction Block (Relay. 14), Wireless Charger, BCM (Body Control Module), AMP (Amplifier), Smart Key Control Module, USB Charger, Audio, Audio / Video & Navigation Head Unit, Driver Power Outside Mirror
PDM 3	3	7.5A	[Without Smart Key] Immobilizer Module [With Smart Key] Smart Key Control Module
MEMORY 1	1 MEMORY	10A	Instrument Cluster, Wireless Charger, Air Conditioner Control Module, Auto Light & Photo Sensor, Rain Sensor, BCM (Body Control Module), ICM Relay Box (Outside Mirror Folding/Unfolding Relay), Driver Integrated memory system Module, Driver/Passenger Door Module
MULTI MEDIA	MULTI MEDIA	15A	Audio, Audio / Video & Navigation Head Unit
EEWP	EEWP	10A	Electric Water Pump (HEV)
MDPS	1	7.5A	MDPS (Motor Driven Power Steering) Unit
TAIL GATE		10A	Tail Gate Relay, ICM Relay Box (Fuel Lid Relay), Fuel Filler Switch
PDM 1	1	15A	Smart Key Control Module
MODULE 7	7 MODULE	7.5A	AC Inverter (220V), AC Inverter Module, Rear Seat Warmer Control Module, Front Seat Warmer Control Module/ Front Air Ventilation Seat Control Module
WIPER (REAR)		15A	Engine Room Junction Block (Relay.5)
HEATED STEERING		15A	BCM (Body Control Module)
SUNROOF		20A	Sunroof Motor

Fuse Name	Symbol	Fuse rating	Circuit Protected
P/WINDOW RH	RH	25A	Power Window Right Handle side Relay, Driver/Passenger Safety Power Window Module
P/WINDOW LH	LH	25A	Power Window Left Handle side Relay, Driver/Passenger Safety Power Window Module
PDM 2	2	7.5A	[Without Smart Key] Immobilizer Module [With Smart Key] Smart Key Control Module, Start/Stop Button Switch
BRAKE SWITCH	BRAKE SWITCH	7.5A	Stop Lamp Switch
A/CON		7.5A	Air Conditioner Control Module, Ionizer, Engine Room Junction Block (Relay.1/2/12), Electronic Air Conditioner Compressor
WASHER		15A	Multifunction Switch
S/HEATER (FRT)	FRT	25A	Front Seat Warmer Control Module, Front Air Ventilation Seat Control Module
BATTERY MANAGEMENT	BATTERY MANAGEMENT	10A	BMS Control Module
P/SEAT (DRV)	DRV	30A	[Without Integrated memory system] Driver Seat Manual Switch [With Integrated memory system] Driver Seat Manual Switch, Driver Integrated memory system Module
AMP	AMP	30A	AMP (Amplifier)
AMS	AMS	10A	Battery Sensor
MODULE 1	1 MODULE	10A	Data Link Connector, Hazard Switch/Key Interlock, AEB Module, Driver Door Module, Passenger Door Module, Driver Smart Key Outside Handle, Passenger Smart Key Outside Handle

Fuse Name	Symbol	Fuse rating	Circuit Protected
DOOR LOCK		20A	Door Lock/Unlock Relay, ICM Relay Box (Dead Lock Relay)
WIPER2 (FRT)	FRT2	10A	BCM (Body Control Module), ECM (Engine Control Module)
MODULE 6	6 MODULE	7.5A	BCM (Body Control Module), Smart Key Control Module
S/HEATER (REAR)	RR	25A	Rear Seat Warmer Control Module
HEATED MIRROR		10A	Air Conditioner Control Module, Driver/Passenger Power Outside Mirror
WIPER1 (FRT)	FRT1	30A	Wiper Motor, Printed Circuit Board Block (Front Wiper (Low) Relay

Engine compartment fuse panel

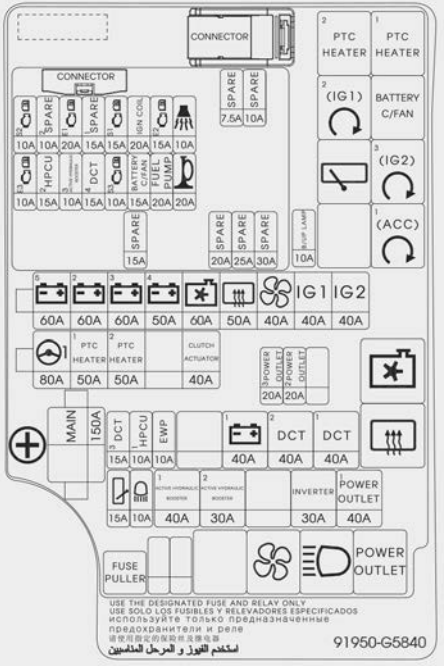

ODE076026L

Engine compartment fuse panel (Battery terminal cover)

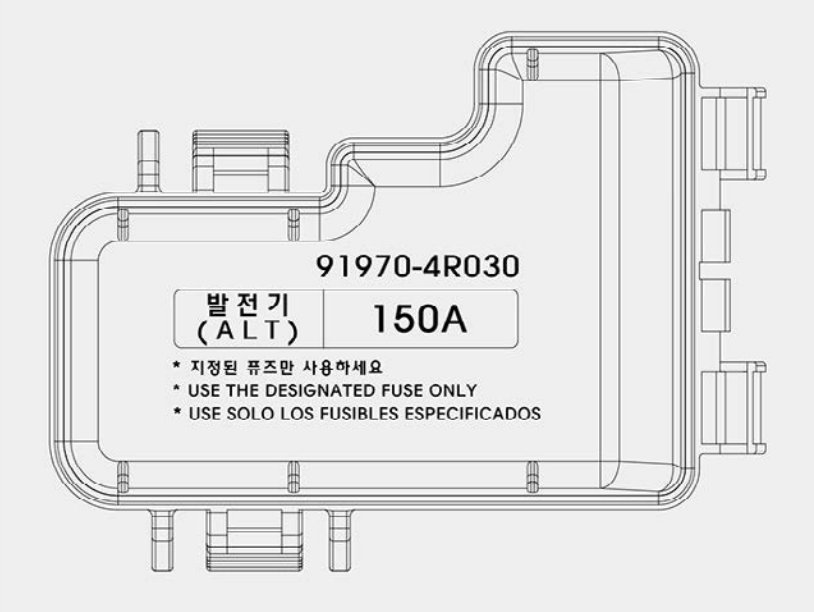

OJFH075171

Engine room compartment fuse panel

Fuse Name		Symbol	Fuse rating	Circuit Protected
MULTI FUSE	B+ 5	5	60A	Printed Circuit Board Block (Fuse - F40, F41, F42, F49, F50, Engine Control Relay)
	B+ 2	2	60A	Integrated Gateway Power control Module (Fuse - F47, ARISU(4CH), IPS(2CH), IPS(2CH))
	B+ 3	3	60A	Integrated Gateway Power control Module (ARISU(4CH), IPS(2CH), IPS(2CH), IPS(2CH))
	B+ 4	4	50A	Integrated Gateway Power control Module (Fuse - F24, F30, F31, F32, F38, F39, F40, F41, F42)
	COOLING FAN		60A	Relay.9
	REAR HEATED		40A	Relay.10
	BLOWER		40A	Relay.12
	IG 1	IG1	40A	Ignition Switch/ Engine Room Junction Block (Relay.3/8)
	IG 2	IG2	40A	Ignition Switch/ Engine Room Junction Block (Relay.6)
	MDPS	1	80A	MDPS (Motor Driven Power Steering) Unit
	PTC HEATER 1	1 PTC HEATER	50A	Relay
	PTC HEATER 2	2 PTC HEATER	50A	Relay
	CLUTCH ACTUATOR	CLUTCH ACTUATOR	40A	Clutch Actuator (HEV)
	MAIN	MAIN	150A	Fuse - F26, F27, F28, F29, F31, F32, Low Voltage DC-DC Converter

Fuse Name		Symbol	Fuse rating	Circuit Protected
FUSE	POWER OUTLET 3	3 POWER OUTLET	20A	Power Outlet #2
	POWER OUTLET 2	2 POWER OUTLET	20A	Power Outlet #1
	DCT 3	3 DCT	15A	TCM (Transmission Control Module)
	HPCU 1	1 HPCU	10A	HPCU
	EWP	EWP	10A	Electric Water Pump (Engine)
	B+ 1	1	40A	Integrated Gateway Power control Module (Fuse - F25, F33, F34, F43, F44, Leak Current Autocut Device)
	DCT 2	2 DCT	40A	TCM (Transmission Control Module)
	DCT 1	1 DCT	40A	TCM (Transmission Control Module)
	REAR WIPER		15A	Relay.5
	HEAD LAMP HI		10A	Relay.13
	AHB 1	1 ACTIVE HYDRAULIC BOOSTER	40A	Integrated Brake Actuation Unit, Multipurpose Check Connector
	AHB 2	2 ACTIVE HYDRAULIC BOOSTER	30A	Integrated Brake Actuation Unit

Fuse Name		Symbol	Fuse rating	Circuit Protected
FUSE	INVERTER	INVERTER	30A	AC Inverter Module
	POWER OUTLET1	1 POWER OUTLET	40A	Relay.14
	B/UP LAMP	B/UP LAMP	10A	Audio, Electro Chromic Mirror, Back-Up Lamp Left Handle side/Right Handle side

Circuit (PCB Block)

Fuse rating	Fuse Name	Symbol	Circuit Protected
10A	ECU 3	E3	ECU
15A	HPCU 2	2 **HPCU**	HPCU, Clutch Actuator (HEV)
10A	ACTIVE HYDRAULIC BOOTER 3	**ACTIVE HYDRAULIC BOOTER**	Integrated Brake Actuation Unit, Multipurpose Check Connector
15A	DCT 4	4 **DCT**	Dual clutch transmission Shift Lever, TCM (Transmission Control Module), Inhibitor Switch
10A	SENSOR 3	S3	Fuel Pump Relay, Oil Control Valve #1/#2 (Intake/Exhaust), Camshaft Position Sensor #1/#2 (Intake/Exhaust)
15A	BATTERY C/FAN	**BATTERY C/FAN**	Engine Room Junction Block (Relay.4)
20A	FUEL PUMP	**FUEL PUMP**	Fuel Pump Relay
20A	HORN		Horn Relay
10A	SENSOR 2	S2	Purge Control Solenoid Valve, Engine Room Junction Block (RLY.9), Mass Air Flow Sensor
20A	ECU 1	E1	ECU

Fuse rating	Fuse Name	Symbol	Circuit Protected
15A	SENSOR 1	S1	Oxygen Sensor (UP/DOWN)
20A	IGN COIL	IGN COIL	Ignition Coil #1~#4
15A	ECU 2	E2	ECM (Engine Control Module)
10A	B/ALARM HORN		Burglar Alarm Horn Relay

Relay

Symbol	Relay Name	Type
2 (IG1)	PTC Heater #2 Relay	MINI
3 (IG2)	PTC Heater #1 Relay	MICRO
1 (ACC)	Button Start #2 (IG1) Relay	MICRO
BATTERY C/FAN	Battery C/FAN Relay	MICRO
	Rear Wiper Relay	MICRO
3 (IG2)	Button Start #3 (IG2) Relay	MICRO
1 (ACC)	Button Start #1 (ACC) Relay	MICRO
	Cooling Fan Relay	MICRO
	Rear Defogger Relay	MICRO
	Blower Relay	MICRO
	HEAD LAMP HI Relay	MICRO
POWER OUTLET	Power Outlet Relay	MICRO

LIGHT BULBS

Bulb replacement precaution

Please prepare bulbs with appropriate standards in case of emergencies. Refer to “Bulb Wattage” in chapter 9.

When changing bulbs and sorts, first turn off the engine at a safe place, firmly apply the side brake and take out the battery's negative (-) terminal.

⚠ WARNING - Working on the lights

Prior to working on the light, firmly apply the parking brake, ensure that the ignition switch is turned to the LOCK position and turn off the lights to avoid sudden movement of the vehicle and burning your fingers or receiving an electric shock.

Use only the bulbs of the specified wattage.

⚠ WARNING

Be sure to replace the burned-out bulb with one of the same wattage rating. Otherwise, it may cause extensive wiring damage and possible fire.

⚠ CAUTION

If you don't have necessary tools, the correct bulbs and the expertise, consult a professional workshop. Kia recommends to consult an authorized Kia dealer/service partner. In many cases, it is difficult to replace vehicle light bulbs because other parts of the vehicle must be removed before you can get to the bulb. This is especially true if you have to remove the headlight assembly to get to the bulb(s). Removing/ installing the headlight assembly can result in damage to the vehicle.

⚠ CAUTION

- ***If unauthentic parts or substandard lights are used when changing lights, it may lead to fuse disconnection and malfunction, and other wiring damages.***
- ***Do not install extra lamps or LED to the vehicle. If supplementary lights are installed, it may lead to lamp malfunction and flickering of the lights. In addition, the fuse box and other writing may be damaged.***

- **Lamp part malfunction due to net-work failure**

The headlamp, taillight, and fog light may lit up when the head lamp switch is turned ON, and not light up when the taillight or for light switch is turned ON. This may be cause by network failure or vehicle electrical control system malfunction. If there is a problem, have the system serviced by a professional workshop. Kia recommends to visit an authorized Kia dealer/service partner.

- **Lamp part malfunction due to electrical control system stabilization**

A normally functioning lamp may flicker momentarily. This momentary occurrence is due to stabilization unction of the vehicle's electrical on control system. If the lamp soon returns to normal, the vehicle does not require service.

However, if the lamp goes out after he momentary flickering, or the flickering continues, have the system serviced by a professional workshop. Kia recommends to visit an authorized Kia dealer/service partner.

✻ NOTICE

- **If the light bulb or lamp connector is removed from an operating lamp activated by electricity, the fuse box's electronic device may scan it as a malfunction. Therefore, a lamp malfunction history may be recorded in Diagnostic Trouble Code (DTC) in the fuse box.**
- **It is normal for an operating lamp may blink temporarily. Since this occurrence is due stabilization function of the vehicle's electronic control device, if the lamp lights up normally after temporary blinking, there is no problem in the vehicle. However, if the lamp continues to blink several times or turn off completely, there may be an error in the vehicle's electronic control device. In this case, have the vehicle checked by a professional workshop immediately. Kia recommends to visit an authorized Kia dealer/service partner.**

✻ NOTICE

After an accident or after the headlight assembly is reinstalled, have the headlight aiming adjusted by a professional workshop. Kia recommends to visit an authorized Kia dealer/service partner.

✻ NOTICE

After driving in heavy rain or washing, headlamp and taillamp lenses could appear frosty. This condition is caused by the temperature difference between the lamp inside and outside. This is similar to the condensation on your windows inside your vehicle during the rain and doesn't indicate a problem with your vehicle. If the water leaks into the lamp bulb circuitry, have the vehicle checked by a professional workshop. Kia recommends to visit an authorized Kia dealer/service partner.

Light bulb position (Front)

■ Head lamp

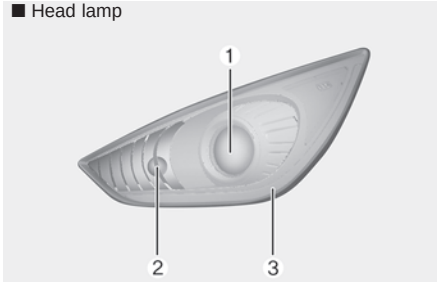

ODE076029

■ Fog lamp

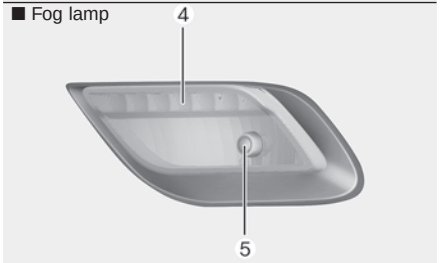

ODE076030

(1) Headlamp (Low/High)
(2) Front turn signal lamp
(3) Position lamp
(4) Day time running lamp
(5) Front fog lamp

Light bulb position (Rear)

■ Rear combination lamp
- Type A

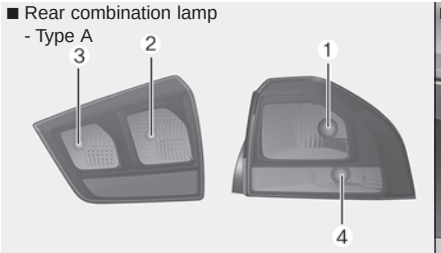

ODE076031L

■ Rear combination lamp
- Type B

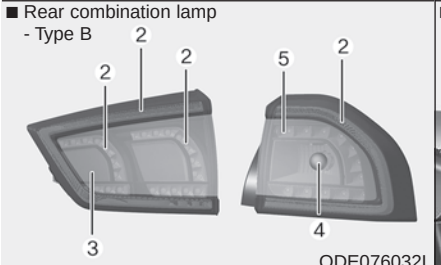

ODE076032L

■ Back up lamp

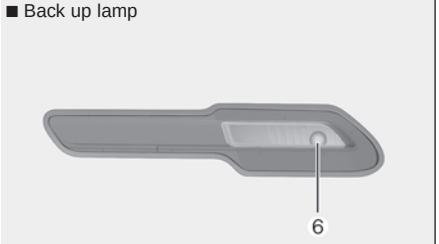

ODE076033L

■ License plate lamp

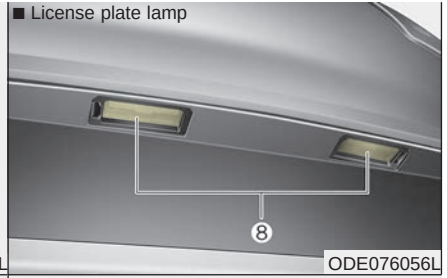

ODE076056L

■ High mounted stop lamp

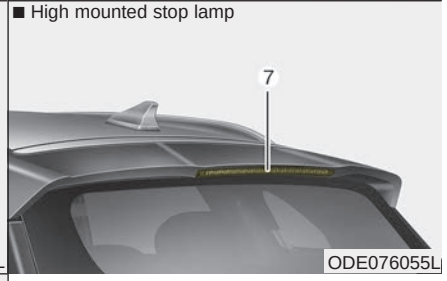

ODE076055L

(1) Stop/tail lamp(Bulb type)
(2) Tail lamp(Bulb type)
(3) Rear fog lamp(LED type)
(4) Rear turn signal lamp
(5) Stop/tail lamp(LED type)
(6) Back up lamp
(7) High mounted stop lamp
(8) License plate lamp

Light bulb position (Side)

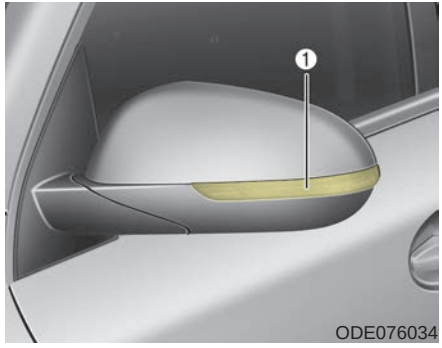

(1) Side repeater lamp (LED type)

Headlamp (HID type) bulb replacement

If the light bulb does not operate, have your vehicle checked by a professional workshop. Kia recommends to visit an authorized Kia dealer/service partner.

⚠ WARNING
- HID Headlamp (if equipped)

Do not attempt to replace or inspect the HID headlamp (XENON bulb) due to electric shock danger. If the light bulb does not operate, have your vehicle checked by a professional workshop. Kia recommends to visit an authorized Kia dealer/service partner.

✻ NOTICE

HID lamps have superior performance vs. halogen bulbs. HID lamps are estimated by the manufacturer to last twice as long or longer than halogen bulbs depending on their frequency of use. They will probably require replacement at some point in the life of the vehicle. Cycling the headlamps on and off more than typical use will shorten HID lamps life. HID lamps do not fail in the same manner as halogen incandescent lamps. If a headlamp goes out after a period of operation but will immediately relight when the headlamp switch is cycled it is likely the HID lamp needs to be replaced. HID lamping components are more complex than conventional halogen bulbs thus have higher replacement cost.

Headlamp (High/Low beam) bulb replacement

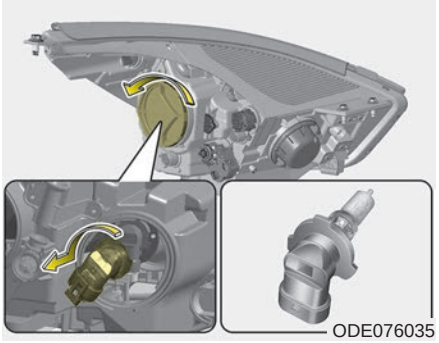

1. Open the hood.
2. Remove the headlamp bulb cover by turning it counterclockwise.
3. Disconnect the headlamp bulb socket-connector.
4. Remove the bulb-socket from the headlamp assembly by turning the bulb-socket counterclockwise until the tabs on the bulb-socket align with the slots on the headlamp assembly.
5. Install a new bulb-socket assembly in the headlamp assembly by aligning the tabs on the bulb-socket with the slots in the headlamp assembly. Push the bulb-socket into the headlamp assembly and turn the bulb-socket clockwise.
6. Install the headlamp bulb cover by turning it clockwise.

Headlamp bulb

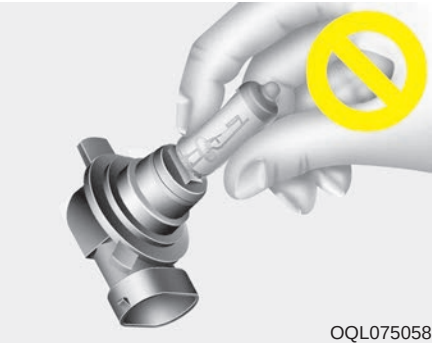

⚠ WARNING - Halogen bulbs

- **Halogen bulbs contain pressurized gas that will produce flying pieces of glass if broken.**
- **Always handle them carefully, and avoid scratches and abrasions. If the bulbs are lit, avoid contact with liquids. Never touch the glass with bare hands. Residual oil may cause the bulb to overheat and burst when lit.**

(Continued)

(Continued)

A bulb should be operated only when installed in a headlight.

- **If a bulb becomes damaged or cracked, replace it immediately and carefully dispose of it.**
- **Wear eye protection when changing a bulb. Allow the bulb to cool down before handling it.**

Front turn signal lamp bulb replacement

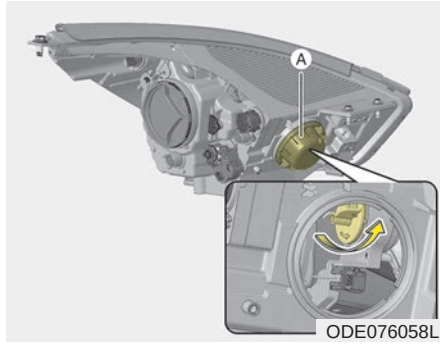

1. Open the hood.
2. Remove the dust cover (A) from the headlamp assembly then bulb-socket by turning the counter-clockwise until the tabs on the bulb-socket align with the slots on the headlamp assembly.
3. Remove the bulb from the bulb-socket by pressing it in and rotating it counterclockwise until the tabs on the bulb align with the slots in the bulb-socket. Pull the bulb out of the bulb-socket
4. Insert a new bulb by inserting it into the bulb-socket and rotating it until it locks into place.
5. Install the socket in the headlamp assembly by aligning the tabs on the bulb-socket with the slots in the assembly. Push the bulb-socket into the headlamp assembly and turn the socket clockwise.

Fog lamp/DRL bulb replacement

ODE076036

If the front fog lamp (Bulb) and DRL bulb (LED) does not operate, have your vehicle checked by a professional workshop. Kia recommends to visit an authorized Kia dealer/service partner.

Stop and tail lamp bulb replacement

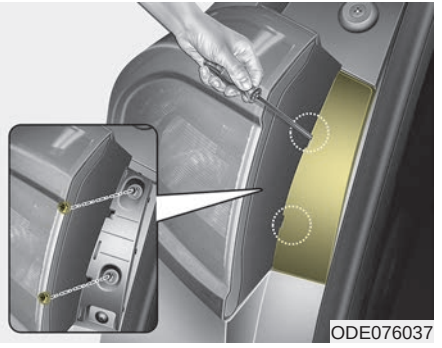
ODE076037

1. Open the tailgate.
2. Open the service cover.
3. Loosen the light assembly retaining screws with a cross-tip screwdriver.

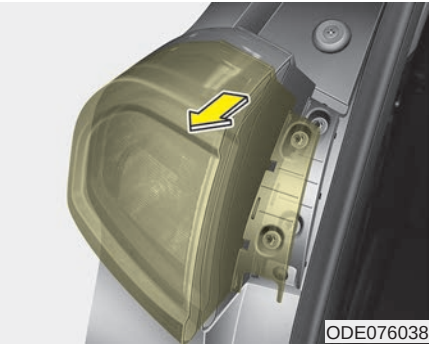
ODE076038

4. Remove the rear combination lamp assembly from the body of the vehicle.
5. Disconnect the rear combination lamp connector.

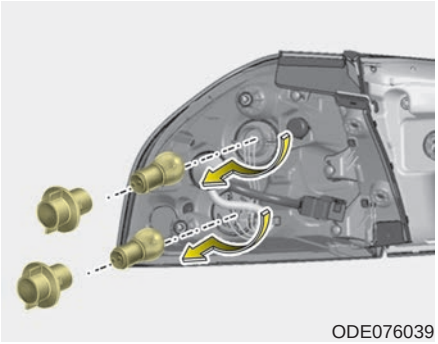
ODE076039

6. Remove the socket from the assembly by turning the socket counterclockwise until the tabs on the socket align with the slots on the assembly.
7. Remove the bulb from the socket by pressing it in and rotating it counterclockwise until the tabs on the bulb align with the slots in the socket. Pull the bulb out of the socket.
8. Insert a new bulb by inserting it into the socket and rotating it until it locks into place.
9. Install the socket in the assembly by aligning the tabs on the socket with the slots in the assembly. Push the socket into the assembly and turn the socket clockwise.
10. Install the rear combination lamp assembly to the body of the vehicle.
11. Install the service cover.

Tail lamp (inside) bulb replacement

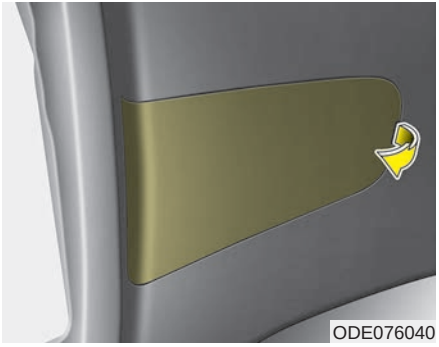
ODE076040

1. Open the tailgate.
2. Remove the service cover.

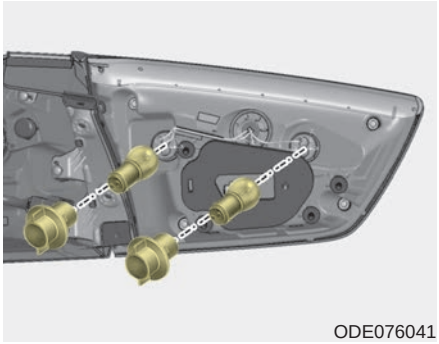

ODE076041

3. Remove the socket from the assembly by turning the socket counterclockwise until the tabs on the socket align with the slots on the assembly.
4. Remove the bulb from the socket by pressing it in and rotating it counter-clockwise until the tabs on the bulb align with the slots in the socket. Pull the bulb out of the socket.
5. Insert a new bulb by inserting it into the socket and rotating it until it locks into place.
6. Install the socket in the assembly by aligning the tabs on the socket with the slots in the assembly. Push the socket into the assembly and turn the socket clockwise.
7. Install the service cover by putting it into the service hole.

Stop and tail lamp (LED type) bulb replacement

ODE076042

If the stop and tail lamp (LED) does not operate, have your vehicle checked by a professional workshop. Kia recommends to visit an authorized Kia dealer/service partner.

Back-up lamp bulb replacement

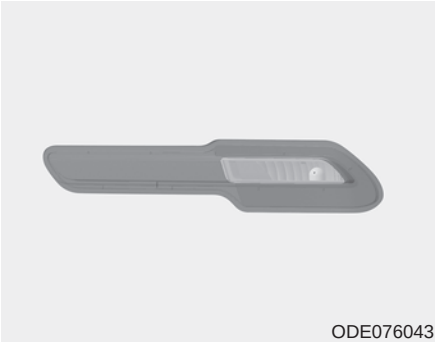

If the Back-up lamp does not operate, have your vehicle checked by a professional workshop. Kia recommends to visit an authorized Kia dealer/service partner.

High mounted stop lamp bulb replacement

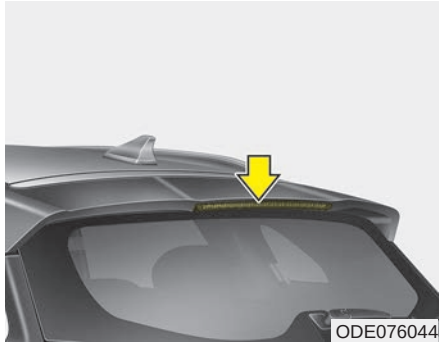

If the high mounted stop lamp (LED) does not operate, have your vehicle checked by a professional workshop. Kia recommends to visit an authorized Kia dealer/service partner.

License plate lamp bulb replacement

1. Using a flat-blade screwdriver, gently pry the lens cover from lamp housing.

2. Remove the socket from the assembly by turning the socket counterclockwise until the tabs on the socket align with the slots on the assembly.
3. Remove the bulb from bulb-socket by pulling it out.
4. Insert a new bulb by inserting it into the bulb-socket.
5. Install the socket in the assembly by aligning the tabs on the socket with the slots in the assembly. Push the socket into the assembly and turn the socket clockwise.
6. Align the lens cover tabs with the lamp housing notches and snap the lens into place.

Side repeater lamp (LED type) bulb replacement

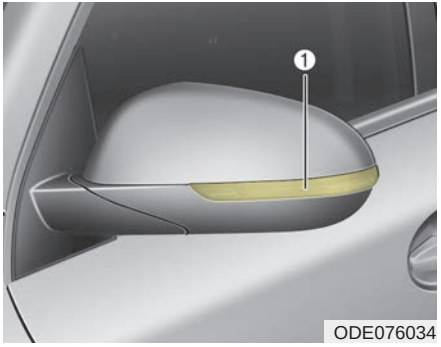

ODE076034

If the side repeater lamp (LED type) does not operate, have your vehicle checked by a professional workshop. Kia recommends to visit an authorized Kia dealer/service partner.

Map lamp bulb replacement

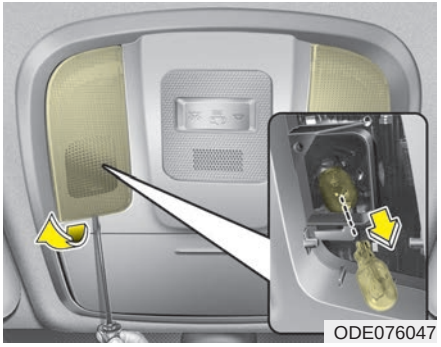
ODE076047

If the map lamp (bulb and LED type) does not operate, have your vehicle checked by a professional workshop. Kia recommends to visit an authorized Kia dealer/service partner.

Vanity mirror lamp bulb replacement

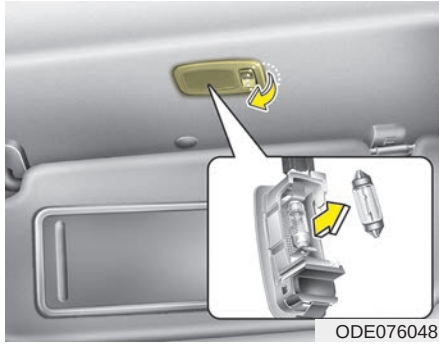
ODE076048

⚠ WARNING

Prior to working on the Interior lamps, ensure that the "OFF" button is depressed to avoid burning your fingers or receiving an electric shock.

1. Using a flat-blade screwdriver, gently pry the lamp assembly from interior.
2. Remove the bulb by pulling it straight out.
3. Install a new bulb in the socket.
4. Install the lamp assembly to interior.

⚠ CAUTION

Be careful not to dirty or damage the lens, lens tab, and plastic housings.

Room lamp bulb replacement

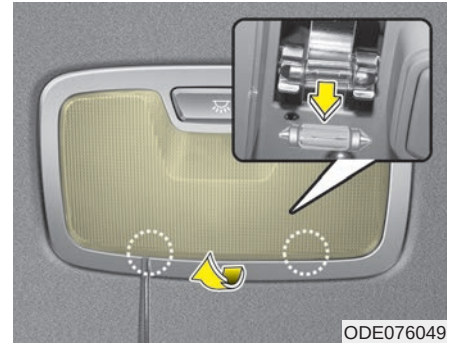
ODE076049

⚠ WARNING

Prior to working on the Interior lamps, ensure that the "OFF" button is depressed to avoid burning your fingers or receiving an electric shock.

1. Using a flat-blade screwdriver, gently pry the lens cover from lamp housing.
2. Remove the bulb by pulling it straight out.
3. Install a new bulb in the socket.
4. Align the lens cover tabs with the lamp housing notches and snap the lens into place.

⚠ CAUTION

Be careful not to dirty or damage the lens, lens tab, and plastic housings.

Tailgate room lamp bulb replacement

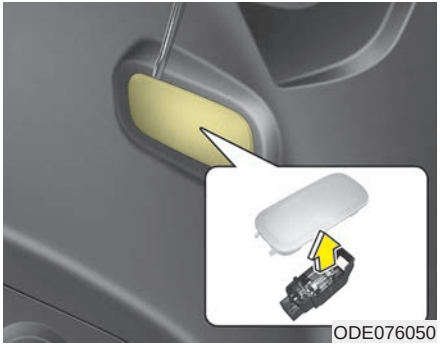

1. Using a flat-blade screwdriver, gently pry the lens cover from lamp housing.
2. Remove the bulb by pulling it straight out.
3. Install a new bulb in the socket.
4. Align the lens cover tabs with the lamp housing notches and snap the lens into place.

⚠ CAUTION

Be careful not to dirty or damage the lens, lens tab, and plastic housings.

✻ NOTICE

If the LED lamp does not operate, have your vehicle checked by a professional workshop. Kia recommends to visit an authorized Kia dealer/service partner.

Headlamp and front fog lamp aiming (for Europe)

Headlamp aiming

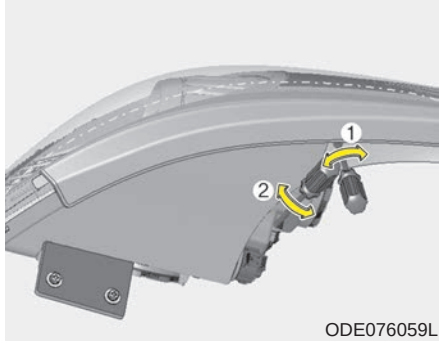

ODE076059L

1. Inflate the tires to the specified pressure and remove any loads from the vehicle except the driver, spare tire, and tools.
2. The vehicle should be placed on a flat floor.
3. Draw vertical lines (Vertical lines passing through respective head lamp centers) and a horizontal line (Horizontal line passing through center of head lamps) on the screen.
4. With the head lamp and battery in normal condition, aim the head lamps so the brightest portion falls on the horizontal and vertical lines.
5. To aim the low and high beams left or right, turn the driver (1) clockwise or counterclockwise. To aim the low and high beams up or down, turn the driver (2) clockwise or counterclockwise.

Front fog lamp aiming

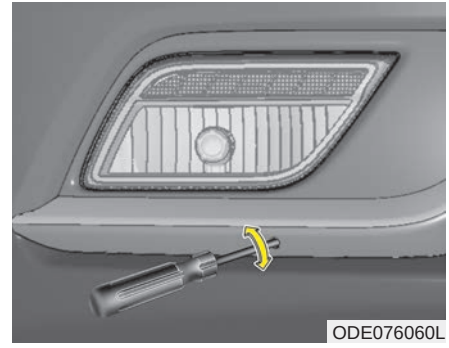
ODE076060L

The front fog lamp can be aimed as the same manner of the head lamps aiming.

With the front fog lamps and battery normal condition, aim the front fog lamps.

To aim the front fog lamp up or down, turn the driver clockwise or counterclockwise.

Aiming point

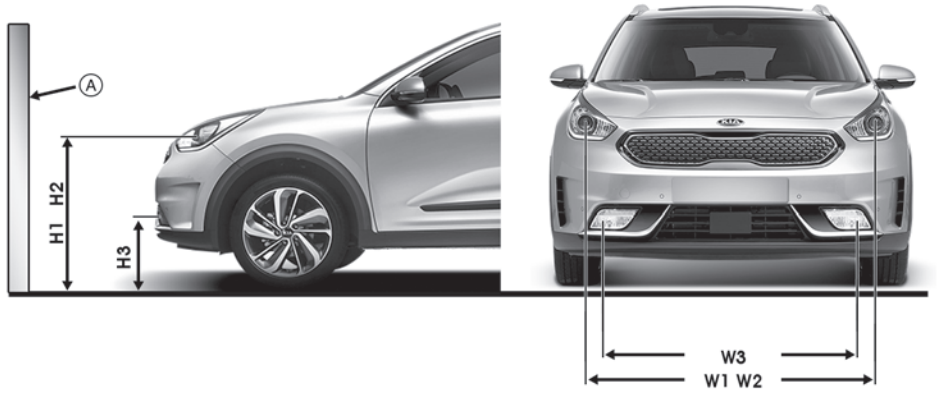

ODE076064L

* A : Screen

Unit: mm (in)

Vehicle condition	Head lamp			
	Ground Height		Distance between lamps	
	Low beam	High beam	Low beam	High beam
	H1	H2	W1	W2
Without driver	820 (32.2)	820 (32.2)	1,404 (55.3)	1,404 (55.3)
With driver	815 (32.1)	815 (32.1)	1,404 (55.3)	1,404 (55.3)

Vehicle condition	Front Fog lamp (Bulb type)	
	Ground Height	Distance between lamps
	H3	W3
Without driver	350 (13.8)	1,148 (45.2)
With driver	345 (13.6)	1,148 (45.2)

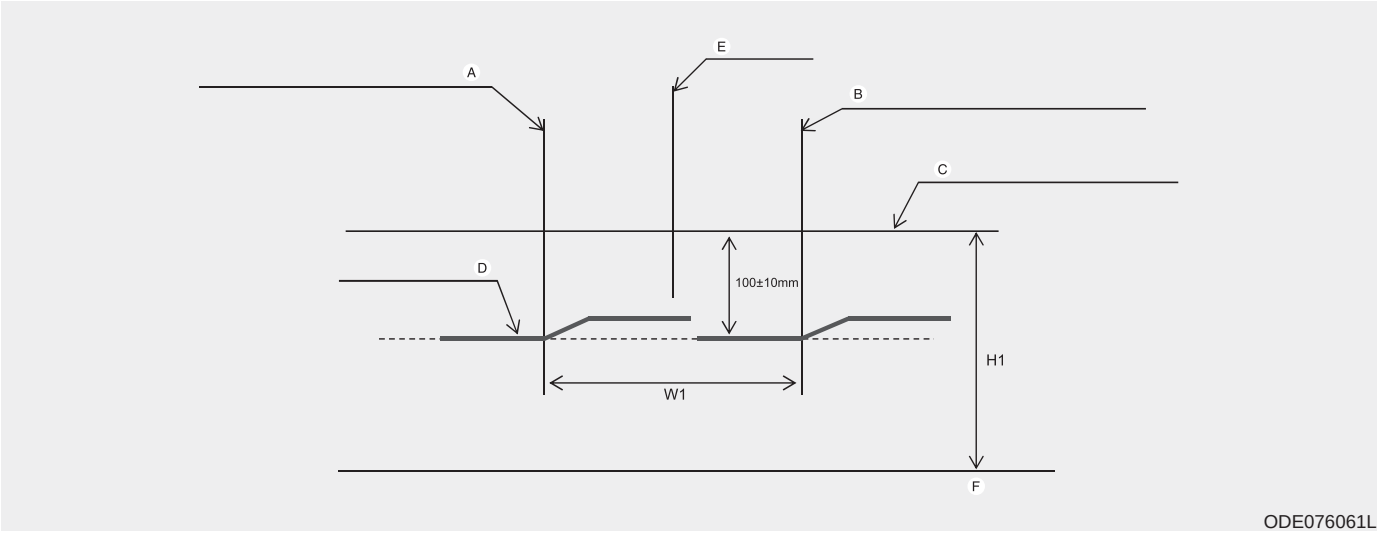

A : Vertical line of the left head lamp (low) bulb center
B : Vertical line of the right head lamp (low) bulb center
C : Horizontal line of head lamp (low) bulb center
D : Cut – Off line
E : Car Axis
F : Ground

Head lamp low beam (LHD)

1. Turn the low beam on without driver aboard.
2. The cut-off line should be projected in the cut-off line shown in the picture.
3. When aiming the low beam, vertical aiming should be adjusted after adjusting the horizontal aiming.
4. If head lamp leveling device is equipped, adjust the head lamp leveling device switch with 0 positions.

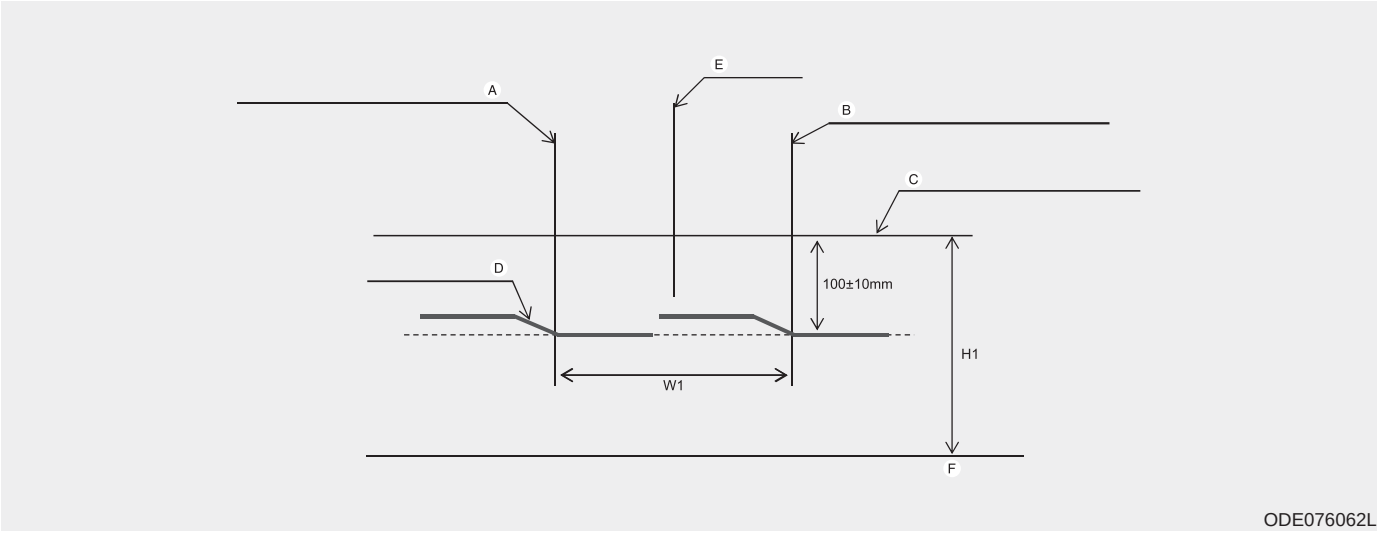

A : Vertical line of the left head lamp (low) bulb center
B : Vertical line of the right head lamp (low) bulb center
C : Horizontal line of head lamp (low) bulb center
D : Cut – Off line
E : Car Axis
F : Ground

Head lamp low beam (RHD)

1. Turn the low beam on without driver aboard.
2. The cut-off line should be projected in the cut-off line shown in the picture.
3. When aiming the low beam, vertical aiming should be adjusted after adjusting the horizontal aiming.
4. If head lamp leveling device is equipped, adjust the head lamp leveling device switch with 0 positions.

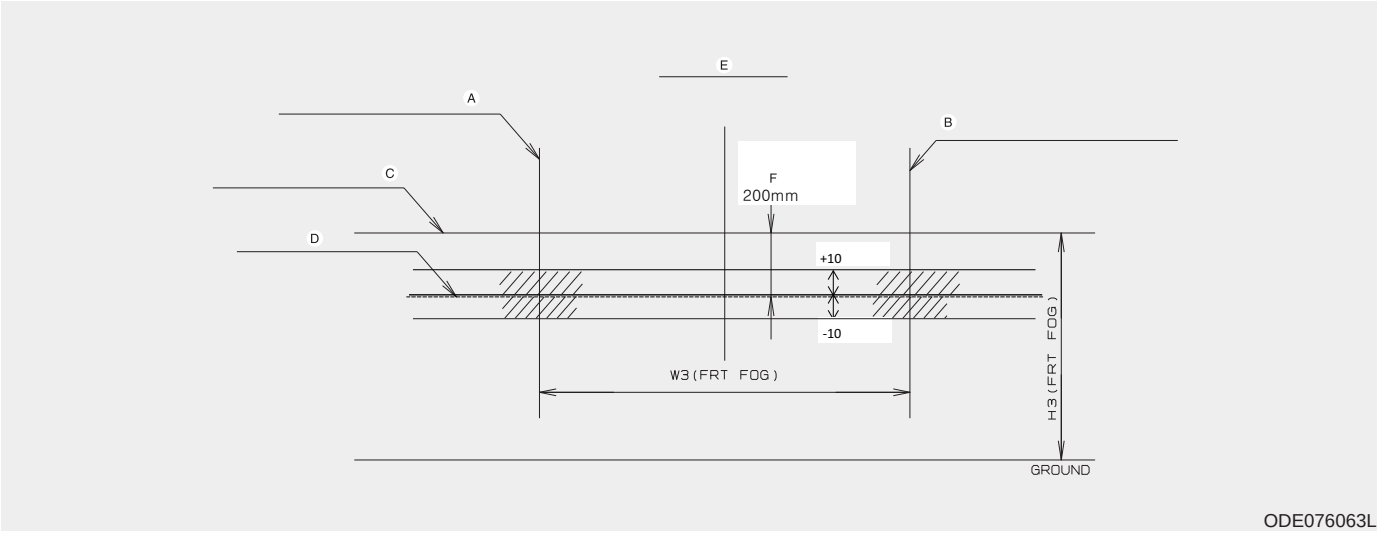

A : Vertical line of the left fog lamp bulb center
B : Vertical line of the right fog lamp bulb center
C : Horizontal line of fog lamp (low) bulb center
D : Cut – Off line
E : Car Axis
F : Upper limit
G : Ground

Front fog light

1. Turn the front fog lamp on without the driver aboard.
2. The cut-off line should be projected in the allowable range (shaded region).

APPEARANCE CARE

Exterior care

Exterior general caution

It is very important to follow the label directions when using any chemical cleaner or polish. Read all warning and caution statements that appear on the label.

Finish maintenance

Washing

To help protect your vehicle's finish from rust and deterioration, wash it thoroughly and frequently at least once a month with lukewarm or cold water.

If you use your vehicle for off-road driving, you should wash it after each off-road trip. Pay special attention to the removal of any accumulation of salt, dirt, mud, and other foreign materials. Make sure the drain holes in the lower edges of the doors and rocker panels are kept clear and clean.

Insects, tar, tree sap, bird droppings, industrial pollution and similar deposits can damage your vehicle's finish if not removed immediately.

Even prompt washing with plain water may not completely remove all these deposits. A mild soap, safe for use on painted surfaces, may be used.

After washing, rinse the vehicle thoroughly with lukewarm or cold water. Do not allow soap to dry on the finish.

⚠ CAUTION

- ***Do not use strong soap, chemical detergents or hot water, and do not wash the vehicle in direct sunlight or when the body of the vehicle is warm.***
- ***Be careful when washing the side windows of your vehicle.***

  Especially, with high-pressure water, water may leak through the windows and wet the interior.
- ***To prevent damage to the plastic parts and lamps, do not clean with chemical solvents or strong detergents.***

⚠ WARNING - Wet brakes

After washing the vehicle, test the brakes while driving slowly to see if they have been affected by water. If braking performance is impaired, dry the brakes by applying them lightly while maintaining a slow forward speed.

High-pressure washing

- When using high-pressure washers, make sure to maintain sufficient distance from the vehicle.

  Insufficient clearance or excessive pressure can lead to component damage or water penetration.
- Do not spray the camera, sensors or its surrounding area directly with a high pressure washer. Shock applied from high pressure water may cause the device to not operate normally.
- Do not bring the nozzle tip close to boots (rubber or plastic covers) or connectors as they may be damaged if they come into contact with high pressure water.

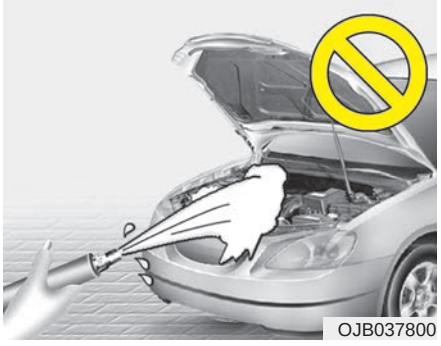
OJB037800

⚠ CAUTION

- ***Water washing in the engine compartment including high pressure water washing may cause the failure of electrical circuits located in the engine compartment.***
- ***Never allow water or other liquids to come in contact with electrical/electronic components inside the vehicle as this may damage them.***

Waxing

Wax the vehicle when water will no longer bead on the paint.
Always wash and dry the vehicle before waxing. Use a good quality liquid or paste wax, and follow the manufacturer's instructions. Wax all metal trim to protect it and to maintain its luster.
Removing oil, tar, and similar materials with a spot remover will usually strip the wax from the finish. Be sure to re-wax these areas even if the rest of the vehicle does not yet need waxing.
Do not apply wax on embossed unpainted unit, as it may tarnish the unit.

⚠ CAUTION

- ***Wiping dust or dirt off the body with a dry cloth will scratch the finish.***
- ***Do not use steel wool, abrasive cleaners, acid detergents or strong detergents containing high alkaline or caustic agents on chrome-plated or anodized aluminum parts. This may result in damage to the protective coating and cause discoloration or paint deterioration.***

Finish damage repair

Deep scratches or stone chips in the painted surface must be repaired promptly. Exposed metal will quickly rust and may develop into a major repair expense.

✻ NOTICE

If your vehicle is damaged and requires any metal repair or replacement, be sure the body shop applies anti-corrosion materials to the parts repaired or replaced.

Bright-metal maintenance

- To remove road tar and insects, use a tar remover, not a scraper or other sharp object.
- To protect the surfaces of bright-metal parts from corrosion, apply a coating of wax or chrome preservative and rub to a high luster.
- During winter weather or in coastal areas, cover the bright metal parts with a heavier coating of wax or preservative. If necessary, coat the parts with non-corrosive petroleum jelly or other protective compound.

Underbody maintenance

Corrosive materials used for ice and snow removal and dust control may collect on the underbody. If these materials are not removed, accelerated rusting can occur on underbody parts such as the fuel lines, frame, floor pan and exhaust system, even though they have been treated with rust protection.

Thoroughly flush the vehicle underbody and wheel openings with lukewarm or cold water once a month, after off-road driving and at the end of each winter. Pay special attention to these areas because it is difficult to see all the mud and dirt. It will do more harm than good to wet down the road grime without removing it. The lower edges of the doors, rocker panels, and frame members have drain holes that should not clog with dirt; trapped water in these areas can cause rusting.

⚠ WARNING

After washing the vehicle, test the brakes while driving slowly to see if they have been affected by water. If braking performance is impaired, dry the brakes by applying them lightly while maintaining a slow forward speed.

Aluminum wheel maintenance

The aluminum wheels are coated with a clear protective finish.

- Do not use any abrasive cleaner, polishing compound, solvent, or wire brushes on aluminum wheels. They may scratch or damage the finish.
- Clean the wheel when it has cooled.
- Use only a mild soap or neutral detergent, and rinse thoroughly with water. Also, be sure to clean the wheels after driving on salted roads. This helps prevent corrosion.
- Avoid washing the wheels with high-speed car wash brushes.
- Do not use any alkaline or acid detergent. It may damage and corrode the aluminum wheels coated with a clear protective finish.

Corrosion protection

Protecting your vehicle from corrosion

By using the most advanced design and construction practices to combat corrosion, we produce vehicles of the highest quality. However, this is only part of the job. To achieve the long-term corrosion resistance your vehicle can deliver, the owner's cooperation and assistance is also required.

Common causes of corrosion

The most common causes of corrosion on your vehicle are:

- Road salt, dirt and moisture that is allowed to accumulate underneath the vehicle.
- Removal of paint or protective coatings by stones, gravel, abrasion or minor scrapes and dents which leave unprotected metal exposed to corrosion.

High-corrosion areas

If you live in an area where your vehicle is regularly exposed to corrosive materials, corrosion protection is particularly important. Some of the common causes of accelerated corrosion are road salts, dust control chemicals, ocean air and industrial pollution.

Moisture breeds corrosion

Moisture creates the conditions in which corrosion is most likely to occur. For example, corrosion is accelerated by high humidity, particularly when temperatures are just above freezing. In such conditions, the corrosive material is kept in contact with the vehicle's surface by moisture that evaporate slowly.
Mud is particularly corrosive because it dries slowly and holds moisture in contact with the vehicle. Although the mud appears to be dry, it can still retain moisture and promote corrosion.
High temperatures can also accelerate corrosion of parts that are not properly ventilated so the moisture can be dispersed.

For all these reasons, it is particularly important to keep your vehicle clean and free of mud or accumulations of other materials. This applies not only to the visible surfaces but particularly to the underside of the vehicle.

To help prevent corrosion

You can help prevent corrosion from getting started by observing the following:

Keep your vehicle clean

The best way to prevent corrosion is to keep your vehicle clean and free of corrosive materials. Attention to the underside of the vehicle is particularly important.

- If you live in a high-corrosion area — where road salts are used, near the ocean, areas with industrial pollution, acid rain, etc.—, you should take extra care to prevent corrosion. In winter, hose off the underside of your vehicle at least once a month and be sure to clean the underside thoroughly when winter is over.
- When cleaning underneath the vehicle, give particular attention to the components under the fenders and other areas that are hidden from view. Do a thorough job; just dampening the accumulated mud rather than washing it away will accelerate corrosion rather than prevent it. Water under high pressure and steam are particularly effective in removing accumulated mud and corrosive materials.
- When cleaning lower door panels, rocker panels and frame members, be sure that drain holes are kept open so that moisture can escape and not be trapped inside to accelerate corrosion.

Keep your garage dry

Don't park your vehicle in a damp, poorly ventilated garage. This creates a favorable environment for corrosion. This is particularly true if you wash your vehicle in the garage or drive it into the garage when it is still wet or covered with snow, ice or mud. Even a heated garage can contribute to corrosion unless it is well ventilated so moisture is dispersed.

Keep paint and trim in good condition

Scratches or chips in the finish should be covered with "touch-up" paint as soon as possible to reduce the possibility of corrosion. If bare metal is showing through, the attention of a qualified body and paint shop is recommended.

Bird droppings : Bird droppings are highly corrosive and may damage painted surfaces in just a few hours. Always remove bird droppings as soon as possible.

Don't neglect the interior

Moisture can collect under the floor mats and carpeting and cause corrosion. Check under the mats periodically to be sure the carpeting is dry. Use particular care if you carry fertilizers, cleaning materials or chemicals in the vehicle.

These should be carried only in proper containers and any spills or leaks should be cleaned up, flushed with clean water and thoroughly dried.

Interior care

Interior general precautions

Prevent chemicals such as perfume, cosmetic oil, sun cream, hand cleaner, and air freshener from contacting the interior parts because they may cause damage or discoloration. If they do contact the interior parts, wipe them off immediately. If necessary, use a vinyle cleaner, see instructions for correct usage.

⚠ CAUTION

Never allow water or other liquids to come in contact with electrical/electronic components inside the vehicle as this may damage them.

⚠ CAUTION

When cleaning leather products (steering wheel, seats etc.), use neutral detergents or low alcohol content solutions. If you use high alcohol content solutions or acid/alkaline detergents, the color of the leather may fade or the surface may get stripped off.

Taking care of leather seats

- Vacuum the seat periodically to remove dust and sand on the seat. It will prevent abrasion or damage of the leather and maintain its quality.
- Wipe the natural leather seat cover often with dry or soft cloth.
- Sufficient use of a leather protective may prevent abrasion of the cover and helps maintain the color.

  Be sure to read the instructions and consult a specialist when using leather coating or protective agents.
- Leather with bright colors(beige, cream beige) is easily contaminated and clear in appearance. Clean the seats frequently.
- Avoid wiping with wet cloth. It may cause the surface to crack.

Cleaning the leather seats

- Remove all contaminations instantly. Refer to instructions below for removal of each contaminant.
- Cosmetic products(sunscreen, foundation, etc.)
  - Apply cleansing cream on a cloth and wipe the contaminated point. Wipe off the cream with a wet cloth and remove water with a dry cloth.
- Beverages(coffee, soft drink, etc.)
  - Apply a small amount of neutral detergent and wipe until contaminations do not smear.
- Oil
  - Remove oil instantly with absorbable cloth and wipe with stain remover for natural leather only.
- Chewing gum
  - Harden the gum with ice and remove gradually.

Fabric seat cover using precautions (If equipped)

Please clean the fabric seats regularly with a vacuum cleaner in consideration of fabric material characteristics. If they are heavily soiled with beverage stains, etc., use a suitable interior cleaner. To prevent damage to seat covers, wipe off the seat covers down to the seams with a large wiping motion and moderate pressure using a soft sponge or microfiber cloth.

Velcro closures on clothing or sharp objects may cause snagging or scratches on the surface of the seats. Make sure not to rub such objects against the surface.

Cleaning the upholstery and interior trim

Vinyl

Remove dust and loose dirt from vinyl with a whisk broom or vacuum cleaner. Clean vinyl surfaces with a vinyl cleaner.

Fabric

Remove dust and loose dirt from fabric with a whisk broom or vacuum cleaner. Clean with a mild soap solution recommended for upholstery or carpets. Remove fresh spots immediately with a fabric spot cleaner. If fresh spots do not receive immediate attention, the fabric can be stained and its color can be affected. Also, its fire-resistant properties can be reduced if the material is not properly maintained.

⚠ CAUTION

Using anything but recommended cleaners and procedures may affect the fabric's appearance and fire-resistant properties.

Cleaning the lap/shoulder belt webbing

Clean the belt webbing with any mild soap solution recommended for cleaning upholstery or carpet. Follow the instructions provided with the soap. Do not bleach or re-dye the webbing because this may weaken it.

Cleaning the interior window glass

If the interior glass surfaces of the vehicle become fogged (that is, covered with an oily, greasy or waxy film), they should be cleaned with a glass cleaner. Follow the directions on the glass cleaner container.

⚠ CAUTION

Do not scrape or scratch the inside of the rear window. This may result in damage of the rear window defroster grid.

EMISSION CONTROL SYSTEM (IF EQUIPPED)

The emission control system of your vehicle is covered by a written limited warranty. Please see the warranty information contained in the Warranty & Maintenance book in your vehicle.

Your vehicle is equipped with an emission control system to meet all applicable emission regulations.

There are three emission control systems, as follows.

(1) Crankcase emission control system
(2) Evaporative emission control system
(3) Exhaust emission control system

In order to assure the proper function of the emission control systems, have your vehicle inspected and maintained by a professional workshop in accordance with the maintenance schedule in this manual. Kia recommends to visit an authorized Kia dealer/service partner.

Caution for the Inspection and Maintenance Test (With Electronic Stability Control (ESC) system)

- **To prevent the vehicle from misfiring during dynamometer testing, turn the Electronic Stability Control (ESC) system off by pressing the ESC switch.**
- **After dynamometer testing is completed, turn the ESC system back on by pressing the ESC switch again.**

1. Crankcase emission control system

The positive crankcase ventilation system is employed to prevent air pollution caused by blow-by gases being emitted from the crankcase. This system supplies fresh filtered air to the crankcase through the air intake hose. Inside the crankcase, the fresh air mixes with blow-by gases, which then pass through the PCV valve into the induction system.

2. Evaporative emission control system

The Evaporative Emission Control System is designed to prevent fuel vapors from escaping into the atmosphere.

Canister

Fuel vapors generated inside the fuel tank are absorbed and stored in the onboard canister. When the engine is running, the fuel vapors absorbed in the canister are drawn into the surge tank through the purge control solenoid valve.

Purge Control Solenoid Valve (PCSV)

The purge control solenoid valve is controlled by the Engine Control Module (ECM); when the engine coolant temperature is low during idling, the PCSV closes so that evaporated fuel is not taken into the engine. After the engine warms up during ordinary driving, the PCSV opens to introduce evaporated fuel to the engine.

3. Exhaust emission control system

The Exhaust Emission Control System is a highly effective system which controls exhaust emissions while maintaining good vehicle performance.

Vehicle modifications

This vehicle should not be modified. Modification of your vehicle could affect its performance, safety or durability and may even violate governmental safety and emissions regulations.

In addition, damage or performance problems resulting from any modification may not be covered under warranty.

- If you use unauthorized electronic devices, it may cause the vehicle to operate abnormally, wire damage, battery discharge and fire. For your safety, do not use unauthorized electronic devices.

Engine exhaust gas precautions (carbon monoxide)

- Carbon monoxide can be present with other exhaust fumes. Therefore, if you smell exhaust fumes of any kind inside your vehicle, have it inspected and repaired immediately. If you ever suspect exhaust fumes are coming into your vehicle, drive it only with all the windows fully open. Have your vehicle checked and repaired immediately.

⚠ WARNING - Exhaust

Engine exhaust gases contain carbon monoxide (CO). Though colorless and odorless, it is dangerous and could be lethal if inhaled. Follow the instructions on this page to avoid CO poisoning.

- Do not operate the engine in confined or closed areas (such as garages) any more than what is necessary to move the vehicle in or out of the area.
- When the vehicle is stopped in an open area for more than a short time with the engine running, adjust the ventilation system (as needed) to draw outside air into the vehicle.
- Never sit in a parked or stopped vehicle for any extended time with the engine running.
- When the engine stalls or fails to start, excessive attempts to restart the engine may cause damage to the emission control system.

Operating precautions for catalytic converters (if equipped)

⚠ WARNING - Fire

- **A hot exhaust system can ignite flammable items under your vehicle. Do not park the vehicle over or near flammable objects, such as grass, vegetation, paper, leaves, etc.**
- **The exhaust system and catalytic system are very hot while the engine is running or immediately after the engine is turned off. Keep away from the exhaust system and catalytic, you may get burned.**

  Also, do not remove the heat sink around the exhaust system, do not seal the bottom of the vehicle or do not coat the vehicle for corrosion control. It may present a fire risk under certain conditions.

Your vehicle is equipped with a catalytic converter emission control device.

Therefore, the following precautions must be observed:

- Make sure to refuel your vehicle according to the "Fuel requirements" suggested in chapter 1.
- Do not operate the vehicle when there are signs of engine malfunction, such as misfire or a noticeable loss of performance.
- Do not misuse or abuse the engine. Examples of misuse are coasting with the ignition off and descending steep grades in gear with the ignition off.
- Do not operate the engine at high idle speed for extended periods (5 minutes or more).

- Do not modify or tamper with any part of the engine or emission control system. All inspections and adjustments must be made by a professional workshop. Kia recommends to visit an authorized Kia dealer/service center.
- Avoid driving with an extremely low fuel level. Running out of fuel could cause the engine to misfire, damaging the catalytic converter.

Failure to observe these precautions could result in damage to the catalytic converter and to your vehicle.

Additionally, such actions could void your warranties.

Specifications & Consumer information

Dimensions 9-2
Engine 9-2
Gross vehicle weight 9-3
Luggage volume 9-3
Air conditioning system 9-3
Bulb wattage 9-4
Tires and wheels (For europe) 9-5
Tires and wheels (Except europe) 9-6
Recommended lubricants and capacities 9-7
• Recommended SAE viscosity number 9-8
Vehicle identification number (VIN) 9-9
Vehicle certification label 9-9
Tire specification and pressure label 9-10
Engine number 9-10
Air conditioner compressor label 9-10
Refrigerant label 9-11
Declaration of conformity 9-11

DIMENSIONS

Item			Size (mm)
Overall length			4,355
Overall width			1,805
Overall height	Without Roof rack		1,535
	With Roof rack		1,545
Tread	Front	205/60R16	1,565
		225/45R18	1,555
	Rear	205/60R16	1,579
		225/45R18	1,569
Wheelbase			2,700

ENGINE

Item	Gasoline
	1.6 GDI
Displacement [cc]	1,580
Bore x Stroke [mm]	72 X 97
Firing order	1-3-4-2
No. of cylinders	4 In-line, DOHC

GROSS VEHICLE WEIGHT

Item	Gasoline
	1.6
	DCT
GVW (lbs)	1,930 kg (4,255)

LUGGAGE VOLUME

Item		Volume
VDA	MIN.	427 liter
	MAX.	1,425 liter

Min : Behind rear seat to upper edge of the seat back.
Max : Behind front seat to roof.

AIR CONDITIONING SYSTEM

Item	Weight of volume	Classification
Refrigerant	550 ± 10g	R-1234yf
	550 ± 10g	R-134a
Compressor lubricant	130 ± 10g	POE

We recommend that you contact an authorized Kia dealer for more details.

BULB WATTAGE

Light Bulb			Wattage (W)	Bulb type
Front	Headlamps (Low/High)		60	HB3 HL+
	Headlamps (Low/High) - HID type*		25	D8S
	Front turn signal lamps		21	PY21W
	Front position lamps	LED type	LED	LED
	Daytime running light	Bulb type	21	P21 L/L
		LED type *	LED	LED
	Front fog lamps	Bulb type	35	H8LL
	Side Repeater lamps	Bulb type	5	W5W
		LED type *	LED	LED
Rear	Rear Stop/Tail lamps (outside)	Bulb type	21/5	P21/5W
	Rear tail lamps (Inside)		5	W5W
	Rear fog lamps (Inside)	LED type *	LED	LED
	Rear Stop/Tail lamps (outside)	LED type	LED	LED
	Rear tail lamps (Inside)		LED	LED
	Rear turn signal lamps		21	P21W
	Back-up lamps		16	W16W
	High mounted stop lamp		LED	LED
	License plate lamps		5	W5W
Interior	Map lamps		10	WEDGE
	Room lamps		10	FESTOON
	Vanity mirror lamps		5	FESTOON
	Tailgate lamp		10	FESTOON

* If equipped

TIRES AND WHEELS (FOR EUROPE)

Item	Tire size	Wheel size	Load Capacity		Speed capacity		Inflation pressure [bar(psi, kPa)]				Wheel lug nut torque [Kgf·m (lbf·ft, N·m)]
							Normal load		Maximum load		
			LI *1	Kg	SS *2	Km/h	Front	Rear	Front	Rear	
Full size tire	205/60 R16	6.5J X 16	92	630	H	210	2.5 (36, 250)		2.5 (36, 250)		11~13 (79~94, 107~127)
	225/45 ZR18	7.5J X 18	91	615	W	270	2.5 (36, 250)		2.5 (36, 250)		
Compact Spare tire	T125/80 D16	4T X 16	97	730	M	130	4.2 (60, 420)		4.2 (60, 420)		

*1 : Load Index
*2 : Speed Symbol

✻ NOTICE

- **We recommend that when replacing tires, use the same originally supplied with the vehicles. If not, that affects driving performance.**
- **When driving in high altitude grades, it is natural for the atmospheric pressure to decrease. Therefore, please check the tire pressure and add more air when necessary. Additionally required tire air pressure per km above sea level: 1.5psi/km**

⚠ CAUTION

When replacing tires, use the same size originally supplied with the vehicle. Using tires of a different size can damage the related parts or make it work irregularly.

TIRES AND WHEELS (EXCEPT EUROPE)

Item	Tire size	Wheel size	Load Capacity		Speed capacity		Inflation pressure [bar(psi, kPa)]				Wheel lug nut torque [Kgf·m (lbf·ft, N·m)]
							Normal load		Maximum load		
			LI *1	Kg	SS *2	Km/h	Front	Rear	Front	Rear	
Full size tire	205/60 R16	6.5J X 16	92	630	H	210	2.5 (36, 250)		2.5 (36, 250)		11~13 (79~94, 107~127)
	225/45 R18	7.5J X 18	91	615	V	240	2.5 (36, 250)		2.5 (36, 250)		
Compact Spare tire	T125/80 D16	4T X 16	97	730	M	130	4.2 (60, 420)		4.2 (60, 420)		

*1 : Load Index
*2 : Speed Symbol

✻ NOTICE

- **We recommend that when replacing tires, use the same originally supplied with the vehicles. If not, that affects driving performance.**
- **When driving in high altitude grades, it is natural for the atmospheric pressure to decrease. Therefore, please check the tire pressure and add more air when necessary. Additionally required tire air pressure per km above sea level: 1.5psi/km**

⚠ CAUTION

When replacing tires, use the same size originally supplied with the vehicle. Using tires of a different size can damage the related parts or make it work irregularly.

RECOMMENDED LUBRICANTS AND CAPACITIES

Lubricant	Volume	Classification
Engine oil *1 *2 (drain and refill) Recommends TOTAL QUARTZ	3.8 liter (4.01 US qt.)	5W-30 ACEA A5/B5 *3
Dual Clutch Transaxle Fluid	1.6 ~ 1.7 liter (1.69 ~ 1.79 US qt.)	SAE 70W, API GL-4 (Recommended HK SYN DCTF 70W (SK), SPIRAX S6 GHME 70W DCTF (H.K.SHELL), GS DCTF HD 70W (GS CALTEX))
Coolant	5.98 liter (6.31 US qt.)	Mixture of antifreeze and water (Ethylene glycol base coolant for aluminum radiator)
Inverter coolant	2.43 liter (2.56 US qt.)	Mixture of antifreeze and water (Ethylene glycol base coolant for aluminum radiator)
Brake fluid	402.6 ± 24.4 cc (0.425 ± 0.025 US qt.)	DOT 3 or DOT 4
Engine clutch actuator fluid	100 ± 20 cc (0.105 ± 0.021 US qt.)	DOT 3 or DOT 4
Fuel	45 liter (47.5 US qt.)	Refer to Fuel requirements in chapter 1.

*1 : Refer to the recommended SAE viscosity numbers on the next page.

*2 : Engine oils labeled Energy Conserving Oil are now available. Along with other additional benefits, they contribute to fuel economy by reducing the amount of fuel necessary to overcome engine friction. Often, these improvements are difficult to measure in everyday driving, but in a year's time, they can offer significant cost and energy savings.

*3 : If the ACEA A5 engine is not available in your country, you are able to use ACEA A3/B3, A3/B4.

Recommended SAE viscosity number

⚠ CAUTION

Always be sure to clean the area around any filler plug, drain plug, or dipstick before checking or draining any lubricant. This is especially important in dusty or sandy areas and when the vehicle is used on unpaved roads. Cleaning the plug and dipstick areas will prevent dirt and grit from entering the engine and other mechanisms that could be damaged.

Engine oil viscosity (thickness) has an effect on fuel economy and cold weather operating (engine start and engine oil flowability). Lower viscosity engine oils can provide better fuel economy and cold weather performance, however, higher viscosity engine oils are required for satisfactory lubrication in hot weather. Using oils of any viscosity other than those recommended could result in engine damage. When choosing an oil, consider the range of temperature your vehicle will be operated in before the next oil change. Proceed to select the recommended oil viscosity from the chart.

Temperature Range for SAE Viscosity Numbers

Temperature										
	°C	-30	-20	-10	0	10	20	30	40	50
	(°F)	-10	0	20	40	60	80	100	120	
Engine Oil *1				20W-50						
				15W-40						
				10W-30						
		0/5W-30, 5W-40								

*1 : For better fuel economy, it is recommended to use the engine oil of a viscosity grade SAE 5W-30 (ACEA A5/B5).

However, if the engine oil is not available in your country, select the proper engine oil using the engine oil viscosity chart.

VEHICLE IDENTIFICATION NUMBER (VIN)

■ Frame number

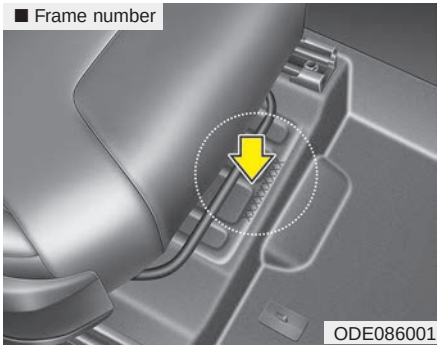

The vehicle identification number (VIN) is the number used in registering your vehicle and in all legal matters pertaining to its ownership, etc.

The number is punched on the floor under the passenger seat. To check the number, open the cover.

■ VIN label (if equipped)

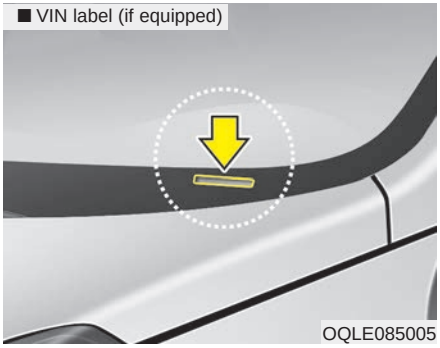

The VIN is also on a plate attached to the top of the dashboard. The number on the plate can easily be seen through the windshield from outside.

VEHICLE CERTIFICATION LABEL

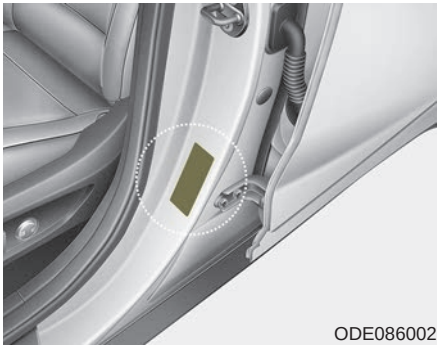

The vehicle certification label attached on the driver's (or front passenger's) side center pillar gives the vehicle identification number (VIN).

TIRE SPECIFICATION AND PRESSURE LABEL

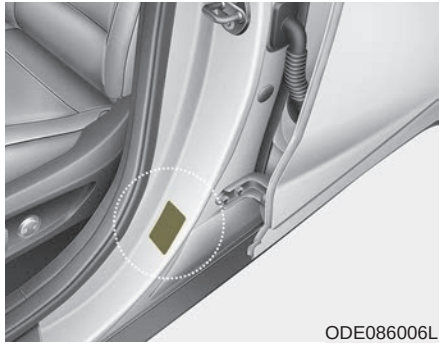

ODE086006L

The tires supplied on your new vehicle are chosen to provide the best performance for normal driving.

The tire label located on the driver's side center pillar gives the tire pressures recommended for your vehicle.

ENGINE NUMBER

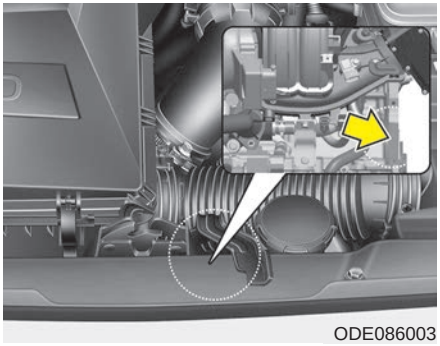

ODE086003

The engine number is stamped on the engine block as shown in the drawing.

AIR CONDITIONER COMPRESSOR LABEL

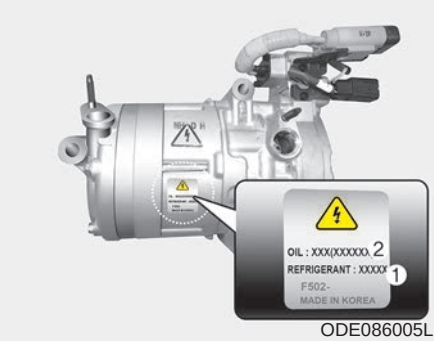

ODE086005L

A compressor label informs you the type of compressor your vehicle is equipped with such as model, supplier part number, production number, refrigerant (1) and refrigerant oil (2).

REFRIGERANT LABEL

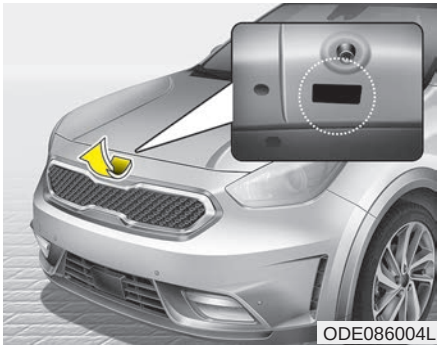

The refrigerant label is located on the underside of the hood.

DECLARATION OF CONFORMITY

■ Example

CE 0678

CE0678

The radio frequency components of the vehicle comply with requirements and other relevant provisions of Directive 1995/5/EC.

Further information including the manufacturer's declaration of conformity is available on Kia web site as follows;

http://www.kia-hotline.com

Appendix

Шофиране през зимата (Bulgarian version) . . . 10-2
Vetrarakstur (Icelandic version) 10-6

ШОФИРАНЕ ПРЕЗ ЗИМАТА (BULGARIAN VERSION)

Тежките зимни атмосферни условия могат да предизвикат по-голямо износване и други проблеми. За да сведете до минимум проблемите, свързани с шофирането през зимата, следвайте препоръките по-долу:

Сняг или поледица

За да карате своето превозно средство при дълбока снежна покривка може да се наложи да използвате зимни гуми или да поставите вериги върху тях. Ако са необ ходими зимни гуми, трябва да изберете гуми със същия размер и вид като тези на оригиналните гуми.

В противен случай това може да се отрази неблагоприятно на безопасността и експлоатацията на Вашия автомобил. Освен това карането с висока скорост, бързото ускорение, внезапното натискане на спирачки и резките завои крият сериозни опасности.

При забавяне на скоростта, използвайте доколкото е възможно спирачките на дви гателя. Внезапното натискане на спирачки на заснежена или заледена настилка може да предизвика занасяне. Трябва да под държате достатъчна дистанция между автомобила, който се движи пред Вас, и Вашия автомобил.

Освен това натискайте спирачката леко. Следва да се отбележи че инсталирането на веригите върху гума та ще позволи прилагането на по-голяма движеща сила, но няма да предотврати занасянето встрани.

✻ БЕЛЕЖКА

Веригите за гуми не са позволени във всички държави. Проверете норма тивната уредба в своята страна преди да поставите вериги за гуми.

Г уми за сняг

Ако поставите гуми за сняг на своя авто- мобил се уверете, че това са радиалнигуми със същия размер и товарен индекс като тези на оригиналните гуми. Поставете гуми за сняг на всичките четири колела, за да балансирате експлоатацията на своя автомобил във всякакви атмос- ферни условия. Имайте предвид, че тягата на гумите за сняг върху суха настилка не може да бъде толкова голяма колкото тази на оригиналните гуми. Следва да карате внимателно, дори когато пътищата са почистени. Консултирайте се с доставчика на гуми за максималната препоръчителна скорост.

⚠ ПРЕДУПРЕЖДЕНИЕ
- Размер на гумите за сняг

Г умите за сняг следва да са равностойни по размер и тип на тези на стандартните гуми на автомобила. В противен случай това може да се отрази неблагоприятно на безопасността и експлоатацията на Вашия автомобил.

Не монтирайте гуми с шипове, преди да сте проверили местните, национални и общински разпоредби за възможни огра- ничения в тяхната употреба.

Вериги за гуми

Тъй като страниците на радиалните гуми са по-тънки, те могат да се повредят, ако върху тях се монтират някои видове вери- ги за сняг. Ето защо се препоръчва изпол- зването на гуми за сняг, а не на вериги за сняг. Не поставяйте вериги върху автомо- били, чиито колела са с алуминиеви джан- ти; веригите за сняг могат да повредят колелата. Ако трябва да се използват вериги за сняг, използвайте телени вериги с дебелина от поне 12 мм.

Повредата на Вашия автомобил вследствие на непра- вилната употреба на вериги за сняг не е в обхвата на гаранцията на производителя на Вашия автомобил.

Вериги за гуми трябва да се инсталират само на предните гуми.

⚠ ВНИМАНИЕ

- ***Уверете се, че размерът и видът на веригите са правилните за Вашите гуми. Неправилните вериги за сняг могат да повредят каросерията и окачването на автомобила и този тип повреда може да не е в обхвата на производствената гаранция за Вашия автомобил. Също така куките за свързване на веригите за сняг могат да се повредят от намиращите се в контакт с тях автомобилни части, като това може да доведе до разхлабването им. Уверете се, че веригите за сняг са от клас S според класификацията на Дружеството на автомобилните инженери (SAE).***

(продължение)

(продължение)

- ***Винаги проверявайте дали вериги- те са били поставени правилно след като изминете около 0,5 до 1 км, за да се уверите в безопасното им поставяне. Затегнете веригите или ги поставете отново, ако са се разхлабили.***
- ***Ако автомобилът ви е с 18 инчови гуми, не използвайте вериги за сняг. Те могат да повредят вашия автомобил (колело, окачване и тялото).***

Монтиране на вериги

Когато инсталирате веригите, следвайте инструкциите на производителя и ги затег- нете максимално. Карайте бавно с инста- лирани вериги. Ако чуете, че веригите са навлезли в контакт с каросерията или шасито, спрете и ги затегнете. Ако те все още са в контакт, намалете скоростта до преустановяване на контакта. Свалете веригите веднага, щом започнете да кара- те по почистените пътища.

⚠ ПРЕДУПРЕЖДЕНИЕ - Поставяне на вериги

Когато поставите вериги за сняг , пар- кирайте автомобила на равно място далеч от пътното движение. Включете аварийните светлини и поставете светлоотразителния три- ъгълник зад автомобила, ако разпо- лагате с такъв. Винаги паркирайте автомобила в паркинг, дръпнете ръч-ната спирачка и изключете двигате- ля преди да поставите веригите за сняг.

⚠ ПРЕДУПРЕЖДЕНИЕ - Вериги за гуми

- **Използването на вериги може да се отрази неблагоприятно на работата на Вашия автомобил.**
- **Не надвишавайте пределната ско- рост, препоръчана от производителя, или скоростта от 30 км/ч, което е по- ниско.**
- **Карайте внимателно и избягвайте неравности, дупки, резки завои и други опасности на пътя, които могат да накарат автомобила да подскача.**
- **Избягвайте резките завои или изпол- зването на спирачки, ако колелата са блокирани.**

⚠ ВНИМАНИЕ

- ***Веригите с грешен размер или тези, които са неправилно инсталирани, могат да повредят спирачните накладки, окачването, каросерията и колелата.***
- ***Спрете и затегнете веригите повтор- но винаги, щом ги чуете да удрят автомобила.***

VETRARAKSTUR (ICELANDIC VERSION)

Akstur í þungri færð og vetrarveðri leiðir til aukins slits á ökutækinu og skapar ýmis vandamál. Hægt er að draga úr erfiðleikum sem fylgja vetrarakstri ef farið er að þessum ráðleggingum:

Akstur í snjó eða hálku

Við akstur í djúpum snjó kann að vera nauðsynlegt að nota vetrarhjólbarða eða setja keðjur á hjólbarðana. Reynist nauðsynlegt að nota vetrarhjólbarða þarf að velja hjólbarða af sömu stærð og gerð og venjulegu hjólbarðarnir. Sé það ekki gert getur það dregið úr öryggi og skert aksturseiginleika ökutækisins.

Hraðakstur, skyndileg hröðun, nauðhemlun og krappar beygjur geta enn fremur falið í sér mikla hættu.

Þegar dregið er úr hraða er ráðlegt að beita vélarhemlun sem kostur er. Við nauðhemlun á snævi þöktum eða hálum vegum getur ökutækið hæglega runnið til. Nauðsynlegt er að halda hæfilegri fjarlægð á milli þíns ökutækis og ökutækisins fyrir framan. Alltaf ætti að beita hemlinum mjúklega. Hafa ber í huga að ef keðjur eru settar á hjólbarða fæst aukinn drifkraftur en það hindrar þó ekki að ökutækið renni til hliðanna.

✻ ATHUGIÐ

Notkun snjókeðja er ólögleg í sumum ríkjum. Kynnið ykkur gildandi landslög áður en keðjur eru settar upp.

Vetrarhjólbarðar

Ef vetrarhjólbarðar eru settir á ökutækið þarf að gæta þess að nota þverofna hjól- barða af sömu stærð og ásþunga og upprunalegu hjólbarðarnir. Setjið vetrarhjólbarða á öll fjögur hjólin til að tryggja örugga stýringu ökutækisins við öll veðurskilyrði. Hafið í huga að á auðum vegi kunna vetrarhjólbarðar að hafa minna grip en hjólbarðarnir sem fylgdu ökutækinu. Því þarf að aka af gætni, jafnvel á auðum vegum. Ráðfærið ykkur við söluaðila hjólbarðanna um ráðlagðan hámarkshraða.

⚠ VIÐVÖRUN
- stærðir vetrarhjólbarða

Vetrarhjólbarðar ættu að vera af sömu stærð og gerð og hjólbarðarnir sem fylgdu ökutækinu.

Misræmi á því getur dregið úr öryggi og skert aksturseiginleika ökutækisins.

Áður en negldir hjólbarðar eru settir upp er rétt að kynna sér reglugerðir um notkun slíkra hjólbarða í viðkomandi landi, fylki eða sveitarfélagi.

Keðjur á hjólbarða

Hliðar þverofinna hjólbarða eru þynnri en á öðrum hjólbörðum og sumar gerðir snjókeðja geta því valdið skemmdum á þeim. Því er ráðlegt að nota vetrarhjólbarða fremur en keðjur, ef þess er kostur.

Setjið aldrei keðjur á hjólbarða ökutækja sem búin eru álfelgum þar sem keðjurnar geta valdið skemmdum á felgunum. Ef óhjákvæmilegt reynist að nota keðjur skal nota vírkeðjur sem eru innan við 12 mm á þykkt.

Ábyrgðartrygging söluaðila ökutækisins tekur ekki til skemmda sem orsakast af rangri notkun snjókeðja. Snjókeðjur skal aðeins setja á framhjólbarðana.

⚠ **VARÚÐ**

- ***Gætið þess að snjókeðjurnar séu af þeirri stærð og gerð sem hæfir hjólbörðunum. Notkun snjókeðja af rangri gerð getur valdið skemmdum á yfirbyggingu og fjöðrun ökutækisins og kann að falla utan ábyrgðartryggingar söluaðila ökutækisins. Þá geta festikrókar keðjanna skemmst vegan núnings við íhluti ökutækisins og snjókeðjurnar losnað af hjólbarðanum. Gætið þess að snjókeðjurnar séu með SAE-vottun í S-flokki.***
- ***Eftir um það bil 0,5-1 km akstur skal ævinlega skoða keðjurnar aftur til að tryggja að þær hafi verið settar upp á réttan og öruggan hátt. Herðið keðjurnar eða setjið þær aftur á ef þær hafa losnað.***
- ***Ef hjólbarðar ökutækisins eru 18 tommur skal ekki nota snjókeðjur. Þær geta valdið skemmdum á ökutækinu (hjólum, fjöðrun og yfirbyggingu).***

Uppsetning á keðjum

Þegar keðjur eru settar á skal fylgja leiðbeiningum framleiðanda og herða keðjurnar eins mikið og unnt er. Þegar keðjur hafa verið settar á skal aka hægt. Ef hljóð heyrist sem bendir til að keðjurnar séu í snertingu við yfirbyggingu eða undirvagn er rétt að nema staðar og herða keðjurnar. Ef snerting virðist enn eiga sér stað skal hægja aksturinn þar til hljóðið þagnar. Takið keðjurnar niður um leið og komið er á rudda og snjólausa vegi.

⚠ **VIÐVÖRUN**
- Uppsetning á keðjum

Þegar snjókeðjur eru settar upp skal leggja ökutækinu á sléttum fleti fjarri umferð. Kveikið á viðvörunarljósum ökutækisins og setjið þríhyrningslaga viðvörunarskilti upp fyrir aftan ökutækið, ef það er tiltækt. Hafið ökutækið ævinlega í stöðuhemli og drepið á vélinni áður en snjókeðjur eru settar upp.

⚠ VIÐVÖRUN - Keðjur á hjólbarða

- **Notkun keðja getur skert aksturs- eiginleika ökutækisins.**
- **Akið ekki hraðar en 30 km/klst. eða samkvæmt ráðlögðum hámarkshraða framleiðanda keðjanna, hvort sem reynist lægra.**
- **Akið gætilega og sneiðið hjá þústum, holum, kröppum beygjum og öðrum hættum á veginum, sem gætu valdið hristingi ökutækisins.**
- **Forðist krappar beygjur eða læsta hemlun.**

⚠ VARÚÐ

- ***Séu snjókeðjur af rangri stærð eða rangt upp settar geta þær valdið skemmdum á hemlalögn, fjöðrun, yfirbyggingu og hjólum ökutækisins.***
- ***Hvenær sem hljóð bendir til þess að keðjurnar sláist við ökutækið skal stöðva akstur og herða keðjurnar.***

Index

A

AC inverter 4-142
Air bag warning label 3-70
Air bag warning light 3-51
Air bags.....3-47
Air bag warning label 3-70
Air bag warning light.....3-51
Curtain air bag 3-63
Driver's and passenger's front air bag 3-56
Inflation conditions 3-66
Non-inflation conditions 3-67
Operation 3-48
Side air bag 3-62
SRS Care 3-68
SRS components and functions 3-53
Air cleaner 8-38
Filter replacement 8-38
Air conditioner compressor label 9-10
Air conditioning system lubricants.....9-3
Air ventilation seat 4-140
Anti-lock brake system (ABS) 6-27
Appearance care 8-100
Exterior care.....8-100
Interior care 8-106
Armed stage 4-12
Assist Emergency Braking (AEB) 6-38
AEB warning message and system control 6-40
Brake operation 6-42
Limitation of the system 6-45
Recognizing pedestrians 6-48
Sensor to detect the distance from the vehicle in front (front radar) 6-42
System malfunction 6-43
System setting and activation 6-38
AUDIO (With Touch Screen) 5-8
Feature of Your Audio 5-9
Media Mode.....5-18
Phone Mode.....5-31
Radio Mode 5-16
Setup Mode 5-50
Voice Recognition Mode 5-40
Audio system 5-2
Antenna 5-2
AUX, USB port 5-4
How vehicle audio works 5-4
Steering wheel audio controls 5-3
Auto defogging system.....4-131
Auto light 4-99

B

Back-up lamp bulb replacement.....8-90
Battery.....8-46
Battery capacity label.....8-48
Battery recharging 8-48

For best battery service 8-46
Reset items 8-49
Battery replacement 4-10
Battery saver function 4-97
Before driving 6-4
Blind Spot Detection System(BSD) 6-81
BSD (Blind Spot Detection) /
LCA (Lane Change Assist) 6-82
RCTA (Rear cross traffic alert 6-84
Bonnet see the hood 4-28
Brake system 6-24
Anti-lock brake system (ABS) 6-27
Electronic stability control (ESC) 6-30
Emergency Stop Signal (ESS) 6-36
Hill-start assist control (HAC) 6-35
Parking brake 6-25
Power brakes 6-24
Vehicle stability management (VSM) 6-34
Brakes fluid 8-33
Checking the brake fluid level 8-33
Bulb replacement 8-81
Bulb replacement precaution 8-81
Bulb wattage 9-4
Button start/stop, see engine start/stop button 6-9

C

Camera (Rear view) 4-96
Capacities (Lubricants) 9-7
Care
Care of seat belts 3-32
Exterior care 8-100
Interior care 8-106
SRS Care 3-68
Tire care 8-50
Care of seat belts 3-32
Center console storage 4-133
Central door lock switch 4-17
Chains - Tire 6-96
Checking tire inflation pressure 8-51
Child restraint system 3-33
Installing a Child Restraint System (CRS) 3-36
ISOFIX anchorage and top-tether anchorage
(ISOFIX anchorage system) for children 3-37
Selecting a Child Restraint System (CRS) 3-34
Child-protector rear door lock 4-18
Clean air 4-132
Climate control air filter 8-40
Filter inspection 8-40
Climate control system
Automatic climate control system 4-119
Automatic heating and air conditioning 4-120
Coasting guide 4-66
Coat hook 4-146
Combined instrument, see instrument cluster 4-46
Coolant 8-28

Cooling fluid, see engine coolant 8-28
Crankcase emission control system 8-108
Cruise control system 6-49
Cruise control switch 6-50
To cancel cruise control 6-52
To decrease the cruising speed 6-51
To increase cruise control set speed 6-51
To resume cruising speed at more than approximately 30 km/h 6-53
To set cruise control speed.....6-50
To temporarily accelerate with the cruise control on 6-52
To turn cruise control off 6-53
Cup holder 4-136
Curtain air bag 3-63

D

Dashboard illumination, see instrument panel illumination 4-47
Dashboard, see instrument cluster 4-46
Day/night rearview mirror 4-41
Declaration of Conformity (chapter 5).....5-53
CE for EU 5-53
NCC for Taiwan.....5-54
TRA for OMAN 5-55
Declaration of conformity (chapter 9) 9-11
Defogging (Windshield) 4-129
Defroster (Rear window) 4-113
Defrosting (Windshield) 4-129
Dimensions 9-2
Disarmed stage 4-14
Display illumination, see instrument panel illumination 4-47
Displays, see instrument cluster 4-46
Distance to empty 4-51
Door lock/unlock features 4-18
Door locks.....4-15
Central door lock switch 4-17
Child-protector rear door lock 4-18
Door lock/unlock features 4-18
From inside the vehicle 4-16
From outside the vehicle 4-15
Drinks holders, see cup holders 4-136
Driver position memory system 3-12
Driver's and passenger's front air bag.....3-56
Driving at night.....6-93
Driving in flooded areas 6-93
Driving in the rain.....6-93
Driving off-road 6-93
Dual clutch transmission 6-15
Manual mode 6-20
Shift-lock override 6-21
Dual clutch transmission shift indicator.....4-52
Dual clutch transmission shift indicator in sports mode.....4-53

E

Economical operation 6-88
Electrochromic mirror (ECM) 4-41
Electronic power steering 4-38
Electronic stability control (ESC) 6-30
Emergency starting 7-5
Jump starting 7-5
Emergency Stop Signal (ESS) 6-36
Emergency tailgate safety release.....4-21
Emergency while driving 7-3
Emission control system.....8-108
Crankcase emission control system.....8-108
Evaporative emission control System 8-108
Exhaust emission control system.....8-109
Energy flow.....4-58
Engine 9-2
Engine clutch actuator fluid 8-34
Checking the engine clutch actuator fluid level 8-34
Engine compartment.....2-6
Engine compartment.....8-4
Engine coolant 8-28
Changing the coolant 8-32
Checking the coolant level.....8-28
Engine coolant 8-29
Inverter coolant 8-30
Engine number 9-10
Engine oil 8-26
Changing the engine oil and filter 8-27
Checking the engine oil level 8-26
Engine overheats.....7-8
Engine start/stop button 6-9
Engine start/stop button position 6-9
Illuminated engine start/stop button 6-9
Starting the hybrid system 6-12
Engine start/stop button illumination 6-9
Engine start/stop button position 6-9
Engine will not start 7-4
Evaporative emission control System.....8-108
Exhaust emission control system 8-109
Explanation of scheduled maintenance items 8-23
Air cleaner filter.....8-24
Air conditioning refrigerant 8-25
Brake discs, pads, calipers and rotors 8-25
Brake fluid 8-25
Brake hoses and lines.....8-25
Coolant (Engine / Inverter) 8-24
Cooling system 8-24
Drive shafts and boots 8-25
Dual clutch transmission fluid.....8-24
Engine oil and filter 8-23
Fuel filter (for gasoline).....8-23
Fuel lines, fuel hoses and connections 8-23
HSG (Hybrid starter & generator) belt 8-23
Parking brake 8-25
Spark plugs (for gasoline engine) 8-24

Steering gear box,
linkage & boots/lower arm ball joint.....8-25
Suspension mounting bolts 8-25
Vacuum crankcase ventilation hoses 8-24
Vapor hose (for gasoline engine) and
fuel filler cap 8-23
Exterior care 8-100
Exterior features 4-149
Exterior features
Roof rack 4-149
Exterior overview (Front).....2-2
Exterior overview (Rear) 2-3

F

Flat tire 7-16
Changing tires 7-18
Jack and tools.....7-16
Removing the spare tire.....7-17
Storing the spare tire 7-17
Floor mat anchor(s) 4-147
Fluid
Brake fluid 8-33
Engine clutch actuator fluid.....8-34
Washer fluid.....8-36
Fog lamp/DRL bulb replacement 8-87
Fog light (front) 4-102
Fog light (rear) 4-102
Folding the outside rearview mirror 4-44
Folding the rear seat 3-13
Front seat adjustment (manual) 3-6
Front seat adjustment (power) 3-7
Front seat belt warning 3-20
Front turn signal lamp bulb replacement 8-86
Fuel filler lid 4-30
Fuel Gauge 4-50
Fuel requirements 1-3
Fuses 8-62
Engine compartment fuse replacement 8-65
Fuse/relay panel description 8-67
Inner panel fuse replacement 8-63

G

Gauges 4-48
Distance to empty 4-51
Fuel Gauge.....4-50
Hybrid Battery SOC (State of Charge) Gauge 4-49
Hybrid System Gauge 4-49
Odometer 4-52
Outside Temperature Gauge 4-52
Speedometer.....4-48
Glove box 4-133
Gross vehicle weight.....9-3

H

Hazard warning flasher.....7-2
Hazardous driving conditions.....6-90
Headlamp (HID type) bulb replacement 8-84
Headlamp (High/Low beam) bulb replacement 8-85
Headlamp and front fog lamp aiming (for Europe) 8-94
Headlight (Headlamp) escort function 4-97
Headlight position.....4-99
Headrest (rear) 3-16
Headrest(front) 3-8
Heated steering wheel.....4-39
HEV power train.....1-6
High - beam operation 4-100
High mounted stop lamp bulb replacement 8-90
Highway driving 6-94
Hill-start assist control (HAC) 6-35
Hood 4-28
Horn 4-40
How to use this manual 1-2
Hybrid Battery SOC (State of Charge) Gauge.....4-49
Hybrid System Gauge.....4-49

I

Ignition switch illumination 6-6
Ignition switch position 6-6
Immobilizer system 4-5
Indicator Lights.....4-82
Inflation conditions(Air bags) 3-66
Inside rearview mirror 4-41
Instrument cluster 4-46
  Coasting guide 4-66
  Indicator Lights 4-82
  Instrument Cluster Control 4-47
  LCD Modes 4-60
  LCD window 4-54
  LCD window Control 4-48
  Service Mode 4-61
  User settings mode.....4-63
  Warning and Indicator lights 4-74
  Warning lights 4-74
Instrument panel overview 2-5
Interior care.....8-106
Interior features.....4-136
  AC inverter.....4-142
  Air ventilation seat.....4-139
  Ashtray.....4-136
  Cargo security screen 4-148
  Coat hook.....4-146
  Cup holder 4-136
  Floor mat anchor(s) 4-147
  Luggage net holder 4-147
  Power outlet 4-139
  Seat warmer 4-138
  Sunvisor 4-137

USB charger....4-141
Wireless smart phone charging system....4-143
Interior lamp AUTO turn off function....4-109
Interior light....4-109
Interior lamp AUTO turn off function....4-109
Map lamp....4-109
Room lamp....4-110
Tailgate room lamp....4-111
Vanity mirror lamp....4-111
Interior overview....2-4
ISO FIX system....3-37

J

Jack and tools....7-16
Jump starting....7-5

K

Key operations....4-4
Key positions....6-6
Ignition switch position....6-6
Illuminated ignition switch....6-6
Starting the hybrid system....6-8
Keys....4-4
Immobilizer system....4-5
Key operations....4-4
Record your key number....4-4

L

Label
Air bag warning label....3-70
Air conditioner compressor label....9-10
Refrigerant label....9-11
Tire sidewall labeling....8-56
Tire specification and pressure label....9-10
Vehicle certification label....9-9
Lane Keeping Assist System (LKAS)....6-73
LKAS function change....6-80
LKAS malfunction....6-79
LKAS operation....6-74
Lap belt....3-24
Lap/Shoulder belt....3-22
LCD Modes....4-60
LCD window....4-54
Energy flow....4-58
Over view....4-54
Trip information (Trip computer)....4-54
License plate lamp bulb replacement....8-90
Light bulb position (Front)....8-83
Light bulb position (Rear)....8-83
Light bulb position (Side)....8-84
Light bulbs....8-81
Back-up lamp bulb replacement....8-90
Bulb replacement precaution....8-81
Fog lamp/DRL bulb replacement....8-87

Front turn signal lamp bulb replacement.....8-86
Headlamp (HID type) bulb replacement 8-84
Headlamp (High/Low beam) bulb replacement.....8-85
Headlamp and front fog lamp aiming (for Europe)....8-94
High mounted stop lamp bulb replacement 8-90
License plate lamp bulb replacement 8-90
Light bulb position (Front) 8-83
Light bulb position (Rear) 8-83
Light bulb position (Side) 8-84
Map lamp bulb replacement 8-91
Room lamp bulb replacement 8-92
Side repeater lamp (LED type) bulb replacement.....8-91
Stop and tail lamp (LED type) bulb replacement 8-89
Stop and tail lamp bulb replacement 8-87
Tail lamp (inside) bulb replacement 8-88
Tailgate room lamp bulb replacement 8-93
Vanity mirror lamp bulb replacement 8-92
Lighting.....4-97
Auto light 4-98
Battery saver function 4-97
Front fog light 4-102
Headlight (Headlamp) escort function.....4-97
Headlight leveling device 4-103
Headlight position 4-98
High - beam operation 4-100
Parking light position.....4-98
Rear fog light 4-102
Turn signals 4-101
Lubricants and capacities 9-7
Luggage box 4-135
Luggage volume 9-3

M

Maintenance
Engine compartment 8-4
Explanation of scheduled maintenance items 8-23
Maintenance services.....8-5
Owner maintenance 8-7
Scheduled maintenance service 8-9
Tire maintenance 8-56
Maintenance schedule.....8-10
Normal Maintenance Schedule
- For Gasoline Engine
[For Europe (Except Russia)] 8-10
Maintenance Under Severe Usage Conditions
- For Gasoline Engine
[For Europe (Except Russia)] 8-14
Normal Maintenance Schedule
- For Gasoline Engine
[Except Europe (Including Russia)] 8-16
Maintenance Under Severe Usage Conditions
- For Gasoline Engine
[Except Europe (Including Russia)] 8-21
Scheduled maintenanceservice precaution 8-9
Maintenance services 8-5

Owner maintenance precautions 8-5
Owner's responsibility 8-5
Manual mode - Dual clutch transmission.....6-20
Map lamp 4-109
Map lamp bulb replacement 8-91
Mirrors 4-41
Day/night rearview mirror 4-41
Electrochromic mirror (ECM) 4-41
Folding the outside rearview mirror 4-44
Inside rearview mirror 4-41
Outside rearview mirror.....4-42
Remote control.....4-43

N

Non-inflation conditions(Air bags) 3-67

O

Odometer 4-52
Oil (Engine) 8-26
Outside rearview mirror 4-42
Outside Temperature Gauge 4-52
Over view 4-54
Overheats 7-8
Owner maintenance 8-7
Owner maintenance schedule 8-7

P

Parking assist system 4-91
Types of warning indicator and sound.....4-92
Parking brake 6-25
Parking brake 8-37
Checking the parking brake.....8-37
Parking light position 4-98
Power brakes.....6-24
Power outlet 4-140
Power window lock button 4-26
Precautions 3-29
Pre-tensioner seat belt.....3-26

R

Rear parking assist system 4-87
Type of warning sound 4-88
Rear passenger's seat belt warning.....3-21
Rear seat
Folding the rear seat.....3-13
Rear view camera 4-96
Recommended lubricants and capacities 9-7
Recommended SAE viscosity number 9-8
Record your key number 4-4
Refrigerant label 9-11
Remote control (outside rear view mirror).....4-43
Remote keyless entry 4-7

Battery replacement 4-10
Remote keyless entry system operations 4-7
Smart key system operation 4-8
Transmitter precautions 4-9
Remote keyless entry system operations 4-7
Resetting the sunroof 4-36
Road warning 7-2
Rocking the vehicle 6-91
Room lamp 4-110
Room lamp bulb replacement.....8-92
Rotation (Tire) 8-52

S

Scheduled maintenance service 8-9
Normal Maintenance Schedule
- For Gasoline Engine
[For Europe (Except Russia)] 8-10
Maintenance Under Severe Usage Conditions
- For Gasoline Engine
[For Europe (Except Russia)] 8-14
Normal Maintenance Schedule
- For Gasoline Engine
[Except Europe (Including Russia)] 8-16
Maintenance Under Severe Usage Conditions
- For Gasoline Engine
[Except Europe (Including Russia)] 8-21
Scheduled maintenanceservice precaution 8-9
Seat belt restraint system 3-18
Seat belts.....3-18
Care of seat belts 3-32
Front seat belt warning 3-20
Lap belt 3-24
Lap/Shoulder belt.....3-22
Precautions.....3-29
Pre-tensioner seat belt 3-26
Rear passenger’s seat belt warning 3-21
Seat belt restraint system 3-18
Seat warmer 4-138
Seatback pocket (front).....3-11
Seats 3-2
Front seat adjustment (manual) 3-6
Front seat adjustment (power) 3-7
Headrest (rear) 3-16
Headrest(front).....3-8
Seatback pocket (front) 3-11
Service Mode 4-61
Shift-lock override - Dual clutch transmission.....6-21
Side air bag 3-62
Side repeater lamp (LED type) bulb replacement 8-91
Sliding the sunroof 4-34
Smart cruise control system 6-54
Limitations of the system.....6-64
Speed setting 6-55
To adjust the sensitivity of Smart Cruise Control 6-63
To convert to cruise control mode 6-64

Vehicle to vehicle distance setting.....6-60
Smart key system operation 4-8
Smooth cornering 6-92
Snow tires 6-94
Spare tire
Changing tires 7-18
Removing the spare tire.....7-17
Storing the spare tire 7-17
Special driving conditions 6-90
Driving at night 6-93
Driving in flooded areas 6-93
Driving in the rain 6-93
Driving off-road.....6-93
Hazardous driving conditions 6-90
Highway driving 6-94
Reducing the risk of a rollover 6-90
Rocking the vehicle 6-91
Smooth cornering.....6-92
Speed limit control system 6-70
To set speed limit.....6-70
To turn off the speed limit control.....6-72
Speedometer 4-48
SRS Care.....3-68
SRS components and functions 3-53
Starting difficulties, see engine will not start.....7-4
Starting the engine - With a smart key 6-9
Starting the hybrid system - With an ignition key 6-8
Steering wheel 4-38
Electronic power steering 4-38
Heated steering wheel 4-39
Horn 4-40
Tilt and telescopic steering 4-39
Stop and tail lamp (LED type) bulb replacement.....8-89
Stop and tail lamp bulb replacement 8-87
Storage compartment 4-133
Center console storage.....4-133
Glove box.....4-133
Sunglass holder 4-134
Sunglass holder.....4-134
Sunroof 4-33
Resetting the sunroof.....4-36
Sliding the sunroof.....4-34
Sunroof open warning 4-37
Sunshade 4-36
Tilting the sunroof 4-35
Sunroof open warning 4-37
Sunshade.....4-36
Sunvisor 4-137

T

Tail lamp (inside) bulb replacement.....8-88
Tailgate 4-19
Closing the tailgate 4-20
Emergency tailgate safety release 4-21
Opening the tailgate.....4-19

Tailgate room lamp 4-111
Tailgate room lamp bulb replacement 8-93
Tether anchor system 3-39
Theft-alarm stage 4-13
Theft-alarm system 4-12
Armed stage 4-12
Disarmed stage 4-14
Theft-alarm stage 4-13
Tilt and telescopic steering 4-39
Tilting the sunroof 4-35
Tire chains 6-96
Tire mobility kit(T.M.K) 7-27
Tire pressure monitoring system 7-9
Tire replacement 8-54
Tire rotation 8-52
Tire specification and pressure label 9-10
Tires and wheels 8-50
Checking tire inflation pressure 8-51
Low aspect ratio tire 8-60
Recommended cold tire inflation pressures 8-50
Tire care 8-50
Tire maintenance 8-56
Tire replacement 8-54
Tire rotation 8-52
Tire sidewall labeling 8-56
Tire traction 8-56
Wheel alignment and tire balance 8-53
Wheel replacement 8-55
Tires and wheels (except europe) 9-6
Tires and wheels (for europe) 9-5
Towing 7-36
Emergency towing 7-38
Removable towing hook 7-37
Trailer Towing 6-99
Driving with a trailer 6-102
Hitches 6-101
If you do decide to pull a trailer 6-107
Maintenance when trailer towing 6-106
Safety chains 6-101
Trailer brakes 6-102
Transmission - Dual clutch transmission 6-15
Transmitter precautions 4-9
Trip information (Trip computer) 4-54
Turn signals 4-101

U

USB charger 4-144
User settings mode 4-63

V

Vanity mirror lamp 4-111
Vanity mirror lamp bulb replacement 8-92
Vehicle break-in process 1-6
Vehicle certification label 9-9

Vehicle handling instructions 1-6
Vehicle identification number (VIN) 9-9
Vehicle stability management (VSM) 6-34
Vehicle weight 6-110

W

Warning and Indicator lights 4-74
Warning lights.....4-74
Warning Messages 4-67
Washer fluid 8-36
  Checking the washer fluid level 8-36
Welcome system 4-112
Wheel alignment and tire balance 8-53
Wheel replacement 8-55
Windows 4-22
  Power window lock button 4-26
Windshield defrosting and defogging.....4-129
Windshield washers 4-107
Windshield wipers 4-105
Winter driving.....6-95
  Snow tires.....6-95
  Tire chains 6-96
Wiper blades 8-42
  Blade inspection.....8-42
  Blade replacement 8-42
Wipers and washers 4-104
  Rear window wiper and washer.....4-108
Windshield washers 4-107
Windshield wipers 4-105
Wireless smart phone charging system 4-143