Kia, THE COMPANY

Thank you for becoming the owner of a new Kia vehicle.

As a global car manufacturer focused on building high-quality, value for money prices, Kia Motors is dedicated to providing you with a customer service experience that exceeds your expectations.

At all of our Kia dealerships you will be treated with warmth, hospitality and professionalism by people who care based on our **"Family-like Care"** promise.

All information contained in this Owner's Manual was accurate at the time of publication. However, Kia reserves the right to make changes at any time so that our policy of continual product improvement can be carried out.

This manual applies to all trims of this vehicle and includes images, descriptions, and explanations of optional as well as standard equipment. As a result, some material in this manual may not be applicable to your specific Kia vehicle. Some images are shown for illustration only and may show features that differ from those on your vehicle.

Enjoy your vehicle and Kia's "Family-like Care" experience!

Dear Customer,

Thank you for selecting your new Kia vehicle.

As a global car manufacturer focused on building high-quality vehicles with exceptional value, Kia is dedicated to providing you with a customer service experience that exceeds your expectations.

This Owner's Manual will acquaint you with the operation of features and equipment that are either standard or optional on this vehicle, along with the maintenance needs of this vehicle. Therefore, you may find some description and illustrations not applicable to your vehicle. You are advised to read this publication carefully and follow the instructions and recommendations. Please always keep this manual in the vehicle for your, and any subsequent owner's reference.

All information contained in this Owner's Manual was accurate at the time of publication. However, as Kia continues to make improvements to its products the company reserves the right to make changes to this manual or any of its vehicles at any time without notice and without incurring any obligations. Please drive safely, and enjoy your Kia vehicle!

© 2021 Kia Corporation

All rights reserved. Reproduction by any means, electronic or mechanical, including photocopying, recording, or by any information storage and retrieval system or translation in whole or part is not permitted without written authorization from Kia Corporation.

Printed in Korea

Table of contents

Hybrid system overview	1
Introduction	2
Your vehicle at a glance	3
Safety features of your vehicle	4
Features of your vehicle	5
Driving your vehicle	6
What to do in an emergency	7
Maintenance	8
Specifications & Consumer information	9
Appendix	10
Alphabetical index	I

Hybrid system overview

1

HEV (hybrid electric vehicle) system..... 1-02
PHEV (plug-in electric vehicle) system..... 1-03
Charging the plug-in hybrid vehicle..... 1-04
Charging information..... 1-04
Charging time..... 1-04
Charging types..... 1-05
Charging status..... 1-06
Charging connector AUTO/LOCK mode..... 1-07
When the charging connector is locked..... 1-07
Scheduled charging 1-07
Charging precautions..... 1-09
AC charge..... 1-10
Trickle charger (Portable charging cable)..... 1-15
Driving the hybrid/plug-in hybrid vehicle..... 1-33
Changing plug-in hybrid mode (Plug-in hybrid vehicle)..... 1-33
Warning and indicator lights..... 1-34
Niro hybrid energy flow..... 1-39
Vehicle stop..... 1-39
EV propulsion..... 1-39
Power assist..... 1-39
Engine only propulsion..... 1-40
Engine generation..... 1-40
Regeneration..... 1-40
Engine brake..... 1-41
Power reserve..... 1-41
Engine generation/motor drive..... 1-41
Engine generation/regeneration..... 1-42
Engine brake/regeneration..... 1-42
Niro plug-in hybrid energy flow..... 1-43
Aux. Battery Saver+ (For plug-in hybrid,)..... 1-43
Starting the hybrid/plug-in hybrid vehicle (smart key)..... 1-44
Starting the hybrid system..... 1-44
Economical and safe operation of hybrid system..... 1-44
Components of the hybrid/plug-in hybrid vehicle..... 1-45
Safety plug..... 1-48
Some special features of the hybrid vehicle..... 1-48
Virtual Engine Sound System (VESS)..... 1-49
High voltage battery air intake..... 1-49
If an accident occurs..... 1-50
When the hybrid vehicle shuts off..... 1-51

HEV (HYBRID ELECTRIC VEHICLE) SYSTEM

The Kia Hybrid Electric Vehicle (HEV) uses both the gasoline engine and the electric motor for power. The electric motor is run by a 240V high-voltage HEV battery.
Depending on the driving conditions, the HEV computer selectively operates between the engine and the electric motor or even both at the same time.
Fuel efficiency increases when the engine is at idle, or when the vehicle is driven by the electric motor with the HEV battery.
The HEV battery charge must be maintained for the times when the engine acts as a generator, such as when stopped at idle.
Charging also occurs when decelerating or by regenerative braking.

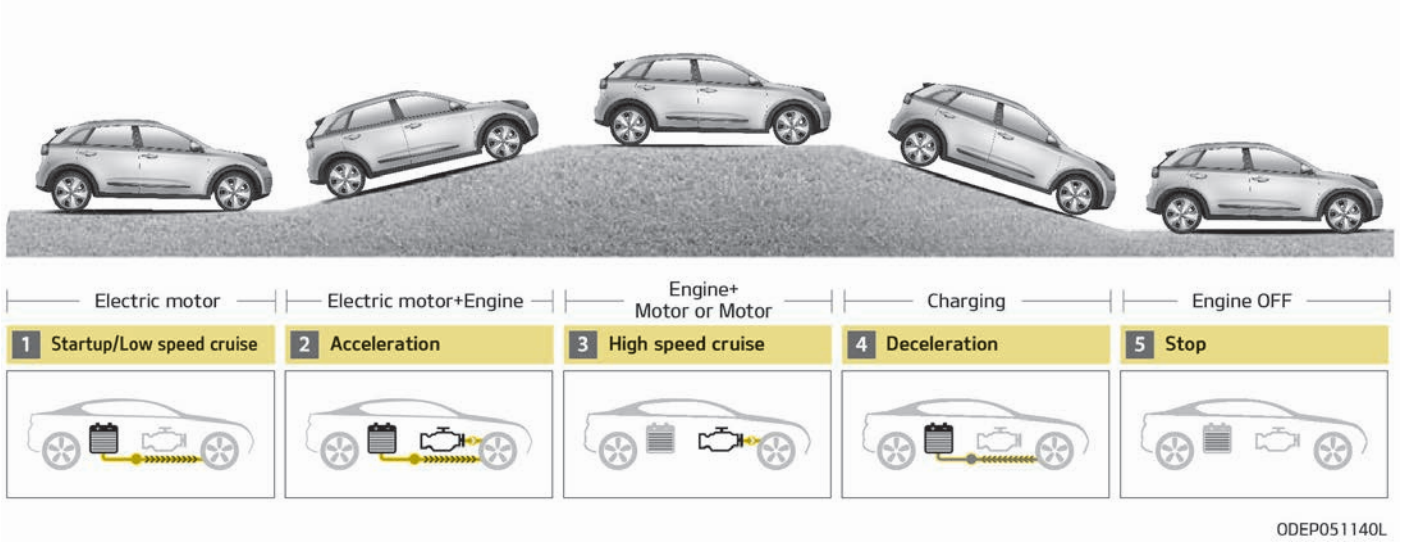

PHEV (PLUG-IN ELECTRIC VEHICLE) SYSTEM

The Kia Plug-in Hybrid Electric Vehicle (PHEV) shares the characteristics of both a conventional hybrid electric vehicle and an all-electric vehicle.
When used as a conventional hybrid electric vehicle, the HEV computer selectively operates between the engine and the electric motor or even both at the same time.
When it is operating in the electric vehicle mode, the vehicle is driven only using the electric motor over a certain distance until the hybrid battery becomes low. The driving distance in EV mode depends on customer driving style and road conditions. Aggressive driving maneuvers may at times temporarily enable the engine to operate for maximum power.
The hybrid battery can be fully charged by connecting a plug to an external electric power source.
An engine can be turned on due to factors such as heater and a frequent operation of the accelerator pedal by a driver in CD mode.

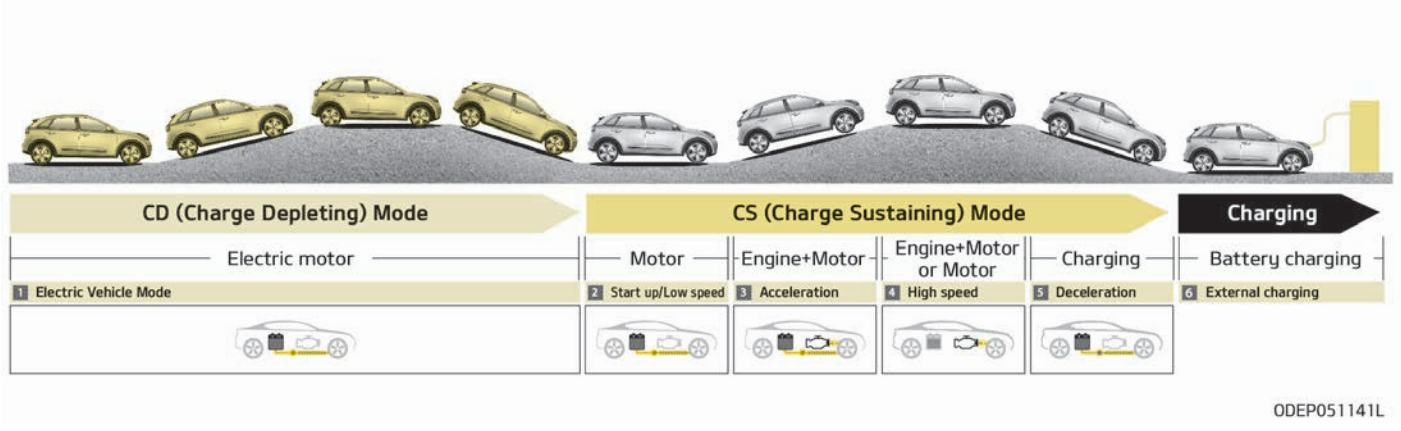

CHARGING THE PLUG-IN HYBRID VEHICLE

Charging information

- AC Charger: The plug-in hybrid vehicle is charged by plugging into a AC charger installed in your home or a public charging station. (For further details, refer to the “AC charge” on page 1-10.)
- Trickle Charger: The plug-in hybrid vehicle can be charged by using household electricity.
  The electrical outlet in your home must comply with regulations and can safely accommodate the Voltage / Current (Amps) / Power (Watts) ratings specified on the trickle charge. Use only as a backup charger.

Charging time

- AC Charger: Takes about 2 hours 15 minutes at room temperature (Can be charged to 100%.). Depending on the condition and durability of the high-voltage battery, charger specifications, and ambient temperature, the time required for charging the high-voltage battery may vary.
- Trickle Charger: For charging at home. Please note that the Trickle Charger is slower than the AC Charger.

Charging types

Category	Charging Inlet (Vehicle)	Charging Connector	Charging Outlet		Charging Method	Charging Time
AC Charger					AC charger installed in homes or public charging stations	Approximately 2 hours 15 minutes (to fully charge, 100%)
Trickle Charger					Household current	For charging at home. Please note that the Trickle Charger is slower than the AC Charger

- Depending on the condition and durability of the high voltage battery, charger specifications, and ambient temperature, the time required for charging the high voltage battery may vary.
- Actual charger image and charging method may vary in accordance with the charger manufacturer.

Charging status

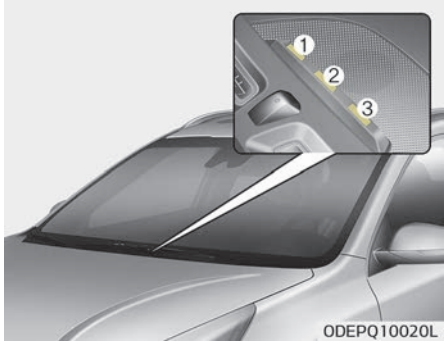

When charging the high voltage battery, the charge level can be checked from outside the vehicle.

Operation of Charging Indicator Lamp			Details
(1)	(2)	(3)	
⟲ (OFF)	⟲ (OFF)	⟲ (OFF)	Not Charged

Operation of Charging Indicator Lamp			Details	
(1)	(2)	(3)		
Blinking	⟲ (OFF)	⟲ (OFF)	Charging	0~33%
● (ON)	Blinking	⟲ (OFF)		34~66%
● (ON)	● (ON)	Blinking		67~99%
● (ON)	● (ON)	● (ON)	Charging complete (100%) (turns OFF in 5 seconds)	
Blinking	Blinking	Blinking	Error while charging	
⟲ (OFF)	⟲ (OFF)	Blinking	Charging 12 V auxiliary battery or reserved air conditioner is operating	

Operation of Charging Indicator Lamp			Details
(1)	(2)	(3)	
⟲ (OFF)	Blinking	⟲ (OFF)	Reserved charging is operating (turns OFF after 3 minutes) or interruptions that temporarily prevent charging (e.g. power failure)

Charging connector AUTO/LOCK mode

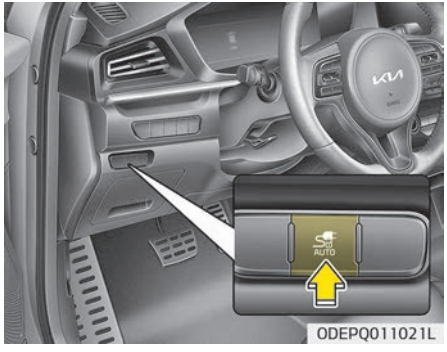

You may select when the charging connector can be locked and unlocked in the charging inlet.
Press the button to change between AUTO mode and LOCK mode.

When the charging connector is locked

	LOCK	AUTO
Before charging	O	X
While charging	O	O
Finished charging	O	X

- LOCK mode (button indicator off):
  The connector locks when the charging connector is plugged into the charging inlet. The connector is locked until all doors are unlocked by the driver. This mode can be used to prevent charging cable theft.
  - If the charging connector is unlocked when all doors are unlocked, but the charging cable is not disconnected within 15 seconds, the connector will be automatically locked again.
  - If the charging connector is unlocked when all doors are unlocked, but all doors are locked again, immediately, the connector will be automatically locked again.
- AUTO mode (button indicator on):
  The connector locks when charging starts. The connector unlocks when charging is complete. This mode can be used when charging in a public charging station.
  If the connecter does not unlock automatically after the charging is completed in AUTO mode, the connector will unlock when all the doors are unlocked.

Scheduled charging (if equipped)

- You can set reserved charging using the Infotainment System.
  Refer to the Infotainment System for detailed information about setting reserved charging.
- Scheduled charging can only be done when using a AC charger or the portable charging cable (ICCB: In-Cable Control Box).

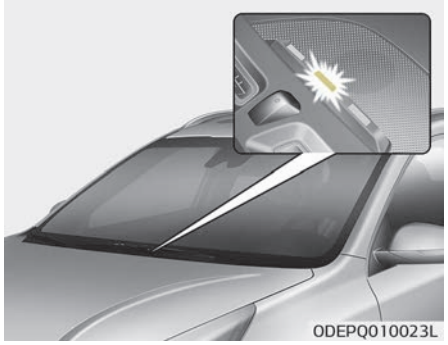

- When scheduled charging is set and the AC charger or the portable charging cable (ICCB: In-Cable Control Box) is connected for charging, the indicator lamp blinks (for 3 minutes) to indicate that scheduled charging is set.
- When scheduled charging is set, charging is not initiated immediately when the AC charger or portable charging cable (ICCB: In-Cable Control Box) is connected.
- If charging is required immediately, turn off the scheduled charge using the Infotainment System and UVO application, or press the vehicle's scheduled charge release button (OFF).
- When the scheduled charge is set, the charge start time is calculated by itself. In some cases, charging may start immediately after connecting the charger.

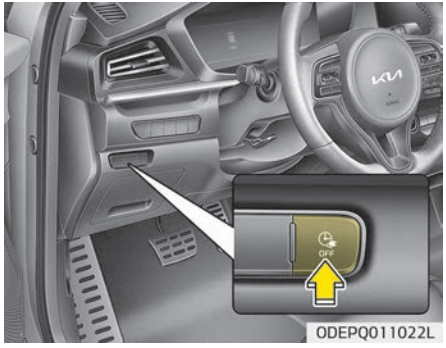

- If you press the scheduled charging deactivation (OFF) button to immediately charge the battery, charging must be initiated 3 minutes after the charging cable has been connected.
  When you press the scheduled charging deactivation (OFF) button for immediate charging, the scheduled charge setting is not completely deactivated. If you need to completely deactivate the scheduled charge setting, use the Infotainment System to finalize the deactivation.
  Refer to “AC charge” on page 1-10 or “How to Connect AC Charger” on page 1-11 for details about connecting the AC charger and the portable charger (ICCB: In-Cable Control Box).

Charging precautions

■ AC charger

⚠ WARNING

■ Fires caused by dust or water

Do not connect the charging cable connector plug to the vehicle if there is water or dust on the charging inlet. Connecting while there is water or dust on the charging cable connector and plug may cause a fire or electric shock. There may be a risk of fire and injury when using old worn out public electrical outlets.

⚠ WARNING

■ Interference with electronic medical devices

When using medical electric devices such as an implantable cardiac pacemaker, make sure to ask the medical team and manufacturer whether charging your electric vehicle will impact the operation of the medical devices. In some instances, electromagnetic waves that are generated from the charger can seriously impact medical electric devices such as an implantable cardiac pacemaker.

⚠ WARNING

■ Touching the charging connector

Do not touch the charging connector, charging plug, and the charging inlet when connecting the cable to the charger and the charging inlet on the vehicle. Doing so may result in electrocution.

- Comply with the following in order to prevent electrical shock when charging:
  - Use a waterproof charger
  - Make sure to not touch the charging connector and charging plug when your hand is wet
  - Do not charge when there is lightning
  - Do not charge when the charging connector and plug is wet

⚠ WARNING

■ Charging cable

- **Immediately stop charging when you find abnormal symptoms (smell, smoke).**
- **Replace the charging cable if the cable coating is damaged to prevent electrical shock.**

(Continued)

(Continued)

- **When connecting or removing the charging cable, make sure to hold the charging connector handle and charging plug.**
  If you pull the cable itself (without using the handle), the internal wires may disconnect or get damaged. This may lead to electric shock or fire.

⚠ WARNING

■ Cooling fan

Do not touch the cooling fan while vehicle is charging. When the vehicle is switched OFF while charging, the cooling fan inside the motor compartment may automatically operate.

- Always keep the charging connector and charging plug in clean and dry condition. Be sure to keep the charging cable in a condition where there is no water or moisture.
- Make sure to use the designated charger for charging the vehicle. Using any other charger may cause failure.
- Before charging the battery, turn the vehicle OFF.
- Be careful not to drop the charging connector. The charging connector can be damaged.

AC charge

■ AC charger

OJFHPQ016021LD

■ AC charger cable

ODEPQ017061LB

You can charge your vehicle by plugging into a public charger at a charging station.

How to Connect AC Charger

1. Depress the brake pedal and apply the parking brake.
2. Turn OFF all switches, move the shift lever to P (Park), and turn OFF the vehicle.
3. After unlocking doors, open the charging door by pressing it.
4. Open the charging door by pressing circle mark (o) area on the right edge of the charging door. If the vehicle doors are locked, the charging door will not open.

✻ NOTICE

The charging door does not open when the theft alarm system is armed.

⚠ CAUTION

If you cannot open the charging door due to freezing weather, tap lightly or remove any ice near the charging door. Do not try to forcibly open the charging door. The charging door may be broken if it is forcibly opened.

5. Remove any dust on the charging connector and charging inlet.
6. Hold the charging connector handle. Then, insert it into the charging inlet, until you hear a click sound. If it is not fully connected, a bad connection between the charging connector and the charging terminals may cause a fire.

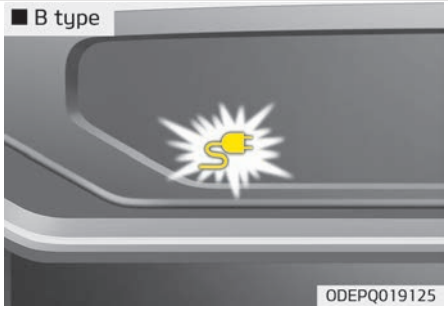

7. Check if the charging cable connection indicator of the high voltage battery in the instrument cluster is turned ON.
   Charging does not occur when the indicator is OFF. When the charging connector is not connected properly, reconnect the charging cable to charge.

❊ NOTICE

- The charging is in progress only with the shift lever is in P (Park). Charging the battery with the Engine Start/Stop button in the ACC position is possible. However, it may discharge the 12-V battery. Thus, if possible, charge the battery with the Engine Start/Stop button in the OFF position.
- Moving the shift lever from P (Park) to R (Reverse)/ N(Neutral)/D (Drive) stops the charging process. To restart the charging process, move the shift lever to P (Park), press the Engine Start/Stop button to the OFF position, and disconnect the charging cable. Then, connect the charging cable.

❊ Charging connector AUTO / LOCK mode
When the charging connector is plugged into the charging inlet, the connector lock timing varies with the modes selected by pressing the button.

- LOCK mode: The connector locks automatically when the charging connector is connected normally.
- AUTO mode: The connector locks when charging starts while the charging connector is connected normally.

For more details, refer to the "Charging connector AUTO/LOCK mode" on page 1-07.

❊ Locking/unlocking the charging door
The charging door lock/unlock function works only when the following conditions are satisfied with the charging door closed.
If the unlock function does not work, use the emergency charging door unlock method to unlock the charging door. (For more details, refer to the "Unlock charging door in emergency" on page 1-13)

1. Conditions for lock:
   1. When locking doors from outside the vehicle with the charging door closed
   2. When locking the driver's door using a spare key
   3. When locking doors using a smart key

4. When pressing the door lock/ unlock button on the front door outside handle while the smart key is detected and doors are unlocked
5. When locking all vehicle doors with the charging door closed (When locking doors with functions such as spare key, smart key, door lock button on the outside door handle, central door lock switch, auto door lock.)

2. Conditions for unlock:
   1. When unlocking doors from outside the vehicle with the charging door closed When unlocking the driver's door using a spare key
   2. When unlocking doors using a smart key
   3. When locking doors using a smart key
   4. When pressing the door lock/ unlock button on the front door outside handle while the smart key is detected and doors are locked
   5. When unlocking all vehicle doors with the charging door closed (When unlocking doors with functions such as spare key, smart key, door lock button on the outside door handle, central door lock switch, auto door lock.)

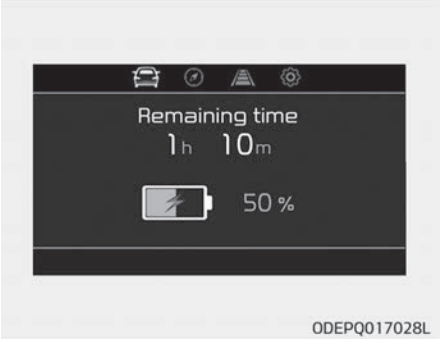

ODEPQ017028L

8. After charging has started, the estimated charging time is displayed on the instrument cluster for about 1 minute. It is also displayed, when the driver's door is opened with charging in progress. When scheduled charging is set, the estimated charging time is displayed as "--" .

Unlock connector in emergency

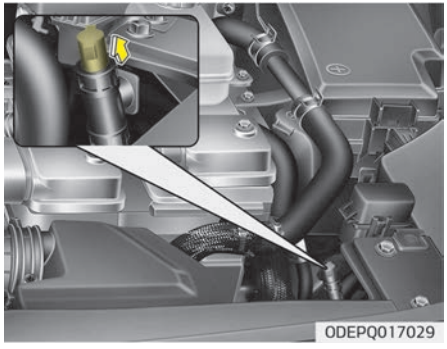
ODEPQ017029

If the charging connector does not unlock for some reason, open the hood and slightly pull the emergency cable as shown above. The charging door will then open.
If a charging door is not opened immediately with emergency cable in operation, press a charging door lightly and pull emergency cable again.
The charging cable lock may not work properly when foreign materials such as dust enter the cable or the cable is encrusted with ice.

In that case, the charging cable may not be disconnected or locked, or the vehicle may not be charged. If this happens, open the hood and pull the emergency cable lightly 2 to 3 times and then try to disconnect the charging cable or start recharging.

How to disconnect AC Charger

1. The vehicle doors must be unlocked in order to be able to disconnect the charging connector. A lock system prevents charger cable disconnection when the vehicle's doors are locked.

✻ NOTICE

In order to disconnect the charging connector, unlock the doors to unlatch the charging connector lock system. If not, the charging connector and the vehicle's charging inlet may be damaged.

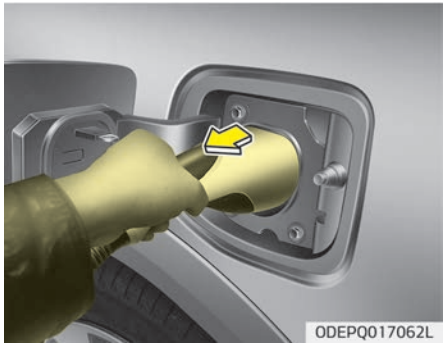

2. Hold the charging connector handle and pull it out.
   To prevent charging cable theft, the charging connector cannot be disconnected from the inlet when the doors are locked. Unlock all doors to disconnect the charging connector from the inlet.
   However, if the vehicle is in the charging connector AUTO mode, the charging connector automatically unlocks from the inlet when charging is completed.
   If the connecter does not unlock automatically after the charging is completed in AUTO mode, the connector will unlock when all the doors are unlocked.
   For more details, refer to “Charging connector AUTO/LOCK mode” on page 1-07 in this chapter.

✻ NOTICE

When disconnecting the charging connector, do not try to disconnect it by force while not pressing the release button. This may damage the charging connector and vehicle charging inlet.

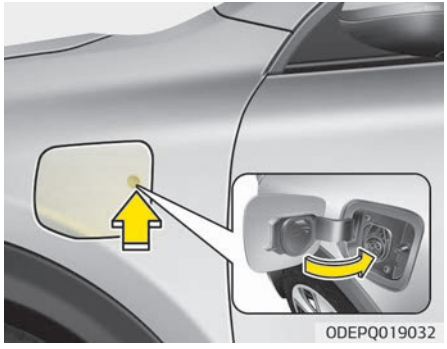

3. Make sure to securely close the charging door.

✻ NOTICE

- Do not modify or disassemble the charging cable components. It may cause a fire or an electric shock with personal injury.
- Keep the charging connector and the charging plug clean and dry. The charging cable should be also kept dry.
- Use an air gun to blow any foreign substances from the charging connector and the charging plug.

Trickle charger (Portable charging cable)

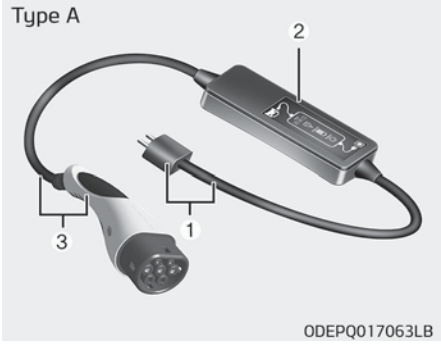

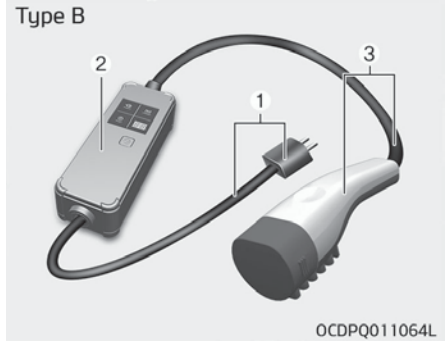

Trickle charger can be used if AC Charger is unavailable.

✻ 1. Plug and cable
2. Control box (ICCB)
3. Charging connector/cable

How to connect portable charging cable (ICCB: In-Cable Control Box) (Type A)

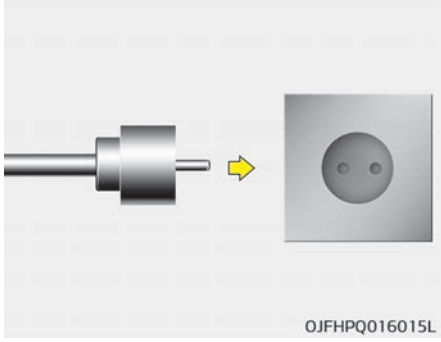

1. Turn OFF all switches, move the shift lever to P (Park), and turn OFF the vehicle.
2. Connect the plug to a household electric outlet.

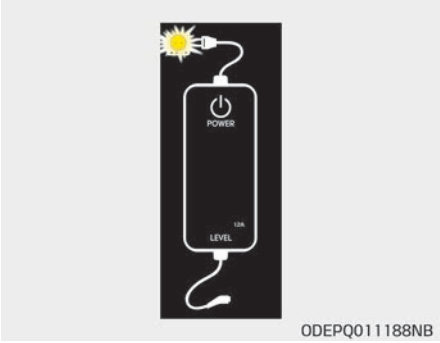

3. Make sure that the power connection indicator (green) lights in the control box.

4. Depress the brake pedal and apply the parking brake.

5. After unlocking doors, open the charging door by pressing it.
6. Open the charging door by pressing circle mark (o) area on the right edge of the charging door. If the vehicle doors are locked, the charging door will not open.

✻ NOTICE

The charging door does not open when the theft alarm system is armed.

⚠ CAUTION

If you cannot open the charging door due to freezing weather, tap lightly or remove any ice near the charging door. Do not try to forcibly open the charging door. The charging door may be broken if it is forcibly opened.

■ Vehicle connection

7. Remove any dust on the charging connector and charging inlet.

8. Hold the charging connector handle. Then, insert it into the charging inlet, until you hear a click sound. If it is not fully connected, improper connection between the charging connector and the charging terminals are a potential fire hazard.

■ Charge

ODEPQ011189NB

9. Charging starts automatically and the charging light blinks.

■ A type

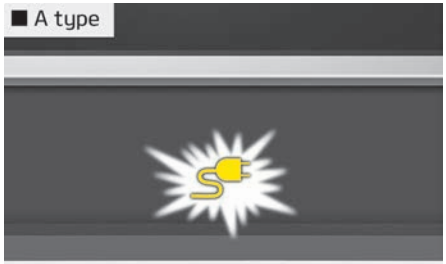

ODEPQ019027

■ B type

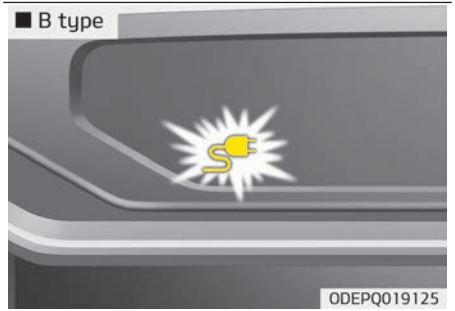

ODEPQ019125

10. Check if the charging cable connection indicator of the high voltage battery in the instrument cluster is turned ON.
Charging does not occur when the indicator is OFF. When the charging connector is not connected properly, reconnect the charging cable to charge.

✻ NOTICE

- The charging is in progress only with the shift lever is in P (Park). Charging the battery with the Engine Start/Stop button in the ACC position is possible. However, it may discharge the 12-V battery. Thus, if possible, charge the battery with the Engine Start/Stop button in the OFF position.
- Moving the shift lever from P (Park) to R (Reverse)/N (Neutral)/D (Drive) stops the charging process. To restart the charging process, move the shift lever to P (Park), press the Engine Start/Stop button to the OFF position, and disconnect the charging cable. Then, connect the charging cable and restart the vehicle again.

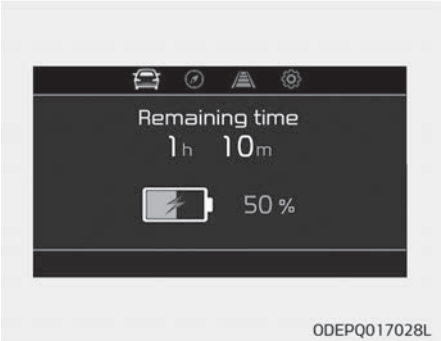

11. After charging has started, the estimated charging time is displayed on the instrument cluster for about 1 minute. It is also displayed, when the driver's door is opened with charging in progress. When scheduled charging is set, the estimated charging time is displayed as "--".

How to Connect Portable Charging Cable (ICCB: In-Cable Control Box) (Type B)

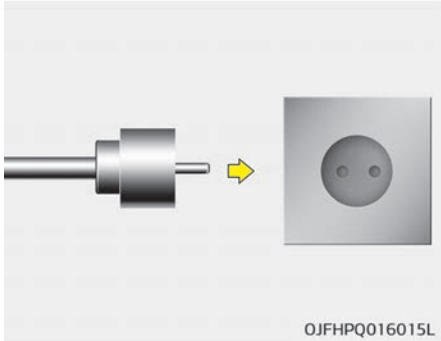

1. Turn OFF all switches, move the shift lever to P (Park), and turn OFF the vehicle.
2. Connect the plug to a household electric outlet.

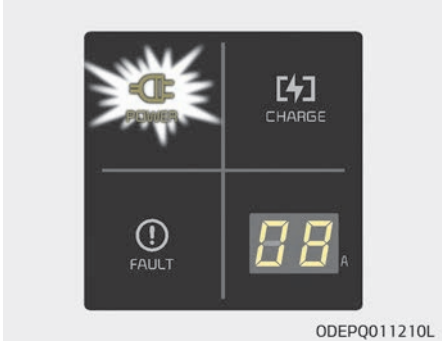

3. Check if the power lamp (green) illuminates on the control box.

4. Depress the brake pedal and apply the parking brake.

5. Open the charging door by pressing the circle mark (o) area on the right edge of the charging door. If the vehicle doors are locked, the charging door will not open.

✻ NOTICE

The charging door does not open when the theft alarm system is armed.

⚠ CAUTION

If you cannot open the charging door due to freezing weather, tap lightly or remove any ice near the charging door. Do not try to forcibly open the charging door.

6. Remove any dust on the charging connector and charging inlet.
7. Hold the charging connector handle. Then, insert it into the charging inlet, until you hear a click sound. If it is not fully connected, improper connection between the charging connector and the charging terminals are a potential fire hazard.

8. Charging starts automatically (charging lamp illuminates).

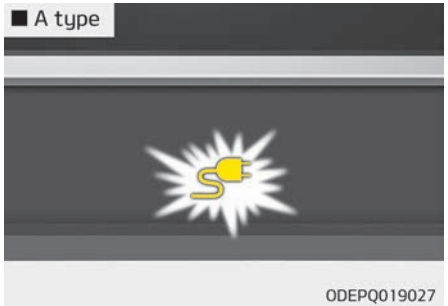

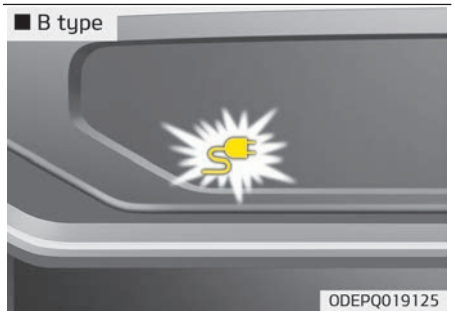

9. Check if the charging cable connection indicator of the high voltage battery in the instrument cluster is turned ON.
   Charging does not occur when the indicator is OFF. When the charging connector is not connected properly, reconnect the charging cable to charge.

✻ NOTICE

- The charging is in progress only with the shift lever is in P (Park). Charging the battery with the Engine Start/Stop button in the ACC position is possible. However, it may discharge the 12-V battery. Thus, if possible, charge the battery with the Engine Start/Stop button in the OFF position.
- Moving the shift lever from P (Park) to R (Reverse)/ N(Neutral)/D (Drive) stops the charging process. To restart the charging process, move the shift lever to P (Park), press the Engine Start/Stop button to the OFF position, and disconnect the charging cable. Then, connect the charging cable and restart the charging process.

10. After charging has started, the estimated charging time is displayed on the instrument cluster for about 1 minute. It is also displayed, when the driver's door is opened with charging in progress. When scheduled charging is set, the estimated charging time is displayed as "--".

Unlock connector in emergency

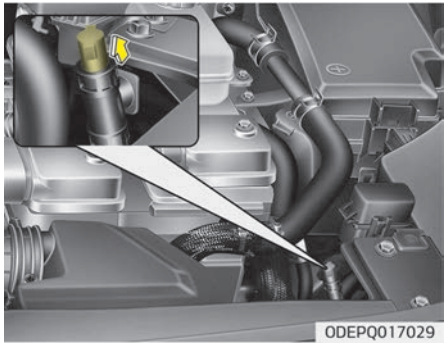

If the charging connector does not unlock for some reason, open the hood and slightly pull the emergency cable as shown above. The charging door will then open.
If a charging door is not opened immediately with emergency cable in operation, press a charging door lightly and pull emergency cable again.
The charging cable lock may not work properly when foreign materials such as dust enter the cable or the cable is encrusted with ice.

In that case, the charging cable may not be disconnected or locked, or the vehicle may not be charged. If this happens, open the hood and pull the emergency cable lightly 2 to 3 times and then try to disconnect the charging cable or start recharging.

Charge cable storage

We recommend that the trickle charger cable should be put in a storage box after use.

Charging status indicator lamp for portable charging cable (Type A)

Control Box	Indicator		Details		
	PLUG	(Green)	On: Power on Blink : Plug temperature sensor failure		
		(Red)	On: Plug high temperature protection Blink: Plug high temperature warning		
	POWER	POWER	On: Power on		
	CHARGE	CHARGE	Blink: Charging in power saving mode, only the CHARGE indicator is illuminated		
	FAULT	FAULT	Blink: Charging interrupted		
	CHARGE LEVEL	12A	Charging current 12 A	The charging current changes (3 level) whenev-er the button (1) is pressed for 1 sec with the charger plugged into an electrical outlet but not the vehicle.	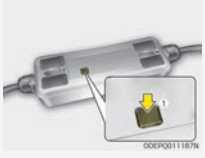
		10A	Charging current 10 A		
		8A	Charging current 8 A		

Control Box	Indicator		Details
	VEHICLE	(Green)	Charging connector plugged
		(Blue)	Charging
	VEHICLE	(Red)	Blink: Charging impossible

Charging status indicator lamp for portable charging cable (Type A)

NO	Control Box	Status / Diagnosis / Counter-measure	NO	Control Box	Status / Diagnosis / Counter-measure
1		• Charging connector plugged into vehicle (Green ON) • Plug temperature sensor failure (Green blink) • Plug high temperature protection (Red blink) • Plug high temperature warning (Red ON) Have the system inspected by a professional workshop. Kia recommends to visit an authorized Kia dealer/service partner.	2		- Charging connector plugged into vehicle (Green ON)

NO	Control Box	Status / Diagnosis / Counter-measure	NO	Control Box	Status / Diagnosis / Counter-measure
3		- While charging - Charge indicator (Green blink) - Vehicle indicator (Blue ON)	4		- Before plugging charging connector into vehicle (Red blink) - Abnormal temperature - ICCB (In-Cable Control Box) failure Have the system inspected by a professional workshop. Kia recommends to visit an authorized Kia dealer/service partner.
5		- Plugged into vehicle (Red blink) - Diagnostic device failure - Current leakage - Abnormal temperature Have the system inspected by a professional workshop. Kia recommends to visit an authorized Kia dealer/service partner.	6		- After plugging charging connector into vehicle (Red blink) - Communication failure Have the system inspected by a professional workshop. Kia recommends to visit an authorized Kia dealer/service partner.

NO	Control Box	Status / Diagnosis / Counter-measure	NO	Control Box	Status / Diagnosis / Counter-measure
7		• Plug temperature sensor failure (Green blink) • Plug high temperature protection (Red blink) • Plug high temperature warning (Red ON) Have the system inspected by a professional workshop. Kia recommends to visit an authorized Kia dealer/service partner.	8		- Power saving mode - 3 minutes after charging starts (Green blink)

Charging status indicator lamp for portable charging cable (Type B)

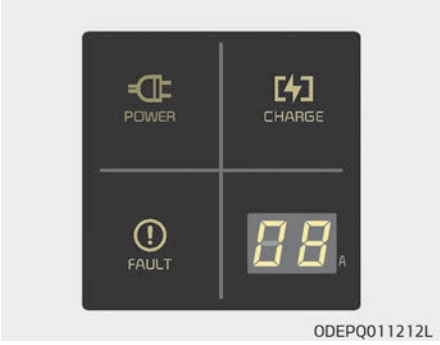

Indicator	Details
POWER	On: Power on
CHARGE	On: Charge Blink: Current limit due to high plug temperature or high internal temperature
FAULT	Blink: Charging interrupted

Indicator			Details	
CHARGE LEVEL	12	12A	The charging current changes whenever the button (1) is pressed for less than 1 sec with the charger plugged into an electrical outlet but not the vehicle.	
	10	10A		
	08	8A		
	06	6A		

Indicator	Details		
Error code	On : Error while charging/ Error during self-diagnosis		
	Error code	Item	Cause
	E1	CP communication	Vehicle communication error
	E2	Leakage	Current leakage
	E3		Charger error
	E4	Plug temperature	Plug overtemperature warning
	E5		Plug temperature failure
	E6		Charger error
	E7	Overcurrent	Charging overcurrent warning
	E8	Internal temperature	Charger overheating
	E9		Charger error
	F1	Relay fusion	Charger error
	F2	GM/I	Poor grounding of outlet
	F3	SMPS Power failure	SMPS error (voltage failure)
	F4		SMPS error (abnormal voltage)
	F5	CP voltage error	CP (-) voltage error
	F6		CP (+) voltage error
	F7	Temperature sensor error	Plug temperature sensor error
	F8		PCB internal temperature sensor error

Status/Diagnosis/Countermeasure (Type B)

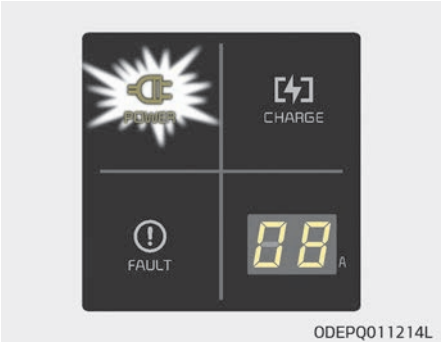

- Charging connector plugged into vehicle (POWER Green ON)
- Plug connected to an electric outlet (POWER Green ON)

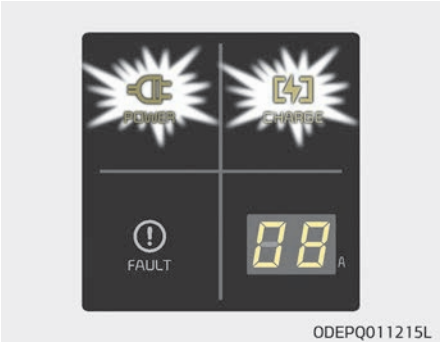

While charging

- Charge indicator (POWER Green ON/ CHARGE Blue ON)
- Charging current

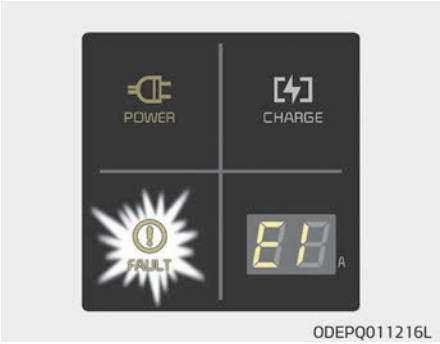

Before plugging charging connector into vehicle (POWER Green ON, FAULT Red blink)

- Abnormal temperature
- CCB (In-Cable Control Box) failure

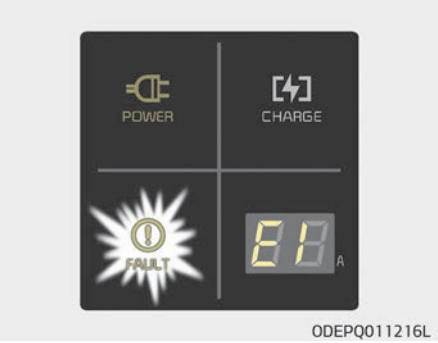

Plugged into vehicle (POWER Green ON, FAULT Red Blink)

- Diagnostic device failure
- Current leakage
- Abnormal temperature

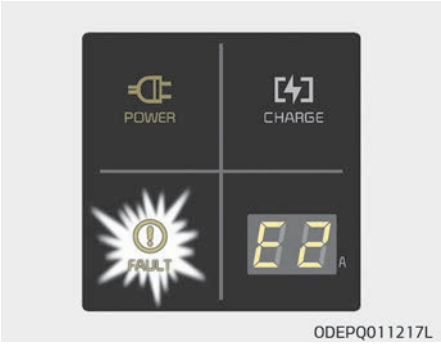

ODEPQ011217L

Leakage current failure (POWER Green ON, FAULT Red Blink)

- After disconnecting and reconnecting the power plug, press and release the button for 2 seconds or longer to clear the error.

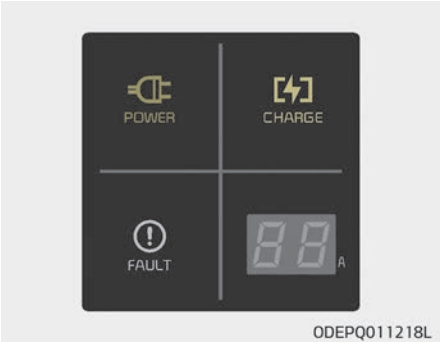

ODEPQ011218L

Power saving mode

- Charge level indicator is turned off if there is no status change for more than 1 minute.

How to disconnect portable charging cable (ICCB: In-Cable Control Box)

1. Before disconnecting the charging connector, make sure the doors are unlocked. When the door is locked, the charging connector lock system will not allow disconnection. To prevent charging cable theft, the charging connector cannot be disconnected from the inlet when the doors are locked. Unlock all doors to disconnect the charging connector from the inlet. However, if the vehicle is in the charging connector AUTO mode, the charging connector automatically unlocks from the inlet when charging is completed. For more details, refer to "Charging connector AUTO/LOCK mode" on page 1-07 in this chapter.

✻ NOTICE

In order to disconnect the charging connector, unlock the doors to unlatch the charging connector lock system. If not, the charging connector and the vehicle's charging inlet may be damaged.

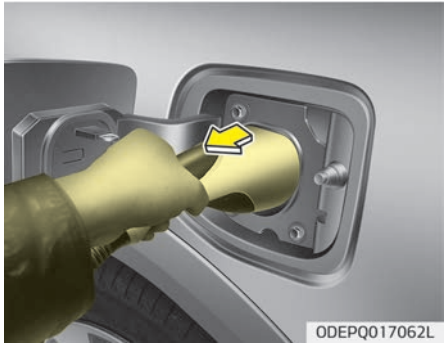
ODEPQ017062L

2. Hold the charging connector handle and pull it out.
3. Make sure to securely close the charging door.

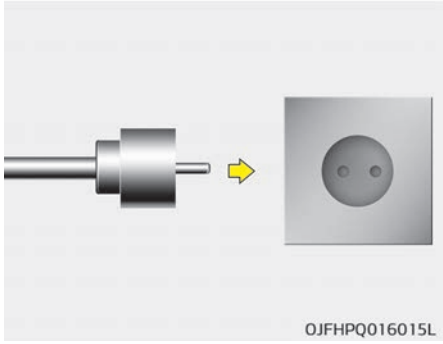

4. Disconnect the plug from the household electric outlet. Do not pull the cable when disconnecting the plug.
5. Close the protective cover for the charging connector so that foreign material cannot get into the terminal.
6. Put the charging cable inside the cable compartment to protect it.

Precautions for portable charging cable (ICCB: In-Cable Control Box)

- Use the portable charging cable that is certified by Kia.
- Do not try to repair, disassemble, or adjust the portable charging cable.
- Do not use an extension cord or adapter.
- Stop using immediately if failure warning light occurs.
- Do not touch the plug and charging connector with wet hands.
- Do not touch the terminal part of the AC charging connector and the AC charging inlet on the vehicle.
- Do not connect the charging connector to voltage that does not comply with regulations.
- Do not use the portable charging cable if it is worn out, exposed, or there exists any type of damage on the portable charging cable.
- If the ICCB case and AC charging connector is damaged, cracked, or the wires are exposed in any way, do not use the portable charging cable.
- Do not let children operate or touch the portable charging cable.
- Keep the control box free of water.
- Keep the AC charging connector or plug terminal free of foreign substances.
- Do not step on the cable or cord. Do not pull the cable or cord and do not twist or bend it.
- Do not charge when there is lightning.
- Do not drop the control box or place a heavy object on the control box.
- Do not place an object that can generate high temperatures near the charger when charging.
- Charging with the worn out or damaged household electric outlet can result in a risk of electric shock. If you are in doubt to the household electric outlet condition, have it checked by a licensed electrician.
- Stop using the portable charging cable immediately if the household electric outlet or any components is overheated or you notice burnt odors.

DRIVING THE HYBRID/PLUG-IN HYBRID VEHICLE

Changing plug-in hybrid mode (Plug-in hybrid vehicle)

ODEP059110N

■ EV/HEV Button
Whenever you press the [EV/HEV] button, Plug-in hybrid system drive mode will be changed in sequential as: Electric (CD) mode - Automatic (AUTO) mode - Hybrid (CS) mode.
Each time the mode is changed a corresponding LED is displayed on the instrument cluster as follows.

Automatic (AUTO) Mode

ODEP059301

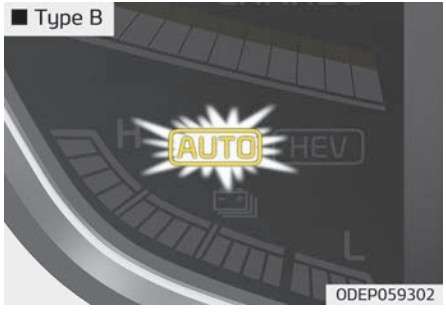

ODEP059302

Hybrid (CS) mode

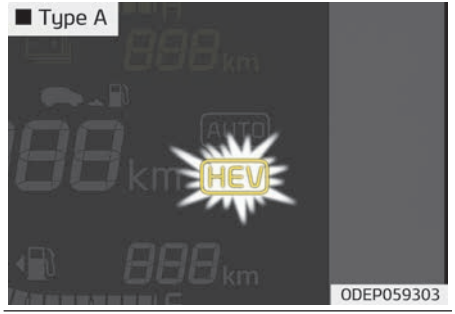

ODEP059303

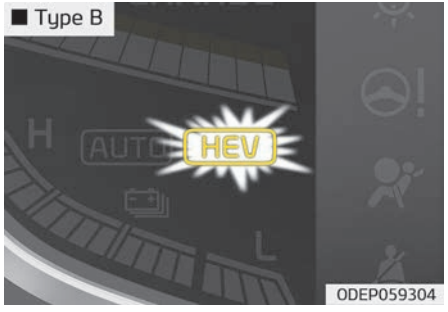

ODEP059304

Plug-in hybrid mode message

- CD (Charge Depleting, Electric) mode

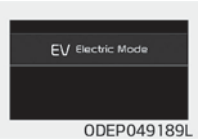

ODEP049189L

: The high-voltage (hybrid) battery is used to drive the vehicle.

• AUTO (Automatic) mode

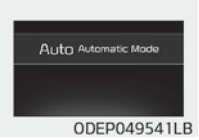

ODEP049541LB

: The drive mode will be automatically selected from either Electric (CD) mode or Hybrid (CS) mode by the system according to the driving condition.

• CS (Charge Sustaining, Hybrid) mode

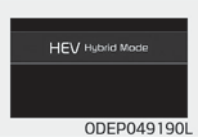

ODEP049190L

: The high-voltage (hybrid) battery and gasoline engine is used to drive the vehicle.

A corresponding message is displayed to indicate the selected mode.

ODEPQ019129C

ODEPQ019128C

■ 'Infotainment System' screen

Press [PHEV] on the [Home screen]. The Plug-in Hybrid menu consists of five sections: [EV range], [Energy information], [Charge management], [ECO driving], [Energy flow].
For more information, please refer to the Multimedia System Manual that was separately supplied with your vehicle.

Warning and indicator lights

Ready indicator

This indicator illuminates:

When the vehicle is ready to be driven.

- ON: Normal driving is possible.
- OFF: Normal driving is not possible, or a problem has occurred.
- Blinking: Emergency driving.

When the ready indicator goes OFF or blinks, there is a problem with the system. In this case, have the vehicle inspected by a professional workshop. Kia recommends to visit an authorized Kia dealer/service partner.

Hybrid system warning light

This warning light illuminates:

When there is a malfunction with the hybrid system.
In this case, have the vehicle inspected by a professional workshop. Kia recommends to visit an authorized Kia dealer/service partner.
When the warning light illuminate while driving, or does not go OFF after starting the vehicle, have the system inspected by a professional workshop. Kia recommends to visit an authorized Kia dealer/service partner.

EV mode indicator

This indicator illuminates when the vehicle is driven by the electric motor.

Charging cable connection indicator (Plug-in hybrid vehicle)

This indicator illuminates in red when the charging cable is connected.

Coasting guide (if equipped)

A chime will sound and the coasting guide indicator will blink four times to inform the driver when to take the foot off from the accelerator by anticipating a decelerating event* based on the analysis of driving routes and road conditions of the navigation. It encourages the driver to remove foot from the pedal and allow coasting down the road with EV motor only. This helps prevent unnecessary fuel consumption and increases fuel efficiency.

❈ Example of a deceleration event is going down an extended hill, slowing down approaching a toll booth, and approaching reduced speed zones.

- User settings
  Press the Engine Start/Stop button and put the shift lever in P (Park). In the User Settings Mode, select Driving Assist, Coasting Guide, and then On to turn on the system. Cancel the selection of coasting guide to turn off the system. For the explanation of the system, press and hold the [OK] button.

- Operation conditions
  To activate the system, take the following procedures. Enter your destination information on the navigation and select the driving route. Then, satisfy the following.
  - The driving speed should be between 60 km/h (37 mph) and 160 km/h (99 mph).

❈ The operating speed may vary due to difference between instrument cluster and navigation effected by tire inflation level.

❈ NOTICE

Coasting guide is only a supplemental system to assist with fuel-efficient driving. Thus, the operating conditions may be different in accordance with traffic/road conditions (i.e. driving in a traffic jam, driving on a slope, driving on a curve). Thus, take the actual driving conditions into consideration, such as distances from the vehicles ahead/ behind, while referring to the coasting guide system as guidance.

Check hybrid system

This message is displayed when there is a problem with the hybrid control system.

Refrain from driving when the warning message is displayed.
In this case, have the system serviced by a professional workshop. Kia recommends to visit an authorized Kia dealer/service partner.

Check hybrid system. Turn off engine

This message is displayed when there is a problem with the hybrid system. The " " indicator will blink and a warning chime will sound until the problem is solved.
In this case, have the system serviced by a professional workshop. Kia recommends to visit an authorized Kia dealer/service partner.

Check hybrid system. Do not start engine

This message is displayed when the hybrid battery power (SOC) level is low. A warning chime will sound until the problem is solved.
In this case, have the system serviced by a professional workshop. Kia recommends to visit an authorized Kia dealer/service partner.

Stop vehicle and check power supply

This message is displayed when a failure occurs in the power supply system.
In this case, park the vehicle in a safe location and we recommend that you tow your vehicle to the nearest authorized Kia dealer and have the vehicle inspected.

Refill inverter coolant

This message is displayed when the inverter coolant is nearly empty.
You should refill the inverter coolant.

Stop vehicle and check brakes

This message is displayed when a failure occurs in the brake system.
In this case, park the vehicle in a safe location and we recommend that you tow your vehicle to the nearest authorized Kia dealer and have the vehicle inspected.

Check brakes

This message is displayed when the brake performance is low or the regenerative brake does not work properly due to a failure in the brake system.
In this case, it may take longer for the brake pedal to operate and the braking distance may become longer.

Refuel to prevent hybrid battery damage

This message is displayed when the fuel tank is nearly empty.
You should refill the fuel tank to prevent hybrid battery damage.

Check virtual engine sound system

This message is displayed when there is a problem with the Virtual Engine Sound System (VESS).
In this case, have the system serviced by a professional workshop. Kia recommends to visit an authorized Kia dealer/service partner.

Remaining charge time (Plug-in hybrid vehicle)

The message is displayed to notify the remaining time to fully charge the battery.

Charging stopped. Please check the AC charger (Plug-in hybrid vehicle)

This message is displayed when there is a problem with the charger.

Low/High system temp. Maintaining hybrid mode (Plug-in hybrid vehicle)

This message is displayed when the temperature of the high-voltage (hybrid) battery is too low or too high.
This warning message is to protect the battery and the hybrid system.

Low/High system temp. Switching to hybrid mode (Plug-in hybrid vehicle)

This message is displayed when the temperature of the high-voltage (hybrid) battery is too low or high. This warning message is to protect the battery and the hybrid system.

Switching to hybrid mode to allow heating (Plug-in hybrid vehicle)

- When the outdoor temperature is lower than -13 °C (8.6 °F), and you turn the climate control On for heating, the above message will be displayed in the cluster. Then, the vehicle will automatically switch to HEV mode.
- When the outdoor temperature is higher than -10 °C (14 °F), or you turn the climate control Off, the vehicle will automatically return to EV mode.

Wait until fuel door opens (Plug-in hybrid vehicle)

The message is displayed when you attempt to open the fuel filler door with the fuel tank pressurized. Wait until the fuel tank is depressurized.

✻ NOTICE

- It may take up to 20 seconds to open fuel filler door.
- When the fuel filler door is frozen and does not open after 20 seconds at freezing temperature, slightly tap the fuel filler door and then attempt to open it.

Fuel door open (Plug-in hybrid vehicle)

This message is displayed when the fuel filler door is opened.
Also means "Ready to refuel".

Check fuel door (Plug-in hybrid vehicle)

This message is displayed when the fuel filler door is open or an abnormality has occurred.

Charging door open (Plug-in hybrid vehicle)

This message indicates that the charging door is open while in driving ready state to encourage you to inspect and close the door.
(Driving with the charging door open may result in moisture inflow or damage. This message is used to prevent such occurrences.)

Unplug vehicle to start (Plug-in hybrid vehicle)

The message is displayed when you start the engine without unplugging the charging cable. Unplug the charging cable, and then start the vehicle.

Maintaining hybrid mode to continue heating (Plug-in hybrid vehicle)

A message is displayed when heating is in operation and the HEV mode is maintained to meet the heating operating conditions when attempting to switch to EV mode by pressing the EV/HEV button.

EV/HEV modes (Plug-in hybrid vehicle)

A corresponding message is displayed when a mode is selected by pressing the EV/HEV button.

NIRO HYBRID ENERGY FLOW

Kia hybrid system notifies the drivers of energy flow in various operating modes. Eleven modes show drivers the current operating condition.

Vehicle stop

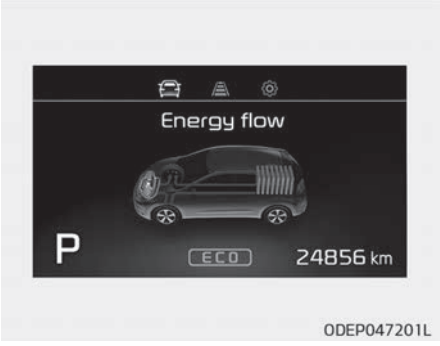

ODEP047201L

The mode means the vehicle at stop.
(There is no energy flow.)

EV propulsion

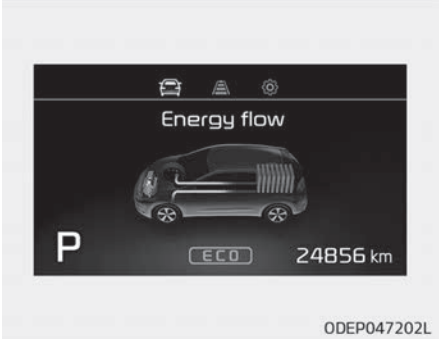

ODEP047202L

Electric power is used to move the vehicle.
(Battery ➡ Wheel)

Power assist

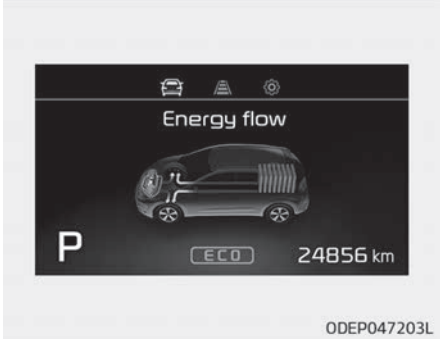

ODEP047203L

Electric and engine power are used to move the vehicle.
(Battery & Engine ➡ Wheel)

Engine only propulsion

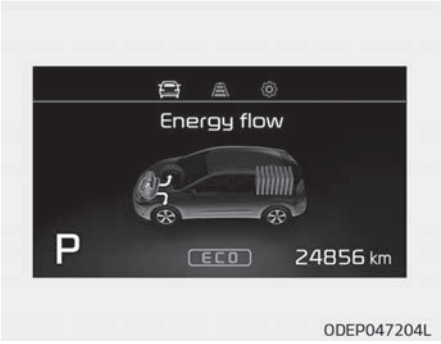

Engine power is used to move the vehicle.
(Engine ➡ Wheel)

Engine generation

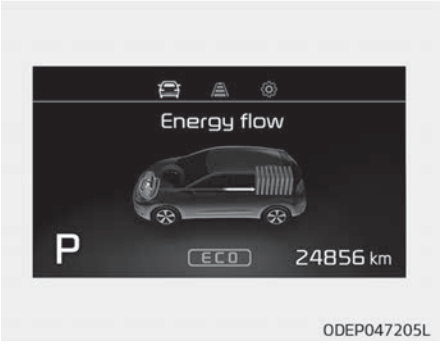

Vehicle is stopped with the engine charging the hybrid battery.
(Engine ➡ Battery)

Regeneration

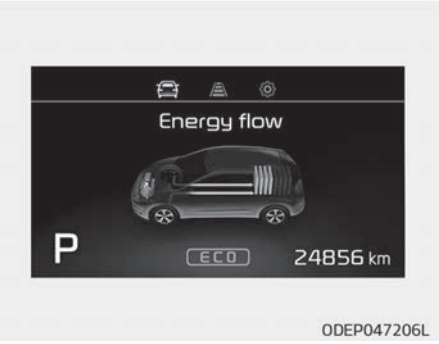

Hybrid battery is being charged by regenerative braking.
(Wheel ➡ Battery)

Engine brake

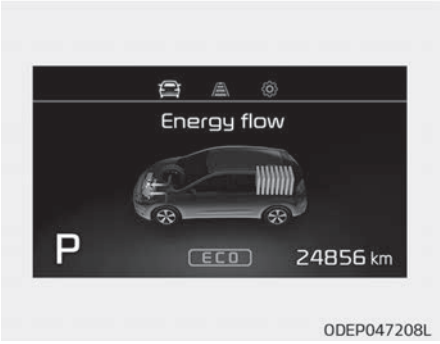

The vehicle is being slowed down by engine compression.
(Wheel ➡ Engine)

Power reserve

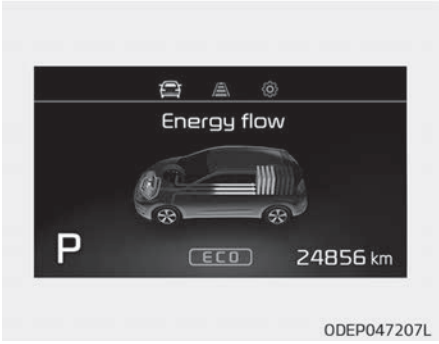

Engine is both driving the vehicle and charging the hybrid battery.
(Engine ➡ Wheel & Battery)

Engine generation/motor drive

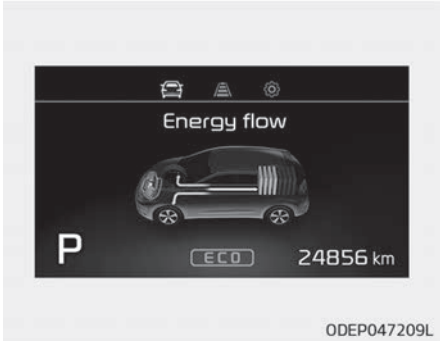

The vehicle is being slowed down by engine compression and regenerative braking. The hybrid battery is being charged by regenerative braking.
(Engine ➡ Battery ➡ Wheel)

Engine generation/regeneration

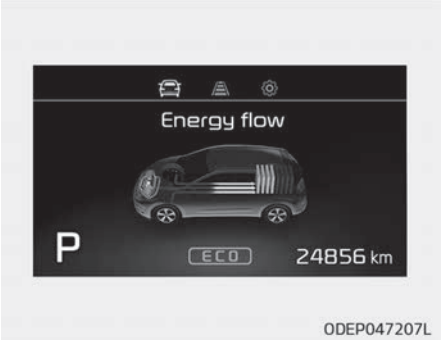

The engine and regenerative braking system charge the hybrid battery driving deceleration.
(Engine & Wheel ➡ Battery)

Engine brake/regeneration

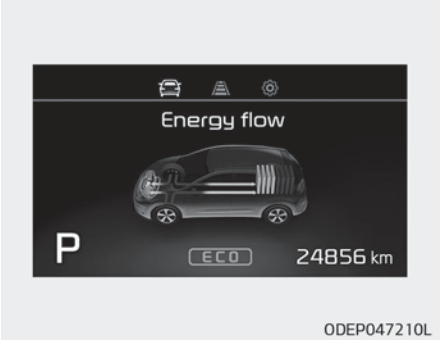

The engine compression can be used to slow down the vehicle. The regenerative braking system can be used to charge the hybrid system.
(Wheel ➡ Engine & Battery)

Aux. Battery Saver+ (For plug-in hybrid, if equipped)

The Aux. Battery Saver+ is a function that monitors the charging status of the 12V auxiliary battery.
If the auxiliary battery level is low, the main high voltage battery charges the auxiliary battery.

✻ NOTICE

The Aux. Battery Saver+ function will be ON when the vehicle is delivered. If the function is not needed, you may turn it off in the Users Settings mode on the LCD display. For more information, refer to the "System setting" on page 1-43.

Mode

• Cycle Mode:

When the vehicle is OFF with all doors, hood and trunk (tailgate) closed, the Aux. Battery Saver+ periodically activates according to the auxiliary battery status.

• Automatic Mode:

When the engine start/stop button is in the ON position with the charging connector plugged in, the function activates according to the auxiliary battery status to prevent over-discharge of the auxiliary battery.

⚠ CAUTION

- **The Aux. Battery Saver+ activates maximum of 20 minutes. If the Aux. Battery Saver+ function activates more than 10 times consecutively, in the Automatic Mode the function will stop activating, judging that there is a problem with the auxiliary battery. In this case, drive the vehicle for some period of time. The function will start activating if the auxiliary battery returns to normal.**
- **The Aux. Battery Saver+ function cannot prevent battery discharge of the auxiliary battery is damaged, worn out, used as a power supply or unauthorized electronic devices are used.**

System setting

The driver can activate the Aux. Battery Saver+ function by placing the engine start/stop button to the ON position and by selecting:
"User Settings ➡ Other Features ➡ Aux. Battery Saver+"

⚠ WARNING

When the function is activating the indicator lamp will illuminate and 360V high voltage electricity will be flowing in the vehicle.
Do not touch, separate or disassemble all the electric and electronic components and devices including the high voltage electric wire, connector. This may cause electric shock and lead to fatal injuries.
Also, do not modify your vehicle in any way. This may affect your vehicle performance and lead to an accident.

STARTING THE HYBRID/PLUG-IN HYBRID VEHICLE (SMART KEY)

Starting the hybrid system

1. Carry the smart key into the vehicle.
2. Make sure the parking brake is firmly applied.
3. Place the shift lever in the P(Park) position.
   In N (neutral) position, you can not start the vehicle.
4. Depress the brake pedal.
5. Press the engine start/stop button.
6. The engine should be started without pressing the accelerator. In extremely cold weather or after the vehicle has not been operated for several days, let the engine warm up without depressing the accelerator.

- Even if the smart key is in the vehicle, if it is far away from you, the engine may not start.
- When the engine start/stop button is in the ACC or ON position, if any door is open, the system checks for the smart key. If the smart key is not in the vehicle, the warning, "Key is not in vehicle" will come on, and if all doors are closed, the chime will also sound for about 5 seconds. The indicator will turn off while the vehicle is moving. Keep the smart key in the vehicle when using the ACC position or if the vehicle engine is on.

If the starting procedure is followed, the " " symbol on the instrument cluster will turn on. For more details, please refer to "Ready indicator" on page 5-94.

Economical and safe operation of hybrid system

- Drive smoothly. Accelerate at a moderate rate and maintain a steady cruising speed. Don't make "jack-rabbit" starts. Don't race between stoplights.
  Avoid heavy traffic whenever possible. Always maintain a safe distance from other vehicles so you can avoid unnecessary braking. This also reduces brake wear.
- The regenerative brake generates energy when the vehicle decelerates.
- When the hybrid battery power is low, the hybrid system automatically recharges the hybrid battery.
- When the engine runs in "N" position, the hybrid system cannot generate electricity. The hybrid battery cannot recharge in "N" position. Please refer to "Dual clutch transmission operation" on page 6-16.

✻ NOTICE

When the hybrid system is in READY mode, the engine will automatically start and stop as needed. The " " symbol will illuminate in the cluster when the system is operational.

COMPONENTS OF THE HYBRID/PLUG-IN HYBRID VEHICLE

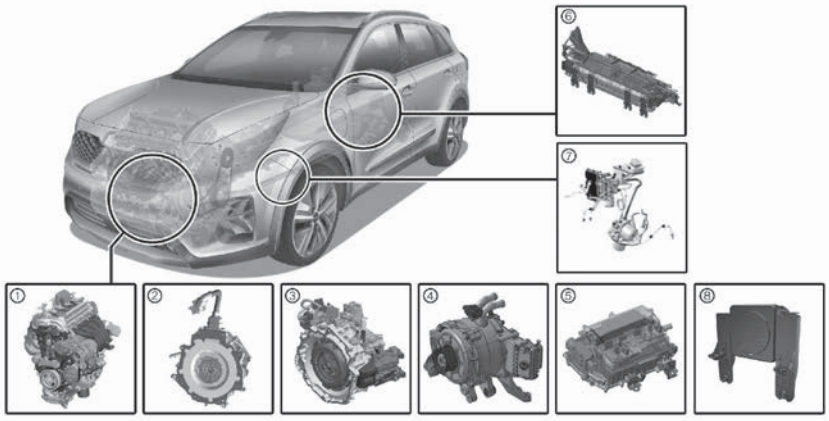

1. Engine: 1.6L
2. Motor: 32kW
3. Transmission: 6DCT
4. Hybrid starter generator (HSG)
5. HPCU (Hybrid Power Control Unit)
6. High voltage battery system
7. Generative brake system
8. Virtual Engine Sound System (VESS)

❋ The actual shape may differ from the illustration.

ODEPQ011001L

The Hybrid battery uses high voltage top operate the electric motor and other components and other components. High voltage is dangerous if touched.
Your vehicle is equipped with orange colored insulation and covers over the high voltage components to protect people from electric shock. High voltage warning labels are attached to some system components as additional warnings. Have your vehicle serviced by a professional workshop. Kia recommends to visit an authorized Kia dealer/service partner.

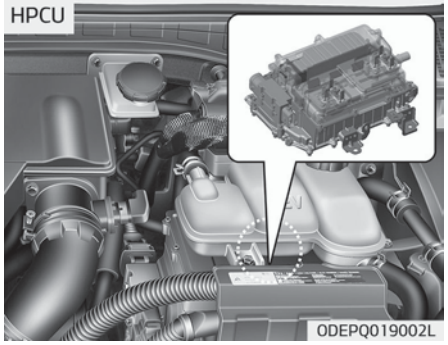

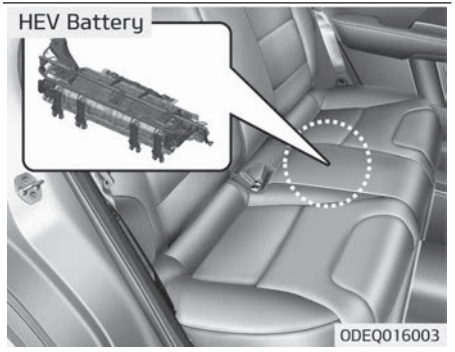

⚠ WARNING

Never touch orange or high voltage labeled components including wires, cables, and connections. If the insulators or covers are damaged or removed, severe injury or death from electrocution may occur.

⚠ WARNING

When replacing the fuses in the engine compartment, never touch the HPCU. The HPCU carries high voltage. Touching the HPCU could result in electrocution, serious injury, or death.

⚠ CAUTION

- **Do not pile up any items in an area behind the high voltage battery. In a crash, the battery may become unstable, or its performance may degrade.**

(Continued)

(Continued)

- **Do not apply strong force nor pile up any items above the trunk/tailgate. Such an attempt may distort the high voltage battery case, causing a safety problem or degrading the performance.**
- **Be careful when loading inflammable liquid in trunk/tailgate. It could cause operational and safety degradation if the liquid leaks and flows in high voltage battery.**

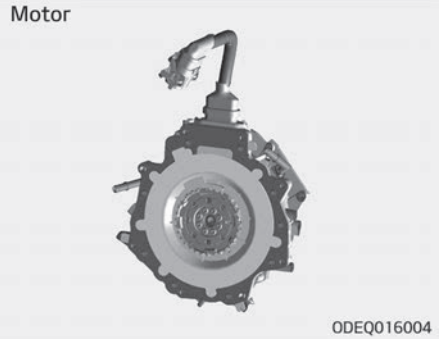

⚠ WARNING

As with all batteries, avoid fluid contact with the Hybrid battery. If the battery is damaged and if electrolyte comes in contact with your body, clothes or eyes, immediately flush with a large quantity of fresh water.

⚠ WARNING

Do not use an after-market battery charger to charge the Hybrid battery. Doing so may result in death or serious injury.

⚠ WARNING

■ High Waters

- Avoid high waters as this may result in your vehicle becoming saturated with water and could compromise the high voltage components.

(Continued)

(Continued)

- Do not touch the any of the high voltage components within your vehicle if your vehicle has been submerged in water equal to half of the vehicle height. Touching high voltage components once submerged in water could result in severe burns or electric shock that could result in death or serious injury.

⚠ WARNING

■ Carrying liquids in trunk/tailgate

Do not load large amounts of water in open containers into the vehicle. If the water spills onto the HEV battery, it may cause a short and damage the battery.

⚠ CAUTION

■ Cleaning engine

(Continued)

(Continued)

When you clean the engine compartment, do not wash using water. Water may cause electric arcing to occur and damage electronic parts and components.

⚠ WARNING

■ Exposure to high voltage

- High voltage in the hybrid battery system is very dangerous and can cause severe burns and electric shock. This may result in serious injury or death.
- For your safety, never touch, replace, dismantle or remove any portion of the hybrid battery system including components, cables and connectors.

⚠ WARNING

■ Use of water or liquids

(Continued)

(Continued)

If water or liquids come into contact with the hybrid system components, and you are also in contact with the water, severe injury or death due to electrocution may occur.

⚠ WARNING

■ Hot components

When the hybrid battery system operates, the HEV battery system can be hot. Heat burns may result from touching even insulated components of the HEV system.

⚠ CAUTION

■ Prolonged parking

Prolonged parking might cause battery discharge and operation failure due to natural discharge. Driving the vehicle approximately once every 2 months, more than 15 km is recommended. The battery will be charged automatically when driving the vehicle.

Safety plug

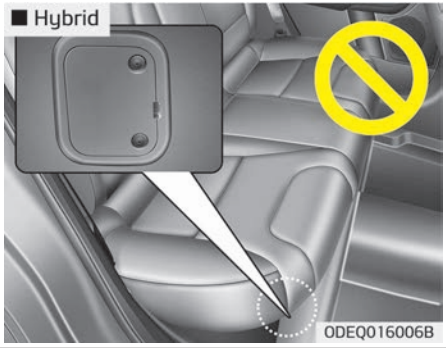

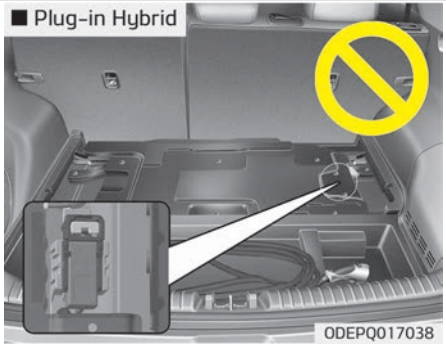

⚠ DANGER

Never touch the safety plug. Safety plug is attached to high voltage hybrid battery system. Touching safety plug will result in death or serious injury. Service personnel should follow procedure in service manual.

Some special features of the hybrid vehicle

Hybrid vehicles sound different than gasoline engine vehicles. When the hybrid system operates, you may hear a sound from the hybrid battery system behind the rear seat. If you apply the accelerator pedal rapidly, you may hear a sound. When you apply the brake pedal, you may hear a sound from the regenerative brake system. When the hybrid system is turned off or on, you may hear a sound in the engine compartment. If you depress the brake pedal repeatedly when the hybrid system is turned on, you may hear a sound in the engine compartment. None of these sounds indicate a problem.

They are characteristics of hybrid vehicles.

When the hybrid system is turned on, the engine may run. This does not indicate a malfunction. If the " " symbol is on, the hybrid system is operating. Even if the gasoline engine is off, you can operate the vehicle.
The HEV system may emit electromagnetic waves which can affect the performance of electronic devices appliances, such as laptop computers, which are not part of the vehicle design.
If you park the vehicle for a long time, the hybrid system will discharge. You need to drive the vehicle several times per month to maintain a charge.
When you start the hybrid system in the "P" transmission position, the " " symbol is illuminated in the cluster. The driver can drive the vehicle even if the engine is stopped.

⚠ WARNING

When you leave the vehicle, you should turn off the hybrid system. If you depress the accelerator pedal by mistake and the vehicle is not in the "P" position, the vehicle will accelerate. This may result in serious injury or death.

Virtual Engine Sound System (VESS)

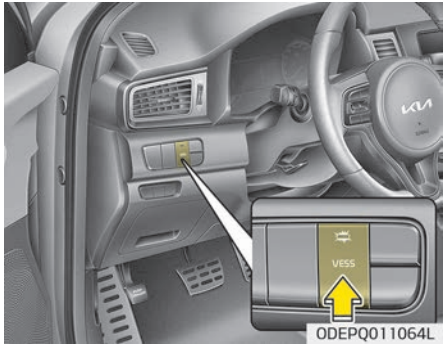

The Virtual Engine Sound System generates engine sound for pedestrians to hear vehicle sound because there is limited sound while motor power is used.

- The VESS may be turned ON or OFF by pressing the VESS button. (if equipped)
- With the ENGINE START/STOP button in the ON position, if you change the shift lever from P(Parking) to any other position, the VESS will operate.
- When the gear is shifted to R (Reverse), an additional warning sound will be heard.

High voltage battery air intake

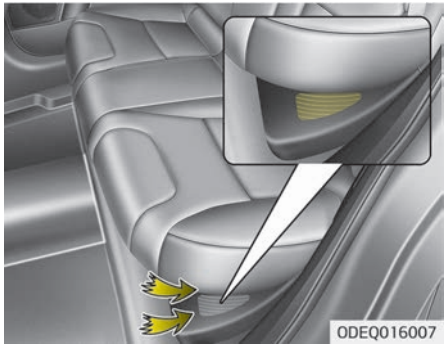

The hybrid battery air intake is located on bottom the rear seats. The air intake cools down the hybrid battery. When the hybrid battery air intake is blocked, the hybrid battery may be overheated. Do not obstruct the air intake with any other objects.

⚠ WARNING

■ Air Intake

- **Blocking the air intake behind the rear seats may damage the HEV battery.**
- **Do not allow any water into the air intake even when cleaning. If any water enters the air intake, the Hybrid battery may cause an electric shock which can cause serious injury or death due to electrocution.**

If an accident occurs

- Avoid the engine compartment.
- Avoid any orange or high voltage wires, cables, or components.
- Assume that a high voltage component is exposed and move away from the vehicle as promptly as possible.
- Refer to "Towing" on page 7-34 for towing information.

⚠ WARNING

- **After parking the vehicle, shift the transmission into "P" position. Turn off the hybrid system by pushing the Engine Start/Stop button.**
- **For your safety, do not touch high voltage cables, connectors and package modules. High Voltage components are orange in color.**
- **Exposed cables or wires may be visible inside or outside of the vehicle. Never touch the wires or cables, because an electrical shock may occur causing injury or death.**

(Continued)

(Continued)

- **If a small scale fire occurs, use a fire extinguisher (ABC, BC) that is meant for electrical fires.**
  If it is impossible to extinguish the fire in the early stage, remain a safe distance from the vehicle and immediately call your local fire emergency responders. Also, advise them that a hybrid vehicle is involved.
  If the fire spreads to the high voltage battery, large amount of water is needed to put out the fire.
  Using small amount of water or fire extinguishers not meant for electrical fires could cause serious injury or death from electrical shocks.
- **If you need towing, refer to "Towing" on page 7-34.**

⚠ WARNING

If a vehicle accident occurs:

(Continued)

(Continued)

1. **Stop the vehicle and shift the transmission into "P" position. And then depress the parking brake.**
2. **Turn off the Hybrid system by pushing the Engine Start/Stop Button.**
3. **Evacuate to the safety place.**
4. **Call emergency services for help and let them know the vehicle is a Hybrid vehicle.**

Do not touch high voltage cables, connectors and package modules. High voltage components are orange in color.
Exposed cables or wires may be visible inside or outside of the vehicle. Never touch the wires or cables, because an electrical shock may occur causing injury or death.

⚠ WARNING

If a submersion in water occurs:
(Continued)

(Continued)

If your vehicle was flooded and has soaked carpeting or water on the flooring, you should not try to start the Hybrid system. Never touch the high voltage cables, connectors and package modules, because an electrical shock may occur causing injury or death. High Voltage cables are orange in color.
In this case, have the vehicle towed to a professional workshop and inspected. Kia recommends to visit an authorized Kia dealer/service partner.

When the hybrid vehicle shuts off

When the high voltage battery or 12-volt battery discharges, or fuel tank is empty, the hybrid system may not operate.
If the Hybrid system stops operating while the vehicle is moving, reduce the vehicle speed gradually. Pull your vehicle off the road in a safe area, and shift the transmission in to Park (P) position and;

1. Turn on the hazard warning flashers.
2. Set the start button at OFF, and try to start the Hybrid system by applying the brake pedal and pushing the start button.
3. If the Hybrid system will not operate, refer to "Emergency starting" on page 7-05.

Before you try to jump start the vehicle, confirm the fuel level. If the fuel level is low add more fuel before attempting as emergency start.

⚠ WARNING

■ Accident vehicle

Never touch electric wires or cable. If exposed electric wires or cables are visible inside or outside of your vehicle, an electric shock may occur.

⚠ WARNING

■ Putting out fire

Never use a small quantity of water to put out a fire in your vehicle. If a
(Continued)

(Continued)

fire occurs, evacuate the car immediately and contact the fire department.

Introduction

How to use this manual..... 2-02
Fuel requirements.....2-03
Gasoline engine..... 2-03
Vehicle handling instructions.....2-06
Vehicle modifications.....2-07
Vehicle break-in process.....2-08
HEV/PHEV powertrain.....2-09

HOW TO USE THIS MANUAL

We want to help you get the greatest possible driving pleasure from your vehicle. Your Owner's Manual can assist you in many ways. We strongly recommend that you read the entire manual. In order to minimize the chance of death or injury, you must read the WARNING and CAUTION sections in the manual.

Illustrations complement the words in this manual to best explain how to enjoy your vehicle. By reading your manual, you learn about features, important safety information, and driving tips under various road conditions.

The general layout of the manual is provided in the Table of Contents. Use the index when looking for a specific area or subject; it has an alphabetical listing of all information in your manual.

Chapters: This manual has ten chapters plus an index. Each chapter begins with a brief list of contents so you can tell at a glance if that chapter has the information you want.

You will find various WARNINGs, CAUTIONs, and NOTICEs in this manual. These WARNINGs were prepared to enhance your personal safety. You should carefully read and follow ALL procedures and recommendations provided in these WARNINGs, CAUTIONs and NOTICEs.

⚠ WARNING

A WARNING indicates a situation in which harm, serious bodily injury or death could result if the warning is ignored.

⚠ CAUTION

A CAUTION indicates a situation in which damage to your vehicle could result if the caution is ignored.

✻ NOTICE

A NOTICE indicates interesting or helpful information is being provided.

FUEL REQUIREMENTS

Gasoline engine

Unleaded

For Europe

For the optimal vehicle performance, we recommend you to use unleaded gasoline with an octane rating of RON (Research Octane Number) 95 / AKI (Antiknock Index) 91 or higher.
You may use unleaded gasoline with an octane rating of RON 91~94 / AKI 87~90 but it may result in slight performance reduction of the vehicle. (Do not use methanol blended fuels.)

Except Europe

Your new Kia vehicle is designed to use only unleaded fuel having an Octane Rating of RON (Research Octane Number) 91 / AKI (Antiknock Index) 87 or higher. (Do not use methanol blended fuels.)
Your new vehicle is designed to obtain maximum performance with UNLEADED FUEL, as well as minimize exhaust emissions and spark plug fouling.

⚠ CAUTION

NEVER USE LEADED FUEL. The use of leaded fuel is detrimental to the catalytic converter and will damage the engine control system's oxygen sensor and affect emission control.
Never add any fuel system cleaning agents to the fuel tank other than what has been specified. (Kia recommends to consult an authorized Kia dealer/service partner for details.)

⚠ WARNING

- **Do not "top off" after the nozzle automatically shuts off when refueling.**
- **Always check that the fuel cap is installed securely to prevent fuel spillage in the event of an accident.**

Leaded (if equipped)

For some countries, your vehicle is designed to use leaded gasoline. When you are going to use leaded gasoline, Kia recommends to visit an authorized Kia dealer/service partner and ask whether leaded gasoline in your vehicle is available or not.
Octane Rating of leaded gasoline is same with unleaded one.

Gasoline containing alcohol and methanol

Gasohol, a mixture of gasoline and ethanol (also known as grain alcohol), and gasoline or gasohol containing methanol (also known as wood alcohol) are being marketed along with or instead of leaded or unleaded gasoline.
Do not use gasohol containing more than 10% ethanol, and do not use gasoline or gasohol containing any methanol. Either of these fuels may cause drivability problems and damage to the fuel system, engine control system and emission control system.
Discontinue using gasohol of any kind if drivability problems occur.
Vehicle damage or drivability problems may not be covered by the manufacturer's warranty if they result from the use of:

1. Gasohol containing more than 10% ethanol.
2. Gasoline or gasohol containing methanol.
3. Leaded fuel or leaded gasohol.

⚠ CAUTION

Never use gasohol which contains methanol. Discontinue use of any gasohol product which impairs drivability.

Other fuels

Using fuels such as
- Silicone (Si) contained fuel,
- MMT (Manganese, Mn) contained fuel,
- Ferrocene (Fe) contained fuel, and
- Other metallic additives contained fuels, may cause vehicle and engine damage or cause plugging, misfiring, poor acceleration, engine stalling, catalyst melting, abnormal corrosion, life cycle reduction, etc.
  Also, the Malfunction Indicator Lamp (MIL) may illuminate.

✻ NOTICE

Damage to the fuel system or performance problem caused by the use of these fuels may not be covered by your New Vehicle Limited Warranty.

Use of MTBE

Kia recommends avoiding fuels containing MTBE (Methyl Tertiary Butyl Ether) over 15.0% vol. (Oxygen Content 2.7% weight) in your vehicle.
Fuel containing MTBE over 15.0% vol. (Oxygen Content 2.7% weight) may reduce vehicle performance and produce vapor lock or hard starting.

⚠ CAUTION

Your New Vehicle Limited Warranty may not cover damage to the fuel system and any performance problems that are caused by the use of fuels containing methanol or fuels containing MTBE (Methyl Tertiary Butyl Ether) over 15.0% vol. (Oxygen Content 2.7% weight.)

Do not use methanol

Fuels containing methanol (wood alcohol) should not be used in your vehicle. This type of fuel can reduce vehicle performance and damage components of the fuel system, engine control system and emission control system.

Fuel additives

Kia recommends that you use unleaded gasoline which has an octane rating of RON (Research Octane Number) 95 / AKI (Antiknock Index) 91 or higher (for Europe) or Octane Rating of RON (Research Octane Number) 91 / AKI (Antiknock Index) 87 or higher (except Europe).
For customers who do not use good quality gasolines including fuel additives regularly, and have problems starting or the engine does not run smoothly, one bottle of additives added to the fuel tank at every 15,000 km (for Europe)/10,000 km (except Europe). Additives are available from a professional workshop along with information on how to use them. Kia recommends to visit an authorized Kia dealer/service partner. Do not mix other additives.

Operation in foreign countries

If you are going to drive your vehicle in another country, be sure to:

- Observe all regulations regarding registration and insurance.
- Determine that acceptable fuel is available.

VEHICLE HANDLING INSTRUCTIONS

As with other vehicles of this type, failure to operate this vehicle correctly may result in loss of control, an accident or vehicle rollover.
Specific design characteristics (higher ground clearance, track, etc.) give this vehicle a higher center of gravity than other types of vehicles. In other words they are not designed for cornering at the same speeds as conventional 2-wheel drive vehicles. Avoid sharp turns or abrupt maneuvers. Again, failure to operate this vehicle correctly may result in loss of control, an accident or vehicle rollover. **Be sure to read the driving guidelines in "Reducing the risk of a rollover" on page 6-138.**

VEHICLE MODIFICATIONS

This vehicle should not be modified. Modification of your vehicle could affect its performance, safety or durability and may even violate governmental safety and emissions regulations.
In addition, damage or performance problems resulting from any modification may not be covered under warranty.

- If you use unauthorized electronic devices, it may cause the vehicle to operate abnormally, wire damage, battery discharge and fire. For your safety, do not use unauthorized electronic devices.

VEHICLE BREAK-IN PROCESS

By following a few simple precautions for the first 1,000 km (600 miles) you may increase the performance, economy and life of your vehicle.

- Do not race the engine.
- While driving, keep your engine speed (rpm, or revolutions per minute) within 3,000 rpm.
- Do not maintain a single speed for long periods of time, either fast or slow. Varying engine speed is needed to properly break-in the engine.
- Avoid hard stops, except in emergencies, to allow the brakes to seat properly.
- Don't tow a trailer during the first 2,000 km (1,200 miles) of operation.

Fuel economy and engine performance may vary depending on vehicle break-in process and be stabilized after 6,000 km (4,000 miles).
New engines may consume more oil during the vehicle break-in period.

HEV/PHEV POWERTRAIN

By following a few simple precautions for the first 1,000 km (600 miles) you may add to the performance, economy and life of your vehicle.

- Do not race the engine.
- Avoid hard stops, except in emergencies, to allow the brakes to seat properly.

Your vehicle at a glance

Exterior overview..... 3-02
Interior overview..... 3-04
Instrument panel overview.....3-05
Engine compartment.....3-07

EXTERIOR OVERVIEW

■ Front view

❊ The actual shape may differ from the illustration.

ODEP011001L

1. Hood..... p. 5-27
2. Head lamp (Features of your vehicle)..... p. 5-114
   Head lamp (Maintenance)..... p. 8-87
3. Daytime running light (D.R.L.)..... p. 5-107
4. Fog lamp..... p. 5-113, 8-89
5. Wheel and tire..... p. 8-46, 9-09, 9-11
6. Outside rearview mirror..... p. 5-47
7. Sunroof..... p. 5-37
8. Front windshield wiper blades (Features of your vehicle)..... p. 5-116
   Front windshield wiper blades (Maintenance)..... p. 8-39
9. Windows..... p. 5-22
10. Front ultrasonic sensors..... p. 5-101
11. Roof rack..... p. 5-158
12. Charging door open (Plug-in hybrid vehicle)..... p. 1-37

■ Rear view

❊ The actual shape may differ from the illustration.

ODEP011002L

1. Door locks..... p. 5-14
2. Fuel filler door..... p. 5-29
3. Rear combination lamp (Maintenance)..... p. 8-85
4. High mounted stop lamp (Maintenance)..... p. 8-93
5. Tailgate..... p. 5-19
6. Antenna..... p. 5-160
7. Rear wiper..... p. 5-119
   and Rear view camera..... p. 5-96
8. Rear ultrasonic sensors..... p. 5-98

INTERIOR OVERVIEW

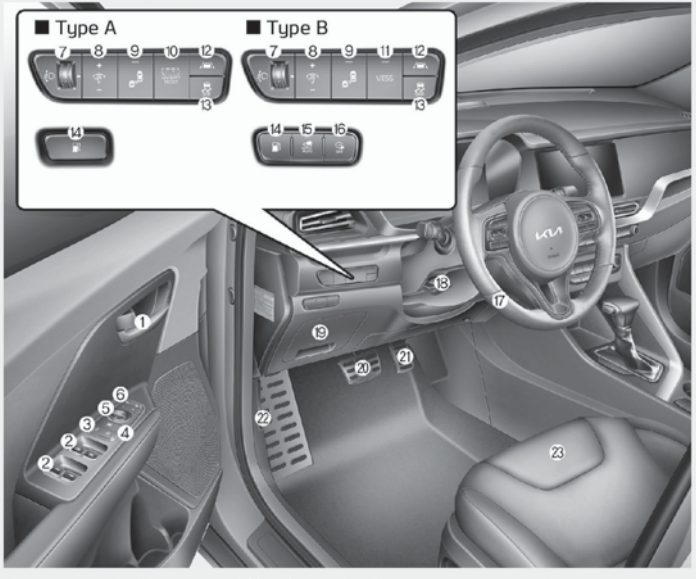

❊ The actual shape may differ from the illustration.

ODEP011005LB

1. Inside door handle..... p. 5-15
2. Power window switch..... p. 5-22
3. Central door lock switch..... p. 5-15
4. Power window lock button..... p. 5-25
5. Outside rearview mirror control..... p. 5-47
6. Outside rearview mirror folding..... p. 5-49
7. Headlight leveling device..... p. 5-114
8. Instrument panel illumination control..... p. 5-50
9. Blind-Spot Safety button..... p. 6-69
10. 12V Battery Reset switch (plug-in)..... p. 7-05
11. Virtual Engine Sound system button..... p. 1-49
12. Lane Safety button..... p. 6-63
13. ESC off button..... p. 6-41
14. Fuel filler door open button..... p. 5-29
15. Auto Lock mode button (plug-in)..... p. 1-07
16. Scheduled charging deactivation button (plug-in)..... p. 1-07
17. Steering wheel..... p. 5-42
18. Tilt and telescopic steering control lever..... p. 5-43
19. Inner fuse panel..... p. 8-57
20. Brake pedal..... p. 6-28
21. Accelerator pedal..... p. 6-28
22. Hood release lever..... p. 5-27
23. Seat..... p. 4-02

INSTRUMENT PANEL OVERVIEW

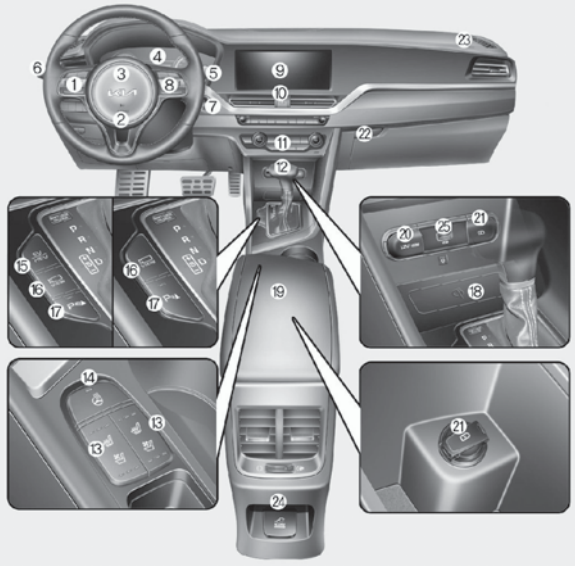

❋ The actual shape may differ from the illustration.

ODEP011004L

1. Steering wheel audio controls..... p. 5-42
2. Driver's front air bag..... p. 4-52
3. Horn..... p. 5-45
4. Instrument cluster..... p. 5-50
5. Wiper and washer control lever (right)..... p. 5-116
6. Lightning control lever..... p. 5-108
   Turn signal/headlamp control lever (left)..... p. 5-113
7. ENGINE START/STOP button..... p. 6-11
8. Driving Assist button..... p. 5-66
9. Infotainment System..... p. 5-160
10. Hazard warning flasher..... p. 7-02
11. Climate control system..... p. 5-126
12. Shift lever DCT..... p. 6-22
13. Front seat warmer..... p. 5-148
    Front air ventilation seat..... p. 5-150
14. Heated steering wheel button..... p. 5-44
15. Changing plug-in hybrid mode button ..... p. 1-33
16. Parking/View button..... p. 5-98
17. Parking Safety button..... p. 5-101
18. Smart phone wireless charger..... p. 5-154
19. Center console storage box..... p. 5-144

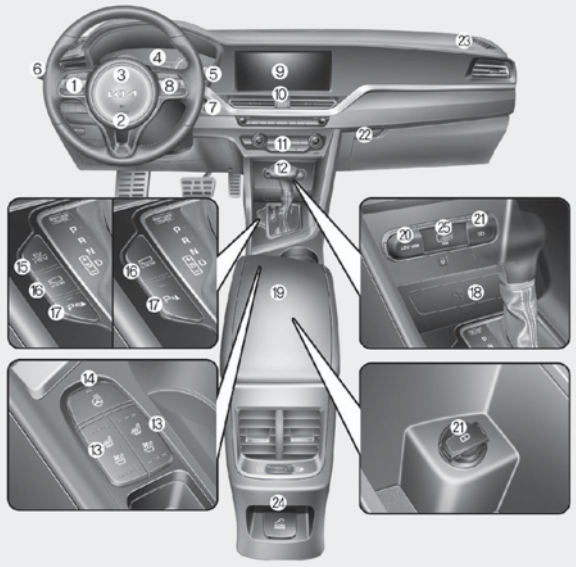

❋ The actual shape may differ from the illustration.

ODEP011004L

20. Power outlet..... p. 5-150
21. USB charger..... p. 5-151
22. Glove box..... p. 5-144
23. Passenger's front air bag..... p. 4-52
24. AC 220V inverter..... p. 5-152
25. USB port..... p. 5-160

ENGINE COMPARTMENT

■ (Gasoline) 1.6 GDi

❊ The actual engine room in the vehicle may differ from the illustration.

ODEP077001C

1. Engine coolant reservoir ..... p. 8-29
2. Engine oil filler cap ..... p. 8-27
3. Engine oil dipstick ..... p. 8-27
4. Brake fluid reservoir ..... p. 8-33
5. Inverter coolant reservoir ..... p. 8-30
6. Fuse box ..... p. 8-59
7. Engine clutch actuator reservoir tank ..... p. 8-34
8. Air cleaner ..... p. 8-37
9. Windshield washer fluid reservoir ..... p. 8-35

Safety features of your vehicle

Seats....4-02
Front seat adjustment - manual....4-05
Front seat adjustment - power....4-06
Headrest (for front seat)....4-07
Seatback pocket....4-10
Driver position memory system (for power seat)....4-11
Rear seat....4-12
Headrest....4-15
Seat belts....4-17
Seat belt restraint system....4-17
Pre-tensioner seat belt....4-27
Seat belt precautions....4-29
Care of seat belts....4-31
Child restraint system (CRS)....4-33
Child Restraint System (CRS)....4-33
Selecting a Child Restraint System (CRS)....4-33
Installing a Child Restraint System (CRS)....4-35
ISOFIX anchorage and toptether anchorage (ISOFIX anchorage system) for children....4-36
Air bag - Supplemental restraint system....4-44
How does the air bag system operate....4-45
Air bag warning light....4-48
SRS components and functions....4-49
Driver's and passenger's front air bag....4-52
Side air bag....4-58
Curtain air bag....4-60
Why didn't my air bag go off in a collision?....4-62
SRS Care....4-64
Additional safety precautions....4-65
Adding equipment to or modifying your air bag-equipped vehicle....4-66
Air bag warning label....4-66

SEATS

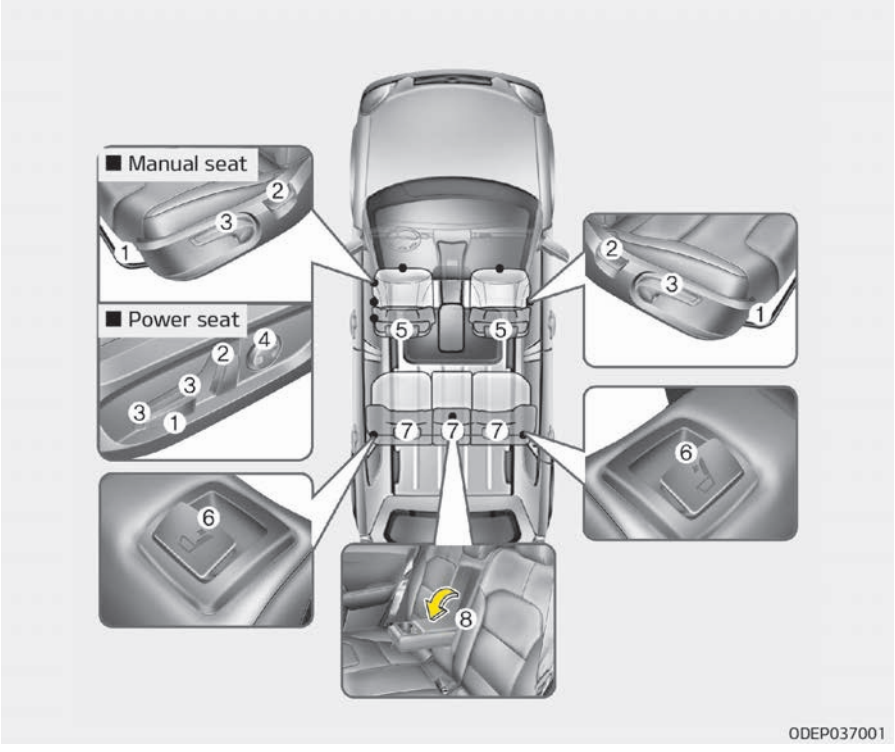

Front Seat

1. Forward and backward
2. Seatback angle
3. Seat cushion height
4. Lumbar support (Driver's seat)*
5. Head rest

Rear seat

6. Seatback folding
7. Headrest
8. Armrest

⚠ WARNING

■ Loose objects

Loose objects in the driver's foot area could interfere with the operation of the foot pedals, possibly causing an accident. Do not place anything under the front seats.

*: if equipped

⚠ WARNING

■ Uprighting seat

When you return the seatback to its upright position, hold the seatback and return it slowly and be sure there are no other occupants around the seat. If the seatback is returned without being held and controlled, the back of the seat could spring forward resulting in accidental injury to a person struck by the seatback.

⚠ WARNING

■ Driver responsibility for passengers

Riding in a vehicle with the seatback reclined could lead to serious or fatal injury in an accident. If a seat is reclined during an accident, the occupant's hips may slide under the lap portion of the seat belt applying great force to the unprotected abdomen. Serious or fatal internal injuries could result. The driver must advise the passenger to keep the seatback in an upright position whenever the vehicle is in motion.

⚠ WARNING

Do not use a sitting cushion that reduces friction between the seat and passenger. The passenger's hips may slide under the lap portion of the seat belt during an accident or a sudden stop. Serious or fatal internal injuries could result because the seat belt cannot operate normally.

⚠ WARNING

■ Driver's seat

- **Never attempt to adjust the seat while the vehicle is moving. This could result in loss of control, and an accident causing death, serious injury, or property damage.**
- **Do not allow anything to interfere with the normal position of the seatback. Storing items against a seatback or in any other way interfering with proper locking of a seatback could result in serious or fatal injury in a sudden stop or collision.**

(Continued)

(Continued)

- **Always drive and ride with your seatback upright and the lap portion of the seat belt snug and low across the hips. This is the best position to protect you in case of an accident.**
- **In order to avoid unnecessary and perhaps severe air bag injuries, always sit as far back as possible from the steering wheel while maintaining comfortable control of the vehicle. We recommend that your chest be at least 25 cm (10 inches) away from the steering wheel.**

⚠ WARNING

■ Rear seatbacks

(Continued)

(Continued)

- **The rear seatback must be securely latched. If not, passengers and objects could be thrown forward resulting in serious injury or death in the event of a sudden stop or collision.**
- **Luggage and other cargo should be laid flat in the cargo area. If objects are large, heavy, or must be piled, they must be secured.**
  Under no circumstances should cargo be piled higher than the seatbacks. Failure to follow these warnings could result in serious injury or death in the event of a sudden stop, collision or rollover.
- **No passenger should ride in the cargo area or sit or lie on folded seatbacks while the vehicle is moving. All passengers must be properly seated in seats and restrained properly while riding.**

(Continued)

(Continued)

- **When resetting the seatback to the upright position, make sure it is securely latched by pushing it forward and backwards.**
- **To avoid the possibility of burns, do not remove the carpet in the cargo area. Emission control devices beneath this floor generate high temperatures.**

⚠ WARNING

After adjusting the seat, always check that it is securely locked into place by attempting to move the seat forward or backward without using the lock release lever. Sudden or unexpected movement of the driver's seat could cause you to lose control of the vehicle resulting in an accident.

⚠ WARNING

- **Do not adjust the seat while wearing seat belts. Moving the seat cushion forward may cause strong pressure on the abdomen.**
- **Use extreme caution so that hands or other objects are not caught in the seat mechanisms while the seat is moving.**
- **Do not put a cigarette lighter on the floor or seat. When you operate the seat, gas may gush out of the lighter and cause fire.**
- **If there are occupants in the rear seats, be careful while adjusting the front seat position.**
- **Use extreme caution when picking small objects trapped under the seats or between the seat and the center console. Your hands might be cut or injured by the sharp edges of the seat mechanism.**

Feature of Seat Leather

- Leather is made from the outer skin of an animal, which goes through a special process to be available for use. Since it is a natural substance, each part differs in thickness or density.
  Wrinkles may appear as a natural result of stretching and shrinking depending on the temperature and humidity.
- The seat cover is made of stretchable material to improve comfort of passengers.
- The parts contacting the body are curved and the side supporting area is high which provides driving comfort and stability.
- Wrinkles may appear naturally from usage. It is not a fault of the product.

⚠ CAUTION

- **Wrinkles or abrasions which appear naturally from usage are not covered by warranty.**

(Continued)

(Continued)

- **Belts with metallic accessories, zippers or keys inside the back pocket may damage the seat fabric.**
- **Make sure not to wet the seat. It may change the nature of natural leather.**
- **Jeans or clothes which could bleach may contaminate the surface of the seat covering fabric.**

Front seat adjustment - manual

Forward and backward (1)

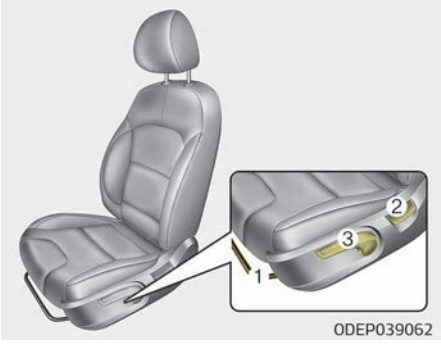

To move the seat forward or backward:

1. Pull the seat slide adjustment lever up and hold it.
2. Slide the seat to the position you desire.
3. Release the lever and make sure the seat is locked in place.

Adjust the seat before driving, and make sure the seat is locked securely by trying to move forward and backward without using the lever. If the seat moves, it is not locked properly.

Seatback angle (2)

To recline the seatback:

1. Lean forward slightly and lift up the seatback recline lever.
2. Carefully lean back on the seat and adjust the seatback of the seat to the position you desire.
3. Release the lever and make sure the seatback is locked in place. (The lever MUST return to its original position for the seatback to lock.)

Reclining seatback

Sitting in a reclined position when the vehicle is in motion can be dangerous. Even when buckled up, the protections of your restraint system (seat belts and/or air bags) is greatly reduced by reclining your seatback.

⚠ CAUTION

NEVER ride with a reclined seatback when the vehicle is moving.
Riding with a reclined seatback increases your chance of serious or fa-
(Continued)

(Continued)

tal injuries in the event of a collision or sudden stop.
Drivers and passengers should ALWAYS sit well back in their seats, properly belted, and with the seatbacks upright.

Seat belts must be snug against your hips and chest to work properly. When the seatback is reclined, the shoulder belt cannot do its job because it will not be snug against your chest. Instead, it will be in front of you. During an accident, you could be thrown into the seat belt, causing neck or other injuries.
The more the seatback is reclined, the greater chance the passenger's hips will slide under the lap belt or the passenger's neck will strike the shoulder belt.

Seat height (3)

To change the height of the seat, push the lever upwards or downwards.

- To lower the seat cushion, push the lever down several times.
- To raise the seat cushion, pull the lever up several times.

Front seat adjustment - power (if equipped)

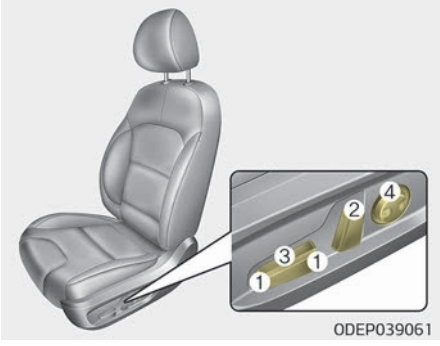

The front seat can be adjusted by using the control switches located on the outside of the seat cushion. Before driving, adjust the seat to the proper position so you can easily control the steering wheel, pedals and switches on the instrument panel.

⚠ WARNING

The power seat is operable with the ignition OFF.
(Continued)

(Continued)

Therefore, children should never be left unattended in the vehicle.

⚠ CAUTION

- **The power seat is driven by an electric motor. Stop operating once the adjustment is completed. Excessive operation may damage the electrical equipment.**
- **When in operation, the power seat consumes a large amount of electrical power. To prevent unnecessary charging system drain, don't adjust the power seat longer than necessary while the engine is not running.**
- **Do not operate two or more power seat control switches at the same time. Doing so may result in power seat motor or electrical component malfunction.**

Forward and backward (1)

Push the control switch forward or backward to move the seat to the desired position. Release the switch once the seat reaches the desired position.

Seatback angle (2)

Push the control switch forward or backward to move the seatback to the desired angle. Release the switch once the seat reaches the desired position.

Seat height (3)

Pull the front portion of the control switch up to raise or press down to lower the front part of the seat cushion. Pull the rear portion of the control switch up to raise or press down to lower the rear part of the seat cushion. Release the switch once the seat reaches the desired position.

Lumbar support (for driver's seat, if equipped) (4)

The lumbar support can be adjusted by pressing the lumbar support switch on the side of the seat.

1. Press the front portion of the switch to increase support, or the rear portion of the switch, to decrease support.
2. Release the switch once it reaches the desired position.

Headrest (for front seat)

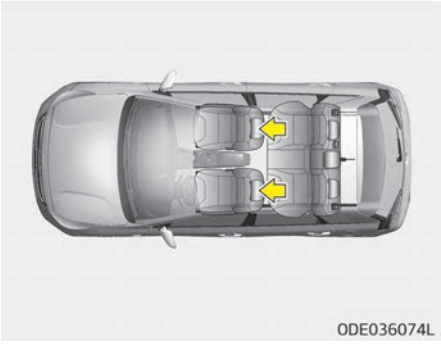

The driver's and front passenger's seats are equipped with a headrest for the occupant's safety and comfort.
The headrest not only provides comfort for the driver and front passenger, but also helps protect the head and neck in the event of a collision.

⚠ WARNING

- **For maximum effectiveness in case of an accident, the headrest should be adjusted so the middle of the headrest is at the same height of the center of gravity of an occupant's head. Generally, the center of gravity of most people's head is similar with the height of the top of their eyes. Also, adjust the headrest as close to your head as possible. For this reason, the use of a cushion that holds the body away from the seatback is not recommended.**
- **Do not operate the vehicle with the headrests removed. Severe injury to the occupants may occur in the event of an accident. Headrests may provide protection against neck injuries when properly adjusted.**
- **Do not adjust the headrest position of the driver's seat while the vehicle is in motion.**

Adjusting the height up and down

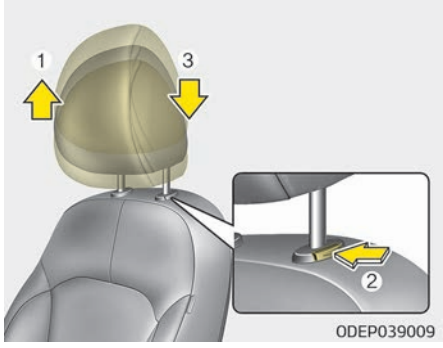

To raise the headrest, pull it up to the desired position (1). To lower the headrest, push and hold the release button (2) and lower the headrest to the desired position (3).

Forward and backward adjustment

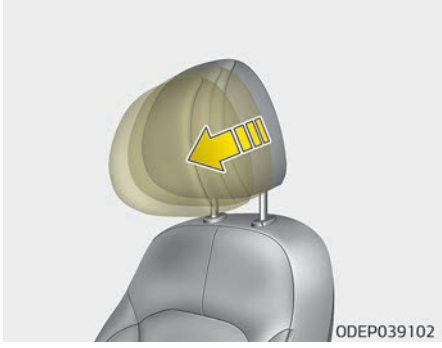

The headrest may be adjusted forward to 3 different positions by pulling the headrest forward to the desired detent.
To adjust the headrest to its furthest backwards position,
Pull the headrest fully forward to the farthest position and release it.
Adjust the headrest so that it properly supports the head and neck.

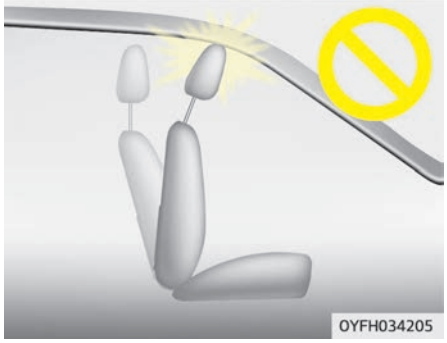

⚠ CAUTION

If you recline the seatback towards the front with the headrest and seat cushion raised, the headrest may come in contact with the sun visor or other parts of the vehicle.

Removal/Reinstall

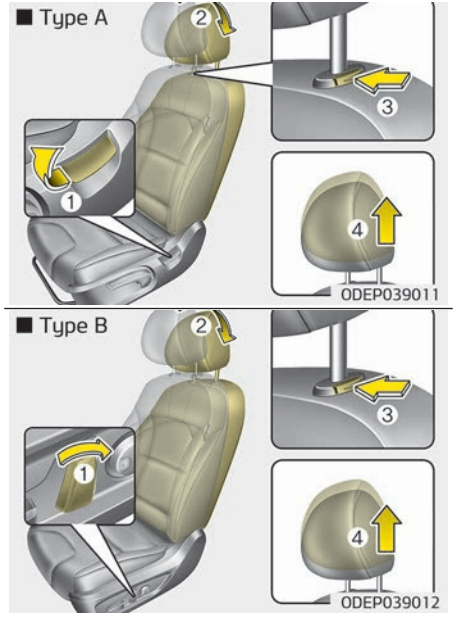

To remove the headrest:

1. Recline the seatback (2) with the recline dial or switch (1).
2. Raise headrest as far as it can go.
3. Press the headrest release button (3) while pulling the headrest up (4).

⚠ WARNING

NEVER allow anyone to ride in a seat with the headrest removed or reversed.

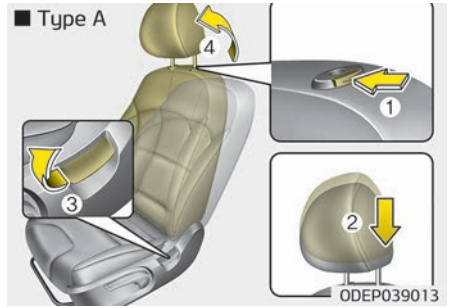

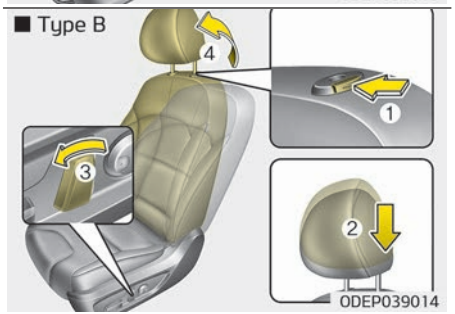

To reinstall the headrest:

1. Put the headrest poles (2) into the holes while pressing the release button or switch (1).
2. Recline the seatback (4) with the recline dial or switch (3).
3. Adjust the headrest to the appropriate height.

⚠ WARNING

Always make sure the headrest locks into position after reinstalling and adjusting it properly.

Seatback pocket

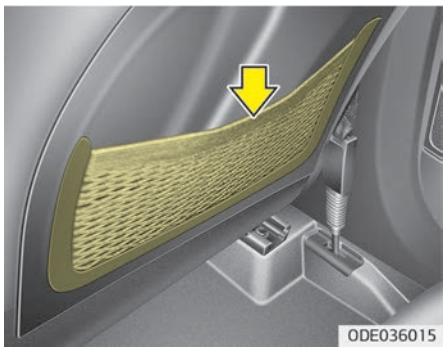

The seatback pocket is provided on the back of the front passenger's and driver's seatbacks.

⚠ WARNING

■ Seatback pockets

Do not put heavy or sharp objects in the seatback pockets. In an accident they could come loose from the pocket and injure vehicle occupants.

Driver position memory system (if equipped, for power seat)

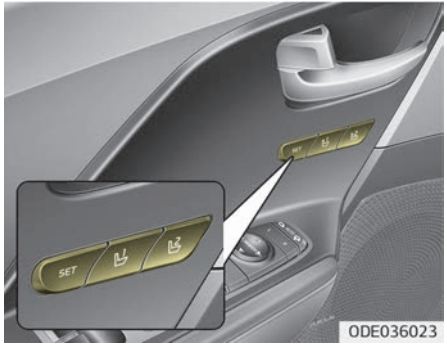

A driver position memory system is provided to store and recall the driver seat and outside rearview mirror position with a simple button operation. By saving the desired position into the system memory, different drivers can reposition the driver seat based upon their driving preference. If the battery is disconnected, the position memory will be erased and the driving position should be restored in the system.

⚠ WARNING

Never attempt to operate the driver position memory system while the vehicle is moving.
This could result in loss of control, and an accident causing death, serious injury, or property damage.

Storing positions into memory using the buttons on the door

Storing driver's seat positions

1. Shift the shift lever into P while the ENGINE START/STOP button is ON or ignition switch ON.
2. Adjust the driver's seat and outside rearview mirror comfortable for the driver.
3. Press SET button on the control panel. The system will beep once.
4. Press one of the memory buttons (1 or 2) within 4 seconds after pressing the SET button. The system will beep twice when memory has been successfully stored.

Recalling positions from memory

1. Shift the shift lever into P while the ENGINE START/STOP button is ON or ignition switch ON.
2. To recall the position in the memory, press the desired memory button (1 or 2). The system will beep once, then the driver's seat will automatically adjust to the stored position.

Adjusting the control switch for the driver's seat while the system is recalling the stored position will cause the movement to stop and move in the direction that the control switch is moved.

⚠ WARNING

Use caution when recalling the adjustment memory while sitting in the vehicle. Push the seat position control switch to the desired position immediately if the seat moves too far in any direction.

Easy access function (if equipped)

The system will move the driver's seat automatically as follows:

- Without smart key system
  - It will move the driver's seat rearward when the ignition key is removed and front driver's door is opened.
  - It will move the driver's seat forward when the ignition key is inserted.
- With smart key system
  - It will move the driver's seat rearward when the ENGINE START/STOP button is changed to the OFF position and front driver's door is opened.
  - It will move the driver's seat forward when the ENGINE START/STOP button is changed to the ACC or START position.
  - It will move the driver's seat forward when you get in your vehicle with the smart key after closing the driver's door.

You can activate or deactivate this feature. Refer to "User settings" on page 5-62.

Rear seat

Folding the rear seat

The rear seatbacks can be folded to facilitate carrying long items or to increase the luggage capacity of the vehicle.

⚠ WARNING

The purpose of the fold-down rear seatbacks is to allow you to carry longer objects that could not be accommodated in the cargo area.
Never allow passengers to sit on top of the folded down seatback while the vehicle is moving. This is not a proper seating position and no seat belts are available for use. This could result in serious injury or death in case of an accident or sudden stop.
Objects carried on the folded down seatback should not extend higher than the top of the front seatbacks. This could allow cargo to slide forward and cause injury or damage during sudden stops.

⚠ CAUTION

■ Blocked Hybrid battery duct

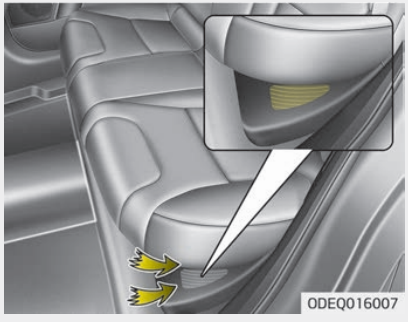

Do not put objects on the left side of rear seats. This could block the battery cooling duct causing battery degradation.

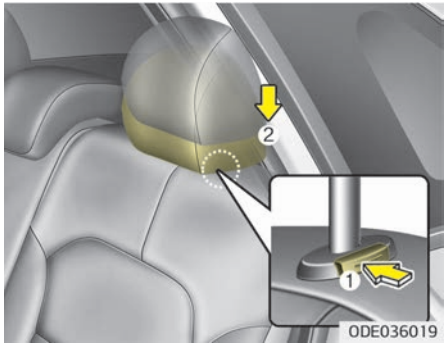

To fold down the rear seatback:

1. Set the front seatback to the upright position and if necessary, slide the front seat forward.
2. Lower the rear head restraints to the lowest position.

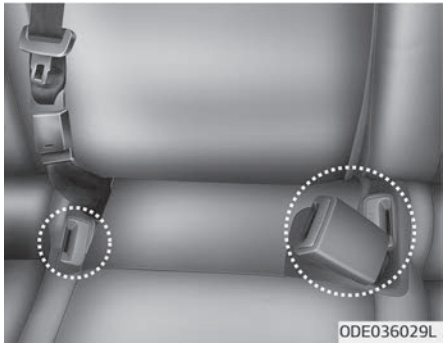

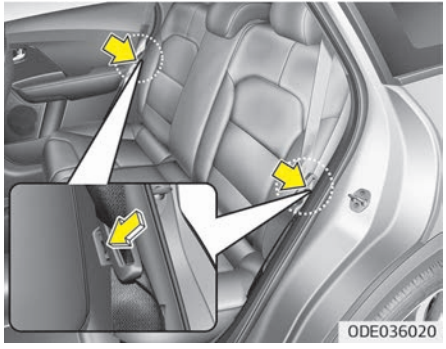

3. When folding the seat back, insert the rear seat belt buckle in the pocket between the rear seatback and cushion then make sure both seatbelts do not interfere with stowed luggage and cargo. Then, insert the seat belt into the two holes located on both sides.

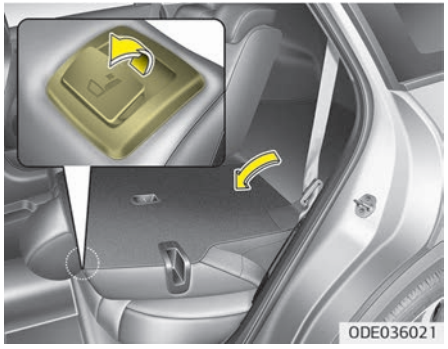

4. Pull on the seatback folding lever, then fold the seat toward the front of the vehicle. When you return the seatback to its upright position, always be sure it has locked into position by pushing on the top of the seatback.

5. To use the rear seat, lift and pull the seatback backward by lifting up the seatback. Pull the seatback firmly until it clicks into place. Make sure the seatback is locked in place.
6. Return the rear seat belt to the proper position.

⚠ WARNING

When returning the rear seatback from a folded to an upright position, hold the seatback and return it slowly. Ensure that the seatback is completely locked into its upright position by pushing on the top of the

(Continued)

(Continued)

seatback. In an accident or sudden stop, the unlocked seatback could allow cargo to move forward with great force and enter the passenger compartment, which could result in serious injury or death.

⚠ WARNING

Do not place objects in the rear seats, since they cannot be properly secured and may hit vehicle occupants in a collision causing serious injury or death.

⚠ WARNING

Make sure the engine is off, the shift lever is in P (Park), and the parking brake is securely applied whenever loading or unloading cargo. Failure to take these steps may allow the vehicle to move if the shift lever is inadvertently moved to another position.

Armrest

To use the armrest, pull it forward from the seatback.

Headrest

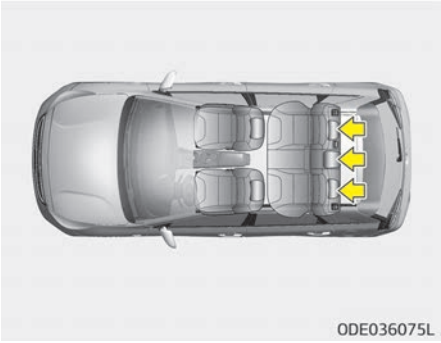

The rear seat(s) is equipped with headrests in all the seating positions for the occupant's safety and comfort. The headrest not only provides comfort for passengers, but also helps protect the head and neck in the event of a collision.

⚠ WARNING

- **For maximum effectiveness in case of an accident, the headrest should be adjusted so the middle of the headrest is at the same height of the center of gravity of an occupant's head.**
  Generally, the center of gravity of most people's head is similar with the height of the top of their eyes. Also adjust the headrest as close to your head as possible. For this reason, the use of a cushion that holds the body away from the seatback is not recommended.
- **Do not operate the vehicle with the headrests removed. Severe injury to an occupant may occur in the event of an accident. Headrests may provide protection against severe neck injuries when properly adjusted.**

⚠ CAUTION

When there is no occupant in the rear seats, adjust the height of the headrest to the lowest position. The rear seat headrest can reduce the visibility of the rear area.

Adjusting the height up and down

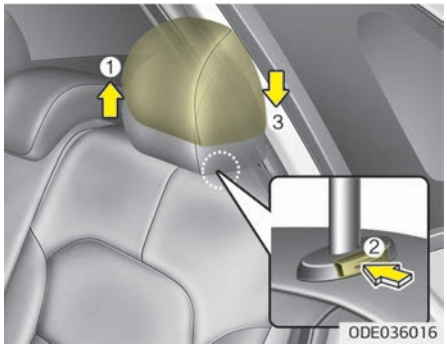

To raise the headrest, pull it up to the desired position (1). To lower the headrest, push and hold the release button (2) on the headrest support and lower the headrest to the desired position (3).

Removal and installation

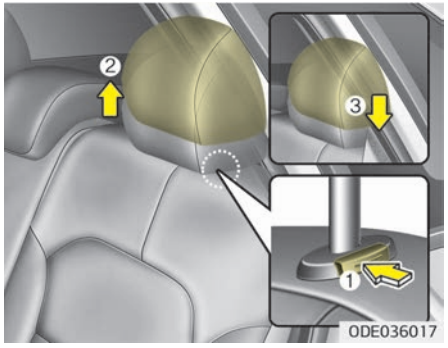

To remove the headrest, raise it as far as it can go then press the release button (1) while pulling the headrest up (2).
To reinstall the headrest, put the headrest poles (3) into the holes while pressing the release button (1). Then adjust it to the appropriate height.

⚠ WARNING

Make sure the headrest locks in position after adjusting it to properly protect the occupants.

SEAT BELTS

Seat belt restraint system

⚠ WARNING

- For maximum restraint system protection, the seat belts must always be used whenever the vehicle is moving.
- Seat belts are most effective when seatbacks are in the upright position.
- Children age 12 and under must always be properly restrained. If a child over 12 must be seated in the front seat, he/she must be properly belted and the seat should be moved as far back as possible.
- Never wear the shoulder belt under your arm or behind your back. An improperly positioned shoulder belt can cause serious injuries in a crash.
  The shoulder belt should be positioned midway over your shoulder across your collarbone.

(Continued)

(Continued)

- Never wear a seat belt over fragile objects. If there is a sudden stop or impact, the seat belt can damage it.
- Avoid wearing twisted seat belts. A twisted belt can't do its job well. In a collision, it could even cut into you. Be sure the belt webbing is straight and not twisted.
- Be careful not to damage the belt webbing or hardware. If the belt webbing or hardware is damaged, replace it.

⚠ WARNING

Seat belts are designed to bear upon the bony structure of the body, and should be worn low across the front of the pelvis or the pelvis, chest and shoulders, as applicable; wearing the lap section of the belt across the abdominal area must be avoided.
Seat belts should be adjusted as firmly as possible, consistent with

(Continued)

(Continued)

comfort, to provide the protection for which they have been designed.
A slack belt will greatly reduce the protection afforded to the wearer.
Care should be taken to avoid contamination of the webbing with polishes, oils and chemicals, and particularly battery acid. Cleaning may safely be carried out using mild soap and water. The belt should be replaced if webbing becomes frayed, contaminated or damaged. It is essential to replace the entire assembly after it has been worn in a severe impact even if damage to the assembly is not obvious. Belts should not be worn with straps twisted. Each belt assembly must only be used by one occupant; it is dangerous to put a belt around a child being carried on the occupant's lap.

⚠ WARNING

- **No modifications or additions should be made by the user which will either prevent the seat belt adjusting devices from operating to remove slack, or prevent the seat belt assembly from being adjusted to remove slack.**
- **When you fasten the seat belt, be careful not to latch the seat belt in buckles of other seat. It's very dangerous and you may not be protected by the seat belt properly.**
- **Do not unfasten the seat belt and do not fasten and unfasten the seat belt repeatedly while driving. This could result in loss of control, and an accident causing death, serious injury, or property damage.**
- **When fastening the seat belt, make sure that the seat belt does not pass over objects that are hard or can break easily.**
- **Make sure there is nothing in the buckle. The seat belt may not be fastened securely.**

Front seat belt warning

Driving conditions	Conditions		Warning pattern	
	Seat belt	Vehicle speed	Light	Sound
While parked (Ignition switch ON)	Buckled	0 km/h	Illuminates (for 6 seconds)	No sound
	Unbuckled		Continuously illuminates	Sounds (for 6 seconds, driver's seat) No sound (for passenger's seat)

Driving conditions	Conditions		Warning pattern	
	Seat belt	Vehicle speed	Light	Sound
While driven	Unbuckled	Less than 20 km/h	Continuously illuminates	No sound
		Including and more than 20 km/h	Blinks continuously	Alarm sounds for 100 seconds
	When the seatbelt is unbuckled after use	Less than 20 km/h	Continuously illuminates	No sound
		Including and more than 20 km/h	Blinks continuously	Alarm sounds for 100 seconds

⚠ WARNING

Riding in an improper position adversely affects the front seat belt warning system. It is important for the driver to instruct the passenger to properly be seated as instructed in this manual.

✻ NOTICE

- You can find the front passenger's seat belt warning light on the center fascia panel.
- Although the front passenger seat is not occupied, the seat belt warning light will blink or illuminate for 6 seconds.
- The front passenger's seat belt warning may operate when luggage is placed on the front passenger seat.

Rear passenger's seat belt warning

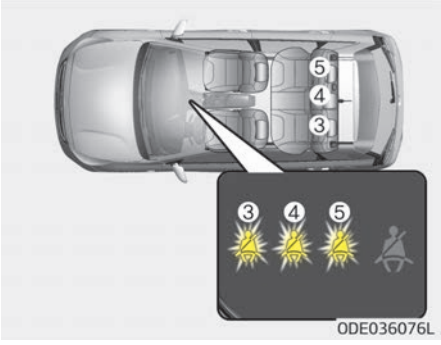

If the rear passenger's lap/shoulder belt is/are connected and disconnected twice within 9 seconds after the belt is fastened, the corresponding seat belt warning light will not operate.

Driving conditions	Conditions		Warning pattern	
	Seat belt	Vehicle speed	Light	Sound
While parked (Ignition switch ON)	Buckled	0 km/h	Illuminates (for 6 seconds)	No sound
	Unbuckled			

Driving conditions	Conditions		Warning pattern	
	Seat belt	Vehicle speed	Light	Sound
While driven	Unbuckled	Equal to or less than 9 km/h	Doesn't illuminate	No sound
		Over 9 km/h	Illuminates (for 35 seconds)	
	When the seatbelt is unbuckled after use	Under 20 km/h	Illuminates (for 35 seconds)	No sound
		Over 20 km/h	Blinks continuously (for 35 seconds)	Sound (for 35 seconds)

Lap/Shoulder belt

Height adjustment (For Front seat)

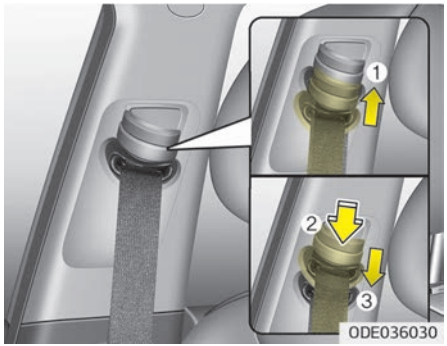

You can adjust the height of the shoulder belt anchor to one of 4 positions for maximum comfort and safety.
The height of the adjusting seat belt should not be too close to your neck. You will not be getting the most effective protection. The shoulder portion should be adjusted so that it lies across your chest and midway over your shoulder near the door and not your neck.
To adjust the height of the seat belt anchor, lower or raise the height adjuster into an appropriate position.

To raise the height adjuster, pull it up (1). To lower it, push it down (3) while pressing the height adjuster button (2). Release the button to lock the anchor into position. Try sliding the height adjuster to make sure that it has locked into position.
Improperly positioned seat belts can cause serious injuries in an accident.

⚠ WARNING

- **Verify the shoulder belt anchor is locked into position at the appropriate height. Never position the shoulder belt across your neck or face.**
- **Failure to replace seat belts after an accident could leave you with damaged seat belts that will not provide protection in the event of another collision leading to personal injury or death. Replace your seat belts after being in an accident as soon as possible.**

To fasten your seat belt:

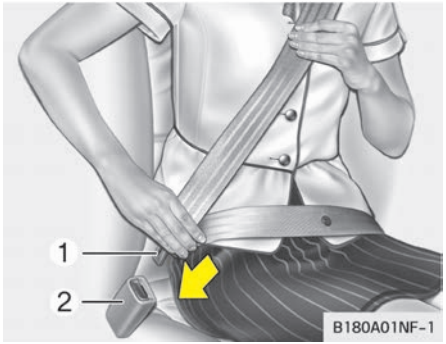

To fasten your seat belt, pull it out of the retractor and insert the metal tab (1) into the buckle (2). There will be an audible "click" when the tab locks into the buckle.
The seat belt automatically adjusts to the proper length only after the lap belt portion is adjusted manually so that it fits snugly around your hips. If you lean forward in a slow, easy motion, the belt will extend and let you move around. If there is a sudden stop or impact, however, the belt will lock into position. It will also lock if you try to lean forward too quickly.

✻ NOTICE

If you are not able to pull out the seat belt from the retractor, firmly pull the belt out and release it. Then you will be able to pull the belt out smoothly.

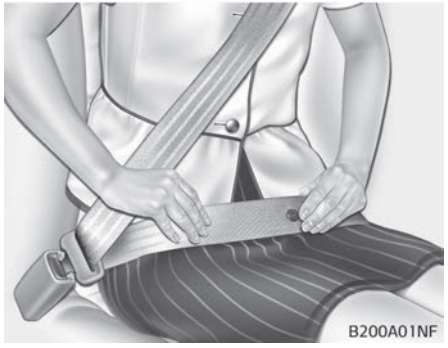

⚠ WARNING

You should place the lap belt portion as low as possible and snugly across your hips, not on your waist. If the lap belt is located too high on your

(Continued)

(Continued)

waist, it may increase the chance of injury in the event of a collision. Both arms should not be under or over the belt. Rather, one should be over and the other under, as shown in the illustration.
Never wear the seat belt under the arm near the door.

To release the seat belt:

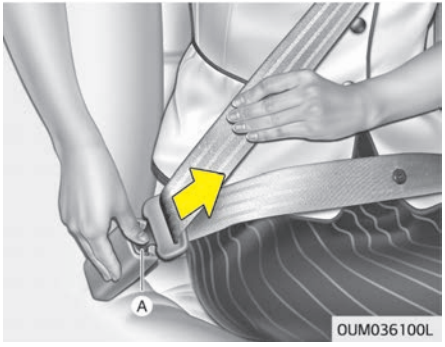

The seat belt is released by pressing the release button (A) in the locking buckle. When it is released, the belt should automatically draw back into the retractor.

If this does not happen, check the belt to be sure it is not twisted, then try again.

Lap belt (if equipped)

To fasten your seat belt:

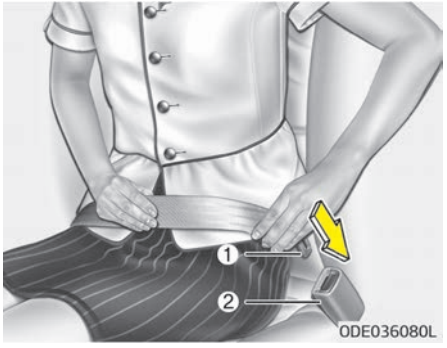

To fasten a 2-point static type belt, insert the metal tab (1) into the locking buckle (2). There will be an audible "click" when the tab locks into the buckle. Check to make sure the belt is properly locked and that the belt is not twisted.

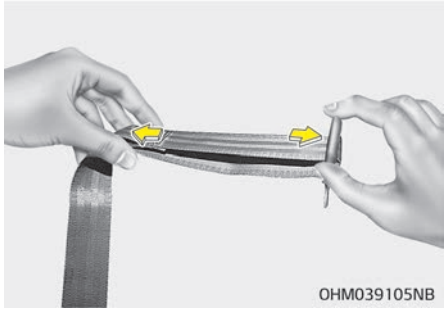

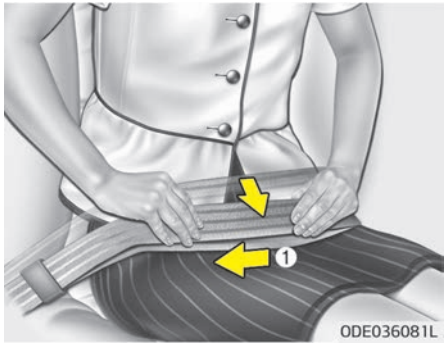

With a 2-point static type seat belt, the length must be adjusted manually so it fits snugly around your body. Fasten the belt and pull on the loose end to tighten. The belt should be placed as low as possible on your hips (1), not on your waist. If the belt is too high, it could increase the possibility of your being injured in an accident.
When using the rear center seat belt, the buckle with the "CENTER" mark must be used.

To release the seat belt:

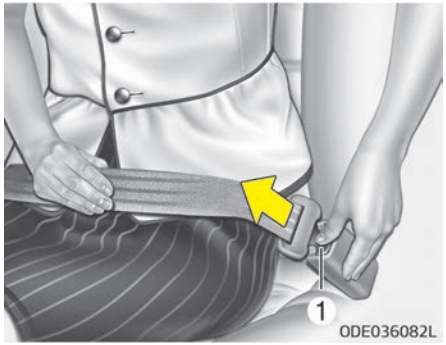

When you want to release the seat belt, press the button (1) in the locking buckle.

⚠ WARNING

The center lap belt latching mechanism is different from those for the rear seat shoulder belts. When fastening the rear seat shoulder belts or the center lap belt, make sure they are inserted into the correct buckles to obtain maximum protection from the seat belt system and assure proper operation.

Stowing the rear seat belt

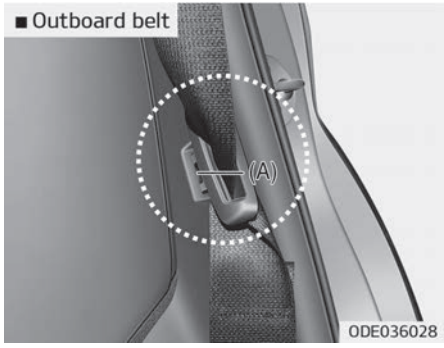

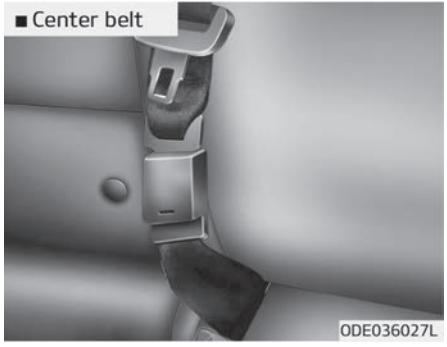

- If the center seat belt is not in use, always lock the latch plate into the buckle as above illustration.
- The rear seat belt buckles can be stowed in the pocket between the rear seatback and cushion when not in use.
- Insert the seat belt into the two holes located on both sides. It will help keep the belts from being trapped behind or under the seats.
  After inserting the seat belt, tighten the belt webbing by pulling it up.

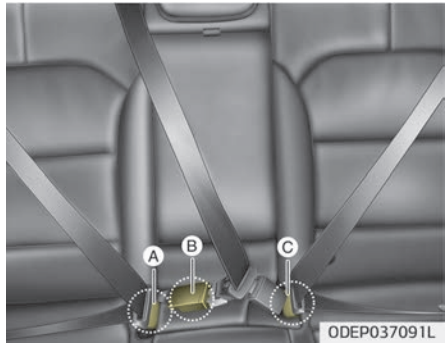

The seat belt should be locked into the buckle on each seat cushion to be properly fastened.

❈ A : Rear right seat belt fastening buckle
B : Rear center seat belt fastening buckle
C : Rear left seat belt fastening buckle

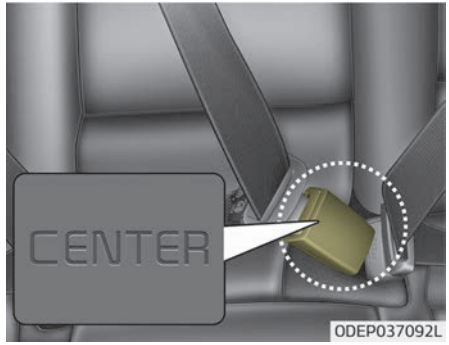

When using the rear center seat belt, the buckle with the "CENTER" mark must be used.

⚠ CAUTION

Do not force to lock the left or right seat belt into the center seat belt buckle.
Make sure to lock the rear center seat belt into the center seat belt buckle.

(Continued)

(Continued)

If not, the improperly fastened seat belt will not be able to provide protection.

Pre-tensioner seat belt (if equipped)

Your vehicle is equipped with driver's and front passenger's and rear side passenger's (if equipped) pre-tensioner seat belts (retractor pre-tensioner). The pre-tensioner seat belts can be activated, where the frontal collision is severe enough, together with the air bags.

When the vehicle stops suddenly, or if the occupant tries to lean forward too quickly, the seat belt retractor will lock into position. In certain frontal collisions, the pre-tensioner will activate and pull the seat belt into tighter contact against the occupant's body.

- Retractor Pre-tensioner
  The purpose of the retractor pre-tensioner is to make sure that the shoulder belts fit in tightly against the occupant's upper body in certain frontal collisions.

If the system senses excessive tension on the driver or passenger's seat belt when the pre-tensioner system activates, the load limiter inside the retractor pre-tensioner will release some of the pressure on the affected seat belt. (if equipped)

⚠ WARNING

For your safety, be sure that the belt webbing is not loose or twisted and always sit properly on your seat.

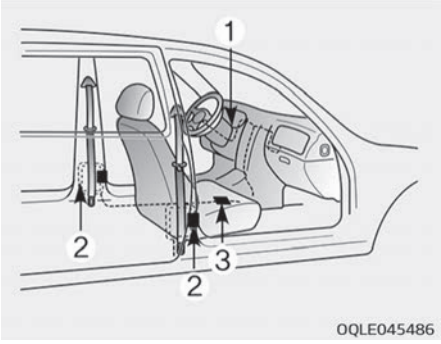

The seat belt pre-tensioner system consists mainly of the following components. Their locations are shown in the illustration:

1. SRS air bag warning light
2. Retractor pre-tensioner assembly
3. SRS control module

⚠ WARNING

To obtain maximum benefit from a pre-tensioner seat belt:

(Continued)

(Continued)

1. **The seatbelt must be worn correctly and adjusted to the proper position. Please read and follow all of the important information and precautions about your vehicle's occupant safety features – including seat belts and air bags – that are provided in this manual.**
2. **Be sure you and your passengers always wear seat belts properly.**

NOTICE

- When the pre-tensioner seat belts are activated, a loud noise may be heard and fine dust, which may appear to be smoke, may be visible in the passenger compartment. These are normal operating conditions and are not hazardous.

(Continued)

(Continued)

- Although it is harmless, the fine dust may cause skin irritation and should not be breathed for prolonged periods. Wash all exposed skin areas thoroughly after an accident in which the pre-tensioner seat belts were activated.
- Because the sensor that activates the SRS air bag is connected with the pre-tensioner seat belt, the SRS air bag warning light on the instrument panel will illuminate for approximately 6 seconds after the ignition switch has been turned to the "ON" position, and then it should turn off.

CAUTION

If the pre-tensioner seat belt is not working properly, the SRS air bag warning light will illuminate even if there is no malfunction of the SRS air bag. If the SRS air bag warning

(Continued)

(Continued)

light does not illuminate when the ignition key is turned to ON, or if it remains illuminated after illuminating for approximately 6 seconds, or if it illuminates while the vehicle is being driven, have the system inspected by a professional workshop. Kia recommends to visit an authorized Kia dealer/service partner.

WARNING

- **Pre-tensioners are designed to operate only one time. After activation, pre-tensioner seat belts must be replaced. All seat belts, of any type, should always be replaced after they have been worn during a collision.**
- **The pre-tensioner seat belt assembly mechanisms become hot during activation. Do not touch the pre-tensioner seat belt assemblies for several minutes after they have been activated.**

(Continued)

(Continued)

- **Do not attempt to inspect or replace the pre-tensioner seat belts yourself. Have the system inspected by a professional workshop. Kia recommends to visit an authorized Kia dealer/service partner.**
- **Do not attempt to service or repair the pre-tensioner seat belt system in any manner.**
- **Improper handling of the pre-tensioner seat belt assemblies, and failure to heed the warnings not to strike, modify, inspect, replace, service or repair the pre-tensioner seat belt assemblies may lead to improper operation or inadvertent activation and serious injury.**
- **Always wear the seat belts when driving or riding in a motor vehicle.**
- **If the vehicle or pre-tensioner seat belt must be discarded, contact a professional workshop. Kia recommends to visit an authorized Kia dealer/service partner.**

⚠ CAUTION

Body work on the front area of the vehicle may damage the pre-tensioner seat belt system. Therefore, have the system serviced by a professional workshop. Kia recommends to visit an authorized Kia dealer/service partner.

Seat belt precautions

⚠ WARNING

All occupants of the vehicle must wear their seat belts at all times. Seat belts and child restraints reduce the risk of serious or fatal injuries for all occupants in the event of a collision or sudden stop. Without a seat belt, occupants could be shifted too close to a deploying air bag, strike the interior structure or be thrown from the vehicle. Properly worn seat belts greatly reduce these hazards.
Always follow the precautions about seat belts, air bags and occupant seating contained in this manual.

Infant or small child

You should be aware of the specific requirements in your country. Child and/or infant seats must be properly placed and installed in the vehicle seat. For more information about the use of these restraints, refer to "Child restraint system" on page 4-33.

⚠ WARNING

Every person in your vehicle needs to be properly restrained at all times, including infants and children. Never hold a child in your arms or lap when riding in a vehicle. The violent forces created during a crash will tear the child from your arms and throw the child against the interior. Always use a child restraint appropriate for your child's height and weight.

✻ NOTICE

Small children are best protected from injury in an accident when

(Continued)

(Continued)

properly restrained in the rear seat by a child restraint system that meets the requirements of the Safety Standards of your country. Before buying any child restraint system, make sure that it has a label certifying that it meets Safety Standards of your country. The restraint must be appropriate for your child's height and weight. Check the label on the child restraint for this information. Refer to "Child restraint system" on page 4-33.

Larger children

Children who are too large for child restraint systems should always occupy the rear seat and use the available lap/shoulder belts. The lap portion should be fastened and snugged on the hips and as low as possible. Check if the belt fits periodically. A child's squirming could put the belt out of position. Children are given the most safety in the event of an accident when they are restrained by a proper restraint system in the rear seat. If a larger child (over age 13) must be seated in the front seat, the child should be securely restrained by the available lap/shoulder belt and the seat should be placed in the rearmost position. Children age 13 and under should be restrained securely in the rear seat. NEVER place a rear facing child seat in the front seat of a vehicle, unless the air bag is deactivated.

If the shoulder belt portion slightly touches the child's neck or face, try placing the child closer to the center of the vehicle. If the shoulder belt still touches their face or neck they need to be returned to a child restraint system.

⚠ WARNING

■ Shoulder belts on small children

- **Never allow a shoulder belt to be in contact with a child's neck or face while the vehicle is in motion.**
- **If seat belts are not properly worn and adjusted on children, there is a risk of death or serious injury.**

Pregnant women

The use of a seat belt is recommended for pregnant women to lessen the chance of injury in an accident. When a seat belt is used, the lap belt portion should be placed as low and securely as possible on the hips, not across the abdomen. For specific recommendations, consult a physician.

⚠ WARNING

■ Pregnant women

(Continued)

(Continued)

Pregnant women must never place the lap portion of the safety belt over the area of the abdomen where the fetus is located or above the abdomen where the belt could crush the fetus during an impact.

Injured person

A seat belt should be used when an injured person is being transported. When this is necessary, you should consult a physician for recommendations.

One person per belt

Two people (including children) should never attempt to use a single seat belt. This could increase the severity of injuries in case of an accident.

Do not lie down

To reduce the chance of injuries in the event of an accident and to achieve maximum effectiveness of the restraint system, all passengers should be sitting up and the front and rear seats should be in an upright position when the vehicle is moving. A seat belt cannot provide proper protection if the person is lying down in the rear seat or if the front and rear seats are in a reclined position.

⚠ WARNING

Riding with a reclined seatback increases your chance of serious or fatal injuries in the event of a collision or sudden stop. The protection of your restraint system (seat belts and air bags) is greatly reduced by reclining your seat. Seat belts must be secured against your hips and chest to work properly. The more the seatback is reclined, the greater the chance an occupant's hips will slide under the lap belt causing serious internal injuries. Also, the shoulder belt may strike the occupant's

(Continued)

(Continued)

neck. Drivers and passengers should always sit well back in their seats, properly belted, and with the seatbacks upright.

Care of seat belts

Seat belt systems should never be disassembled or modified. In addition, care should be taken to assure that seat belts and belt hardware are not damaged by seat hinges, doors or other abuse.

⚠ WARNING

When you return the rear seatback to its upright position after the rear seatback has been folded down, be careful not to damage the seat belt webbing or buckle. Be sure that the webbing or buckle does not get caught or pinched in the rear seat. A seat belt with damaged webbing or buckle could possibly fail during a collision or sudden stop, resulting in serious injury. If the webbing or buckles are damaged, get them replaced immediately.

Periodic inspection

All seat belts should be inspected periodically for wear or damage of any kind. Any damaged parts should be replaced as soon as possible.

Keep belts clean and dry

Seat belts should be kept clean and dry. If belts become dirty, they can be cleaned by using a mild soap solution and warm water. Bleach, dye, strong detergents or abrasives should not be used because they may damage and weaken the fabric.

When to replace seat belts

Entire in-use seat belt assembly or assemblies should be replaced if the vehicle has been involved in an accident. This should be done even if no damage is visible. In this case, have the system replaced by a professional workshop. Kia recommends to consult an authorized Kia dealer/service partner.

CHILD RESTRAINT SYSTEM (CRS)

Our recommendation: Children always in the rear

⚠ WARNING

Always properly restrain children in the vehicle. Children of all ages are safer when riding in the rear seats. Never place a rearward-facing Child Restraint System on the front passenger seat, unless the air bag is deactivated.

Children under age 13 should always ride in the rear seats and must always be properly restrained to minimize the risk of injury in an accident, sudden stop or sudden maneuver.
According to accident statistics, children are safer when properly restrained in the rear seats than in the front seat. Children too large for a Child Restraint System must use the seat belts provided.
Most countries have regulations which require children to travel in approved Child Restraint Systems.

The laws governing the age or height/weight restrictions at which seat belts can be used instead of Child Restraint System differs among countries, so you should be aware of the specific requirements in your country, and where you are travelling.
Child Restraint Systems must be properly installed in the vehicle seat. Always use a commercially available Child Restraint System that meets the requirements of your country.

Child Restraint System (CRS)

Infants and younger children must be restrained in an appropriate rearward-facing or forward-facing CRS that has first been properly secured to the seat of the vehicle. Read and comply with the instructions for installation and use provided by the manufacturer of the Child Restraint System.

⚠ WARNING

- **Always follow the Child Restraint System manufacturer's instructions for installation and use.**

(Continued)

(Continued)

- **Always properly restrain your child in the Child Restraint System.**
- **Do not use an infant carrier or a child safety seat that "hooks" over a seatback, it may not provide adequate protection in an accident.**
- **After an accident, have the system checked by a professional workshop. Kia recommends to visit an authorized Kia dealer/service partner.**

Selecting a Child Restraint System (CRS)

When selecting a Child Restraint System for your child, always:

- Make sure the Child Restraint System has a label certifying that it meets applicable Safety Standards of your country.
  A Child Restraint System may only be installed if it was approved in accordance with the requirements of ECE-R44 or ECE-R129.

- Select a Child Restraint System based on your child's height and weight. The required label or the instructions for use typically provide this information.
- Select a Child Restraint System that fits the vehicle seating position where it will be used.
  For the suitability of Child Restraint Systems on the vehicle's seating positions, please refer to the installation tables on page 4-40 to 4-43.
- Read and comply with the warnings and instructions for installation and use provided with the Child Restraint System.

Child Restraint System types

There are three main types of Child Restraint Systems: rearward-facing, forward-facing and booster Child Restraint Systems.
They are classified according to the child's age, height and weight.

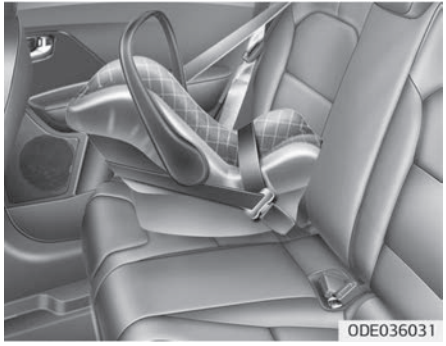
ODE036031

Rearward-facing Child Restraint System

A rearward-facing Child Restraint System provides restraint with the seating surface against the back of the child. The harness system holds the child in place, and in an accident, acts to keep the child positioned in the Child Restraint Systems and reduce the stress to the fragile neck and spinal cord.

All children under the age of one year must always ride in a rearward-facing Child Restraint System. There are different types of rearward-facing Child Restraint Systems: infant-only Child Restraint Systems can only be used rearward-facing. Convertible and 3-in-1 Child Restraint Systems typically have higher height and weight limits for the rearward-facing position, allowing you to keep your child rearward-facing for a longer period of time.
Keep using Child Restraint Systems in the rearward-facing position as long as children fit within the height and weight limits allowed by the Child Restraint System's manufacturer.

ODE026007

Forward-facing Child Restraint System

A forward-facing Child Restraint System provides restraint for the child's body with a harness. Keep children in a forward-facing Child Restraint System with a harness until they reach the top height or weight limit allowed by your Child Restraint System's manufacturer.
Once your child outgrows the forward-facing Child Restraint System, your child is ready for a booster seat.

Booster seats

A booster seat is a Child Restraint System designed to improve the fit of the vehicle's seat belt system. A booster seat positions the seat belt so that it fits properly over the stronger parts of your child's body. Keep your children in booster seats until they are big enough to fit in a seat belt properly.
For a seat belt to fit properly, the lap belt must lie comfortable across the upper thighs, not the stomach. The shoulder belt should lie comfortable across the shoulder and chest and not across the neck or face. Children under age 13 must always be properly restrained to minimize the risk of injury in an accident, sudden stop or sudden maneuver.

Installing a Child Restraint System (CRS)

⚠ WARNING

Before installing your Child Restraint System always:
Read and follow the instructions provided by the manufacturer of the Child Restraint System.
Failure to follow all warnings and instructions could increase the risk of the SERIOUS INJURY or DEATH if an accident occurs.

⚠ WARNING

If the vehicle headrest prevents proper installation of a Child Restraint System, the headrest of the respective seating position shall be readjusted or entirely removed.

After selecting a proper Child Restraint System for your child and checking that the Child Restraint System fits properly on the seating position, there are three general steps for a proper installation:

- **Properly secure the Child Restraint System to the vehicle.** All Child Restraint Systems must be secured to the vehicle with the lap belt or lap part of a lap/shoulder belt or with the ISOFIX toptether and/or ISOFIX anchorage and/or with the support leg.
- **Make sure the Child Restraint System is firmly secured.** After installing a Child Restraint System to the vehicle, push and pull the seat forward and from side-to-side to verify that it is securely attached to the seat. A Child Restraint System secured with a seat belt should be installed as firmly as possible. However, some side-toside movement can be expected. When installing a Child Restraint System, adjust the vehicle seat and seatback (up and down, forward and rearward) so that your child fits in the Child Restraint System in a confortable manner.
- **Secure the child in the Child Restraint System.** Make sure the child is properly strapped in the Child Restraint System according to the Child Restraint System manufacturer's instructions.

⚠ CAUTION

A Child Restraint System in a closed vehicle can become very hot. To prevent burns, check the seating surface and buckles before placing your child in the Child Restraint System.

ISOFIX anchorage and toptether anchorage (ISOFIX anchorage system) for children

The ISOFIX system holds a Child Restraint System during driving and in an accident. This system is designed to make installation of the Child Restraint System easier and reduce the possibility of improperly installing your Child Restraint System. The ISOFIX system uses anchors in the vehicle and attachments on the Child Restraint System. The ISOFIX system eliminates the need to use seat belts to secure the Child Restraint System to the rear seats.

ISOFIX anchorages are metal bars built into the vehicle. There are two lower anchors for each ISOFIX seating position that will accommodate a Child Restraint System with lower attachments.

To use the ISOFIX system in your vehicle, you must have a Child Restraint System with ISOFIX attachments.

The Child Restraint System manufacturer will provide you with instructions on how to use the Child Restraint System with its attachments for the ISOFIX anchorages.

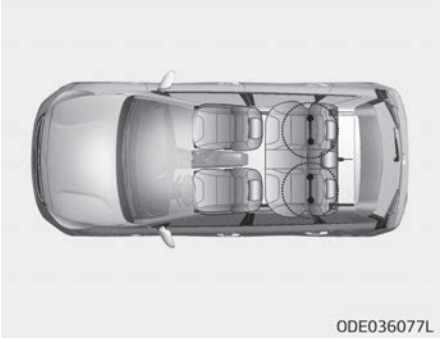

ISOFIX anchorages have been provided in the left and right outboard rear seating positions. Their locations are shown in the illustration.

⚠ WARNING

Do not attempt to install a Child Restraint System using ISOFIX anchorages in the rear center seating position. There are no ISOFIX anchorages provided for this seat. Using the outboard seat anchorages, for the CRS installation on the rear center seating position, can damage the anchorages.

■ Type A

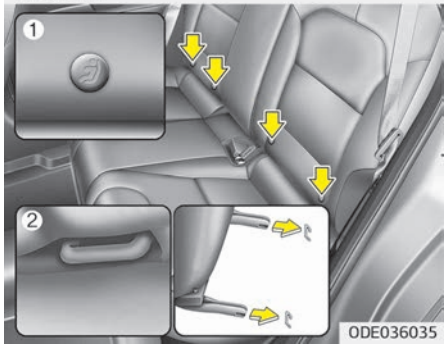

■ Type B

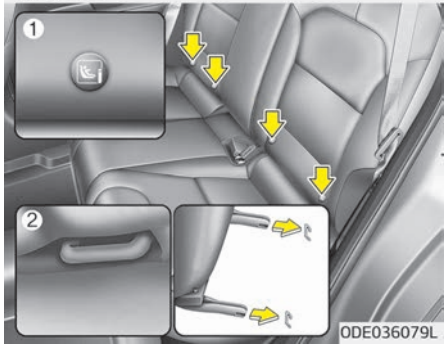

ISOFIX anchorages are located between the seatback and the seat cushion of the rear seat left and right outboard seating positions, indicated by the symbols.

❊ (1) : ISOFIX Anchor Position Indicator (Type A-, Type B-)
(2) : ISOFIX Anchor

Securing a Child Restraint System with the "ISOFIX Anchorage System"

To install an i-Size or ISOFIX-compatible Child Restraint System in either of the rear outboard seating positions:

1. Move the seat belt buckle away from the ISOFIX anchorages.
2. Move any other objects away from the anchorages that could prevent a secure connection between the Child Restraint System and the ISOFIX anchorages.
3. Place the Child Restraint System on the vehicle seat, then attach the seat to the ISOFIX anchorages according to the instructions provided by the Child Restraint System manufacturer.
4. Follow the instructions of the Child Restraint System's manufacturer for proper installation and connection of the ISOFIX attachments on the Child Restraint System to the ISOFIX anchorages.

⚠ WARNING

Take the following precautions when using the ISOFIX system:

- **Read and follow all installation instructions provided with your Child Restraint System.**
- **To prevent the child from reaching and taking hold of unretracted seat belts, buckle all unused rear seat belts and retract the seat belt webbing behind the child. Children can be strangled if a shoulder belt becomes wrapped around their neck and the seat belt tightens.**
- **NEVER attach more than one Child Restraint System to a single anchorage. This could cause the anchor or attachment to come loose or break.**

(Continued)

(Continued)

- **Always have the ISOFIX system inspected by your dealer after an accident. An accident can damage the ISOFIX system and may not properly secure the Child Restraint System.**

Securing a Child Restraint System seat with "Top-tether Anchorage" system (if equipped)

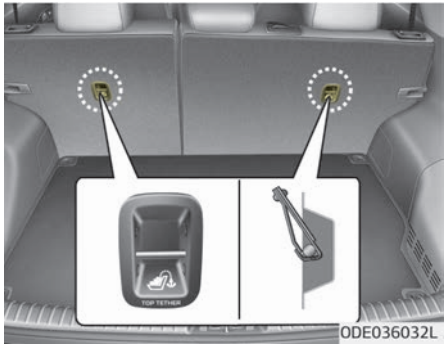

Child restraint system top tether anchorages are located on the back of the rear seatbacks.

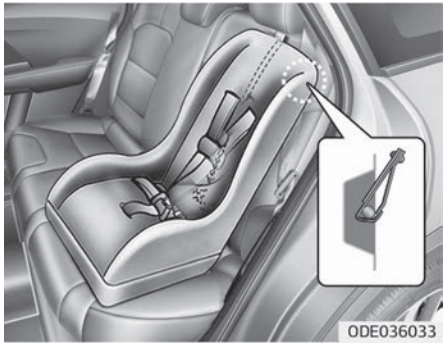

1. Route the Child Restraint System top-tether strap over the seatback. Placing the top tether strap, please follow the instructions of the Child Restraint System manufacturer.
2. Connect the top-tether strap to the top-tether anchorage, then tighten the top-tether strap according to the instructions of your Child Restraint System's manufacturer to firmly attach the Child Restraint System to the seat.

⚠ WARNING

Take the following precautions when installing the top-tether:

- **Read and follow all installation instructions provided with your Child Restraint System.**
- **NEVER attach more than one Child Restraint System to a single ISOFIX top-tether anchorage. This could cause the anchorage or attachment to come loose or break.**
- **Do not attach the top-tether to anything other than the correct top-tether anchorage. It may not work properly if attached to something else.**
- **Child Restraint System anchorages are designed to withstand only those loads imposed by correctly fitted Child Restraint System.**
  Under no circumstances are they to be used for adult seat belts or harnesses or for attaching other items or equipment to the vehicle.

Securing a Child Restraint System with a lap/shoulder belt

When not using the ISOFIX system, all Child Restraint Systems must be secured to a rear seat with the lap part of a lap/shoulder belt.

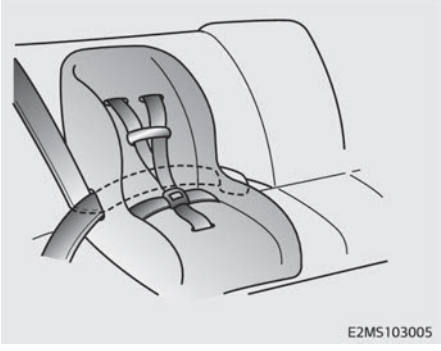

Installing a Child Restraint System with a lap/shoulder belt

To install a Child Restraint System on the rear seats, do the following:

1. Place the Child Restraint System on a rear seat and route the lap/shoulder belt around or through the Child Restraint System, following the Child Restraint System manufacturer's instructions.
   Make sure the seat belt webbing is not twisted.

2. Fasten the lap/shoulder belt latch into the buckle. Listen for the distinct "click" sound. Position the release button so that it is easy to access in case of an emergency.

3. Remove as much slack from the belt as possible by pushing down on the Child Restraint System while feeding the shoulder belt back into the retractor.
4. Push and pull on the Child Restraint System to confirm that the seat belt is holding it firmly in place.

If your Child Restraint System manufacturer recommends the use of a top-tether with the lap/shoulder belt, see "Securing a Child Restraint System with the "ISOFIX Anchorage System"" on page 4-37.
To remove the Child Restraint System, press the release button on the buckle and then pull the lap/shoulder belt out of the Child Restraint System and allow the seat belt to retract fully.

Suitability of each seating position for belted & ISOFIX Child Restraint Systems (CRS) according to UN regulations

(Information for use by vehicle users and CRS manufacturers)

- Yes : Suitable for fitment of the designated category of CRS
- No : Not suitable for fitment of the designated category of CRS
- "–" : Not applicable
- The table is based on LHD vehicle. Except for the front passenger seat, the table is valid for RHD vehicle.
  For RHD vehicle front passenger seat, please use information for the seating position number 3.

CRS categories		Seating positions						
		1	2	3	4	5	6	
Universal belted CRS		-	-	Yes[1] (F, R)	Yes (F, R)	Yes (F, R)	Yes (F, R)	F : Forward facing R : Rearward facing
i-size CRS	ISOFIX CRF : F2, F2X, R1, R2	-	-	No	Yes (F, R)	No	Yes (F, R)	
Carry-cot (ISOFIX lateral facing CRS)	ISOFIX CRF: L1, L2	-	-	No	No	No	No	
ISOFIX infant* CRS (* : ISOFIX baby CRS)	ISOFIX CRF : R1	-	-	No	Yes (R)	No	Yes (R)	
ISOFIX toddler CRS - small	ISOFIX CRF : F2,F2X, R2,R2X	-	-	No	Yes (F, R)	No	Yes (F, R)	
ISOFIX toddler CRS – large* (* : not booster seats)	ISOFIX CRF : F3, R3	-	-	No	Yes (F, R)	No	Yes (F, R)	
Booster Seat – reduced Width	ISO CRF : B2	-	-	No	Yes	No	Yes	
Booster Seat – full Width	ISO CRF : B3	-	-	No	Yes	No	Yes	

Note[1] : For fitment of universal belted Child Restraint Systems on the seat number 3, Seat back angle should be at its fully forward position.

❇ Never place a rearward facing Child Restraint System on the front passenger seat, unless the air bag is deactivated.

❇ For semi-universal or vehicle specific CRS (ISOFIX or belted CRS), please see the vehicle list provided in the manual of CRS.

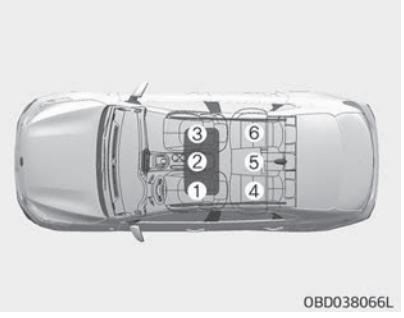

Seat number	Position in the vehicle
1	Front left
2	Front center
3	Front right
4	2nd row left
5	2nd row center
6	2nd row right

Recommended child restraint systems – For Europe

Mass group	Name	Manufacturer	Type of fixation	ECE-R44 Approval No.
Group 0+	Cabriofix & Familyfix	Maxi Cosi	Rearward-facing with ISOFIX	E4 04443907
Group I	Duo Plus	Britax Römer	Forward-facing with ISOFIX and top-tether	E1 04301133
Group II	KidFix II XP	Britax Römer	Forward-facing with ISOFIX and vehicle belt	E1 04301323
Group III	Junior III	Graco	Forward-facing with vehicle Belt	E11 03.44.164 E11 03.44.165

❋ The Graco Junior III will be used without the backrest.

CRS Manufacturer information

Maxi Cosi Cabriofix & Familyfix – http://www.maxi-cosi.com

Britax Römer – http://www.britax.com

Graco – http://www.gracobaby.com

AIR BAG - SUPPLEMENTAL RESTRAINT SYSTEM (IF EQUIPPED)

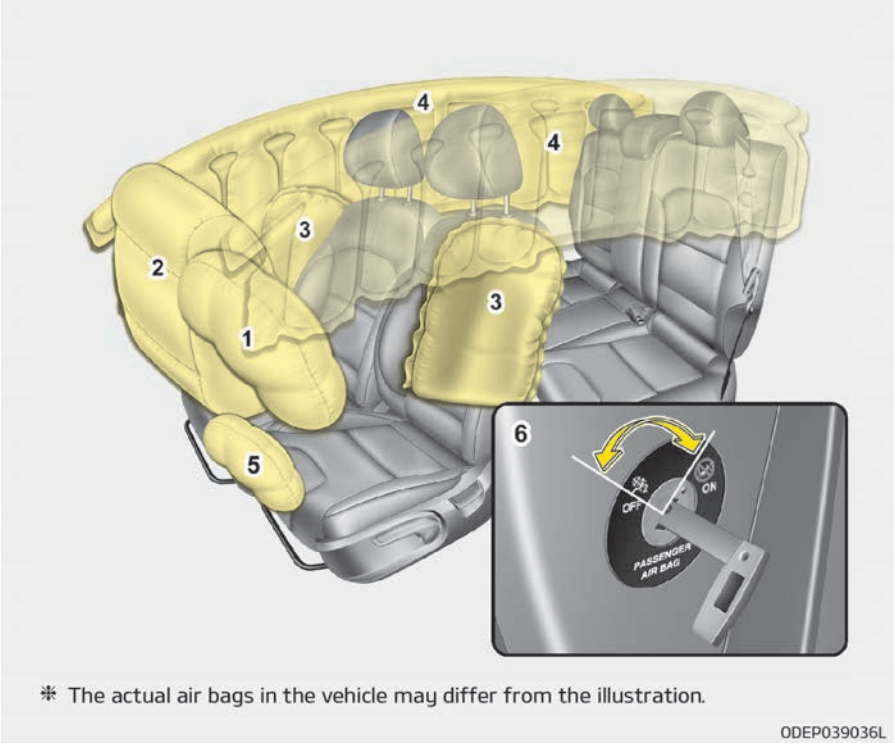

❋ The actual air bags in the vehicle may differ from the illustration.

1. Driver's front air bag
2. Passenger's front air bag
3. Side air bag*
4. Curtain air bag*
5. Driver's knee air bag*
6. Passenger's front air bag ON/OFF switch*

⚠ WARNING

- **Even in vehicles with air bags, you and your passengers must always wear the safety belts provided in order to minimize the risk and severity of injury in the event of a collision or rollover.**

(Continued)

*: if equipped

(Continued)

- **SRS and pre-tensioners contain explosive chemicals.**
  If scraping a vehicle without removing SRS and pre-tensioners from a vehicle, it may cause fire. Before scraping a vehicle, contact a professional workshop. Kia recommends to visit an authorized Kia dealer/ service partner.
- **Keep the SRS parts and wirings away from water or any liquid. If the SRS components are inoperative due to exposure to water or liquids, it may cause fire or severe injury.**

How does the air bag system operate

- Air bags are activated (able to inflate if necessary) only when the ignition switch is turned to the ON or START position.
- Air bags inflate instantly in the event of a serious frontal collision or side collision (if equipped with a side air bag or curtain air bag) in order to help protect the occupants from serious physical injury.
- In normal conditions, the airbag is designed to deploy based on certain angle and intensity of the collision. These two factors are crucial elements for deciding whether to transmit airbag deployment signal or start the electrical operation or not.
- The airbag will deploy based on angle and intensity of the collision. It will not deploy in every crash or collision situations.
- The front air bags will completely inflate and deflate in an instant.
  It is virtually impossible for you to see the air bags inflate during an accident.
  It is much more likely that you will simply see the deflated air bags hanging out of their storage compartments after the collision.
- In order to help provide protection in a severe collision, the air bags must inflate rapidly. The speed of the air bag inflation is a consequence of extremely short time in which a collision occurs and the need to inflate the air bag between the occupant and the vehicle structures before the occupant impacts those structures.
  This speed of inflation reduces the risk of serious or life-threatening injuries in a severe collision and is thus a necessary part of the air bag design.
  However, air bag inflation can also cause injuries which can include facial abrasions, bruises and broken bones because the inflation speed also causes the air bags to expand with a great deal of force.
- **There are even circumstances under which contact with the steering wheel air bag can cause fatal injuries, especially if the occupant is positioned excessively close to the steering wheel.**

⚠ WARNING

- **To avoid severe personal injury or death caused by deploying air bags in a collision, the driver should sit as far back from the steering wheel air bag as possible (at least 250 mm (10 inches) away). The front passengers should always move their seats as far back as possible and sit back in their seat.**
- **Air bags inflate instantly in the event of a collision, and passengers may be injured by the air bag expansion force if they are not in a proper position.**
- **Air bag inflation may cause injuries including facial or bodily abrasions, injuries from broken glasses or burns.**

Noise and smoke

When the air bags inflate, they make a loud noise and they leave smoke and powder in the air inside of the vehicle. This is normal and is a result of the ignition of the air bag inflator. After the air bag inflates, you may feel substantial discomfort in breathing due to the contact of your chest with both the seat belt and the air bag, as well as from breathing the smoke and powder. Open your doors and/or windows as soon as possible after the impact in order to reduce discomfort and prevent prolonged exposure to smoke and powder.

Though the smoke and powder are non-toxic, they may cause irritation to the skin (eyes, nose and throat, etc). If this is the case, wash and rinse with cold water immediately and consult a doctor if the symptom persists.

⚠ WARNING

When the air bags deploy, the air bag related parts in the steering wheel, instrument panel, front seats and/or in both sides of the roof rails

(Continued)

(Continued)

above the front and rear doors are very hot. To prevent injury, do not touch the air bag storage area's internal components immediately after an air bag has inflated.

Front passenger's air bag warning label for child restraint system

■ Type A

OYDESA2042

■ Type B

OHM036053L

⚠ WARNING

Never place a rear facing child restraint in the front passenger seat, unless the passenger-side air bag is deactivated. An inflating passenger-side air bag could impact the rear-facing child restraint and kill the child.

In addition, we recommend that you do not place front-facing child restraints in the front passenger's seat either. If the front passenger air bag inflates, it could cause serious or fatal injuries to the child.
If your vehicle is equipped with the passenger's front air bag ON/OFF switch, you can activate or deactivate the front passenger's air bag when necessary.
For more details, please refer to "Passenger's front air bag ON/OFF switch (if equipped)" on page 4-55 .

⚠ WARNING

- **NEVER use a rearward facing child restraint on a seat protected by an ACTIVE AIR BAG in front of it. DEATH or SERIOUS INJURY to the CHILD can occur.**
- **When children are seated in the rear outboard seats of a vehicle equipped with side and/or curtain air bags, be sure to install the child restraint system as far away from the door side as possible, and securely lock the child restraint system in position.**
  Inflation of side and/or curtain air bags could cause serious injury or death to an infant or child.

Air bag warning light

The purpose of the air bag warning light in your instrument panel is to alert you of a potential problem with your air bag - Supplemental Restraint System (SRS).
When the ignition switch is turned ON, the warning light should illuminate for approximately 6 seconds, then go off.
Have the system checked if:

- The light does not turn on briefly when you turn the ignition ON.
- The light stays on after illuminating for approximately 6 seconds.
- The light comes on while the vehicle is in motion.
- The light blinks when the ignition switch is in ON position.

Passenger's front air bag ON indicator (if equipped)

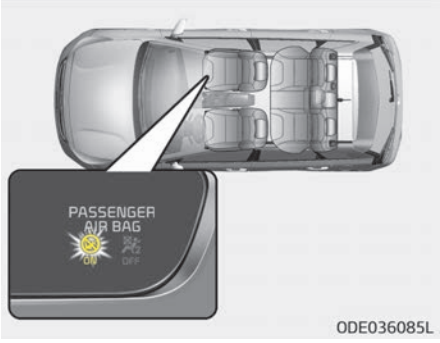

The passenger's front air bag ON indicator illuminates for approximately 4 seconds after the ignition switch is turned to the ON position.

The passenger's front air bag ON indicator also comes on when the passenger's front air bag ON/OFF switch is set to the ON position and goes off after approximately 60 seconds.

Passenger's front air bag OFF indicator (if equipped)

The passenger's front air bag OFF indicator illuminates for about 4 seconds after the ignition switch is turned to the ON position.

The passenger's front air bag OFF indicator also comes on when the passenger's front air bag ON/OFF switch is set to the OFF position and goes off when the passenger's front air bag ON/OFF switch is set to the ON position.

⚠ CAUTION

If the passenger's front air bag ON/OFF switch malfunctions, the passenger's front air bag OFF indicator will not illuminate (The passenger's front air bag ON indicator comes on and goes off after approximately 60 seconds) and the passenger's front air bag will inflate in a frontal impact even if the passenger's front air bag ON/OFF switch is set to the OFF position.
In this case, have the passenger's front air bag ON/OFF switch and the SRS air bag system inspected by a professional workshop. Kia recommends to visit an authorized Kia dealer/service partner.

SRS components and functions

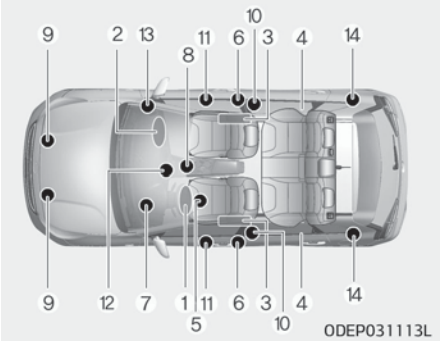

The SRS consists of the following components:

1. Driver's front air bag module
2. Passenger's front air bag module
3. Side air bag modules*
4. Curtain air bag modules*
5. Driver's knee air bag
6. Retractor pre-tensioner assemblies
7. Air bag warning light
8. SRS control module (SRSCM)
9. Front impact sensors
10. Side impact sensors*
11. Side pressure sensors*
12. Passenger's front air bag ON/OFF indicator (front passenger's seat only)
13. Passenger's front air bag ON/OFF switch*
14. Retractor pre-tensioner assemblies*

The SRSCM continually monitors all SRS components while the ignition switch is ON to determine if a crash impact is severe enough to require air bag deployment or pre-tensioner seat belt deployment.
The SRS air bag warning light on the instrument panel will illuminate for about 6 seconds after the ignition switch is turned to the ON position, after which the SRS air bag warning light should go out.

*: if equipped

*: if equipped

⚠ WARNING

If any of the following conditions occurs, this indicates a malfunction of the SRS. In this case, have the system inspected by a professional workshop. Kia recommends to visit an authorized Kia dealer/service partner.

- **The light does not turn on briefly when you turn the ignition ON.**
- **The light stays on after illuminating for approximately 6 seconds.**
- **The light comes on while the vehicle is in motion.**
- **The light blinks when the ignition switch is in ON position.**

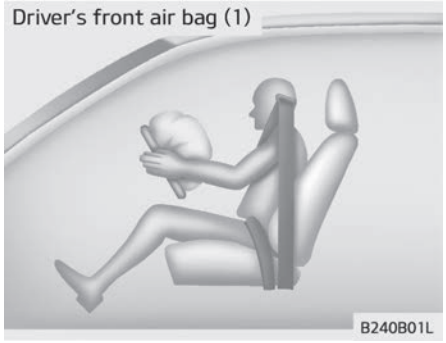

The front air bag modules are located both in the center of the steering wheel and in the front passenger's panel above the glove box. When the SRSCM detects a sufficiently severe impact to the front of the vehicle, it will automatically deploy the front air bags.

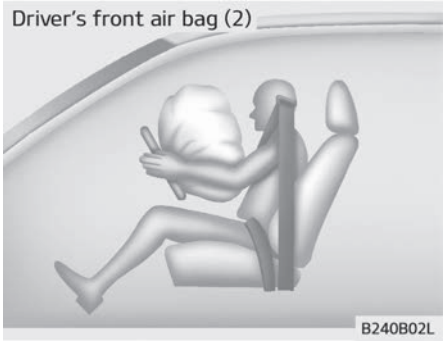

Upon deployment, tear seams molded directly into the pad covers will separate under pressure from the expansion of the air bags. Further opening of the covers then allows full inflation of the air bags.

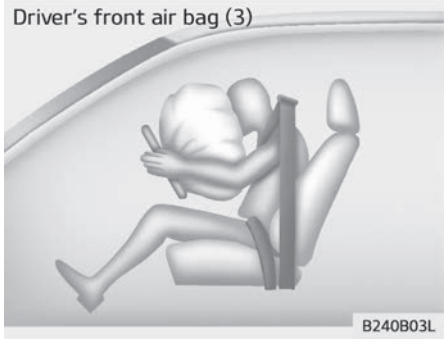

A fully inflated air bag, in combination with a properly worn seat belt, slows the driver's or the passenger's forward motion, reducing the risk of head and chest injury.
After complete inflation, the air bag immediately starts deflating, enabling the driver to maintain forward visibility and the ability to steer or operate other controls.

⚠ WARNING

- **Do not install or place any accessories (drink holder, sticker, etc.) on the front passenger's panel above the glove box in a vehicle with a passenger's air bag. Such objects may become dangerous projectiles and cause injury if the passenger's air bag inflates.**

(Continued)

(Continued)

- **When installing a container of liquid air freshener inside the vehicle, do not place it near the instrument cluster nor on the instrument panel surface.**
  It may become a dangerous projectile and cause injury if the passenger's air bag inflates.

⚠ WARNING

- **If an air bag deploys, there may be a loud noise followed by a fine dust released in the vehicle. These conditions are normal and are not hazardous – the air bags are packed in this fine powder. The dust generated during air bag deployment may cause skin or eye irritation as well as aggravate asthma for some persons. Always wash all exposed skin areas thoroughly with cold water and mild soap after an accident in which the air bags were deployed.**

(Continued)

(Continued)

- **The SRS can function only when the ignition key is in the ON position. If the SRS air bag warning light does not illuminate, or continuously remains on after illuminating for about 6 seconds when the ignition key is turned to the ON position, or after the engine is started, comes on while driving, the SRS is not working properly. In this case, have the system inspected by a professional workshop. Kia recommends to visit an authorized Kia dealer/service partner.**
- **Before you replace a fuse or disconnect a battery terminal, turn the ignition switch to the LOCK position and remove the ignition key. Never remove or replace the air bag related fuse(s) when the ignition switch is in the ON position. Failure to heed this warning will cause the SRS air bag warning light to illuminate.**

Driver's and passenger's front air bag

■ Driver's front air bag

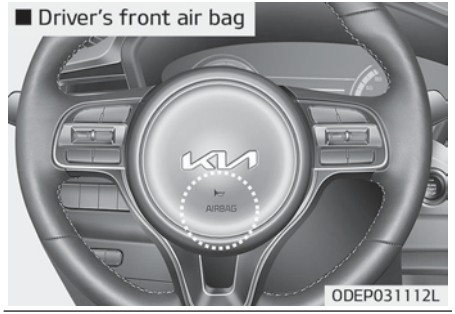

■ Driver's knee air bag (if equipped)

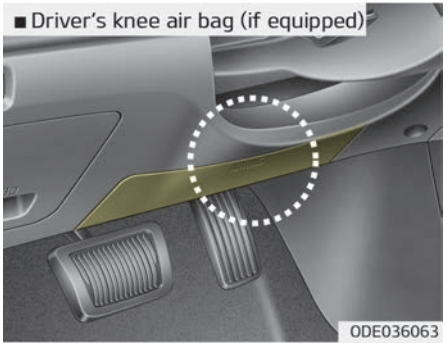

■ Passenger's front air bag

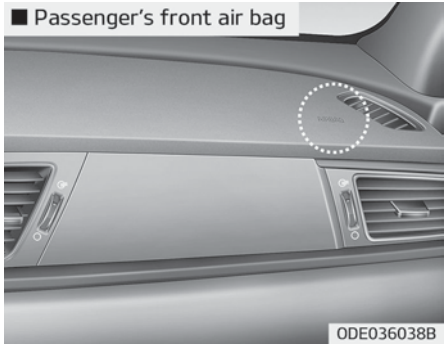

Your vehicle is equipped with a Supplemental Restraint (Air Bag) System and lap/shoulder belts at both the driver and passenger seating positions.
The indicators of the system's presence are the letters "AIR BAG" located on the air bag pad cover on the steering wheel and the passenger's side front panel pad above the glove box.
The SRS consists of air bags installed under the pad covers in the center of the steering wheel and the passenger's side in the front panel above the glove box.

The purpose of the SRS is to provide the vehicle's driver and/or the front passenger with additional protection than that offered by the seat belt system alone in case of a frontal impact of sufficient severity.

⚠ WARNING

Always use seat belts and child restraints – every trip, every time, everyone! Air bags inflate with considerable force and in the blink of an eye. Seat belts help keep occupants in proper position to obtain maximum benefit from the air bag. Even with air bags, improperly and unbelted occupants can be severely injured when the air bag inflates. Always follow the precautions about seat belts, air bags and occupant safety contained in this manual.
To reduce the chance of serious or fatal injuries and receive the maximum safety benefit from your restraint system:
(Continued)

(Continued)

- **ABC – We recommend to always Buckle Children in the 2nd row seat. It is the safest place for children of any age to ride.**
- **Front and side air bags can injure occupants improperly positioned in the front seats.**
- **Move your seat as far back as practical from the front air bags, while still maintaining control of the vehicle.**
- **You and your passengers should never sit or lean unnecessarily close to the air bags. Improperly positioned drivers and passengers can be severely injured by inflating air bags.**
- **Never lean against the door or center console – always sit in an upright position.**

(Continued)

(Continued)

- **Do not allow a passenger to ride in the front seat when the passenger's front air bag OFF indicator is illuminated, because the air bag will not deploy in the event of a moderate or severe frontal crash.**
- **No objects should be placed over or near the air bag modules on the steering wheel, instrument panel or the front passenger's panel above the glove box, because any such object could cause harm if the vehicle is in a crash severe enough to cause the air bags to deploy.**
- **Do not tamper with or disconnect SRS wiring or other components of the SRS system. Doing so could result in injury, due to accidental deployment of the air bags or by rendering the SRS inoperative.**

(Continued)

(Continued)

- **If the SRS air bag warning light remains illuminated while the vehicle is being driven, have the system inspected by a professional workshop. Kia recommends to visit an authorized Kia dealer/service partner.**
- **Air bags can only be used once – have the system replaced by a professional workshop. Kia recommends to visit an authorized Kia dealer/service partner.**
- **The SRS is designed to deploy the front air bags when an impact is sufficiently severe. Additionally, the air bags will only deploy once. Seat belts must be worn at all times.**

(Continued)

(Continued)

- **Front air bags are not intended to deploy in side-impact, rear-impact or rollover crashes. However, when frontal deployment threshold is satisfied at side-impact, front air bags may deploy.**
  In addition, front air bags will not deploy in frontal crashes below the deployment threshold.
- **A child restraint system must never be placed in the front seat. The infant or child could be severely injured or killed by an air bag deployment in case of an accident.**
- **Children age 13 and under must always be properly restrained in the rear seat. If a child over 13 must be seated in the front seat, he or she must be properly belted and the seat should be moved as far back as possible.**

(Continued)

(Continued)

- **For maximum safety protection in all types of crashes, all occupants including the driver should always wear their seat belts whether or not an air bag is also provided at their seating position to minimize the risk of severe injury or death in the event of a crash.**
  Do not sit or lean unnecessarily close to the air bag while the vehicle is in motion.
- **Sitting improperly or out of position can result in serious or fatal injury in a crash. All occupants should sit upright with the seat back in an upright position, centered on the seat cushion with their seat belt on, legs comfortably extended and their feet on the floor until the vehicle is parked and the ignition key is removed.**

(Continued)

(Continued)

- **The SRS air bag system must deploy very rapidly to provide protection in a crash. If an occupant is out of position because of not wearing a seat belt, the air bag may forcefully contact the occupant causing serious or fatal injuries.**

Passenger's front air bag ON/OFF switch (if equipped)

The passenger's front air bag can be deactivated by the passenger's front air bag ON/OFF switch if a child restraint is installed on the front passenger's seat or if the front passenger's seat is unoccupied by a person.
To ensure the safety of your child, the passenger's front air bag must be deactivated when it should be necessary to install a rearward facing child seat on the front passenger seat in exceptional circumstances.

To deactivate or reactivate the passenger's front air bag:

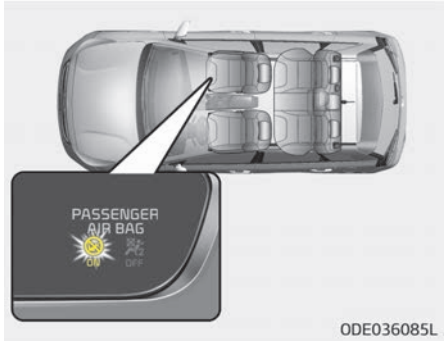

ODE036085L

ODE036086L

To deactivate the passenger's front air bag, insert the master key into the passenger's front air bag ON/OFF switch and turn it to the OFF position.
The passenger's front air bag OFF indicator will illuminate and stay on until the passenger's front air bag is reactivated.
To reactivate the passenger's front air bag, insert the master key into the passenger's front air bag ON/OFF switch and turn it to the ON position.
The passenger's front air bag OFF indicator will go out.

⚠ WARNING

The front air bag ON/OFF switch could turn by using a similar small rigid device. Always check the status of the front air bag ON/OFF switch and passenger's front air bag OFF indicator.

✻ NOTICE

- When the passenger's front air bag ON/OFF switch is set to the ON position, the passenger's front air bag is activated and child or infant seat should not be installed on the front passenger seat.
- When the passenger's front air bag ON/OFF switch is set to the OFF position, the passenger's front air bag is deactivated.

⚠ CAUTION

- If the passenger's front air bag ON/OFF switch is not working properly, the air bag warning light ( )on the instrument panel will illuminate.
  And, the passenger's front air bag OFF indicator ( ) will not illuminate (The passenger's front air bag ON indicator comes on and goes off after approximately 60 seconds), the SRS Control Module reactivates the passenger's front air bag and the passenger's front air bag will inflate in frontal impact crashes even if the passenger's front air bag ON/OFF switch is set to the OFF position.
  In this case, have the system inspected by a professional workshop. Kia recommends to visit an authorized Kia dealer/service partner.

(Continued)

(Continued)

- If the SRS air bag warning light blinks or does not illuminate when the ignition switch is turned to the ON position, or if it illuminates while the vehicle is being driven, have the system inspected by a professional workshop. Kia recommends to visit an authorized Kia dealer/service partner.

⚠ WARNING

- The driver is responsible for the proper position of the passenger's front air bag ON/OFF switch.
- Deactivate the passenger's front air bag only when the ignition switch is switched off, or the malfunction may occur in the SRS Control Module.
  And there may be a danger that the driver's and/or front passenger's and/or side and curtain air bag may fail to trigger, or not trigger correctly during a collision.

(Continued)

(Continued)

- Never install a rearward facing child seat on the front passenger's seat unless the passenger's front air bag has been deactivated. The infant or child could be severely injured or killed by an air bag deployment in case of an accident.
- Children who are too large for child restraint systems should always occupy the rear seat and use the available lap/shoulder belts. Children are afforded the most safety in the event of an accident when they are restrained by a proper restraint system in the rear seat.
- As soon as the child seat is no longer needed on the front passenger's seat, reactivate the front passenger's air bag.

⚠ WARNING

■ No attaching objects

(Continued)

(Continued)

No objects (such as crash pad cover, cellular phone holder, cup holder, perfume or stickers) should be placed over or near the air bag modules on the steering wheel, instrument panel, windshield glass, and the front passenger's panel above the glove box. Such objects could cause harm if the vehicle is in a crash severe enough to cause the air bags to deploy. Do not place any objects over the air bag or between the air bag and yourself.

Side air bag (if equipped)

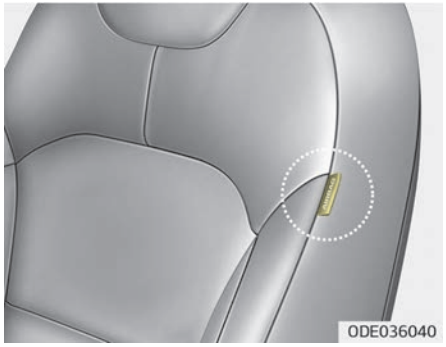

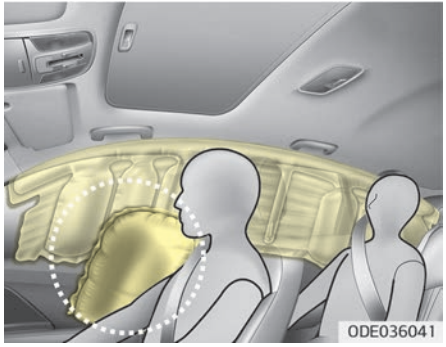

❊ The actual air bags in the vehicle may differ from the illustration.

Your vehicle is equipped with a side air bag in each front seat.
The purpose of the air bag is to provide the vehicle's driver and/or the front passenger with additional protection than that offered by the seat belt alone.
The side air bags are designed to deploy during certain side-impact collisions, depending on the crash severity of impact. However, when side deployment threshold is satisfied at front-impact, side air bags may deploy. The side air bags are not designed to deploy in all side impact situations.
The side air bags may deploy on the side of the impact.

⚠ WARNING

Do not allow the passengers to lean their heads or bodies onto doors, put their arms on the doors, stretch their arms out of the window, or place objects between the doors and passengers when they are seated on seats equipped with side and/or curtain air bags.

⚠ WARNING

- The side air bag is supplemental to the driver's and the passenger's seat belt systems and is not a substitute for them. Therefore your seat belts must be worn at all times while the vehicle is in motion. The air bags deploy only in certain side impact conditions severe enough to cause significant injury to the vehicle occupants.
- For best protection from the side air bag system and to avoid being injured by the deploying side air bag, both front seat occupants should sit in an upright position with the seat belt properly fastened. The driver's hands should be placed on the steering wheel at the 9:00 and 3:00 positions.
  The passenger's arms and hands should be placed on their laps.
- Do not use any accessory seat covers.

(Continued)

(Continued)

- Use of seat covers could reduce or prevent the effectiveness of the system.
- To prevent unexpected deployment of the side air bag that may result in personal injury, avoid impact to the side impact sensor when the ignition switch is on.
- If the seat or seat cover is damaged, have the system serviced by a professional workshop. Kia recommends to visit an authorized Kia dealer/service partner.

⚠ WARNING

■ **No attaching objects**

- Do not place any objects over the air bag or between the air bag and yourself. Also, do not attach any objects around the area the air bag inflates such as the door, side door glass, front and rear pillar.

(Continued)

(Continued)

- Do not place any objects between the door and the seat. They may become dangerous projectiles if the side air bag inflates.
- Do not install any accessories on the side or near the side air bags.

Curtain air bag (if equipped)

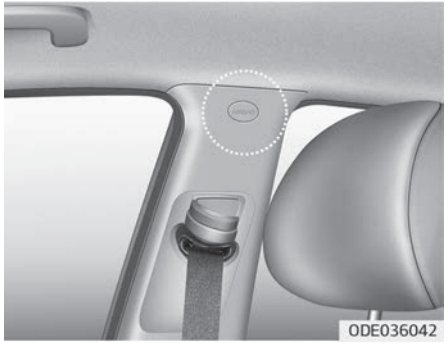

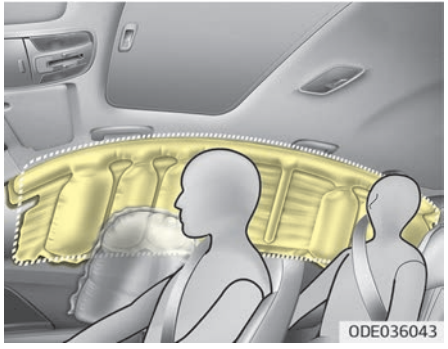

❊ The actual air bags in the vehicle may differ from the illustration.

Curtain air bags are located along both sides of the roof rails above the front and rear doors.
They are designed to help protect the heads of the front seat occupants and the rear outboard seat occupants in certain side impact collisions.
The curtain air bags are designed to deploy during certain side impact collisions, depending on the crash severity of impact. However, when side deployment threshold is satisfied at front-impact, curtain air bags may deploy.
The curtain air bags may deploy on the side of the impact.
The curtain air bags are not designed to deploy in all side impacts situations.

⚠ WARNING

- **In order for side and curtain air bags to provide the best protection, front seat occupants and outboard rear occupants should sit in an upright position with the seat belts properly fastened. Importantly, children should sit in a proper child restraint system in the rear seat.**

(Continued)

(Continued)

- **When children are seated in the rear outboard seats, they must be seated in the proper child restraint system. Make sure to position the child restraint system as far away from the door side as possible, and secure the child restraint system in a locked position.**
- **Do not allow the passengers to lean their heads or bodies against doors, put their arms on the doors, stretch their arms out of the window or place objects between the doors and passengers when they are seated on seats equipped with side and curtain air bags.**
- **Never try to open or repair any components of the side curtain air bag system. If necessary, have the system serviced by a professional workshop. Kia recommends to visit an authorized Kia dealer/service partner.**

Failure to follow the above instructions can result in injury or death to the vehicle occupants in an accident.

⚠ WARNING

■ **No attaching objects**

- **Do not place any objects over the air bag. Also, do not attach any objects around the area the air bag inflates such as the door, side door glass, front and rear pillar, roof side rail.**
- **Do not hang hard or breakable objects on the clothes hanger.**

Why didn't my air bag go off in a collision?

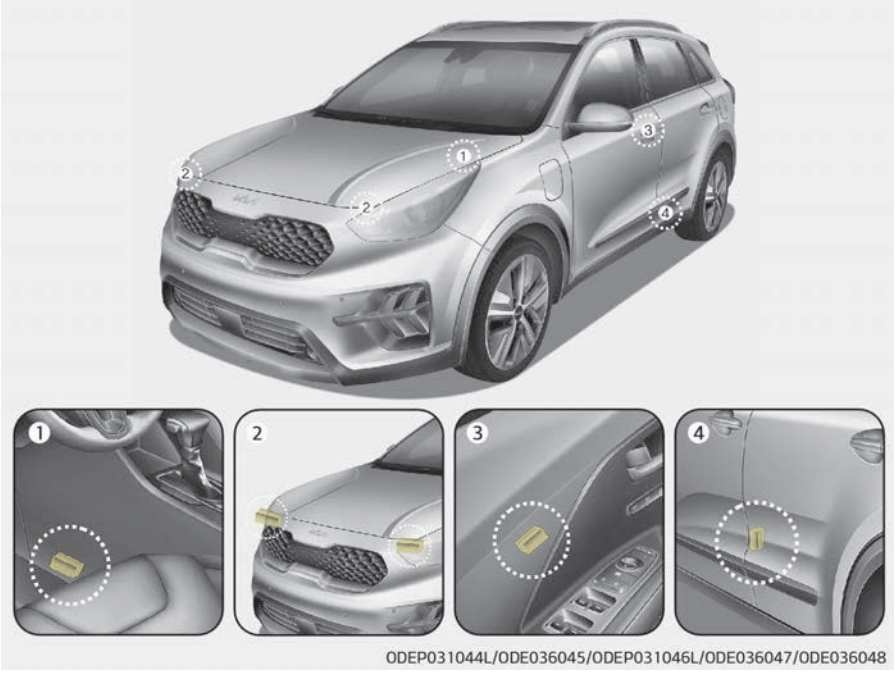

Inflation and non-inflation conditions of the air bag

There are many types of accidents in which the air bag would not be expected to provide additional protection.
These include rear impacts, second or third collisions in multiple impact accidents, as well as low speed impacts.

Air bag collision sensors

1. SRS control module
2. Front impact sensor
3. Side pressure sensor (if equipped)
4. Side impact sensor (if equipped)

❊ The actual air bag collision sensors in the vehicle may differ from the illustration.

⚠ WARNING

- **Do not hit or allow any objects to impact the locations where air bag or sensors are installed. This may cause unexpected air bag deployment, which could result in serious personal injury or death.**
- **If the installation location or angle of the sensors is altered in any way, the air bags may deploy when they should not or they may not deploy when they should, causing severe injury or death.**
  Therefore, do not try to perform maintenance on or around the air bag sensors. Have the system serviced by a professional workshop. Kia recommends to visit an authorized Kia dealer/service partner.

(Continued)

(Continued)

- **Problems may arise if the sensor installation angles are changed due to the deformation of the front bumper, body or front door and B/C pillars where side collision sensors are installed. In this case, have the system serviced by a professional workshop. Kia recommends to visit an authorized Kia dealer/service partner.**
- **Your vehicle has been designed to absorb impact and deploy the air bag(s) in certain collisions. Installing bumper guards or replacing a bumper with non-genuine parts may adversely affect your vehicles collision and air bag deployment performance.**

Air bag inflation conditions

Front air bags

Front air bags are designed to inflate in a frontal collision depending on the severity of impact of the front collision.

Side and curtain air bags (if equipped)

Side and curtain air bags are designed to inflate when an impact is detected by side collision sensors depending on the severity of impact resulting from a side impact collision.
Although the front air bags (driver's and front passenger's air bags) are designed to inflate only in frontal collisions, they also may inflate in other types of collisions if the front impact sensors detect a sufficient impact. Side air bags (side and/or curtain air bags) are designed to inflate only in side impact collisions, but they may inflate in other collisions if the side impact sensors detect a sufficient impact.
If the vehicle chassis is impacted by bumps or objects on unimproved roads or sidewalks, air bags may deploy. Drive carefully on unimproved roads or on surfaces not designed for vehicle traffic to prevent unintended air bag deployment.

Air bag non-inflation conditions

- In certain low-speed collisions the air bags may not deploy. The air bags are designed not to deploy in such cases because they may not provide benefits beyond the protection of the seat belts in such collisions.

- Air bags are not designed to inflate in rear collisions, because occupants are moved backward by the force of the impact. In this case, inflated air bags would not be able to provide any additional benefit.
- Front air bags may not inflate in side impact collisions, because occupants move to the direction of the collision, and thus in side impacts, front air bag deployment would not provide additional occupant protection.
- However, if equipped with side and curtain air bags, the air bags may inflate depending on the severity of impact.
- In an angled collision, the force of impact may direct the occupants in a direction where the air bags would not be able to provide any additional benefit, and thus the sensors may not deploy any air bags.
- Just before impact, drivers often brake heavily. Such heavy braking lowers the front portion of the vehicle causing it to “ride” under a vehicle with a higher ground clearance. Air bags may not inflate in this "under-ride" situation because deceleration forces that are detected by sensors may be significantly reduced by such “under-ride” collisions.
- Front air bags may not inflate in roll-over accidents because front air bag deployment would not provide additional occupant protection.
- Air bags may not inflate if the vehicle collides with objects such as utility poles or trees, where the point of impact is concentrated to one area and the full force of the impact is not delivered to the sensors.

SRS Care

The SRS is virtually maintenance-free and so there are no parts you can safely service by yourself. If the SRS air bag warning light does not illuminate, or continuously remains on, have the system inspected by a professional workshop. Kia recommends to visit an authorized Kia dealer/service partner.

⚠ WARNING

- **Modification to SRS components or wiring, including the addition of any kind of badges to the pad covers or modifications to the body structure, can adversely affect SRS performance and lead to possible injury.**
- **For cleaning the air bag pad covers, use only a soft, dry cloth or one which has been moistened with plain water. Solvents or cleaners could adversely affect the air bag covers and proper deployment of the system.**
- **No objects should be placed over or near the air bag modules on the steering wheel, instrument panel, and the front passenger's panel above the glove box, because any such object could cause harm if the vehicle is in a crash severe enough to cause the air bags to inflate.**

(Continued)

(Continued)

- **If the air bags inflate, have the system replaced by a professional workshop. Kia recommends to visit an authorized Kia dealer/service partner.**
- **Do not tamper with or disconnect SRS wiring, or other components of the SRS system. Doing so could result in injury, due to accidental inflation of the air bags or by rendering the SRS inoperative.**
- **If components of the air bag system must be discarded, or if the vehicle must be scrapped, certain safety precautions must be observed. An authorized Kia dealer knows these precautions and can give you the necessary information. Failure to follow these precautions and procedures could increase the risk of personal injury.**

(Continued)

(Continued)

- **If your car was flooded and has soaked carpeting or water on flooring, you shouldn't try to start the engine; in this case, have your vehicle inspected by a professional workshop. Kia recommends to contact an authorized Kia dealer/service partner.**

Additional safety precautions

- **Never let passengers ride in the cargo area or on top of a folded-down back seat.** All occupants should sit upright, fully back in their seats with their seat belts on and their feet on the floor.
- **Passengers should not move out of or change seats while the vehicle is moving.** A passenger who is not wearing a seat belt during a crash or emergency stop can be thrown against the inside of the vehicle, against other occupants, or out of the vehicle.
- **Each seat belt is designed to restrain one occupant.** If more than one person uses the same seat belt, they could be seriously injured or killed in a collision.
- **Do not use any accessories on seat belts.** Devices claiming to improve occupant comfort or reposition the seat belt can reduce the protection provided by the seat belt and increase the chance of serious injury in a crash.
- **Passengers should not place hard or sharp objects between themselves and the air bags.** Carrying hard or sharp objects on your lap or in your mouth can result in injuries if an air bag inflates.
- **Keep occupants away from the air bag covers.** All occupants should sit upright, fully back in their seats with their seat belts on and their feet on the floor. If occupants are too close to the air bag covers, they could be injured if the air bags inflate.
- **Do not attach or place objects on or near the air bag covers.** Any object attached to or placed on the front or side air bag covers could interfere with the proper operation of the air bags.

- **Do not modify the front seats.** Modification of the front seats could interfere with the operation of the supplemental restraint system sensing components or side air bags.
- **Do not place items under the front seats.** Placing items under the front seats could interfere with the operation of the supplemental restraint system sensing components and wiring harnesses.
- **Never hold an infant or child on your lap.** The infant or child could be seriously injured or killed in the event of a crash. All infants and children should be properly restrained in appropriate child safety seats or seat belts in the rear seat.

⚠ WARNING

- **Sitting improperly or out of position can cause occupants to be shifted too close to a deploying air bag, strike the interior structure or be thrown from the vehicle resulting in serious injury or death.**

(Continued)

(Continued)

- **Always sit with the seatback in an upright position, centered on the seat cushion with your seat belt on, legs comfortably extended and your feet on the floor.**

Adding equipment to or modifying your air bag-equipped vehicle

If you modify your vehicle by changing your vehicle's frame, bumper system, front end or side sheet metal or ride height, this may affect the operation of your vehicle's air bag system.

Air bag warning label

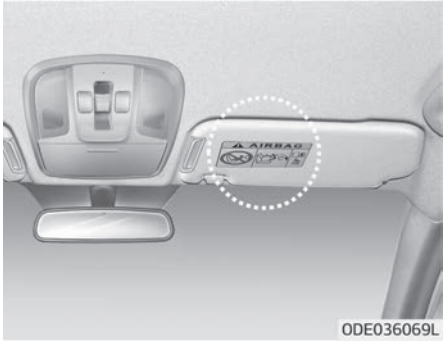

Air bag warning labels are attached to alert the passengers of the potential risk of the air bag system.
Note that these government warnings focus on the risk of children. We also want you to be aware of the risks which adults are exposed to that have been described in previous pages.

Features of your vehicle

Keys....5-04
Record your key number....5-04
Key operations....5-04
Immobilizer system....5-05
Remote keyless entry....5-07
Remote keyless entry system operations....5-07
Smart key system operation....5-07
Transmitter precautions....5-08
Battery replacement....5-09
Theft-alarm system....5-11
Armed stage....5-11
Theft-alarm stage....5-12
Disarmed stage....5-12
Door locks....5-14
Operating door locks from outside the vehicle....5-14
Operating door locks from inside the vehicle....5-15
Door lock/unlock features....5-16
Child-protector rear door locks....5-17
Rear Occupant Alert (ROA) system....5-17
Tailgate....5-19
Opening the tailgate....5-19
Closing the tailgate....5-20
Emergency tailgate safety release....5-20
Windows....5-22
Power windows....5-22
Hood....5-27
Opening the hood....5-27
Closing the hood....5-28
Fuel filler door (hybrid)....5-29
Opening the fuel filler door....5-29
Closing the fuel filler door....5-29
Fuel filler door (plug-in hybrid)....5-32
Opening the fuel filler door....5-32
Closing the fuel filler door....5-33
Sunroof....5-37
Sunshade....5-37
Tilt open/close....5-38
Slide open/close....5-38
Automatic reversal....5-39
Resetting the sunroof....5-40
Sunroof open warning....5-41
Steering wheel....5-42
Electric power steering....5-42
Tilt & telescopic steering....5-43
Heated steering wheel....5-44
Horn....5-45
Mirrors....5-46
Inside rearview mirror....5-46
Outside rearview mirror....5-47
Instrument cluster....5-50
Instrument cluster control....5-51
Gauges....5-53
Dual clutch transmission shift indicator....5-59
Dual clutch transmission shift indicator in sports mode (for Europe)....5-60
LCD Display....5-62
LCD display modes....5-63
Trip information (trip computer)....5-74
Warning messages....5-79
Warning and indicator lights....5-86

Warning lights....5-86
Indicator lights....5-92
Rear View Monitor (RVM)....5-96
Rear View While Driving....5-96
Reverse Parking Distance Warning (PDW)....5-98
Reverse Parking Distance Warning operation....5-98
Reverse Parking Distance Warning not operation....5-99
Rear Parking Distance Warning precautions....5-99
Self-diagnosis....5-100
Forward/Reverse Parking Distance Warning (PDW)....5-101
Forward/Reverse Parking Distance Warning operation....5-101
Forward/Reverse Parking Distance Warning not operation....5-104
Self-diagnosis....5-105
Lighting....5-107
Battery saver function....5-107
Headlight escort function....5-107
Daytime running light....5-107
Lighting control....5-108
High beam operation....5-110
High Beam Assist (HBA)....5-111
Turn signals and lane change signals....5-113
Front fog light....5-113
Rear fog light....5-114
Headlight leveling device....5-114
Wipers and washers....5-116
Windshield wipers....5-116
Windshield washers....5-118
Rear window wiper and washer switch....5-119
Interior light....5-121
Automatic turn off function....5-121
Map lamp....5-121
Room lamp....5-122
Tailgate room lamp....5-122
Vanity mirror lamp....5-123
Welcome system....5-124
Welcome light....5-124
Escort welcome....5-124
Interior light....5-124
Defroster....5-125
Rear window defroster....5-125
Climate control system....5-126
System operation....5-126
Air conditioning....5-126
Climate control air filter....5-128
Air conditioning refrigerant label....5-129
Checking the amount of air conditioner refrigerant and compressor lubricant....5-129
Automatic climate control system....5-131
Automatic heating and air conditioning....5-132
Automatic ventilation....5-140
Sunroof inside air recirculation....5-140
Windshield defrosting and defogging....5-141
Automatic climate control system....5-141
Operation tips....5-141
Defogging logic....5-142
Auto defogging system....5-142
Storage compartment....5-144
Center console storage....5-144

Glove box.....5-144
Sunglass holder.....5-145
Luggage box.....5-145
Interior features.....5-146
Ashtray.....5-146
Cup holder.....5-146
Sun visor.....5-147
Seat warmer.....5-148
Air ventilation seat.....5-150
Power outlet.....5-150
USB charger.....5-151
AC inverter.....5-152
Wireless smart phone charging system.....5-153
Clothes hanger.....5-155
Floor mat anchor(s).....5-156
Luggage net holder.....5-157
Cargo security screen.....5-157
Exterior features.....5-158
Roof rack.....5-158
Audio system.....5-160
Antenna.....5-160
USB port.....5-160
How vehicle radio works.....5-160

KEYS

Record your key number

The key code number is stamped on the key code tag attached to the key set.

Should you lose your keys, Kia recommends to contact an authorized Kia dealer/service partner. Remove the key code tag and store it in a safe place. Also, record the key code number and keep it in a safe place (not in the vehicle).

Key operations

Folding key

To unfold the key, press the release button then the key will unfold automatically.
To fold the key, fold the key manually while pressing the release button.

⚠ CAUTION

Do not fold the key without pressing the release button. This may damage the key.

Smart key

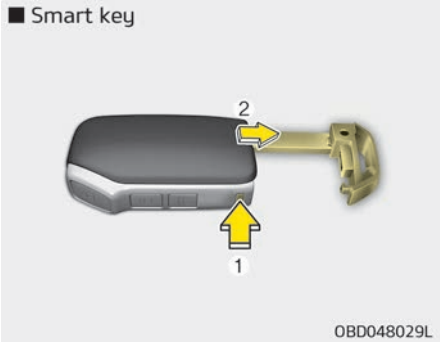

To remove the mechanical key, press and hold the release button (1) and remove the mechanical key (2).
To reinstall the mechanical key, put the key into the hole and push it until a click sound is heard.

⚠ WARNING

■ Ignition key (smart key)

Leaving children unattended in a vehicle with the ignition key (smart

(Continued)

(Continued)

key) is dangerous even if the key is not in the ignition switch or start button is ACC or ON position.
Children copy adults and they could place the key in the ignition switch or press the start button. The ignition key (smart key) would enable children to operate power windows or other controls, or even make the vehicle move, which could result in serious bodily injury or even death. Never leave the keys in your vehicle with unsupervised children, when the engine is running.

⚠ WARNING

Kia recommends to use parts for replacement from an authorized Kia dealer/service partner. If an aftermarket key is used, the ignition switch may not return to ON after START. If this happens, the starter will continue to operate causing damage to the starter motor and possible fire due to excessive current in the wiring.

Immobilizer system

Your vehicle is equipped with an electronic engine immobilizer system to reduce the risk of unauthorized vehicle use.
Your immobilizer system is comprised of a small transponder in the ignition key and electronic devices inside the vehicle.
With the immobilizer system, whenever you insert your ignition key into the ignition switch and turn it to ON or Whenever the ENGINE START/STOP button is changed to the ON position, it checks and determines and verifies if the ignition key is valid or not.
If the key is determined to be valid, the engine will start.
If the key is determined to be invalid, the engine will not start.

To activate the immobilizer system:

Turn the ignition key to the OFF position or change the ENGINE START/STOP button to the OFF position. The immobilizer system activates automatically. Without a valid ignition key for your vehicle, the engine will not start.

To deactivate the immobilizer system:

Insert the ignition key into the key cylinder and turn it to the ON position or change the ENGINE START/STOP button to the ON position.

⚠ WARNING

In order to prevent theft of your vehicle, do not leave spare keys anywhere in your vehicle. Your immobilizer password is a customer unique password and should be kept confidential. Do not leave this number anywhere in your vehicle.

✻ NOTICE

When starting the engine, do not use the key with other immobilizer keys around. Otherwise the engine may not start or may stop soon after it starts. Keep each key separately in order to avoid a starting malfunction.

⚠ CAUTION

Do not put metal accessories near the ignition switch. Metal accessories may interrupt the transponder signal and may prevent the engine from being started.

✻ NOTICE

If you need additional keys or lose your keys, Kia recommends to visit an authorized Kia dealer/service partner.

⚠ CAUTION

The transponder in your ignition key is an important part of the immobilizer system. It is designed to give years of trouble-free service, however you should avoid exposure to moisture, static electricity and rough handling. Immobilizer system malfunction could occur.

⚠ CAUTION

Do not change, alter or adjust the immobilizer system because it could cause the immobilizer system to malfunction. In this case, have the system serviced by a professional workshop. Kia recommends to visit an authorized Kia dealer/service partner.
Malfunctions caused by improper alterations, adjustments or modifications to the immobilizer system are not covered by your vehicle manufacturer warranty.

REMOTE KEYLESS ENTRY

Remote keyless entry system operations

■ Folding key

ODEP041244L

■ Smart Key

ODEP041245L

Lock (1)

All doors (and tailgate) are locked if the lock button is pressed.

If all doors (and tailgate) are closed, the hazard warning lights will blink once to indicate that all doors (and tailgate) are locked.

Unlock (2)

All doors (and tailgate) are unlocked if the unlock button is pressed.
The hazard warning lights will blink twice to indicate that all doors (and tailgate) are unlocked.
However, after pressing this button, the doors (and tailgate) will lock automatically unless you open any door within 30 seconds.

Tailgate unlock (3)

The tailgate is unlocked if the button is pressed for more than 1 second.
The hazard warning lights will blink twice to indicate that the tailgate is unlocked.
However, after pressing this button, the tailgate will lock automatically unless you open the tailgate within 30 seconds.
Also, once the tailgate is opened and then closed, the tailgate will lock automatically.

❊ The word "HOLD" is written on the button to inform you that you must press and hold the button for 1 second.

Smart key system operation (if equipped)

ODEP041544L

With a smart key, you can lock or unlock a door (and tailgate) and even start the engine without inserting the key.
The functions of the buttons on a smart key are similar to the remote keyless entry. (Refer to "Remote keyless entry" on page 5-07.)
Carrying the smart key, you may lock and unlock the vehicle doors (and tailgate). Also, you may start the engine. Refer to the following, for more details.

Locking

Pressing the button of the front outside door handles with all doors (and tailgate) closed and any door unlocked, locks all the doors (and tailgate). The hazard warning lights will blink once to indicate that all doors (and tailgate) are locked. The button will only operate when the smart key is within 0.7~1 m (28~39.3 in) from the outside door handle. If you want to make sure that a door has locked or not, you should check the door lock button inside the vehicle or pull the outside door handle.
Even though you press the button, the doors will not lock and the chime sounds if any of the following occurs:

- The smart key is in the vehicle.
- The ENGINE START/STOP button is in the ACC or ON position.
- Any door except the tailgate is opened.

Unlocking

Pressing the button of the front outside door handles with all doors (and tailgate) closed and locked, unlocks all the doors (and tailgate). The hazard warning lights will blink twice to indicate that all doors (and tailgate) are unlocked. The button will only operate when the smart key is within 0.7~1 m (28~39.3 in) from the outside door handle.
When the smart key is recognized in the area of 0.7~1 m (28~39.3 in) from the front outside door handle, other people can also open a door without possession of the smart key.

Tailgate unlocking

If you are within 0.7~1 m (28~39.3 in) from the outside tailgate handle, with your smart key in possession, the tailgate will unlock.
The hazard warning lights will blink twice to indicate that the tailgate is unlocked.
Also, once the tailgate is opened and then closed, the tailgate will lock automatically.

Start-up

You can start the engine without inserting the key. For detailed information refer to “Starting the engine with a smart key” on page 6-13.

Transmitter precautions

The transmitter will not work if any of the following occurs:

- The ignition key is in the ignition switch. (for folding key)
- Another vehicle’s smart key is being operated close to your vehicle.
- You exceed the operating distance limit (about 10 m [30 feet]).
- The battery in the transmitter is weak.
- Other vehicles or objects may be blocking the signal.
- The weather is extremely cold.
- The transmitter is close to a radio transmitter such as a radio station or an airport which can interfere with normal operation of the transmitter.

- If the transmitter is in close proximity to your cell phone or smart phone, the signal from the transmitter could be blocked by normal operation of your cell phone or smart phone. This is especially important when the phone is active such as making call, receiving calls, text messaging, and/or sending/ receiving emails.
  Avoid placing the transmitter and your cell phone or smart phone in the same pants or jacket pocket and maintain adequate distance between the two devices.

When the transmitter does not work correctly, open and close the door with the mechanical key. If you have a problem with the transmitter, Kia recommends to contact an authorized Kia dealer/service partner.

⚠ CAUTION

Keep the transmitter away from water or any liquid. If the keyless entry system is inoperative due to exposure to water or other liquids, it will not be covered by your manufacturer's vehicle warranty.

⚠ CAUTION

Changes or modifications not expressly approved by the party responsible for compliance could void the user's authority to operate the equipment. If the keyless entry system is inoperative due to changes or modifications not expressly approved by the party responsible for compliance, it will not be covered by your manufacturer's vehicle warranty.

Battery replacement

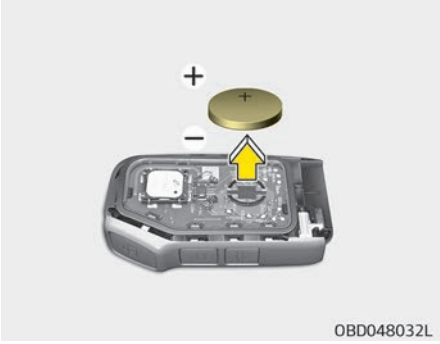

The transmitter or smart key uses a 3 volt lithium battery which will normally last for several years. When replacement is necessary, use the following procedure.

1. Insert a slim tool into the slot and gently pry open the transmitter or smart key cover.
2. Replace the battery with a new battery (CR2032). When replacing the battery, make sure the battery position.
3. Install the battery in the reverse order of removal.

For transmitter or smart key replacement, Kia recommends to visit an authorized Kia dealer/service partner.

⚠ CAUTION

- **The keyless entry system transmitter is designed to give you years of trouble-free use, however it can malfunction if exposed to moisture or static electricity. If you are unsure how to use or replace the battery, Kia recommends to contact an authorized Kia dealer/service partner.**
- **Using the wrong battery can cause the transmitter or smart key to malfunction. Be sure to use the correct battery.**
- **To avoid damaging the transmitter or smart key, don't drop it, get it wet, or expose it to heat or sunlight.**

⚠ CAUTION

An inappropriately disposed battery can be harmful to the environment and human health.
Dispose the battery according to your local law(s) or regulation.

THEFT-ALARM SYSTEM (IF EQUIPPED)

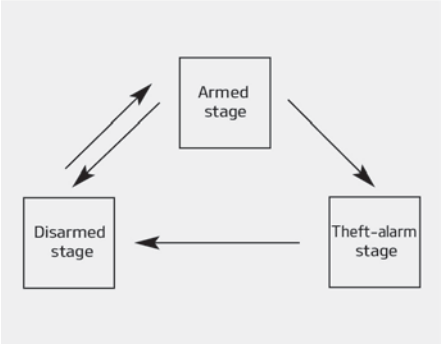

This system is designed to provide protection from unauthorized entry into the vehicle. This system is operated in three stages: the first is the "Armed" stage, the second is the "Theft-alarm" stage, and the third is the "Disarmed" stage. If triggered, the system provides an audible alarm with blinking of the hazard warning lights.

Armed stage

Park the vehicle and stop the engine. Arm the system as described below.

Using the folding key

1. Turn off the engine and remove the ignition key from the ignition switch.
2. Make sure that all doors, the engine hood and tailgate are closed and latched.
3. Lock the doors by pressing the lock button on the transmitter.
   After completion of the steps above, the hazard warning lights will blink once to indicate that the system is armed.
   If the tailgate or engine hood remains opened, the hazard warning lights will not operate and theft-alarm will not arm. After this, if the tailgate and engine hood are closed, the hazard warning lights will blink once and the theft-alarm will arm.

Using the smart key

1. Turn off the engine.
2. Make sure that all doors, the engine hood and tailgate are closed and latched.
3. • Lock the doors by pressing the button of the front outside door handle with the smart key in your possession.
   After completion of the steps above, the hazard warning lights will operate once to indicate that the system is armed.
   If the tailgate or engine hood remains opened, the hazard warning lights will not operate and theft-alarm will not arm. After this, if the tailgate and engine hood are closed, the hazard warning lights will blink once and the theft-alarm will arm.
   • Lock the doors by pressing the lock button on the smart key.
   After completion of the steps above, the hazard warning lights will operate once to indicate that the system is armed.
   If the tailgate or engine hood remains opened, the hazard warning lights will not operate and theft-alarm will not arm. After this, if the tailgate and engine hood are closed, the hazard warning lights will blink once and the theft-alarm will arm.

Do not arm the system until all passengers have left the vehicle. If the system is armed while a passenger(s) remains in the vehicle, the alarm may be activated when the remaining passenger(s) leaves the vehicle. If any door (or tailgate) or engine hood is opened within 30 seconds after the system enters the armed stage, the system will be disarmed to prevent unnecessary alarm.

Theft-alarm stage

The alarm will be activated if any of the following occurs while the system is armed.

- A front or rear door is opened without using the transmitter.
- The tailgate is opened without using the transmitter.
- The engine hood is opened.

The horn will sound and the hazard warning lights will blink continuously for approximately 27 seconds. To turn off the system, unlock the doors with the transmitter.

Disarmed stage

The system will be disarmed when:

Folding key

- The door unlock button is pressed.
- The engine is started. (within 3 seconds)
- The ignition switch is in the "ON" position for 30 seconds or more.

Smart key

- The door unlock button is pressed.
- The button of the front outside door is pressed while carrying the smart key.
- The engine is started. (within 3 seconds)

After the doors are unlocked, the hazard warning lights will blink twice to indicate that the system is disarmed.
After pressing the unlock button, if any door (or tailgate) is not opened within 30 seconds, the system will be rearmed.

✻ NOTICE

- Without smart key system
  If the system is not disarmed with the transmitter, insert the key into the ignition switch and start the engine. Then the system will be disarmed.
- With smart key system
  If the system is not disarmed with the smart key, open the door with the mechanical key and start the engine. Then the system will be disarmed.
- If you lose your keys, Kia recommends to visit an authorized Kia dealer/service partner.

⚠ CAUTION

Do not change, alter or adjust the theft-alarm system because it could cause the theft-alarm system to malfunction. Have the system serviced by a professional workshop. Kia

(Continued)

(Continued)

recommends to visit an authorized Kia dealer/service partner.
Malfunctions caused by improper alterations, adjustments or modifications to the theft-alarm system are not covered by your vehicle manufacturer warranty.

DOOR LOCKS

Operating door locks from outside the vehicle

- Turn the key toward the rear of the vehicle to lock and toward the front of the vehicle to unlock.
- Doors can also be locked and unlocked with the transmitter.
- Once the doors are unlocked, they may be opened by pulling the door handle.
- When closing the door, push the door by hand. Make sure the doors are closed securely.

NOTICE

- In cold and wet climates, door lock and door mechanisms may not work properly due to freezing conditions.
- If the door is locked/unlocked multiple times in rapid succession with either the vehicle key or door lock switch, the system may stop operating temporarily in order to protect the circuit and prevent damage to system components.

WARNING

- **If you don't close the door securely, the door may open again.**
- **Be careful that someone's body and hands are not trapped when closing the door.**

WARNING

If people must spend a longer time in the vehicle while it is very hot or cold outside, there is rick of injuries or danger to life. Do not lock the vehicle from the outside when there are people in it.

CAUTION

Do not frequently repeat opening and closing of doors, or apply excessive force to a door while the door closer is operating.

Operating door locks from inside the vehicle

With the door lock button

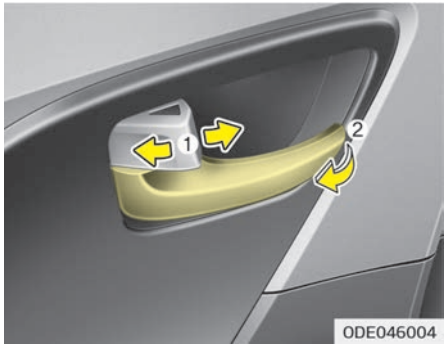

- To unlock a door, pull the door lock button (1) to the "Unlock" position. The red mark on the door lock button will be visible.
- To lock a door, push the door lock button (1) to the "Lock" position. If the door is locked properly, the red mark on the door lock button will not be visible.
- To open a door, pull the door handle (2) outward.
- If the inner door handle of the driver's (or front passenger's) door is pulled when the door lock button is in the lock position, the button will unlock and the door will open.
- Front door cannot be locked if the ignition key is in the ignition switch (or if the smart key is in the vehicle) and the front door is opened.

⚠ WARNING

■ Door lock malfunction

If a power door lock ever fails to function while you are in the vehicle, try one or more of the following techniques to exit:

- **Operate the door unlock feature repeatedly (both electronic and manual) while simultaneously pulling on the door handle.**
- **Operate the other door locks and handles, front and rear.**
- **Lower a front window and use the key to unlock the door from outside.**
- **Move to the cargo area and open the tailgate.**

⚠ WARNING

Do not pull the inner door handle of driver's (or passenger's) door while the vehicle is moving.

With central door lock switch

Operate by pressing the central door lock switch.

- When pressing the (🔒) portion (1) of the switch, all vehicle doors will lock.
- When pressing the (🔓) portion (2) of the switch, all vehicle doors will unlock.

- If the key is in the ignition switch (or if the smart key is in the vehicle) and any door is opened, the doors will not lock even though the (🔒) portion (1) of the central door lock switch is pressed.

⚠ WARNING

■ Doors

- **The doors should always be fully closed and locked while the vehicle is in motion to prevent accidental opening of the door. Locked doors will also discourage potential intruders when the vehicle stops or slows down.**
- **Be careful when opening doors and watch for vehicles, motorcycles, bicycles or pedestrians approaching the vehicle in the path of the door. Opening a door when something is approaching can cause damage or injury.**

⚠ WARNING

■ Unlocked vehicles

Leaving your vehicle unlocked can invite theft or possible harm to you or others from someone hiding in your vehicle while you are gone. Always remove the ignition key, engage the parking brake, close all windows and lock all doors when leaving your vehicle unattended.

⚠ WARNING

■ Unattended children

An enclosed vehicle can become extremely hot, causing death or severe injury to unattended children or animals who cannot escape the vehicle. Furthermore, children might operate features of the vehicle that could injure them, or they could encounter other harm, possibly from someone gaining entry to the vehicle. Never leave children or animals unattended in your vehicle.

Door lock/unlock features

Impact sensing door unlock system (if equipped)

All doors will automatically unlock when an impact causes the air bags to deploy.

Speed sensing door lock system (if equipped)

All doors will automatically lock after the vehicle speed exceeds 15 km/h.
You can activate or deactivate the auto door lock/unlock features in the vehicle. Refer to “User setting” on page 5-65.

Child-protector rear door locks

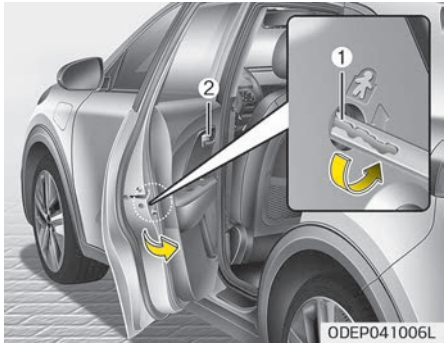

The child safety lock is provided to help prevent children from accidentally opening the rear doors from inside the vehicle. The rear door safety locks should be used whenever children are in the vehicle.
The child safety lock is located on the edge of each rear door. When the child safety lock is in the lock position (1), the rear door will not open if the inner door handle (2) is pulled.
To lock the child safety lock, insert a key (or screwdriver) into the hole and turn it to the lock position.

To allow a rear door to be opened from inside the vehicle, unlock the child safety lock.

⚠ WARNING

■ Rear door locks

If children accidentally open the rear doors while the vehicle is in motion, they could fall out and be severely injured or killed. To prevent children from opening the rear doors from the inside, the rear door safety locks should be used whenever children are in the vehicle.

Rear Occupant Alert (ROA) system

The Rear Occupant Alert (ROA) is provided to help prevent exiting the vehicle with a rear passenger left in the vehicle.
When you open the front door after opening and closing the rear door and turning off the engine, the "Check rear seats" warning message appears on the cluster.
You can activate or deactivate the ROA from the User Settings mode in the cluster LCD display.
The option can be found under the following menu:

1. Press the MODE button (🗐) several times on the steering wheel until 'User Settings' menu appears on the LCD.
2. Select 'Convenience ➡ Rear Occupant Alert' with the MOVE switch (⋀ /⋁) and the OK button on the steering wheel.

⚠ WARNING

The Rear Occupant Alert (ROA) system does not actually detect objects or people in the rear seat. By using a rear door opened and closed history, the system informs the driver that there may be something in the rear seat.

⚠ CAUTION

The Rear Occupant Alert (ROA) system uses a rear door opened and closed history.
The history is reset after the driver turns off ignition normally, exits the vehicle and locks the door remotely using the remote keyless entry. So
(Continued)

(Continued)

even if a rear door does not reopen, the ROA system alert can occur.
For example, after the ROA system alert occurs, if the driver does not lock the door, and drives again, the alert can occur.

⚠ WARNING

The door lock system may not work if the electrical system is compromised. Accordingly, please train children passengers regarding how to open the car door manually before an emergency situation arises. That way, they would be able to open the door manually in the event an emergency situation arises.

TAILGATE

⚠ WARNING

■ Exhaust fumes

If you drive with the tailgate opened, you will draw dangerous exhaust fumes into your vehicle which can cause serious injury or death to vehicle occupants.
If you must drive with the tailgate opened, keep the air vents and all windows open so that additional outside air comes into the vehicle.

⚠ WARNING

■ Rear cargo area

Occupants should never ride in the rear cargo area where no restraints are available. To avoid injury in the event of an accident or sudden stops, occupants should always be properly restrained.

Opening the tailgate

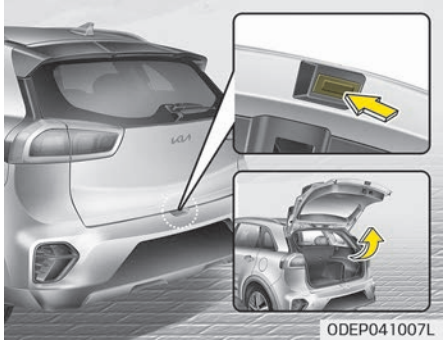

- The tailgate is locked or unlocked when all doors are locked or unlocked with the transmitter, smart key or central door lock/unlock switch.
- Only the tailgate is unlocked if the tailgate unlock button on the transmitter or smart key is pressed for approximately 1 second.
- If unlocked, the tailgate can be opened by pressing the handle and pulling it up.
- Once the tailgate is opened and then closed, the tailgate locks automatically. (All doors must be locked.)

✻ NOTICE

In cold and wet climates, door lock and door mechanisms may not work properly due to freezing conditions.

⚠ WARNING

The tailgate swings upward. Make sure no objects or people are near the rear of the vehicle when opening the tailgate.

⚠ CAUTION

Make certain that you close the tailgate before driving your vehicle. Possible damage may occur to the gas lifters and attaching hardware if the tailgate is not closed prior to driving.

Closing the tailgate

Lower and push down the tailgate firmly. Make sure that the tailgate is securely latched.

⚠ WARNING

Make sure your hands, feet and other parts of your body are safely out of the way before closing the tailgate.

⚠ WARNING

■ Exhaust fumes

The tailgate lid should always be kept completely closed while the vehicle is in motion. If it is left open or ajar, exhaust gases may enter the car and serious illness or death may result.

⚠ CAUTION

Make sure nothing is near the tailgate latch and striker while closing the tailgate. It may damage the tailgate's latch.

Emergency tailgate safety release

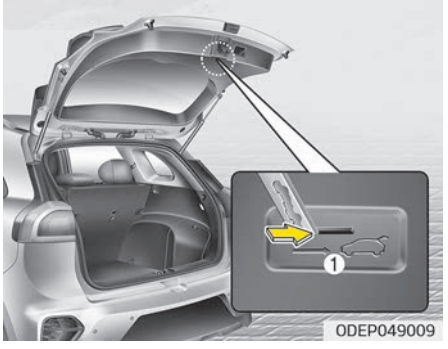

Your vehicle is equipped with the emergency tailgate safety release lever located on the bottom of the tailgate. When someone is inadvertently locked in the luggage compartment. The tailgate can be opened by doing as follows:

1. Input the mechanical key into the hole.
2. Push the mechanical key to the right (1).
3. Push up the tailgate.

⚠ WARNING

- For emergencies, be fully aware of the location of the emergency tailgate safety release lever in the vehicle and how to open the tailgate if you are accidentally locked in the luggage compartment.
- No one should be allowed to occupy the luggage compartment of the vehicle at any time. The luggage compartment is a very dangerous location in the event of a crash.
- Use the release lever for emergencies only. Use with extreme caution, especially while the vehicle is in motion.

⚠ WARNING

Do not grasp the part supporting the tailgate (gas lifter), as this may cause serious injury.

WINDOWS

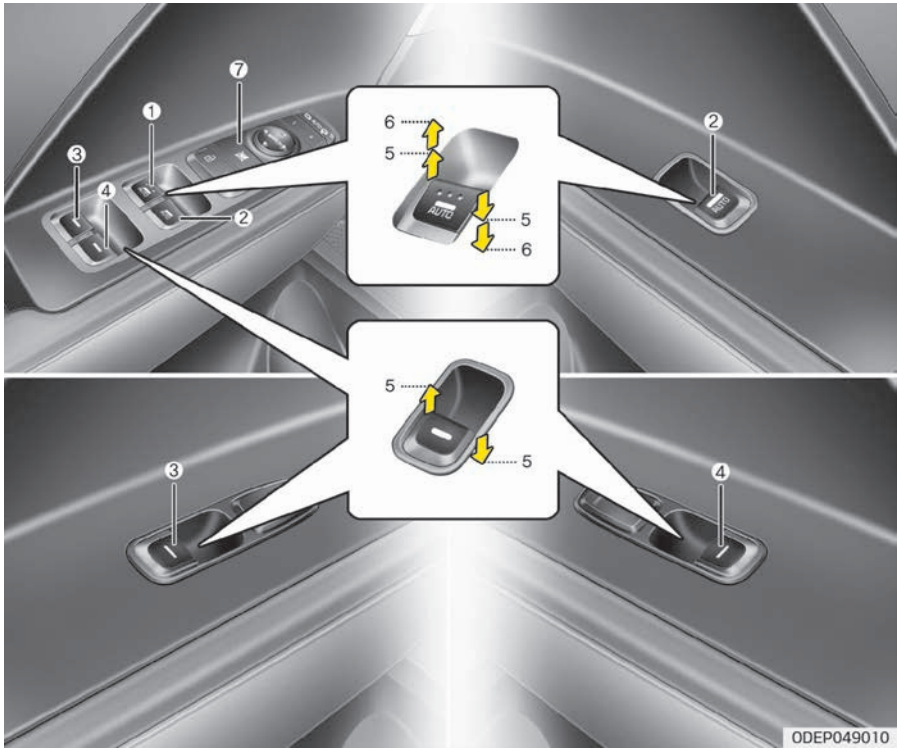

1. Driver's door power window switch
2. Front passenger's door power window switch
3. Rear door (left) power window switch
4. Rear door (right) power window switch
5. Window opening and closing
6. Automatic power window up*/ down*
7. Power window lock switch

✻ NOTICE

In cold and wet climates, power windows may not work properly due to freezing conditions.

Power windows

The ignition switch must be in the ON position for power windows to operate.

*: if equipped

Each door has a power window switch that controls the door's window. The driver has a power window lock button which can block the operation of passenger windows. The power windows can be operated for approximately 30 seconds after the ignition key is removed or turned to the ACC or LOCK position. However, if the front doors are opened, the power windows cannot be operated even within the 30 second period.
The driver's door has a master power window switch that controls all the windows in the vehicle.
If the window cannot be close because it is blocked by objects, remove the objects and close the window.

✻ NOTICE

While driving with the rear windows down or with the sunroof (if equipped) in an open (or partially open position), your vehicle may demonstrate a wind buffeting or pulsation noise. This noise is a normal occurrence and can be reduced or eliminated by taking the following actions.

(Continued)

(Continued)

If the noise occurs with one or both of the rear windows down, partially lower both front windows approximately one inch. If you experience the noise with the sunroof open, slightly reduce the size of the sunroof opening.

⚠ WARNING

Do not install any accessories in the area of windows. It may impact jam protection.

Window opening and closing

Type A

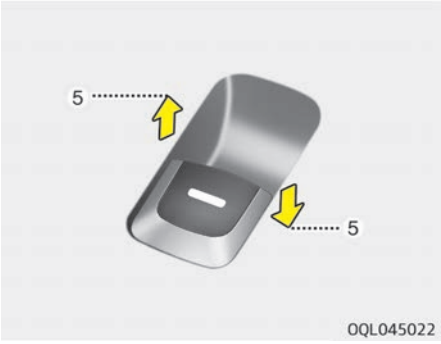

To open or close a window, press down or pull up the front portion of the corresponding switch to the first detent position (5).

Type B - Auto up/down window (if equipped)

Pressing or pulling up the power window switch momentarily to the second detent position (6) completely lowers or raises the window even when the switch is released. To stop the window at the desired position while the window is in operation, pull up or press down and release the switch.
If the power window does not operate normally, the automatic power window system must be reset as follows:

1. Turn the ignition switch to the ON position.
2. Close the window and continue pulling up the power window switch for at least 1 second after the window is completely closed.

Type C - Auto down window (if equipped) (Driver's window)

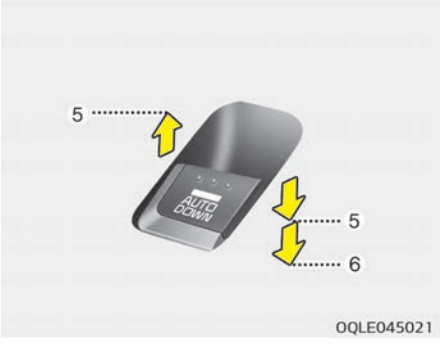

Pressing the power window switch momentarily to the second detent position (6) completely lowers the driver's window even when the switch is released. To stop the window at the desired position while the window is in operation, pull up the switch momentarily to the opposite direction of the window movement.

Automatic reversal (For Type B)

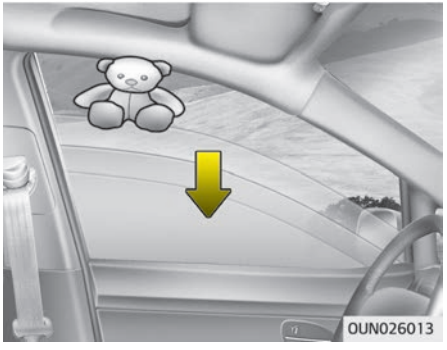

If the upward movement of the window is blocked by an object or part of the body, the window will detect the resistance and will stop upward movement. The window will then lower approximately 30 cm (11.8 in) to allow the object to be cleared.
If the window detects the resistance while the power window switch is pulled up continuously, the window will stop upward movement then lower approximately 2.5 cm (1 in).

And if the power window switch is pulled up continuously again within 5 seconds after the window is lowered by the automatic window reversal feature, the automatic window reversal will not operate.

✻ NOTICE

The automatic reverse feature for the window is only active when the "auto up" feature is used by fully pulling up the switch. The automatic reverse feature will not operate if the window is raised using the half-way position on the power window switch.

⚠ WARNING

Always check for obstructions before raising any window to avoid injuries or vehicle damage. If an object less than 4 mm (0.16 in) in diameter is caught between the window glass and the upper window channel, the automatic reverse window may not

(Continued)

(Continued)

detect the resistance and will not stop and reverse direction.

⚠ WARNING

The automatic reverse feature doesn't active while resetting power window system.
Make sure body parts or other objects are safely out of the way before closing the windows to avoid injuries or vehicle damage.

Power window lock button

The driver can disable the power window switches on the rear passengers' doors by pressing the power window lock switch to the lock position (pressed).
When the power window lock switch is pressed:

- The driver's master control can operate the front passenger's power window and the rear passengers' power windows.
- The front passenger's control can operate the front passenger's power window.

- The rear passengers' control cannot operate the rear passengers' power window.

⚠ CAUTION

- **To prevent possible damage to the power window system, do not open or close two windows or more at the same time. This will also ensure the longevity of the fuse.**
- **Never try to operate the main switch on the driver's door and the individual door window switch in opposite directions at the same time. If this is done, the window will stop and cannot be opened or closed.**

⚠ WARNING

■ Windows

- **Never leave the keys in your vehicle with unsupervised children, when the engine is running.**

(Continued)

(Continued)

- **Never leave any child unattended in the vehicle. Even very young children may inadvertently cause the vehicle to move, entangle themselves in the windows, or otherwise injure themselves or others.**
- **Always double check to make sure all arms, hands, head and other obstructions are safely out of the way before closing a window.**
- **Do not allow children play with the power windows. Keep the driver's door power window lock button in the LOCK position (pressed). Serious injury can result from unintentional window operation by the child.**
- **Do not extend a face or arms outside through the window opening while driving.**

HOOD

Opening the hood

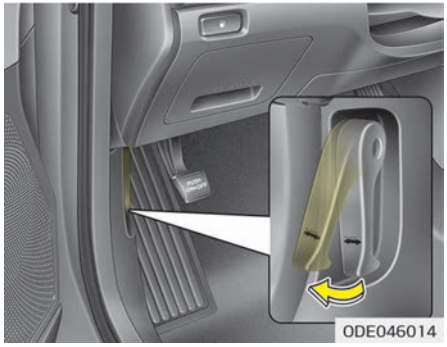

1. Pull the release lever to unlatch the hood. The hood should pop open slightly.

⚠ WARNING

Open the hood after turning off the engine on a flat surface, shifting the shift lever to the P(Park) position for dual clutch transmission and setting the parking brake.

2. Go to the front of the vehicle, raise the hood slightly, push the secondary latch (1) up side and lift the hood (2).
3. Raise the hood. It will completely rise by itself after it has been raised about halfway.

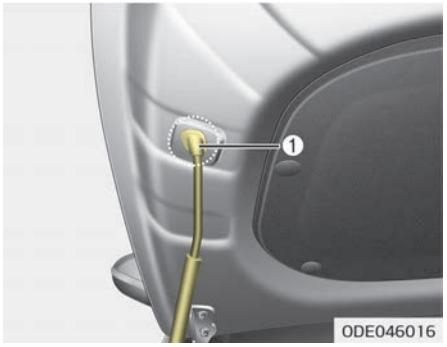

4. Pull out the stay rod.
5. Hold the hood opened with the stay rod (1).

⚠ WARNING

- **Grasp the stay rod in the area wrapped in rubber. The rubber will help prevent you from being burned by hot metal when the engine is hot.**

(Continued)

(Continued)

- **The stay rod must be inserted completely into the hole provided whenever you inspect the engine compartment. This will prevent the hood from falling and possibly injuring you.**

Hood open warning (if equipped)

The warning message will appear on the LCD display when hood is open.
The warning chime will operate when the vehicle is being driven above 3 km/h (2 mph) with the hood open.

Closing the hood

1. Before closing the hood, check the following:
   - All filler caps in the engine compartment must be correctly installed.
   - Gloves, rags or any other combustible material must be removed from the engine compartment.
2. Lower the hood halfway and push down to securely lock in place.
   - Then double check to be sure the hood is secure.
   - If the hood can be lifted with a slight force, open the hood again and close it more firmly.

⚠ WARNING

- **Before closing the hood, ensure that all obstructions are removed from the hood opening. Closing the hood with an obstruction present in the hood opening may result in property damage or severe personal injury.**

(Continued)

(Continued)

- **Do not leave gloves, rags or any other combustible material in the engine compartment. Doing so may cause a heat-induced fire.**

⚠ WARNING

- **Always double check to be sure that the hood is firmly latched before driving away. If it is not latched, the hood could open while the vehicle is being driven, causing total loss of visibility, which might result in an accident.**
- **Do not move the vehicle with the hood raised. The view will be blocked and the hood could fall or be damaged.**

FUEL FILLER DOOR (HYBRID)

Opening the fuel filler door

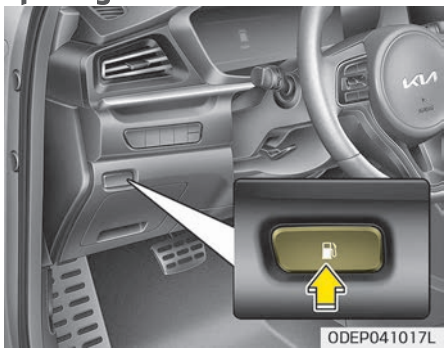

1. The fuel filler door must be opened from inside the vehicle by pushing the fuel filler door opener.

✻ NOTICE

If the fuel filler door does not open because ice has formed around it, tap lightly or push on the door to break the ice and release the door. Do not try on the door. If necessary, spray around the door with an approved de-icer fluid (do not use radiator anti-freeze) or move the vehi-

(Continued)

(Continued)

cle to a warm place and allow the ice to melt.

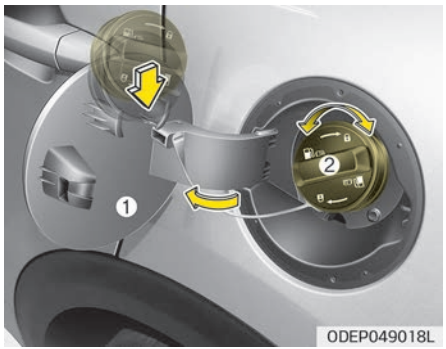

2. Pull the fuel filler door (1) out to fully open.
3. To remove the fuel tank cap (2), turn it counterclockwise. You may hear a hissing noise as the pressure inside the tank equalizes.
4. Place the cap on the fuel filler door.

⚠ WARNING

Before refueling, be sure to check what type of fuel is used for your vehicle. If you put diesel fuel into a gasoline-powered vehicle or gasoline into a diesel-powered vehicle, it may affect the fuel system and cause serious damage to the vehicle.

Closing the fuel filler door

1. To install the cap, turn it clockwise until it "clicks". This indicates that the cap is securely tightened.
2. To close the fuel filler door, press the edge of the fuel filler door. Make sure it is securely closed.

⚠ WARNING

■ Refueling

(Continued)

(Continued)

- If pressurized fuel sprays out, it can cover your clothes or skin and subject you to the risk of fire and burns. Always remove the fuel cap carefully and slowly. If the cap is venting fuel or if you hear a hissing sound, wait until the condition stops before completely removing the cap.
- Do not "top off" after the nozzle automatically shuts off when refueling.
- Always check that the fuel cap is installed securely to prevent fuel spillage in the event of an accident.

⚠ WARNING

■ Refueling dangers

Automotive fuels are flammable materials. When refueling, please note the following guidelines carefully. Failure to follow these guidelines may result in severe personal injury,

(Continued)

(Continued)

severe burns or death by fire or explosion.

- Read and follow all warning posted at the gas station facility.
- Before refueling note the location of the Emergency Gasoline Shut-Off, if available, at the gas station facility.
- Before touching the fuel nozzle, you should eliminate potentially dangerous static electricity discharge by touching another metal part of the vehicle, a safe distance away from the fuel filler neck, nozzle, or other gas source.

(Continued)

(Continued)

- Do not get back into a vehicle once you have begun refueling since you can generate static electricity by touching, rubbing or sliding against any item or fabric (polyester, satin, nylon, etc.) capable of producing static electricity. Static electricity discharge can ignite fuel vapors resulting in rapid burning. If you must reenter the vehicle, you should once again eliminate potentially dangerous static electricity discharge by touching a metal part of the vehicle, away from the fuel filler neck, nozzle or other gasoline source.

(Continued)

(Continued)

- When using an approved portable fuel container, be sure to place the container on the ground prior to refueling. Static electricity discharge from the container can ignite fuel vapors causing a fire.
  Once refueling has begun, contact with the vehicle should be maintained until the filling is complete.
  Use only approved portable plastic fuel containers designed to carry and store gasoline.
- Do not use cellular phones while refueling. Electric current and/or electronic interference from cellular phones can potentially ignite fuel vapors causing a fire.
- When refueling, always shut the engine off. Sparks produced by electrical components related to the engine can ignite fuel vapors causing a fire. Once refueling is complete, check to make sure the filler cap and filler lid are securely closed, before starting the engine.

(Continued)

(Continued)

- DO NOT use matches or a lighter and DO NOT SMOKE or leave a lit cigarette in your vehicle while at a gas station especially during refueling. Automotive fuel is highly flammable and can, when ignited, result in fire.
- If a fire breaks out during refueling, leave the vicinity of the vehicle, and immediately contact the manager of the gas station and then contact the local fire department. Follow any safety instructions they provide.

⚠ CAUTION

- Make sure to refuel your vehicle according to "Fuel requirements" on page 2-03.

(Continued)

(Continued)

- If the fuel filler cap requires replacement, please make sure that you use parts designed for replacement in your vehicle. An incorrect fuel filler cap can result in a serious malfunction of the fuel system or emission control system. For more detailed information, Kia recommends to contact an authorized Kia dealer/service partner.
- Do not spill fuel on the exterior surfaces of the vehicle. Any type of fuel spilled on painted surfaces may damage the paint.
- After refueling, make sure the fuel cap is installed securely to prevent fuel spillage in the event of an accident.

FUEL FILLER DOOR (PLUG-IN HYBRID)

Opening the fuel filler door

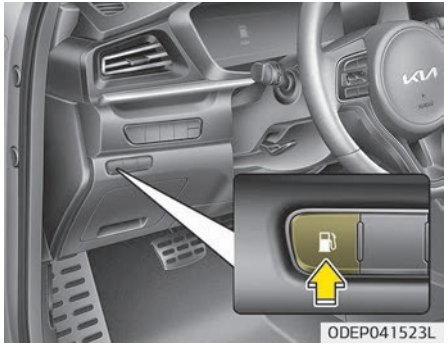

The fuel filler door must be opened from inside the vehicle by pushing the fuel filler door button.

✻ NOTICE

If the fuel filler door does not open because ice has formed around it, tap lightly or push on the door to break the ice and release the door. Do not pry on the door. If necessary, spray around the door with an approved de-icer fluid (do not use radiator anti-freeze) or move the vehicle to a warm place and allow the ice to melt.

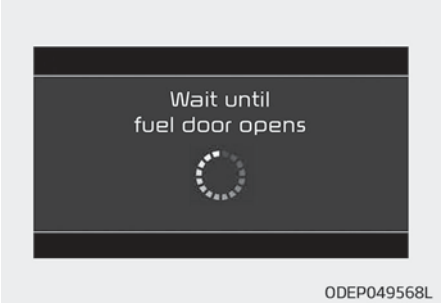

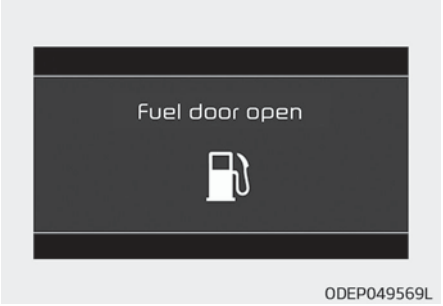

Wait until the fuel tank is depressurized. The message is displayed when the fuel filler door opens after the fuel tank is depressurized.

✻ NOTICE

- It may take up to 20 seconds to open fuel filler door.
- When the fuel filler door is frozen and does not open after 20 seconds at freezing temperature, slightly tap the fuel filler door and then attempt to open it.

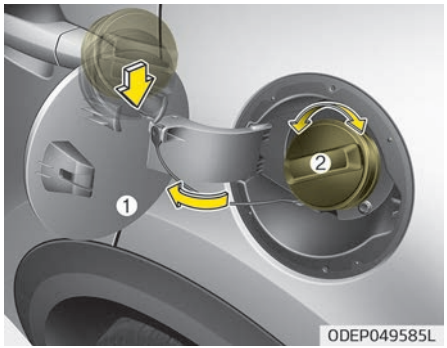

1. Stop the engine.
2. To open the fuel filler door, push the fuel filler door opener button.
3. Pull open the fuel filler door (1).
4. To remove the cap, turn the fuel filler cap (2) counterclockwise (3).
5. Refuel as needed.

⚠ WARNING

- **Add fuel into the fuel tank within 20 minutes after opening the fuel filler door. After 20 minutes, the fuel tank may shut off, causing fuel to overflow. In this case, re-press the fuel filler door opening button.**
- **Do not leave the fuel filler door opened for an extended period of time. It may discharge the battery.**
- **Close the fuel filler door after fueling the vehicle. If you start the vehicle with the fuel filler door opened, the message, "Check fuel door", illuminates on the LCD display.**

(Continued)

(Continued)

- **Avoid refueling the vehicle while charging the (high-voltage) hybrid battery. It may cause a fire or an explosion due to static electricity.**

⚠ WARNING

Before refueling, be sure to check what type of fuel is used for your vehicle. If you put diesel fuel into a gasoline-powered vehicle or gasoline into a diesel-powered vehicle, it may affect the fuel system and cause serious damage to the vehicle.

Closing the fuel filler door

1. To install the cap, turn it clockwise until it "clicks". This indicates that the cap is securely tightened.
2. Close the fuel filler door and push it lightly and make sure that it is securely closed.

Always check that the fuel cap is installed securely to prevent fuel spillage in the event of an accident.

✻ NOTICE

Tighten the cap until it clicks once.

⚠ WARNING

■ Refueling

- If pressurized fuel sprays out, it can cover your clothes or skin and subject you to the risk of fire and burns. Always remove the fuel cap carefully and slowly. If the cap is venting fuel or if you hear a hissing sound, wait until the condition stops before completely removing the cap.
- Do not "top off" after the nozzle automatically shuts off when refueling.
- Always check that the fuel cap is installed securely to prevent fuel spillage in the event of an accident.

⚠ WARNING

■ Refueling dangers

Automotive fuels are flammable materials. When refueling, please note the following guidelines carefully. Failure to follow these guidelines may result in severe personal injury, severe burns or death by fire or explosion.

- Read and follow all warning posted at the gas station facility.
- Before refueling note the location of the Emergency Gasoline Shut-Off, if available, at the gas station facility.
- Before touching the fuel nozzle, you should eliminate potentially dangerous static electricity discharge by touching another metal part of the vehicle, a safe distance away from the fuel filler neck, nozzle, or other gas source.

(Continued)

(Continued)

- Do not get back into a vehicle once you have begun refueling since you can generate static electricity by touching, rubbing or sliding against any item or fabric (polyester, satin, nylon, etc.) capable of producing static electricity. Static electricity discharge can ignite fuel vapors resulting in rapid burning. If you must reenter the vehicle, you should once again eliminate potentially dangerous static electricity discharge by touching a metal part of the vehicle, away from the fuel filler neck, nozzle or other gasoline source.

(Continued)

(Continued)

- When using an approved portable fuel container, be sure to place the container on the ground prior to refueling. Static electricity discharge from the container can ignite fuel vapors causing a fire.
  Once refueling has begun, contact with the vehicle should be maintained until the filling is complete.
  Use only approved portable plastic fuel containers designed to carry and store gasoline.
- Do not use cellular phones while refueling. Electric current and/or electronic interference from cellular phones can potentially ignite fuel vapors causing a fire.
- When refueling, always shut the engine off. Sparks produced by electrical components related to the engine can ignite fuel vapors causing a fire. Once refueling is complete, check to make sure the filler cap and filler door are securely closed, before starting the engine.

(Continued)

(Continued)

- DO NOT use matches or a lighter and DO NOT SMOKE or leave a lit cigarette in your vehicle while at a gas station especially during refueling. Automotive fuel is highly flammable and can, when ignited, result in fire.
- If a fire breaks out during refueling, leave the vicinity of the vehicle, and immediately contact the manager of the gas station and then contact the local fire department. Follow any safety instructions they provide.

⚠ CAUTION

- Make sure to refuel your vehicle according to the "Fuel requirements" on page 2-03.

(Continued)

(Continued)

- If the fuel filler cap requires replacement, please make sure that you use parts designed for replacement in your vehicle.
  An incorrect fuel filler cap can result in a serious malfunction of the fuel system or emission control system. For more detailed information, Kia recommends to contact an authorized Kia dealer/service partner.
- Do not spill fuel on the exterior surfaces of the vehicle. Any type of fuel spilled on painted surfaces may damage the paint.
- After refueling, make sure the fuel cap is installed securely to prevent fuel spillage in the event of an accident.

⚠ WARNING

In case of using EV drive mode for a certain time without running Engine,

(Continued)

(Continued)

EMM(Engine Maintenance Mode) will automatically activate by the system to protect fuel system and the engine.
Therefore, even though if it is possible to use EV drive mode with enough battery power, the engine may run by the system to protect fuel system and the engine.
If you leave the fuel without refueling or using for over 6 months, the remained fuel in the fuel system may be deteriorated. From this, corrosion or blocking problem may occur.
It is recommended using minimum 40% of remained fuel at least every 6 months by selecting Hybrid (CS) mode and refuel the vehicle with new fuel.

SUNROOF (IF EQUIPPED)

If your vehicle is equipped with a sunroof, you can slide or tilt your sunroof with the sunroof switch located on the overhead console.

The sunroof can only be operated when the ignition switch or ENGINE START/STOP button is in the ON or START position.
The sunroof can be operated for approximately 30 seconds after the ignition switch or ENGINE START/STOP button is in the ACC or LOCK/OFF position. However, if the front door is open, the sunroof cannot be operated even within the 30 seconds period.

✻ NOTICE

- Never adjust the sunroof or sunshade while driving. This could result in loss of control and an accident that may cause injury, or property damage.
- Do not leave the engine running and the key in your vehicle with unsupervised children. Unattended children could operate the sunroof, which could result in serious injury.
- Do not sit on the top of the vehicle. It may cause injury or vehicle damage.

✻ NOTICE

Do not operate the sunroof when roof bars are installed on the vehicle or when there is luggage on the roof.

Sunshade

Use the sunshade to block direct sunlight coming through the sunroof glass.
Open or close the sunshade by hand.
The sunshade opens automatically when the sunroof glass is opened, but the sunshade does not close automatically when the sunroof glass is closed. Also, only the sunshade cannot be closed when the sunroof glass is opened.

✻ NOTICE

Do not pull the sunshade up or down, or apply excessive force as such action may damage the sunshade or cause it to malfunction.

Tilt open/close

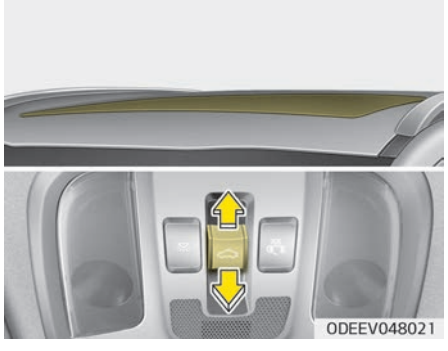

- Push the sunroof switch upward, the sunroof glass tilts open.
- Push the sunroof switch forward, the sunroof glass automatically closes.

To stop the sunroof movement at any point, push the sunroof switch in any direction.

✻ NOTICE

The sunroof glass cannot slide open and tilt open at the same time. You cannot tilt the sunroof glass open while the sunroof glass is slide open. Also, you cannot slide the sunroof glass open while the sunroof is tilt open. Slide open or tilt open the sunroof glass when the sunroof glass is completely closed.

Slide open/close

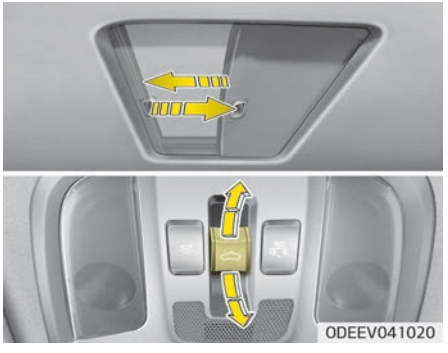

- Push the sunroof switch rearward, the sunshade and sunroof glass slide open.
  Push the sunroof switch forward, only the sunroof glass closes.
- Push the sunroof switch forward or rearward to the first detent position, the sunroof glass moves until the switch is released.

- Push the sunroof switch forward or rearward to the second detent position, the sunroof glass operates automatically (auto slide feature).
  To stop the sunroof movement at any point, push the sunroof switch in any direction.

✻ NOTICE

To reduce wind noise while driving, we recommend that you drive at the recommended position before the maximum slide open position.

Automatic reversal

If the sunroof glass senses any obstacle while it is closing automatically, it will reverse direction then stop at a certain position.
The auto reverse function may not work if an object thin or soft is caught between the sliding sunroof glass and sunroof sash.

⚠ WARNING

- **Make sure heads, hands, arms or any other body parts or objects are out of the way before operating the sunroof. Body parts or objects may get caught causing injuries or vehicle damage.**
- **Never deliberately use your body parts to test the automatic reversal function. The sunroof glass may reverse direction, but there is a risk of injury.**

✻ NOTICE

- Do not continue to push the sunroof switch after the sunroof is fully opened, closed, or tilted. Damage to the sunroof motor could occur.

(Continued)

(Continued)

- Continuous operations such as slide open/close, tilt open/close, etc. may cause the motor or sunroof system to malfunction.
- Regularly remove any accumulated dust on the sunroof rail.
- Dust accumulated between the sunroof and roof panel can make noise Open the sunroof and remove dust regularly using a clean cloth.
- Do not try to open the sunroof when the temperature is below freezing or when the sunroof is covered with snow or ice. The sunroof may not work properly and may break if opened by force.
- Do not open or drive with the sunroof glass open immediately after rain or washing the vehicle. Water may wet the interior of the vehicle.

(Continued)

(Continued)

- Do not extend any luggage outside the sunroof while driving. Vehicle damage may occur if the vehicle suddenly stops.

⚠ WARNING

Do not extend your head, arms, body parts or objects outside the sunroof while driving. Injuries may occur if the vehicle suddenly stops.

Resetting the sunroof

In some circumstances resetting the sunroof operation may need to be performed. Some instances where resetting the sunroof may be required include:

- When the 12-volt battery is either disconnected or discharged
- When the sunroof fuse is replaced
- If the sunroof one-touch AUTO OPEN/CLOSE operation is not functioning properly

Sunroof resetting procedure:

1. It is recommended to perform the reset procedure with the vehicle engine running. Start the vehicle in P (Park).
2. Make sure the sunroof glass is in the fully closed position. If the sunroof glass is open, push the switch forward until the sunroof glass is fully closed.
3. Release the switch when the sunroof glass is fully closed.
4. Push the switch forward until the sunroof glass moves slightly. Then release the switch.
5. Once again push and hold the sunroof switch forward until the sunroof glass slides open and close. Do not release the switch until the operation is completed.
   If you release the switch during operation, start the procedure again from step 2.

✻ NOTICE

If the sunroof is not reset when the vehicle battery is disconnected or

(Continued)

(Continued)

discharged, or the sunroof fuse is blown, the sunroof may not operate normally.

Sunroof open warning

If the driver turns off the engine when the sunroof is not fully closed, the warning chime will sound for several seconds and the sunroof open warning will appear on the cluster LCD display. Close the sunroof securely when leaving your vehicle.

⚠ CAUTION

Make sure the sunroof is closed fully when leaving your vehicle.
If the sunroof is left open, rain or snow may wet the interior of the vehicle. Also, leaving the sunroof open when the vehicle is unattended may invite theft.

STEERING WHEEL

Electric power steering

Power steering uses an electric motor to assist you in steering the vehicle. If the engine is off or if the power steering system becomes inoperative, the vehicle may still be steered, but it will require increased steering effort.
Electric power steering is controlled by the power steering control unit which senses the steering wheel torque and vehicle speed to command the motor.
The steering effort becomes heavier as the vehicle's speed increases and becomes lighter as the vehicle's speed decreases for better control of the steering wheel.
Should you notice any change in the effort required to steer during normal vehicle operation, have the system checked by a professional workshop. Kia recommends to visit an authorized Kia dealer/service partner.

✻ NOTICE

The following symptoms may occur during normal vehicle operation:

(Continued)

(Continued)

- The EPS warning light does not illuminate.
- The steering effort is high immediately after turning the ignition switch on. This happens as the EPS system performs the diagnostics. When the diagnostics is completed, the steering effort will return to its normal condition.
- A click noise may be heard from the EPS relay after the ignition switch is turned to the ON or LOCK position.
- Motor noise may be heard when the vehicle is at a stop or at a low driving speed.
- The steering effort can suddenly increase, if the operation of the EPS system is stopped to prevent serious accidents when EPS control unit detects malfunction of the EPS system by self-diagnosis.

(Continued)

(Continued)

- The steering effort increases if the steering wheel is rotated continuously when the vehicle is not in motion.
  However, after a few minutes, it will return to its normal conditions.
- If the Electric Power Steering System does not operate normally, the warning light will illuminate on the instrument cluster. The steering wheel may become difficult to control or operate abnormally. In this case, have the system inspected by a professional workshop. Kia recommends to visit an authorized Kia dealer/service partner.

(Continued)

(Continued)

- When you operate the steering wheel in low temperature, the steering effort may be high and abnormal noise could occur. If temperature rises, the noise will disappear. This is a normal condition.
- If the vehicle needs to be jump started due to battery discharge, the steering wheel may not function normally. This is a temporary situation caused by low battery voltage. It will be solved once the battery is charged. Check for normal steering function by turning the steering wheel slowly before driving the vehicle.

(Continued)

(Continued)

- When abnormality is detected in the electric power steering system, to prevent a deadly accident, the steering assist function will stop. At this time, the warning light turns on or blinks on the cluster. The steering wheel may become difficult to control or operate. Have your vehicle checked immediately, after moving the vehicle to a safe zone.

Tilt & telescopic steering

A tilt and telescopic steering wheel allows you to adjust the steering wheel before you drive. You can also raise it to give your legs more space when you get on or off the vehicle.
The steering wheel should be positioned so that it is comfortable for you to drive, while permitting you to see the instrument panel warning lights and gauges.

⚠ WARNING

- **Never adjust the angle of the steering wheel while driving. You may lose steering control and cause severe personal injury, death or accidents.**
- **After adjusting, push the steering wheel both up and down to be certain it is locked in position.**

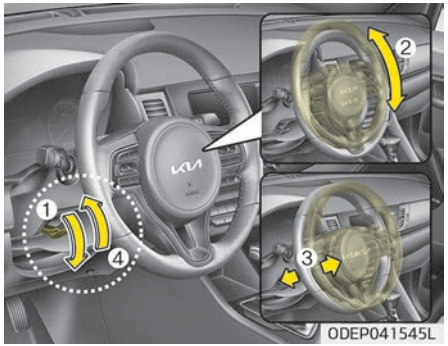

To change the steering wheel angle, pull down the lock release lever (1), adjust the steering wheel to the desired angle (2) and height (3), then pull up the lock-release lever (4) to lock the steering wheel in place. Be sure to adjust the steering wheel to the desired position before driving.

✻ NOTICE

After adjustment, sometimes the lock-release lever may not lock the steering wheel.

(Continued)

(Continued)

It is not a malfunction. This occurs when two gears engage. In this case, adjust the steering wheel again and then lock the steering wheel.

Heated steering wheel (if equipped)

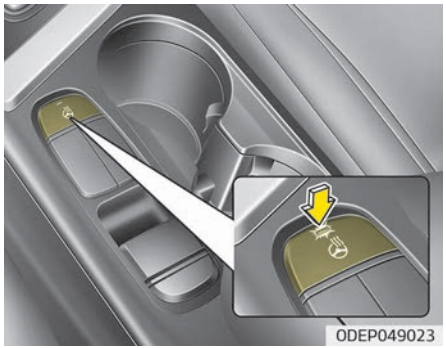

With the ignition switch in the ON position or ENGINE START/STOP button in the ON position, pressing the heated steering wheel button warms the steering wheel. The indicator on the button will illuminate.

To turn the heated steering wheel off, press the button once again. The indicator on the button will turn off.

✻ NOTICE

The heated steering wheel will turn off automatically approximately 30 minutes after the heated steering wheel is turned on.

⚠ CAUTION

Do not install any grip to operate the steering wheel. This causes damage to the heated steering wheel system.

Horn

To sound the horn, press the area indicated by the horn symbol on your steering wheel (see illustration). The horn will operate only when this area is pressed. Check the horn regularly to be sure it operates properly.

⚠ CAUTION

- **Do not strike the horn severely to operate it, or hit it with your fist. Do not press on the horn with a sharp-pointed object.**
- **When cleaning the steering wheel, do not use an organic solvent such as thinner, benzene, alcohol and gasoline. Doing so may damage the steering wheel.**

MIRRORS

Inside rearview mirror

Adjust the rearview mirror so that the center view through the rear window is seen. Make this adjustment before you start driving.

⚠ WARNING

■ Rear visibility

Do not place objects in the rear seat or cargo area which would interfere with your vision through the rear window.

⚠ WARNING

Do not adjust the rearview mirror while the vehicle is moving. This could result in loss of control, and an accident which could cause death, serious injury or property damage.

⚠ WARNING

Do not modify the inside mirror and don't install a wide mirror. It could result in injury, during an accident or deployment of the air bag.

Day/night rearview mirror (if equipped)

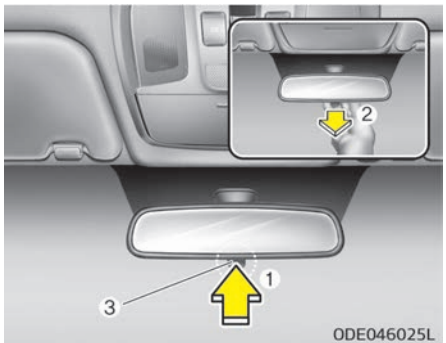

Make this adjustment before you start driving and while the day/night lever (3) is in the day position (1).

Pull the day/night lever (3) toward you (2) to reduce the glare from the headlights of the vehicles behind you during night driving.

Remember that you lose some rearview clarity in the night position.

❊ (1): Day, (2): Night

Electrochromic mirror (ECM) (if equipped)

The electric rearview mirror automatically controls the glare from the headlights of the vehicles behind you in nighttime or low light driving conditions. The sensor (3) mounted in the mirror senses the light level around the vehicle, and automatically controls the headlight glare from the vehicles behind you.
When the engine is running, the glare is automatically controlled by the sensor mounted in the rearview mirror.

Whenever the shift lever is shifted into reverse (R), the mirror will automatically go to the brightest setting in order to improve the drivers view behind the vehicle.

⚠ CAUTION

When cleaning the mirror, use a paper towel or similar material dampened with glass cleaner. Do not spray glass cleaner directly on the mirror. It may cause the liquid cleaner to enter the mirror housing.

To operate the electric rearview mirror:

- The mirror defaults to the ON position whenever the ignition switch is turned on.
- Press the ON/OFF button (1) to turn the automatic dimming function off. The mirror indicator light (2) will turn off.
  Press the ON/OFF button (1) to turn the automatic dimming function on. The mirror indicator light (2) will illuminate.

Outside rearview mirror

Be sure to adjust the mirror angles before driving.

Your vehicle is equipped with both left-hand and right-hand outside rearview mirrors. The mirrors can be adjusted remotely with the remote switch. The mirror heads can be folded back to prevent damage during an automatic car wash or when passing through a narrow street.

⚠ WARNING

■ Rearview mirrors

- **The outside rearview mirror is convex. Objects seen in the mirror are closer than they appear.**
- **Use your interior rearview mirror or direct observation to determine the actual distance of following vehicles when changing lanes.**

⚠ CAUTION

Do not scrape ice off the mirror face; this may damage the surface of the glass. If ice should restrict the move-

(Continued)

(Continued)

ment of the mirror, do not force the mirror for adjustment. To remove ice, use a deicer spray, or a sponge or soft cloth with warm water.

⚠ CAUTION

If the mirror is jammed with ice, do not adjust the mirror by force. Use an approved spray de-icer (not radiator antifreeze) to release the frozen mechanism or move the vehicle to a warm place and allow the ice to melt.

⚠ WARNING

Do not adjust or fold the outside rearview mirrors while the vehicle is moving. This could result in loss of control, and an accident which could cause death, serious injury or property damage.

Remote control

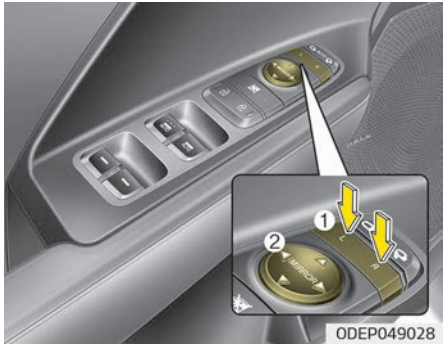

Adjusting the rearview mirrors:

1. Press either the L (Front left side) or R (Front right side) button (1) to select the rearview mirror you would like to adjust.
2. Use the mirror adjustment control (2) to position the selected mirror up, down, left or right.
3. After adjustment, put the button into neutral (center) position to prevent inadvertent adjustment.

⚠ CAUTION

- **The mirrors stop moving when they reach the maximum adjusting angles, but the motor continues to operate while the switch is pressed. Do not press the switch longer than necessary, the motor may be damaged.**
- **Do not attempt to adjust the outside rearview mirror by hand. Doing so may damage the parts.**

Folding the outside rearview mirror

Manual type

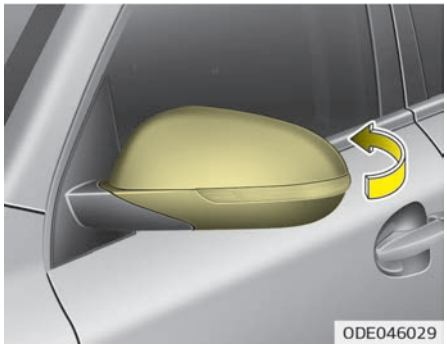

To fold the outside rearview mirror, grasp the housing of the mirror and then fold it toward the rear of the vehicle.

Electric type

The outside rearview mirror can be folded or unfolded by pressing the switch as below.
Left: The mirror will unfold.
Right: The mirror will fold.
Center (AUTO): The mirror will fold or unfold automatically as follows:

- Without smart key system
  - The mirror will fold or unfold when the door is locked or unlocked by the transmitter. (if equipped)
- With smart key system
  - The mirror will fold or unfold when the door is locked or unlocked by the smart key.
  - The mirror will fold or unfold when the door is locked or unlocked by the button on the outside door handle.
  - The mirror will unfold when you approach the vehicle (all doors closed and locked) with a smart key in possession. (if equipped)

⚠ CAUTION

The electric type outside rearview mirror operates even though the ignition switch is in the LOCK position or the ENGINE START/STOP button is in the OFF position. However, to prevent unnecessary battery discharge, do not adjust the mirrors longer than necessary while the engine is not running.

⚠ CAUTION

In case it is an electric type outside rearview mirror, don't fold it by hand. It could cause motor failure.

INSTRUMENT CLUSTER

■ Type A for Hybrid

■ Type B for Hybrid

❊ The actual cluster and contents of the LCD display in the vehicle may differ from the illustration.

ODEP049100L/ODEP049101L

1. Hybrid system gauge
2. Fuel gauge
3. Speedometer
4. Warning and indicator lights
5. LCD display
6. Battery SOC (State of Charge) gauge
7. Distance To Empty

❊ For more details, refer to the "Gauges" on page 5-53.

■ Type A for Plug-in Hybrid

■ Type B for Plug-in Hybrid

❊ The actual cluster and contents of the LCD display in the vehicle may differ from the illustration.

ODEP049182L/ODEP049183L

1. Hybrid system gauge
2. Fuel gauge
3. Speedometer
4. Warning and indicator lights
5. LCD display
6. Battery SOC (State of Charge) gauge
7. Distance To Empty

❊ For more details, refer to the "Gauges" on page 5-53.

Instrument cluster control

Adjusting instrument cluster illumination

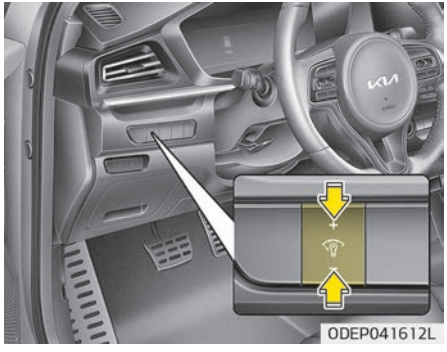

ODEP041612L

⚠ WARNING

Never adjust the instrument cluster while driving. This could result in loss of control and lead to an accident that may cause death, serious injury, or property damage.

The brightness of the instrument panel illumination is changed by pressing the illumination control button ("+" or "–") when the ignition switch or ENGINE START/STOP button is ON, or the tail lights are turned on.

- If you hold the illumination control button ("+" or "–"), the brightness will be changed continuously.
- If the brightness reaches to the maximum or minimum level, an alarm will sound.

Gauges

Speedometer

■ Type A

ODEP049105L

■ Type B

ODEP049539L

The speedometer indicates the speed of the vehicle and is calibrated in kilometers per hour (km/h) and/or miles per hour (mph).

Tachometer (if equipped)

■ Type B - ECO mode selected

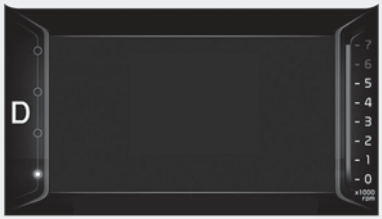

ODEP049529L

■ Type B - SPORT mode selected

ODEP049215

The tachometer indicates the approximate number of engine revolutions per minute (rpm).
When moving the shift lever to the "S" (SPORT) mode, the engine tachometer is displayed while switching to SPORT mode.
Use the tachometer to select the correct shift points and to prevent lugging and/or over-revving the engine.

⚠ CAUTION

Do not operate the engine within the tachometer's RED ZONE. This may cause severe engine damage.

Hybrid system gauge

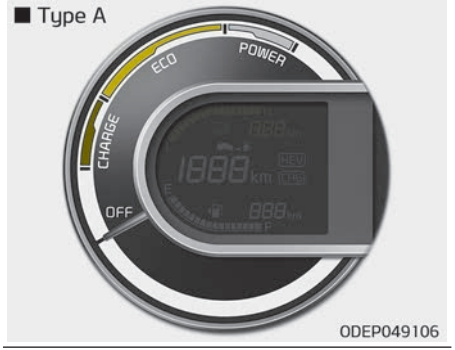

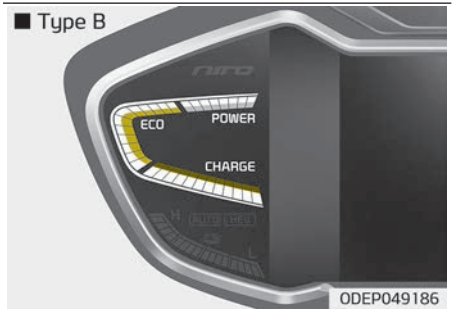

The hybrid system gauge indicates whether the current driving condition is fuel efficient or not.

CHARGE: Shows that the energy made by the vehicle is being converted to electrical energy. (Regenerated energy)

ECO: Shows that the vehicle is being driven in an Eco-friendly manner.

POWER: Shows that the vehicle is exceeding the Eco-friendly range.

✻ NOTICE

Accordance to the hybrid system gauge area the "EV" indicator comes on or off.

- "EV" indicator ON: Vehicle is driven using the electric motor or the gasoline engine is stopped except for an engine can remain idle for automatic heating and air conditioning operation in winter.
- "EV" indicator OFF: Vehicle is driven using the gasoline engine.

Hybrid battery SOC (state of charge) gauge

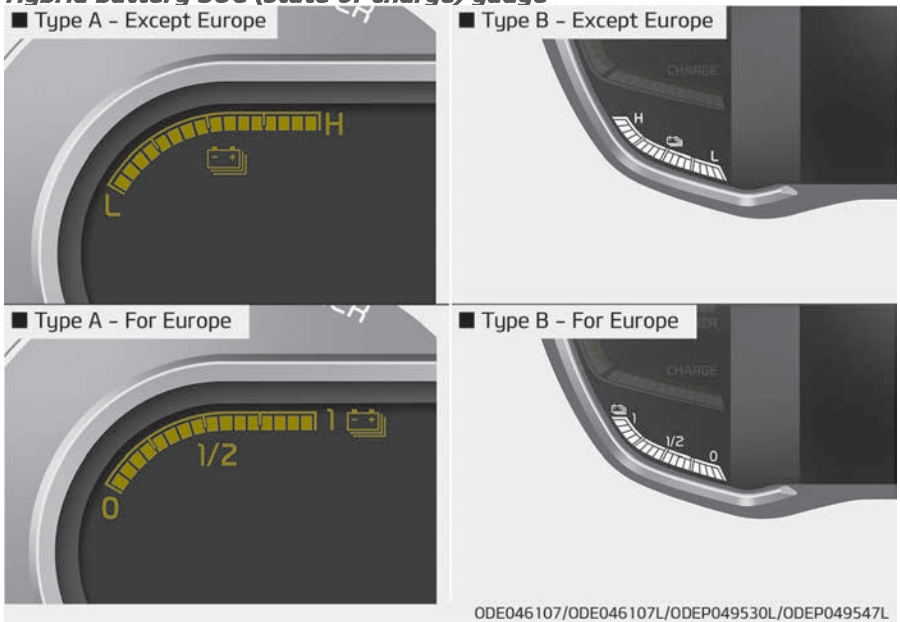

ODE046107/ODE046107L/ODEP049530L/ODEP049547L

This gauge indicates the remaining hybrid battery power. If the SOC is near the "L (Low) or 0" level, the vehicle automatically operates the engine to charge the battery. However, if the Service Indicator ( ) and Malfunction Indicator Lamp (MIL) ( ) turn on when the SOC gauge is near the "L (Low) or 0" level, have the vehicle checked by a professional workshop. Kia recommends to visit an authorized Kia dealer/service partner.

✻ NOTICE

Never try to start the vehicle if the fuel tank is empty. In this condition, the engine cannot charge the high voltage battery of the hybrid system. If you try to start the vehicle when the fuel is empty, the high voltage battery will become discharged and be damaged.

Plug-in hybrid mode indicator

- CD (Charge Depleting, Electric) mode

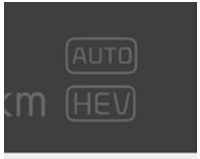

ODEP049550L

: The high-voltage (hybrid) battery is used to drive the vehicle.

- AUTO mode

ODEP049548L

: The AUTO mode will be automatically selected from either from Electric (CD) mode or Hybrid (CS) mode by the system according to the driving condition.

- CS (Charge Sustaining, Hybrid) mode

ODEP049549L

: The high-voltage (hybrid) battery and gasoline engine is used to drive the vehicle.

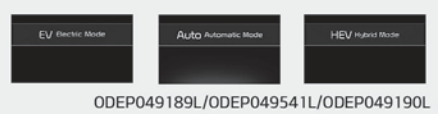

ODEP049189L/ODEP049541L/ODEP049190L

A corresponding message is displayed to indicate the selected mode.

Fuel gauge

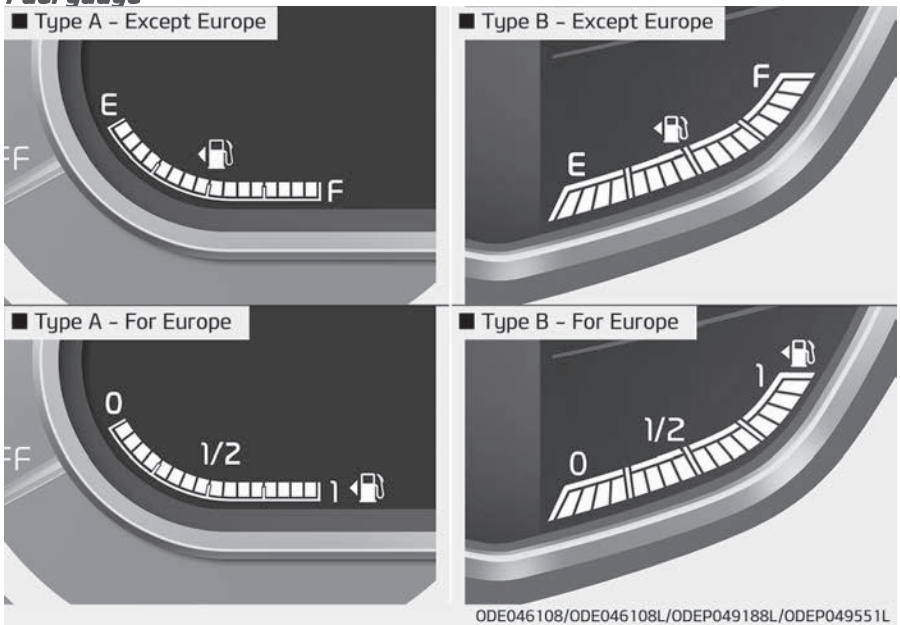

This gauge indicates the approximate amount of fuel remaining in the fuel tank.

✻ NOTICE

- The fuel tank capacity is given in "Recommended lubricants and capacities" on page 9-13.
- The fuel gauge is supplemented by a low fuel warning light, which will illuminate when the fuel tank is nearly empty.
- On inclines or curves, the fuel gauge pointer may fluctuate or the low fuel warning light may come on earlier than usual due to the movement of fuel in the tank.

⚠ WARNING

■ Fuel Gauge

Running out of fuel can expose vehicle occupants to danger.

(Continued)

(Continued)

You must stop and obtain additional fuel as soon as possible after the warning light comes on or when the gauge indicator comes close to the "0 or E (Empty)" level.

⚠ CAUTION

Avoid driving with a extremely low fuel level. Running out of fuel could cause the engine to misfire damaging the catalytic converter.

Distance to empty

■ Type A

ODEP049142L

■ Type B

ODEP049561L

- The distance to empty is the estimated distance the vehicle can be driven with the remaining fuel.
  - Distance range: 1~9,999 km or 1~9,999 mi.
- If the estimated distance is below 1 km (1 mi.), the trip computer will display "---" as distance to empty.
- If the level of the remaining fuel is more than three-quarters, more than 3 liters of fuel must be refilled for the fuel gauge to change. In other cases, more than 6 liters of fuel must be refilled for the vehicle to change the fuel gauge.

✻ NOTICE

- If the vehicle is not on level ground or the battery power has been interrupted, the distance to empty function may not operate correctly.
- The distance to empty may differ from the actual driving distance as it is an estimate of the available driving distance.
- The fuel economy and distance to empty may vary significantly based on driving conditions, driving habits, and condition of the vehicle.

Odometer

The odometer Indicates the total distance that the vehicle has been driven and should be used to determine when periodic maintenance should be performed.

- Odometer range: 0 ~ 1,599,999 km or 999,999 miles.

Outside temperature gauge

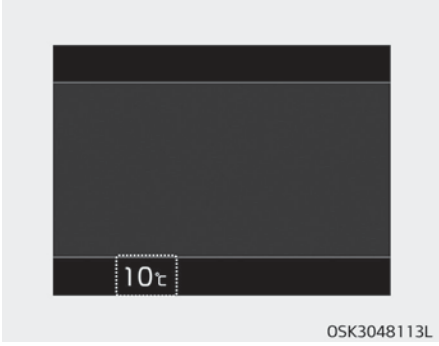

This gauge indicates the current outside air temperatures by 1 °C (1 °F).

- Temperature range: -40 °C~60 °C (-40 °F~140 °F)

The outside temperature on the display may not change immediately like a general thermometer to prevent the driver from being inattentive.
The temperature unit can be changed by using the "User Settings" mode of the LCD display.

❋ For more details, refer to "LCD Display" on page 5-62.

Dual clutch transmission shift indicator

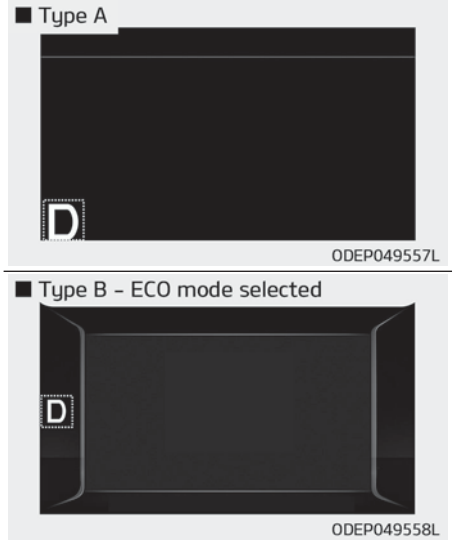

■ Type B - SPORT mode select

ODEP049191

This indicator displays which shift lever is selected.

- Park: P
- Reverse: R
- Neutral: N
- Drive: D
- Sports mode: S

Dual clutch transmission shift indicator in sports mode (for Europe, if equipped)

■ Type A

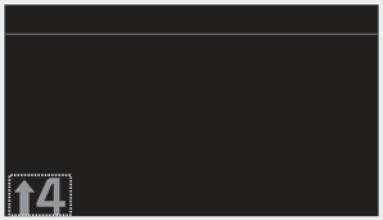

ODEP049559L

■ Type B - ECO mode selected

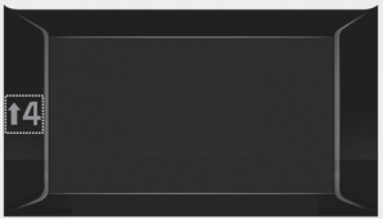

ODEP049560L

■ Type B - SPORT mode select

ODEP049191L

If the driver selects "Sports mode" and changes gear, both higher and lower, the gear will automatically change to manual "Sports mode". Depending on the selected gear, the gear display range will be from 1 to 6.

- Shifting up: ↑2, ↑3, ↑4, ↑5, ↑6
- Shifting down: ↓1, ↓2, ↓3, ↓4, ↓5

For example

↑4: Display means the optimal gear is 4 and driver should shift up to 4.

↓2: Display means the optimal gear is 2 and driver should shift down to 2.

When the operation conditions are not satisfied properly the indicator is not displayed.

LCD DISPLAY

LCD Display Control

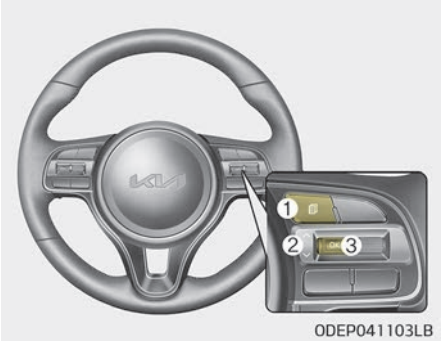

The LCD display modes can be changed by using the control buttons.

1. : MODE button for changing modes
2. ∧/∨: MOVE switch for changing items
3. OK : SELECT/RESET button for setting or resetting the selected item

LCD display modes

	Mode				
	Trip Computer	TBT	Driving Assist	User Settings	Master warning
Up/ Down	Range	Route Guidance	Lane Departure Warning	Driver Assistance	The Master Warning mode displays warning messages related to the vehicle when one or more systems is not operating normally.
	Fuel Economy	Destination Info	Lane Keeping Assist	Door	
	Accumulated Info		Intelligent Speed Limit Warning	Lights	
			Smart Cruise Control		
			Lane Following Assist		
	Drive Info		Driver Attention Warning	Sound	
	Digital Speedometer		Intelligent Speed Limit Warning	Convenience	
	Driving Style		TPMS	Service Interval	
	Energy Flow			Other	
	Engine Temperature			Language	
				Reset	

❊ The information provided may differ depending on which functions are applicable to your vehicle.

Trip computer mode

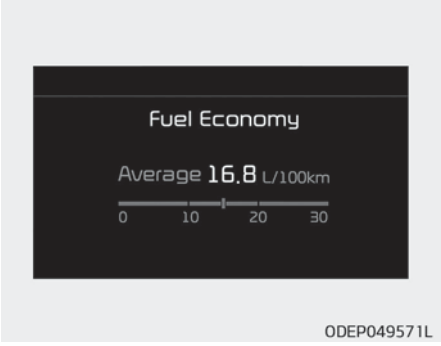

The trip computer mode displays information related to vehicle driving parameters including fuel economy, tripmeter information and vehicle speed.

❈ For more details, refer to "Trip Computer" on page 5-74.

Turn By Turn (TBT) mode

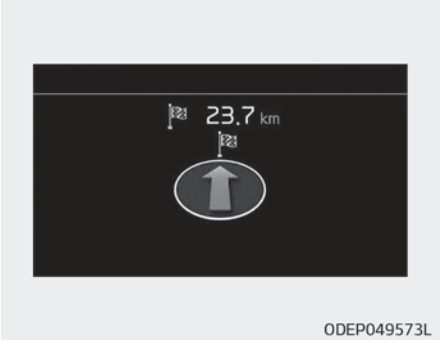

This mode displays the state of the navigation.

Driving Assist

This mode displays the state of :

•- Lane Departure Warning
- Lane Keeping Assist
- Intelligent Speed Limit Warning
- Smart Cruise Control
- Lane Following Assist
• Driver Attention Warning

❈ For more details, refer to each system information in chapter 6.

- Tire Pressure

❈ For more details, refer to "Tire Pressure Monitoring System (TPMS)" on page 7-11.

Master warning mode

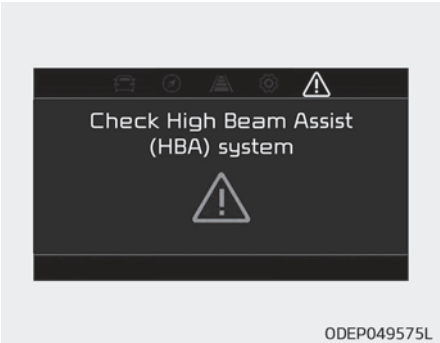

This warning light informs the driver the following situations.

- Forward Collision-Avoidance Assist malfunction (if equipped)
- Forward Collision-Avoidance Assist front radar is blocked. (if equipped)
- Blind-Spot Collision Warning malfunction (if equipped)
- Blind-Spot Collision Warning radar blocked (if equipped)
- Intelligent Speed Limit Warning malfunction (if equipped)
- High Beam Assist malfunction (if equipped)
- Smart Cruise Control malfunction (if equipped)
- Smart Cruise front radar is blocked. (if equipped)
- Lane Following Assist malfunction (if equipped), etc.
- Lamp malfunction
- LED headlamp malfunction (if equipped)
- Tire Pressure Monitoring System (TPMS) malfunction (if equipped)

At this time, a Master Warning icon (⚠) will appear beside the User Settings icon (⚙), on the LCD display. If the warning situation is solved, the master warning light will be turned off and the Master Warning icon will disappear.

User settings mode

In this mode, you can change the settings of the instrument cluster, doors, lamps, etc.

1. Driver Assistance
2. Door
3. Lights
4. Sound
5. Convenience
6. Service Interval
7. Other
8. Language
9. Reset

The information provided may differ depending on which functions are applicable to your vehicle.

Shift to P to edit settings

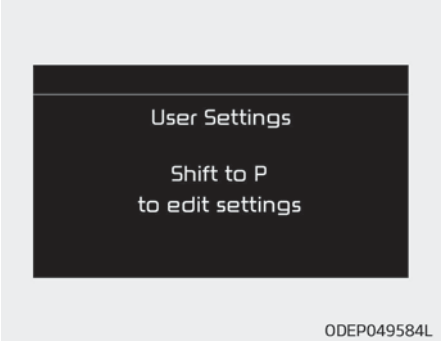

This warning message appears if you try to adjust the User Settings while driving.

For your safety, change the User Settings after parking the vehicle, applying the parking brake and moving the shift lever to P (Park).

1. Driver assistance (if equipped)

Items	Explanation
SCC Reaction	• Fast/Normal/Slow To adjust the sensitivity of Smart Cruise Control. ❈ For more details, refer to “Smart Cruise Control (SCC)” on page 6-95.

Items	Explanation
Driving Assist	• Lane Following Assist To select the function. ❈ For more details, refer to "Lane Following Assist (LFA)" on page 6-111. • Speed Limit Warning To select the function. ❈ For more details, refer to "Intelligent Speed Limit Warning (ISLW)" on page 6-81.
Driver Attention Warning	• Leading vehicle departure warning To select the function. • Low Activity Warning To select the function. ❈ For more details, refer to "Driver Attention Warning (DAW)" on page 6-86.
Warning Timing	• Normal/ Later To select the Warning time
Warning Volume	• High/Medium/Low To select the Warning Volume.
Forward Safety	• Active Assist/Warning only/Off To select the functions. ❈ For more details, refer to "Forward Collision-Avoidance Assist (FCA)" on page 6-48.

Items	Explanation
Lane Safety	• Lane Keeping Assist/Lane Departure Warning/Off To select the function. ❈ For more details, refer to “Lane Keeping Assist (LKA)” on page 6-62.
Blind-Spot Safety	• Warning only/Off To select the function. ❈ For more details, refer to “Blind-Spot Collision Warning (BCW)” on page 6-69.
Parking Safety	• Rear Cross-Traffic Safety To select the function. ❈ For more details, refer to ““Rear Cross-Traffic Collision Warning (RCCW)” on page 6-117”.

❈ The information provided may differ depending on which functions are applicable to your vehicle.

2. Door

Items	Explanation
Automatically Lock	• Off : The auto door lock operation will be deactivated. • Enable on speed: All doors will be automatically locked when the vehicle speed exceeds 15km/h (9.3mph) • Enable on shift: All doors will be automatically locked if the vehicle is shifted from the P (Park) position to the R (Reverse), N (Neutral), or D (Drive) position.
Automatically Unlock	• Off : The auto door unlock operation will be canceled. • Vehicle off/On key out : All doors will be automatically unlocked when the ENGINE START/STOP button is set to the OFF position or the ignition key is removed from the ignition switch. • On shift to P: All doors will be automatically unlocked if the gear is shifted to the P (Park) position.

❋ The information provided may differ depending on which functions are applicable to your vehicle.

3. Lights

Items	Explanation
One Touch Turn Signal	• Off: The one touch turn signal function will be deactivated. • 3, 5, 7 Flashes: The turn signal indicator will blink 3, 5, or 7 times when the turn signal lever is moved slightly. ❊ For more details, refer to "Lighting" on page 5-107.
Ambient Light Brightness	• Adjust the brightness of the Ambient light. - Off/Level 1,2,3,4
Ambient Light Color	• Select the color of the ambient light. - White, Gray, Blue, Eco Green, Bronze, Red
Headlight Delay	To activate or deactivate the headlight delay function.
High Beam Assist	To activate or deactivate High Beam Assist function.

❊ The information provided may differ depending on which functions are applicable to your vehicle.

4. Sound

Items	Explanation
Parking Distance Warning Volume	• Adjust Park Distance Warning volume (High/Low).

❋ **The information provided may differ depending on which functions are applicable to your vehicle.**

5. Convenience (if equipped)

Items	Explanation
Seat Easy Access	• Off : The seat easy access function will be deactivated. • Normal/Extended: When you turn off the engine, the driver's seat will automatically move rearward short (Normal) or long (Extended) for you to enter or exit the vehicle more comfortably. If you change the ignition key or ENGINE START/STOP Button from OFF to ACC position, the driver's seat will return to the original position. ❈ For more details, refer to "Driver Position Memory System" on page 4-11.
Welcome Mirror/Light	• If this item checked, the Welcome Mirror/Light will be activated.
Wireless Charging System	• If this item checked, the wireless charging system in the front seat will be activated.
Wiper/Lights Display	• If this item checked, the Wiper/Lights Display will be activated.
Auto Rear Wiper (in R)	• If this item checked, the Auto rear wiper will be activated.
Gear Position Pop-up	• If this item is checked, the Gear position pop-up display will be activated.
Coasting Guide	• Enable Coasting Guide : To activate or deactivate the Coasting guide. • Sound : To activate or deactivate the Coasting guide sound.
Start coasting	• Choose the initial guiding time for Coasting guide. (Early/Normal/Late)
Icy road warning	• If this item is checked, the Icy road warning display will be activated.
Rear Occupant Alert	• If this item is checked, the Rear Occupant Alert (ROA) display will be activated.

❈ The information provided may differ depending on which functions are applicable to your vehicle.

6. Service interval

Items	Explanation
Enable Service Interval	If this item is checked, the Service Interval function will be activated.
Adjust Interval	If the service interval menu is activated, you may adjust the time and distance.
Reset	To reset the service interval function.

If the service interval is activated and the time and distance is adjusted, messages are displayed in the following situations each time the vehicle is turned on.

- Service in: Displayed to inform the driver the remaining mileage and days to service.
- Service required: Displayed when the mileage and days to service has been reached or passed.

If any of the following conditions occur, the mileage and number of days to service may be incorrect.

- The battery cable is disconnected.
- The battery is discharged.
- The fuse switch is turned off.

7. Other (if equipped)

Items	Explanation
AUX. Battery Saver+ (if equipped)	• If this item is checked, the Aux. Battery Saver+ function will be activated.
Fuel Economy Reset	• If this item checked, the average fuel economy will reset automatically after refueling or after ignition. ❈ For more details, refer to "Trip Computer" on page 5-74.
Speed Unit	• km/h, MPH To select Speed unit.
Fuel Economy Unit	• km/L, L/100km, US gallon, UK gallon To select the Fuel economy unit.
Temperature Unit	• °C/°F To select the Temperature unit.
Tire Pressure Unit	• psi, kPa, bar To select the Tire Pressure Unit.

❈ The information provided may differ depending on which functions are applicable to your vehicle.

8. Language (if equipped)

Items	Explanation
Language	• To select language.

9. Reset

Items	Explanation
Reset	You can reset the menus in the User Settings mode. All menus in the User Settings mode are reset to factory settings, except language and service interval.

Trip information (trip computer)

The trip computer is a microcomputer-controlled driver information system that displays information related to driving.

✻ NOTICE

Some driving information stored in the trip computer (for example Average Vehicle Speed) resets if the battery is disconnected.

Trip modes

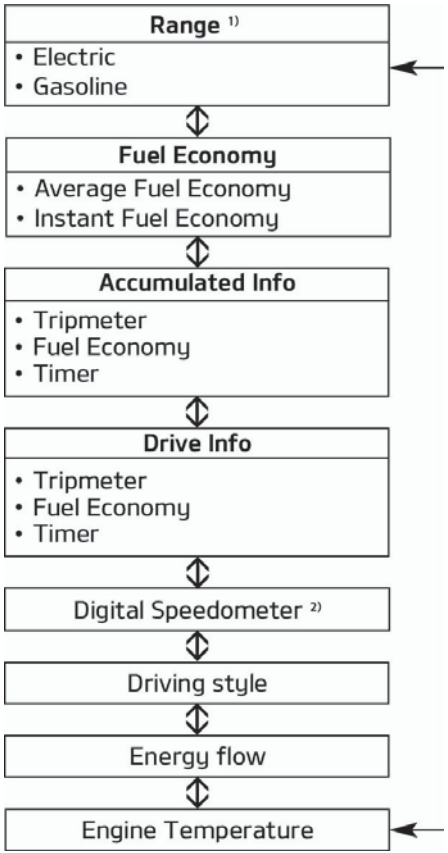

1) : for Plug-in hybrid
2) : for Type A cluster

To change the trip mode, scroll the MOVE scroll switch (∧/∨) in the trip computer mode.

Range (Plug-in hybrid)

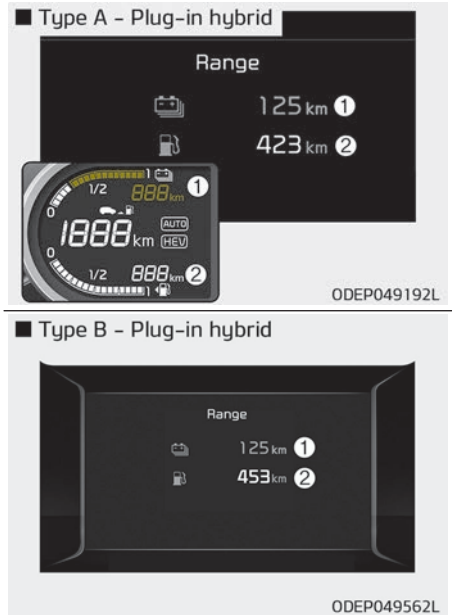

• The range is the estimated distance the vehicle can be driven with the remaining high-voltage (hybrid) battery (1, Electric) and fuel in the fuel tank (2, Gasoline).

- If the estimated distance is below 1 km (1 mi.), the trip computer will display "---" as distance to empty.
  - Distance range: 1 ~ 510 km or 1 ~ 510 mi.

✻ NOTICE

- If the vehicle is not on level ground or the battery power has been interrupted, the range function may not operate correctly.
- The range may differ from the actual driving distance as it is an estimate of the available driving distance.
- The trip computer may not register additional fuel if less than 6 liters (1.6 gallons) of fuel are added to the vehicle.
- The range may vary significantly based on driving conditions, driving habits, and condition of the vehicle.

Fuel economy

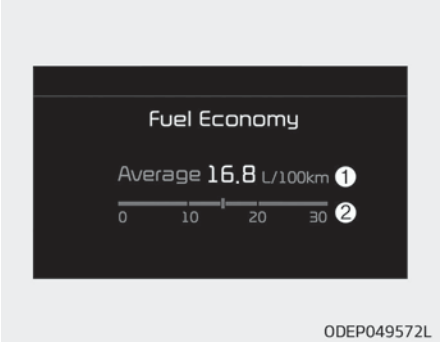

Average Fuel Economy (1)

- The average fuel economy is calculated by the total driving distance and fuel consumption since the last average fuel economy reset.
  - Fuel economy range: 0 ~ 99.9,100 ~ 999 km/L, L/100 km or MPG
- The average fuel economy can be reset both manually and automatically.

Manual reset

To clear the average fuel economy manually, press the OK button (reset) on the steering wheel for more than 1 second when the average fuel economy is displayed.

Automatic reset

To make the average fuel economy be reset automatically whenever refueling, select the "Fuel Economy Reset" mode in User Setting menu of the LCD display (Refer to "LCD Display" on page 5-62).

- OFF - You may set to default manually by using the trip switch reset button.
- After ignition - The vehicle will automatically set to default once 4 hours pass after the ignition switch or Engine start/stop button is turned to the OFF position.
- After refueling - After refueling more than 6 liters and driving over 1 km/h, the vehicle will reset to default automatically.

✻ NOTICE

The average vehicle speed is not displayed, when the vehicle drives shorter than 300 meters (0.19 miles) or less than 10 seconds after turning ON the Engine Start/Stop button.

Instant Fuel Economy (2)

- This mode displays the instant fuel economy during the last few seconds when the vehicle speed is more than 8 km/h (5 MPH).
  - Fuel economy range: 0.0 ~ 30 L/100km, km/L or 0.0 ~ 75.0 MPG

Accumulated driving information mode

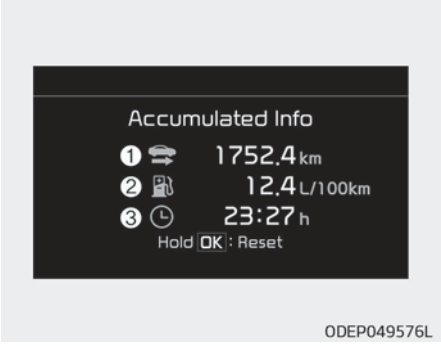

This display shows the accumulated trip distance (1), the average fuel efficiency (2), and the total driving time (3).

- Accumulated information is calculated after the vehicle has run for more than 300 meters.
- If you press "OK" button for more than 1 second after the Cumulative Information is displayed, the information will be reset.
- If the engine is running, even when the vehicle is not in motion, the information will be accumulated.

One time driving information mode

This display shows the trip distance (1), the average fuel efficiency (2), and the total driving time (3) information once per one ignition cycle.

- Fuel efficiency is calculated after the vehicle has run for more than 300 meters.
- The Driving Information will be reset 4 hours after ignition has been turned off. So, when the vehicle ignition is turned on within 4 hours, the information will not be reset.
- If the engine is running, even when the vehicle is not in motion, the information will be accumulated.

Digital speedometer (if equipped)

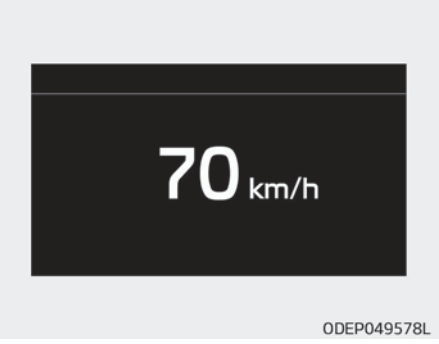

This mode displays the current speed of the vehicle.

Driving style

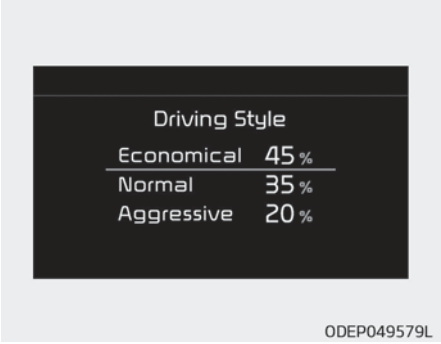

The driving style is displayed when you are driving in ECO mode.
When you drive in SPORT mode, each driving category will be displayed with "---".

Energy flow

The hybrid system informs the drivers its energy flow in various operating modes. While driving, the current energy flow is specified in 11 modes.

❊ For more details, refer to "Energy flow" on page 1-39.

Engine coolant temperature

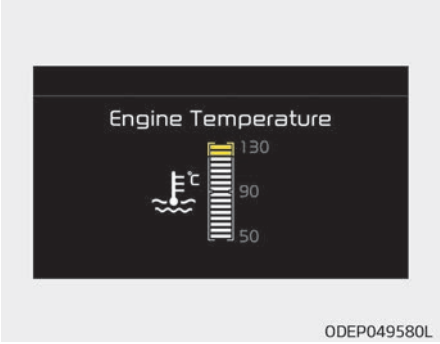

This gauge indicates the temperature of the engine coolant when the engine is running.

❊ NOTICE

When the gauge indicator gets out of the normal range, toward the "130 or H (Hot)" position, it indicates overheating of the engine. It may damage the engine.
Do not continue driving with the overheated engine.

❈ For further information, refer to “If the engine overheats” on page 7-10.

Warning messages

Warning messages appear on the LCD to warn the driver. It is located in the center of the instrument cluster.
The warning message may appear differently depending on the type of instrument cluster and some may not show the warning message at all.
The warning message is shown in either symbol, symbol and text, or text type only. You can choose the preferred language by selecting the User setting menu in LCD mode.

Door Open

• It means that any door is open.

Tailgate Open

• It means that the tailgate is open.

Hood Open

• It means that hood is open.

Sunroof Open (if equipped)

- This warning is displayed if you turn off the engine when the sunroof is open.

Lights mode

This indicator displays which exterior light is selected using the lighting control.
You can activate or deactivate Wiper/Lights Display function from the User Settings mode in the cluster LCD display.

Wiper mode

This indicator displays which wiper speed is selected using the wiper control.
You can activate or deactivate Wiper/Lights Display function from the User Settings mode in the cluster LCD display.

Turn FUSE SWITCH on (if equipped)

- This warning message illuminates if the fuse switch under the steering wheel is OFF.
- It means that you should turn the fuse switch on.

❊ For more details, refer to "Fuses" on page 8-56.

Engine Overheated

This warning message illuminates when the engine coolant temperature is above 120 °C (248 °F). This means that the engine is overheated and may be damaged.
If your vehicle is overheated, refer to "Overheating" on page 7-10.

Shift to P (for smart key system)

- This warning message illuminates if you try to turn off the engine without the shift lever in P (Park) position.
- At this time, the ENGINE START/STOP Button turns to the ACC position (If you press the ENGINE START/STOP Button once more, it will turn to the ON position).

Low key battery (for smart key system)

- This warning message illuminates if the battery of the smart key is discharged when the ENGINE START/STOP Button changes to the OFF position.

Press START button while turning wheel (for smart key system)

- This warning message illuminates if the steering wheel does not unlock normally when the ENGINE START/STOP Button is pressed.
- It means that you should press the ENGINE START/STOP Button while turning the steering wheel right and left.

Steering wheel not locked (for smart key system)

- This warning message illuminates if the steering wheel does not lock when the ENGINE START/STOP Button changes to the OFF position.

Check Steering Wheel Lock System (for smart key system)

- This warning message illuminates if the steering wheel does not lock normally when the ENGINE START/STOP Button changes to the OFF position.

Press brake pedal to start engine (for smart key system)

- This warning message illuminates if the ENGINE START/STOP Button changes to the ACC position twice by pressing the button repeatedly without depressing the brake pedal.
- It means that you should depress the brake pedal to start the engine.

Key not in vehicle (for smart key system)

- This warning message illuminates if the smart key is not in the vehicle when you press the ENGINE START/STOP Button.
- It means that you should always have the smart key with you.

Key not detected (for smart key system)

- This warning message illuminates if the smart key is not detected when you press the ENGINE START/STOP Button.

Press START button again (for smart key system)

- This warning message illuminates if you can not operate the ENGINE START/STOP Button when there is a problem with the ENGINE START/STOP Button system.
- It means that you could start the engine by pressing the ENGINE START/STOP Button once more.
- If the warning illuminates each time you press the ENGINE START/STOP Button, have the vehicle inspected by a professional workshop. Kia recommends to visit an authorized Kia dealer/service partner.

Press START button with key (for smart key system)

- This warning message illuminates if you press the ENGINE START/STOP Button while the warning message “Key not detected” is illuminating.
- At this time, the immobilizer indicator light blinks.

Check BRAKE SWITCH fuse (for smart key system)

- This warning message illuminates if the brake switch fuse is disconnected.
- It means that you should replace the fuse with a new one. If that is not possible, you can start the engine by pressing the ENGINE START/STOP Button for 10 seconds in the ACC position.

Shift to P or N to start engine (for smart key system)

- This warning message illuminates if you try to start the engine with the shift lever not in the P (Park) or N (Neutral) position.

✻ NOTICE

You can start the engine with the shift lever in the N (Neutral) position. But, for your safety, we recommend that you start the engine with the shift lever in the P (Park) position.

Low washer fluid (if equipped)

- This warning message illuminates on the service reminder mode if the washer fluid level in the reservoir is nearly empty.
- It means that you should refill the washer fluid.

Low fuel

- This warning message illuminates if the fuel tank is nearly empty.
  - When the low fuel level warning light is illuminates.

  Add fuel as soon as possible.

Device in wireless charger (if equipped)

If a smart phone is still left on the wireless charging pad unattended, even when the ENGINE START/STOP button is turned to the ACC or OFF position. And the instrument panel's one time driving information mode has finished, a warning message will lit up on the instrument panel.

✻ For more details, refer to “Smart Phone Wireless Charger” on page 5-153.

Check hybrid system

This warning message illuminates when there is a problem with the hybrid control system.
Refrain from driving when the warning message is displayed.
In this case, have the vehicle inspected by a professional workshop. Kia recommends to visit an authorized Kia dealer/service partner.

Check Hybrid system. Turn engine Off

This warning message illuminates when there is a problem with the hybrid system. The "" indicator will blink and a warning chime will sound until the problem is solved.
In this case, have the vehicle inspected by a professional workshop. Kia recommends to visit an authorized Kia dealer/service partner.

Check Hybrid system. Do not start engine.

This warning message illuminates when the hybrid battery power (SOC) level is low. A warning chime will sound until the problem is solved.
In this case, have the vehicle inspected by a professional workshop. Kia recommends to visit an authorized Kia dealer/service partner.

Stop vehicle and check power supply

This warning message illuminates when a failure occurs in the power supply system.
In this case, park the vehicle in a safe location and tow your vehicle to the nearest professional workshop and have the vehicle inspected. Kia recommends to visit an authorized Kia dealer/service partner.

Park with engine On to charge battery

This warning message illuminates when the hybrid battery power (SOC) level is low.
In this case, park the vehicle in a safe location and wait until the hybrid battery is charged.

Refuel to prevent Hybrid battery damage

This warning message illuminates when the fuel tank is nearly empty.
You should refill the fuel tank to prevent hybrid battery damage.

Refill inverter coolant

This warning message illuminates when the inverter coolant is nearly empty.
You should refill the inverter coolant.

Check brake system

This warning message illuminates when the brake performance is low or the regenerative brake does not work properly due to a failure in the brake system.
In this case, it may take longer for the brake pedal to operate and the braking distance may become longer.

Stop vehicle and check brake system

This warning message is displayed when a failure occurs in the brake system.
In this case, park the vehicle in a safe location and tow your vehicle to the nearest professional workshop and have the vehicle inspected. Kia recommends to visit an authorized Kia dealer/service partner.

Coasting guide (if equipped)

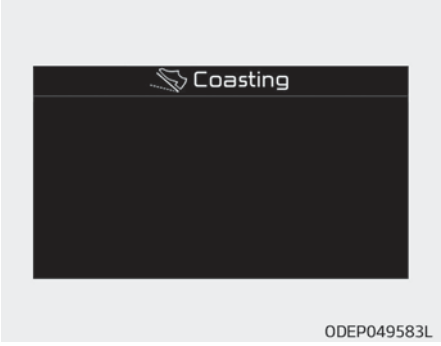

A chime will sound and the coasting guide indicator will blink four times to inform the driver when to take the foot off the accelerator by anticipating a decelerating event* based on the analysis of driving routes and road conditions stored in the navigation system. It encourages the driver to remove the foot from the pedal and allow coasting down the road with EV motor only. This helps preventing unnecessary fuel consumption and increases fuel efficiency.

❊ Example of a deceleration event is going down an extended hill, slowing down approaching a toll booth,

and approaching reduced speed zones.

- User settings
  Press the ENGINE START/STOP button and put the shift lever in P(Park). In the User Settings Mode, select Driver assistance, Coasting Guide, and then On to turn on the system. Cancel the selection of coasting guide to turn off the system. For the explanation of the system, press and hold the [OK] button.
- Operation conditions
  To activate the system, take the following procedures. Enter your destination information on the navigation and select the driving route. Select the ECO mode in the Integrated Driving Control System. Then, satisfy the following.
  - The driving speed should be between 60 km/h (37 mph) and 160 km/h (99 mph).

❈ The operating speed may vary due to difference between instrument cluster and navigation effected by tire inflation level.

Unplug vehicle to start (Plug-in hybrid)

The message is displayed when you start the engine without unplugging the charging cable. Unplug the charging cable, and then start the vehicle.

Remaining Time (Plug-in hybrid)

The message is displayed to notify the remaining time to fully charge the battery.

Shift to P to charge (Plug-in hybrid)

The message is displayed when the charging connector is plugged with the shift lever in R (Reverse), N (Neutral) or D (Drive). Move the shift lever to P (Park) and re-start the charging process.

Electric mode/Automatic mode/ Hybrid mode (Plug-in hybrid)

A corresponding message is displayed when a mode is selected by pressing the EV/HEV button.

Low battery. Maintaining Hybrid mode (Plug-in hybrid)

This message is displayed when unable to convert to EV mode even when pressing the EV/HEV button during HEV mode driving due to insufficient high-voltage (hybrid) battery level.

Low system temperature. Switching to Hybrid mode/High system temperature. Switching to Hybrid mode (Plug-in hybrid)

This message is displayed when the temperature of the high-voltage (hybrid) battery is too low or high.
This warning message is to protect the battery and the hybrid system.

Low system temperature. Maintaining Hybrid mode/High system temperature. Maintaining Hybrid mode (Plug-in hybrid)

This message is displayed when the temperature of the high-voltage (hybrid) battery is too low or too high.
This warning message is to protect the battery and the hybrid system.

Wait until fuel door opens (Plug-in hybrid)

This message is displayed when you attempt to open the fuel filler door with the fuel tank pressurized. Wait until the fuel tank is depressurized.

Fuel door open (Plug-in hybrid)

This message is displayed when the fuel filler door opens after the fuel tank is depressurized. If this message is displayed, you can refuel the fuel tank.

Charging stopped. Check the AC charger (Plug-in hybrid)

This message is displayed when the charging failed by external charger error. The purpose of this message is to let you know the error has occurred in the charger itself, not in the vehicle.

Charging stopped. Check the cable connection (Plug-in hybrid)

This message is displayed when charging is stopped because the charging connector is not correctly connected to the charging inlet. If this occur, separate the charging connector and reconnect it and check whether there is any problem (external damage, foreign substances, etc.) with the charging connector and charging inlet.

If the same problem occurs when charging the vehicle with a replaced charging cable or genuine Kia portable charger, have the vehicle inspected by a professional workshop. Kia recommends to visit an authorized Kia dealer/service partner.

Charging Door Open (Plug-in hybrid)

This message indicates that the charging door is open while in driving-ready state to encourage you to inspect and close the door. (Driving with the charging door open may result in moisture inflow or damage. This message is used to prevent such occurrences.)

Switching to Hybrid mode to allow heating or air conditioning (Plug-in hybrid)

- When the outdoor temperature is lower than -13°C (8.6°F), and you turn the climate control On for heating, the above message will be displayed in the cluster. Then, the vehicle will automatically switch to HEV mode.
- When the outdoor temperature is higher than -10°C (14°F), or you turn the climate control Off, the vehicle will automatically return to EV mode.

Switching to Hybrid mode for self-diagnosis (Plug-in hybrid)

- This message is displayed for self-diagnosis of the hybrid mode system.

WARNING AND INDICATOR LIGHTS

Warning lights

✻ NOTICE

■ Warning lights

Make sure that all warning lights are OFF after starting the engine. If any light is still ON, this indicates a situation that needs attention.

Hybrid system warning light

This warning light illuminates:

When there is a malfunction with the hybrid system.
In this case, have the vehicle inspected by a professional workshop. Kia recommends to visit an authorized Kia dealer/service partner.

Air bag warning light

This warning light illuminates:

- Once you set the ignition switch or ENGINE START/STOP Button to the ON position.
  - It illuminates for approximately 6 seconds and then goes off.
- When there is a malfunction with the SRS.
  In this case, have the vehicle inspected by a professional workshop. Kia recommends to visit an authorized Kia dealer/service partner.

Seat belt warning light

This warning light informs the driver that the seat belt is not fastened.
For more details, refer to “Seat Belts” on page 4-17.

Parking brake & brake fluid warning light

This warning light illuminates:

- Once you set the ignition switch or ENGINE START/STOP Button to the ON position.
  - It illuminates for approximately 3 seconds
  - It remains on if the parking brake is applied.
- When the parking brake is applied.
- When the brake fluid level in the reservoir is low.
  - If the warning light illuminates with the parking brake released, it indicates the brake fluid level in reservoir is low.

If the brake fluid level in the reservoir is low:

1. Drive carefully to the nearest safe location and stop your vehicle.
2. With the engine stopped, check the brake fluid level immediately and add fluid as required (For more details, refer to “Brake fluid” on page 8-33). Then check all brake components for fluid leaks. If any leak on the brake system is still found, the warning light remains on, or the brakes do not operate properly, do not drive the vehicle.
   In this case, have the vehicle towed to a professional workshop and inspected. Kia recommends to visit an authorized Kia dealer/service partner.

Dual-diagonal braking system

Your vehicle is equipped with dual-diagonal braking systems. This means you still have braking on two wheels even if one of the dual systems should fail.
With only one of the dual systems working, more than normal pedal travel and greater pedal pressure are required to stop the vehicle.

Also, the vehicle will not stop in as short a distance with only a portion of the brake system working.
If the brakes fail while you are driving, shift to a lower gear for additional engine braking and stop the vehicle as soon as it is safe to do so.

⚠ CAUTION

■ Parking Brake & Brake Fluid Warning Light

Driving the vehicle with a warning light ON is dangerous. If the Parking Brake & Brake Fluid Warning Light illuminates with the parking brake released, it indicates that the brake fluid level is low.
In this case, have the vehicle inspected by a professional workshop. Kia recommends to visit an authorized Kia dealer/service partner.

Regenerative brake warning light

This warning light illuminates:

When the regenerative brake does not operate and the brake does not perform well. This causes the Brake Warning light (red) and Regenerative Brake Warning Light (yellow) to illuminate simultaneously.
In this case, drive safely and have the vehicle inspected by a professional workshop. Kia recommends to visit an authorized Kia dealer/service partner.
The operation of the brake pedal may be more difficult than normal and the braking distance can increase.

Anti-lock brake system (ABS) warning light

This warning light illuminates:

- Once you set the ignition switch or ENGINE START/STOP Button to the ON position.
  - It illuminates for approximately 3 seconds and then goes off.
- When there is a malfunction with the ABS (The normal braking system will still be operational without the assistance of the anti-lock brake system).
  In this case, have the vehicle inspected by a professional workshop. Kia recommends to visit an authorized Kia dealer/service partner.

Electronic brake force distribution (EBD) system warning light

These two warning lights illuminate at the same time while driving:

- When the ABS and regular brake system may not work normally.
  In this case, have the vehicle inspected by a professional workshop. Kia recommends to visit an authorized Kia dealer/service partner.

⚠ WARNING

■ Electronic Brake force Distribution (EBD) System Warning Light

(Continued)

(Continued)

When both ABS and Parking Brake & Brake Fluid Warning Lights are on, the brake system will not work normally and you may experience an unexpected and dangerous situation during sudden braking.
In this case, avoid high speed driving and abrupt braking.
Have the vehicle inspected by a professional workshop as soon as possible. Kia recommends to visit an authorized Kia dealer/service partner.

✻ NOTICE

■ Electronic Brake force Distribution (EBD) System Warning Light

When the ABS Warning Light is on or both ABS and Parking Brake & Brake Fluid Warning Lights are on, the speedometer, odometer, or tripmeter may not work. Also, the EPS Warning Light may illuminate and

(Continued)

(Continued)

the steering effort may increase or decrease.
In this case, have the vehicle inspected by a professional workshop as soon as possible. Kia recommends to visit an authorized Kia dealer/service partner.

Electric Power Steering (EPS) warning light

This warning light illuminates:

- Once you set the ignition switch or ENGINE START/STOP Button to the ON position.
  - It remains on until the engine is started.
- When there is a malfunction with the EPS.
  In this case, have the vehicle inspected by a professional workshop. Kia recommends to visit an authorized Kia dealer/service partner.

Malfunction indicator lamp (MIL)

This warning light illuminates:

- Once you set the ignition switch or ENGINE START/STOP Button to the ON position.
  - It remains on until the engine is started.
- When there is a malfunction with the emission control system.
  In this case, have the vehicle inspected by a professional workshop. Kia recommends to visit an authorized Kia dealer/service partner.

⚠ CAUTION

■ **Malfunction Indicator Lamp (MIL)**

Driving with the Malfunction Indicator Lamp (MIL) on may cause damage to the emission control systems which could affect drivability and/or fuel economy.

⚠ CAUTION

■ Gasoline engine

If the Malfunction Indicator Lamp (MIL) illuminates, potential catalytic converter damage is possible which could result in loss of engine power. In this case, have the vehicle inspected by a professional workshop as soon as possible. Kia recommends to visit an authorized Kia dealer/service partner.

Charging system warning light

This warning light illuminates:

- Once you set the ignition switch or ENGINE START/STOP Button to the ON position.
  - It remains on until the engine is started.
- When there is a malfunction with either the alternator or electrical charging system.

If there is a malfunction with either the alternator or electrical charging system:

1. Drive carefully to the nearest safe location and stop your vehicle.
2. Turn the engine off and check the alternator drive belt for looseness or breakage.
   If the belt is adjusted properly, there may be a problem in the electrical charging system.
   In this case, have the vehicle inspected by a professional workshop as soon as possible. Kia recommends to visit an authorized Kia dealer/service partner.

Engine Oil Pressure Warning Light

This warning light illuminates:

- Once you set the ignition switch or ENGINE START/STOP Button to the ON position.
  - It remains on until the engine is started.
- When the engine oil pressure is low.

If the engine oil pressure is low:

1. Drive carefully to the nearest safe location and stop your vehicle.
2. Turn the engine off and check the engine oil level (for more details, refer to "Engine oil" on page 8-27). If the level is low, add oil as required.
   If the warning light remains on after adding oil or if oil is not available, have the vehicle inspected by a professional workshop as soon as possible. Kia recommends to visit an authorized Kia dealer/service partner.

⚠ CAUTION

■ Engine Oil Pressure Warning Light

- **If the engine does not stop immediately after the Engine Oil Pressure Warning Light is illuminated, severe damage could result.**
- **If the warning light stays on while the engine is running, it indicates that there may be serious engine damage or malfunction. In this case,**
  1. Stop the vehicle as soon as it is safe to do so.

(Continued)

(Continued)

2. **Turn off the engine and check the oil level. If the oil level is low, fill the engine oil to the proper level.**
3. **Start the engine again. If the warning light stays on after the engine is started, turn the engine off immediately. In this case, have the vehicle inspected by a professional workshop. Kia recommends to visit an authorized Kia dealer/service partner.**

Low Fuel Level Warning Light

This warning light illuminates:

When the fuel tank is nearly empty.

Add fuel as soon as possible.

⚠ CAUTION

■ Low Fuel Level

(Continued)

(Continued)

Driving with the Low Fuel Level warning light on or with the fuel level below "0 or E" can cause the engine to misfire and damage the catalytic converter (if equipped).

Low Tire Pressure Warning Light (if equipped)

This warning light illuminates:

- Once you set the ignition switch or ENGINE START/STOP Button to the ON position.
  - It illuminates for approximately 3 seconds and then goes off.
- When one or more of your tires are significantly underinflated.

❊ For more details, refer to "Tire Pressure Monitoring System (TPMS)" on page 7-11.

This warning light remains on after blinking for approximately 70 seconds or repeats blinking and off at the intervals of approximately 4 seconds:

- When there is a malfunction with the TPMS.

In this case, have the vehicle inspected by a professional workshop as soon as possible. Kia recommends to visit an authorized Kia dealer/service partner.

❊ For more details, refer to "Tire Pressure Monitoring System (TPMS)" on page 7-11.

⚠ WARNING

■ Low tire pressure

- **Significantly low tire pressure makes the vehicle unstable and can contribute to loss of vehicle control and increased braking distances.**
- **Continued driving or low pressure tires will cause the tires to overheat and fail.**

⚠ WARNING

■ Safe Stopping

(Continued)

(Continued)

- **The TPMS cannot warn you to severe and sudden tire damage caused by external factors.**
- **If you notice any vehicle instability, immediately take your foot off the accelerator pedal, apply the brakes gradually with light force, and slowly move to a safe position off the road.**

Master warning light

- This warning light informs the driver the following situations
  - Forward Collision-Avoidance Assist malfunction (if equipped)
  - Forward Collision-Avoidance Assist front radar is blocked. (if equipped)
  - Blind-Spot Collision Warning malfunction (if equipped)
  - Blind-Spot Collision Warning radar blocked (if equipped)
  - Intelligent Speed Limit Warning malfunction (if equipped)
  - High Beam Assist malfunction (if equipped)
  - Smart Cruise Control malfunction (if equipped)
  - Smart Cruise front radar is blocked. (if equipped)
  - Lane Following Assist malfunction (if equipped), etc.
  - Lamp malfunction
  - LED headlamp malfunction (if equipped)
  - Tire Pressure Monitoring System (TPMS) malfunction (if equipped)

The Master Warning Light illuminates when more than one of the above warning situations occur. If the warning situation is solved, the mas ter warning light will turn off.

Engine coolant temperature warning light

This warning light illuminates:

- When the engine coolant temperature is above 120 °C (248 °F). This means that the engine is overheated and may be damaged.
  If your vehicle is overheated, refer to "Overheating" on page 7-10.

⚠ CAUTION

■ Engine overheating

Do not continue driving with the engine overheated. Otherwise engine may be damaged.

Overspeed warning light (if equipped)

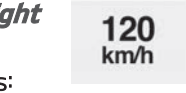

This warning light blinks:

- When you drive the vehicle more than 120 km/h.
  - This is to prevent you from driving your vehicle with overspeed.
  - The overspeed warning chime also sound for approximately 5 seconds.

Electronic Parking Brake (EPB) warning light (if equipped)

This warning light illuminates:

- Once you set the ENGINE START/STOP Button to the ON position.
  - It illuminates for approximately 3 seconds and then goes off.

- When there is a malfunction with EPB.
  In this case, have the vehicle inspected by a professional workshop. Kia recommends to visit an authorized Kia dealer/service partner.

❊ NOTICE

■ Electronic Parking Brake (EPB) Warning Light

The Electronic Parking Brake (EPB) Warning Light may illuminates when Electronic Stability control (ESC) Indicator Light comes on to indicates that ESC is not working properly (This does not indicate malfunction of EPB).

LED headlamp warning light (if equipped)

This warning light illuminates:

- Once you set the ENGINE START/STOP Button to the ON position.
  - It illuminates for approximately 3 seconds and then goes off.
- When there is a malfunction with the LED headlamp.
  In this case, have the vehicle inspected by a professional workshop. Kia recommends to visit an authorized Kia dealer/service partner.

⚠ CAUTION

■ LED Headlamp Warning Light

Continuous driving with the LED Headlamp Warning Light on can reduce LED headlamp (low beam) life.

Forward Safety warning light (if equipped)

This warning light illuminates:

- Once you set the ignition switch or ENGINE START/STOP button to the ON position.
  - Forward Safety warning light illuminates for approximately 3 seconds and then turns off.
- When there is a malfunction with Forward Safety.
  If this occurs, have the vehicle inspected by a professional work shop. Kia recommends to visit an authorized Kia dealer/service partner.

❊ For more details, refer to "Forward Collision-Avoidance Assist (FCA)" on page 6-48.

Indicator lights

Charging Cable Connection Indicator (Plug-in hybrid)

This indicator illuminates in red when the charging cable is connected.

Electronic Stability Control (ESC) indicator light

This indicator light illuminates:

- Once you set the ignition switch or ENGINE START/STOP Button to the ON position.
  - It illuminates for approximately 3 seconds and then goes off.
- When there is a malfunction with ESC.
  In this case, have the vehicle inspected by a professional workshop. Kia recommends to visit an authorized Kia dealer/service partner.

This indicator light blinks:

While ESC is operating.

For more details, refer to “Electronic Stability Control (ESC)” on page 6-41.

Electronic Stability Control (ESC) OFF indicator light

This indicator light illuminates:

- Once you set the ignition switch or ENGINE START/STOP Button to the ON position.
  - It illuminates for approximately 3 seconds and then goes off.
- When you deactivate ESC by pressing the ESC OFF button.

For more details, refer to “Electronic Stability Control (ESC)” on page 6-41.

Immobilizer indicator light (without smart key) (if equipped)

This indicator light illuminates:

- When the vehicle detects the immobilizer in your key properly while the ignition switch is ON.
  - At this time, you can start the engine.
  - The indicator light goes off after starting the engine.

This indicator light blinks:

- When there is a malfunction with the immobilizer system.
  In this case, have the vehicle inspected by a professional workshop. Kia recommends to visit an authorized Kia dealer/service partner.

Immobilizer indicator light (with smart key) (if equipped)

This indicator light illuminates for up to 30 seconds:

- When the vehicle detects the smart key in the vehicle properly while the ENGINE START/STOP Button is ACC or ON.
  - At this time, you can start the engine.
  - The indicator light goes off after starting the engine.

This indicator light blinks for a few seconds:

- When the smart key is not in the vehicle.
  - At this time, you can not start the engine.

This indicator light illuminates for 2 seconds and goes off:

- When the vehicle can not detect the smart key which is in the vehicle while the ENGINE START/STOP Button is ON.
  In this case, have the vehicle inspected by a professional workshop. Kia recommends to visit an authorized Kia dealer/service partner.

This indicator light blinks:

- When the battery of the smart key is weak.
  - At this time, you can not start the engine. However, you can start the engine if you press the ENGINE START/STOP Button with the smart key. (For more details, refer to “Starting the engine” on page 6-09).
- When there is a malfunction with the immobilizer system.
  In this case, have the vehicle inspected by a professional workshop. Kia recommends to visit an authorized Kia dealer/service partner.

Turn signal indicator light

This indicator light blinks:

- When you turn the turn signal light on.

If any of the following occurs, there may a malfunction with the turn signal system.

- The indicator light does not blink but illuminates.
- The indicator light blinks more rapidly.
- The indicator light does not illuminate at all.

In this case, have the vehicle inspected by a professional workshop. Kia recommends to visit an authorized Kia dealer/service partner.

Low beam indicator light (if equipped)

This indicator light illuminates:

- When the headlights are on.

High beam indicator light

This indicator light illuminates:

- When the headlights are on and in the high beam position
- When the turn signal lever is pulled into the Flash-to-Pass position.

Light ON indicator light

This indicator light illuminates:

- When the tail lights or headlights are on.

Front fog indicator light (if equipped)

This indicator light illuminates:

- When the front fog lights are on.

Rear Fog Indicator Light (if equipped)

This indicator light illuminates:

- When the rear fog lights are on.

High Beam Assist indicator (if equipped)

This warning light illuminates:

- When the high beam is on with the light switch in the AUTO light position.
- If your vehicle detects oncoming or preceding vehicles, High Beam Assist will switch the high beam to low beam automatically.

❈ For more details, refer to "High beam assist" on page 5-111.

EV mode indicator

This indicator illuminates when the vehicle is driven by the electric motor.

Ready indicator

This indicator illuminates:

When the vehicle is ready to be driven.

- ON: Normal driving is possible.
- OFF: Normal driving is not possible, or a problem has occurred.
- Blinking: Emergency driving.

When the ready indicator goes OFF or blinks, there is a problem with the system. In this case, have the vehicle inspected by a professional workshop. Kia recommends to visit an authorized Kia dealer/service partner.

AUTO HOLD Indicator Light (if equipped)

This indicator light illuminates:

- [White] When you activate the auto hold system by pressing the AUTO HOLD button.
- [Green] When you stop the vehicle completely by depressing the brake pedal with the auto hold system activated.

- [Yellow] When there is a malfunction with the auto hold system.
  In this case, have the vehicle inspected by a professional workshop. Kia recommends to visit an authorized Kia dealer/service partner.

❊ For more details, refer to "Auto Hold" on page 6-36.

Lane Safety indicator (if equipped)

This indicator light illuminates:

- [Green] When the function operating conditions are satisfied.
- [White] The function operating conditions are not satisfied.
- [Yellow] When there is a malfunction with lane keeping assist.

In this case, have the vehicle inspected by a professional workshop as soon as possible. Kia recommends to visit an authorized Kia dealer/service partner.

❊ For more details, refer to "Lane keeping assist (LKA)" on page 6-62.

SPORT mode indicator light (if equipped)

This indicator light illuminates:

- When you select "SPORT" mode as drive mode.

❊ For more details, refer to "Dual clutch transmission" on page 6-16.

ECO mode indicator light (if equipped)

This indicator light illuminates:

- When you select "ECO" mode as drive mode.

❊ For more details, refer to "Dual clutch transmission" on page 6-16.

Exhaust system (GPF) warning light (Gasoline Engine) (if equipped)

When accumulated soot reaches a certain amount.

This warning light illuminates:

- When this warning light illuminates, it may turn off after driving the vehicle:
  - The vehicle should be driven for more than 30 minutes at a speed of at more than 80 km/h (50 mph) and faster.
- Ensure the following conditions are all met: safe road conditions, transmission 3rd gear or above, and engine speed of 1,500 -4,000 rpm.

If this warning light blinks in spite of the procedure (at this time the LCD warning message will be displayed), have the GPF system checked by a professional workshop. Kia recommends to visit an authorized Kia dealer/ service partner.

⚠ CAUTION

■ Gasoline Engine with GPF (if equipped)

If you continue to drive with the GPF warning light blinking for a long time, the GPF system can be damaged and fuel consumption can worsen.

REAR VIEW MONITOR (RVM) (IF EQUIPPED)

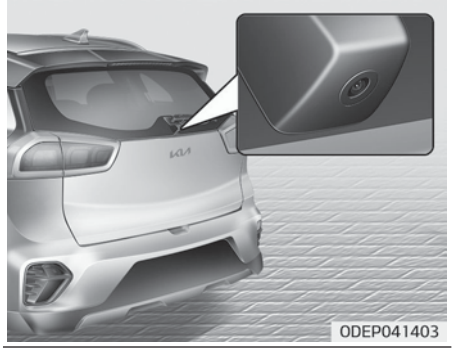

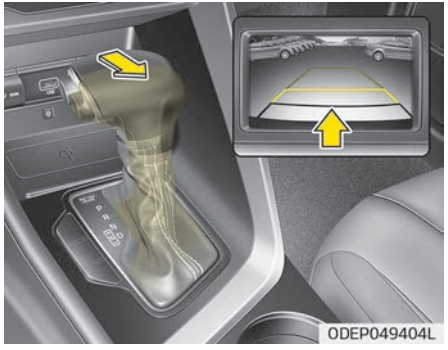

Rear View Monitor will activate when the back-up light is ON with the ignition switch ON and the shift lever in the R (Reverse) position.

This function is a supplemental function that shows behind the vehicle through the Infotainment function while backing-up.

⚠ WARNING

- **This function is a supplementary function only. It is the responsibility of the driver to always check the inside/outside rearview mirror and the area behind the vehicle before and while backing up because there is a dead zone that can't be seen by the camera.**
- **If the camera lens is covered with foreign material, the Rear View Monitor may not operate normally.**
  Always keep the camera lens clean.
  However, do not use chemical solvents such as strong detergents containing high alkaline or volatile organic solvents (gasoline, acetone etc.). This may damage the camera lens.

❊ If your vehicle is equipped with Infotainment system, Rear View Monitor will show behind the vehicle through the Infotainment system monitor while backing-up. Refer to a separately supplied manual for detailed information.

Rear View While Driving (if equipped)

■ Hybrid

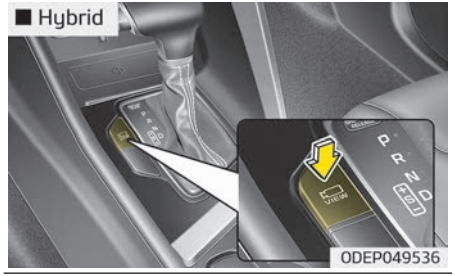

■ Plug-in hybrid

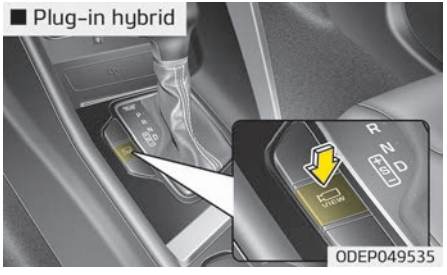

Rear View While Driving will activate when the back-up light is ON with the ignition switch ON and the shift lever in the R (Reverse) position. Driving Rear View assists you to drive safely by allowing you to check the rear view through the screen while driving.
The function is activated when:
- The engine is ON
- The shift lever is in D (Drive) or N (Neutral) and you press the Parking/View button.

The function is deactivated when:
- You press the Parking/View button again.
- You press the audio or Infotainment system button.

When the vehicle is reversing the screen switches to Rear View screen.
Warning indicator in the screen is indicated when:
- The trunk/tailgate is open.
- The driver/passenger's door is open.

⚠ WARNING

- **Rear View While Driving is a supplementary driving assist function. Make sure to check the rear view directly for safety. What you see on the screen may differ from the actual vehicle's location.**
- **The camera may not operate properly if any foreign substance is on the rear camera lens. Always keep the lens clean.**
- **When the rear view is displayed while driving, an icon is indicated on the upper right side of the screen.**

REVERSE PARKING DISTANCE WARNING (PDW) (IF EQUIPPED)

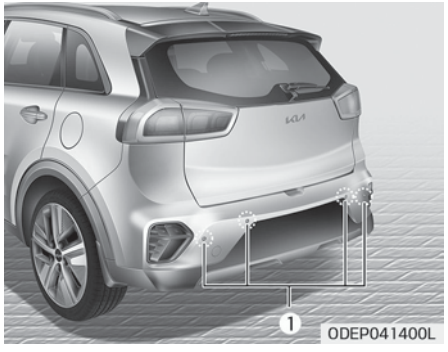

The reverse parking distance warning assists the driver during backward movement of the vehicle by chiming if any object is sensed within a distance of 120 cm (48 in) behind the vehicle.
This system is a supplemental system and it is not intended to nor does it replace the need for extreme care and attention of the driver. The sensing range and objects detectable by the rear ultrasonic sensors (①) are limited. Whenever backing-up, pay as much attention to what is behind you as you would in a vehicle without a reverse parking distance warning.

⚠ WARNING

The reverse parking distance warning is a supplementary function only. The operation of the reverse parking distance warning can be affected by several factors (including environmental conditions). It is the responsibility of the driver to always check the area behind the vehicle before and while backing up.

Reverse Parking Distance Warning operation

Operating condition

- This function will activate when the indicator on the Parking Safety button (if equipped) is not illuminated. If you desire to deactivate the reverse parking distance warning, press the Parking Safety button (if equipped) again. (The indicator on the button will illuminate.) To turn the system on, press the button (if equipped) again. (The indicator on the button will go off.)
- This system will activate when backing up with the ignition switch ON.
  If the vehicle is moving at a speed over 5 km/h (3 mph), the system may not be activated correctly.
- The sensing distance while the reverse parking distance warning is in operation is approximately 120 cm (48 in).
- When more than two objects are sensed at the same time, the closest one will be recognized first.

Types of warning sound	Indicator*
When an object is 120 cm to 60 cm (48 in to 24 in) from the rear bumper: Buzzer beeps intermittently.	
When an object is 60 cm to 30 cm (24 in to 12 in) from the rear bumper: Buzzer beeps more frequently.	

* : if equipped

Types of warning sound	Indicator*
When an object is within 30 cm (12 in) of the rear bumper: Buzzer sounds continuously.	

* : if equipped

✻ NOTICE

The indicator may differ from the illustration as objects or sensors status.
If the indicator blinks, have the system checked by a professional workshop. Kia recommends to visit an authorized Kia dealer/service partner.

Reverse Parking Distance Warning not operation

Rear Parking Distance Warning may not operate properly when:

1. Moisture is frozen to the sensor. (It will operate normally when the moisture has been cleared.)
2. The sensor is covered with foreign matter, such as snow or water, or the sensor cover is blocked. (It will operate normally when the material is removed or the sensor is no longer blocked.)
3. Driving on uneven road surfaces (unpaved roads, gravel, bumps, gradient).
4. Objects generating excessive noise (vehicle horns, loud motorcycle engines, or truck air brakes) are within range of the sensor.
5. Heavy rain or water spray exists.
6. Wireless transmitters or mobile phones are within range of the sensor.
7. The sensor is covered with snow.
8. Trailer towing

The detecting range may decrease when:

1. The sensor is stained with foreign matter such as snow or water. (The sensing range will return to normal when removed.)
2. Outside air temperature is extremely hot or cold.

The following objects may not be recognized by the sensor:

1. Sharp or slim objects such as ropes, chains or small poles.
2. Objects which tend to absorb the sensor frequency such as clothes, spongy material or snow.
3. Undetectable objects smaller than 100 cm (40 in) in height and narrower than 14 cm (6 in) in diameter.

Rear Parking Distance Warning precautions

- Rear Parking Distance Warning may not sound consistently depending on the speed and shapes of the objects detected.
- Rear Parking Distance Warning may malfunction if the vehicle bumper height or sensor installation has been modified or damaged. Any non-factory installed equipment or accessories may also interfere with the sensor performance.
- The sensor may not recognize objects less than 30 cm (12 in) from the sensor, or it may sense an incorrect distance. Use caution.

- When the sensor is frozen or stained with snow, dirt, or water, the sensor may be inoperative until the stains are removed using a soft cloth.
- Do not push, scratch or strike the sensor. Sensor damage could occur.

✻ NOTICE

This function can only sense objects within the range and location of the sensors; It can not detect objects in other areas where sensors are not installed. Also, small or slim objects, such as poles or objects located between sensors may not be detected by the sensors.
Always visually check behind the vehicle when backing up.
Be sure to inform any drivers of the vehicle that may be unfamiliar with the function regarding the function capabilities and limitations.

⚠ WARNING

Pay close attention when the vehicle is driven close to objects on the road, particularly pedestrians, and especially children. Be aware that some objects may not be detected by the sensors, due to the object's distance, size or material, all of which can limit the effectiveness of the sensor. Always perform a visual inspection to make sure the vehicle is clear of all obstructions before moving the vehicle in any direction.

Self-diagnosis

If you don't hear an audible warning sound or if the buzzer sounds intermittently when shifting the gear to the R (Reverse) position, this may indicate a malfunction in Rear Parking Distance Warning. If this occurs, have the system checked by a professional workshop. Kia recommends to visit an authorized Kia dealer/service partner.

⚠ WARNING

Your new vehicle warranty does not cover any accidents or damage to the vehicle or injuries to its occupants due to Rear Parking Distance Warning malfunction. Always drive safely and cautiously.

FORWARD/REVERSE PARKING DISTANCE WARNING (PDW) (IF EQUIPPED)

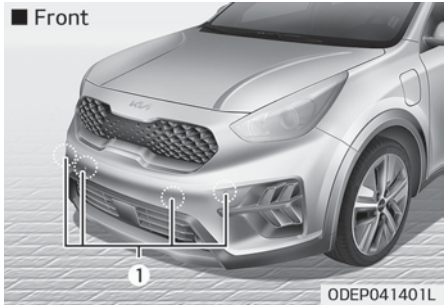

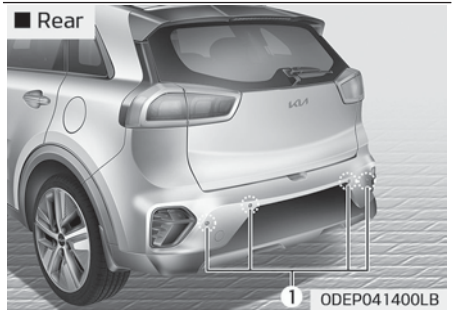

Forward/Reverse Parking Distance Warning assists the driver during movement of the vehicle by chiming if any object is sensed within the distance of 100 cm (40 in) in front and 120 cm (48 in) behind the vehicle.

This function is a supplemental function and it is not intended to nor does it replace the need for extreme care and attention of the driver.
The sensing range and objects detectable by the sensors (①) are limited. Whenever moving pay as much attention to what is in front and behind of you as you would in a vehicle without Forward/Reverse Parking Distance Warning.

⚠ WARNING

Forward/Reverse Parking Distance Warning should only be considered as a supplementary function. The driver must check the front and rear view. The operational function of Forward/Reverse Parking Distance Warning can be affected by many factors and conditions of the surroundings, so the responsibility rests always with the driver.

Forward/Reverse Parking Distance Warning operation

Operating condition

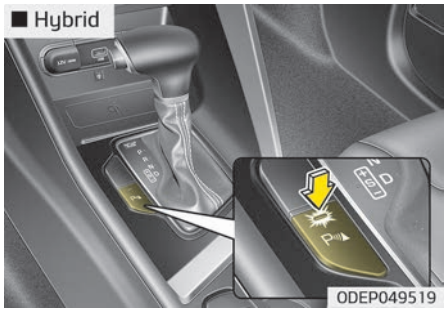

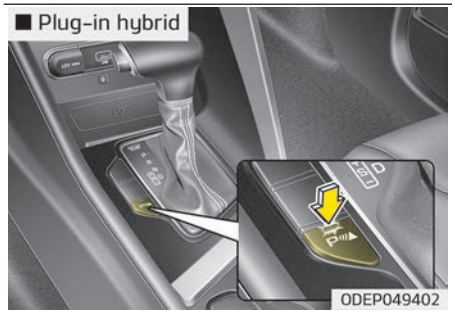

- This function activates when the Parking Safety button is pressed with the ignition switch ON.

- The indicator of the Parking Safety button turns on automatically and activates Forward/Reverse Parking Distance Warning when you shift the gear to the R (Reverse) position.
- The sensing distance while backing up is approximately 120 cm (48 in) when you are driving less than 20 km/h (12 mph).
- The sensing distance while moving forward is approximately 100 cm (40 in) when you are driving less than 10 km/h (6 mph).
- When more than two objects are sensed at the same time, the closest one will be recognized first.
- The front outer sensors are activated when you shift the gear to the R (Reverse) position.
- If the vehicle speed is above 10 km/h (6 mph), the function is not activate, and Forward/Reverse Parking Distance Warning will turn off when you drive above 20 km/h (12 mph). To activate the function again, press the Parking Safety button.

✻ NOTICE

It may not operate if it's distance from the object is already less than approximately 25 cm (10 in) when the function is ON.

Type of warning indicator and sound

Distance from object		Warning indicator		Warning sound
		When driving forward	When driving backward	
100 cm ~ 61 cm	Front		-	Buzzer beeps intermittently
120 cm ~ 61cm	Rear	-		Buzzer beeps intermittently
60 cm ~ 31cm	Front			Buzzer beeps frequently
	Rear	-		Buzzer beeps frequently
30 cm	Front			Buzzer sounds continuously
	Rear	-		Buzzer sounds continuously

✻ NOTICE

- The actual warning sound and indicator may differ from the illustration according to objects or sensor status.
- Do not wash the vehicle's sensor with high pressure water.

⚠ CAUTION

- **This function can only sense objects within the range and location of the sensors;**
  It cannot detect objects in other areas where sensors are not installed. Also, small or slim objects, such as poles or objects located between sensors may not be detected by the sensors.
  Always visually check behind the vehicle when backing up.
- **Be sure to inform any drivers of the vehicle that may be unfamiliar with the function regarding the function capabilities and limitations.**

Forward/Reverse Parking Distance Warning not operation

Forward/Reverse Parking Distance Warning may not operate normally when:

1. Moisture is frozen to the sensor. (It will operate normally when moisture melts.)
2. Sensor is covered with foreign matter, such as snow or water, or the sensor cover is blocked. (It will operate normally when the material is removed or the sensor is no longer blocked.)
3. Sensor is stained with foreign matter such as snow or water. (Sensing range will return to normal when removed.)
4. The Parking Safety button is off.

There is a possibility of Forward/Reverse Parking Distance Warning malfunction when:

1. Driving on uneven road surfaces such as unpaved roads, gravel, bumps, or gradient.
2. Objects generating excessive noise such as vehicle horns, loud motorcycle engines, or truck air brakes can interfere with the sensor.
3. Heavy rain or water spray.
4. Wireless transmitters or mobile phones present near the sensor.
5. Sensor is covered with snow.

Detecting range may decrease when:

1. Outside air temperature is extremely hot or cold.
2. Undetectable objects smaller than 100 cm (40 in) and narrower than 15 cm (6 in) in diameter.

The following objects may not be recognized by the sensor:

1. Sharp or slim objects such as ropes, chains or small poles.
2. Objects, which tend to absorb sensor frequency such as clothes, spongy material or snow.

✻ NOTICE

1. The warning may not sound sequentially depending on the speed and shapes of the objects detected.
2. Forward/Reverse Parking Distance Warning may malfunction if the vehicle bumper height or sensor installation has been modified. Any non-factory installed equipment or accessories may also interfere with the sensor performance.
3. Sensor may not recognize objects less than 30 cm from the sensor, or it may sense an incorrect distance. Use with caution.
4. When the sensor is frozen or stained with snow or water, the sensor may be inoperative until the stains are removed using a soft cloth.

(Continued)

(Continued)

5. Do not push, scratch or strike the sensor with any hard objects that could damage the surface of the sensor. Sensor damage could occur.

✻ NOTICE

This function can only sense objects within the range and location of the sensors, it can not detect objects in other areas where sensors are not installed. Also, small or slim objects, or objects located between sensors may not be detected.
Always visually check in front and behind the vehicle when driving.
Be sure to inform any drivers in the vehicle that may be unfamiliar with the function regarding the function capabilities and limitations.

⚠ WARNING

Pay close attention when the vehicle is driven close to objects on the road, particularly pedestrians, and especially children. Be aware that some objects may not be detected by the sensors, due to the objects distance, size or material, all of which can limit the effectiveness of the sensor. Always perform a visual inspection to make sure the vehicle is clear of all obstructions before moving the vehicle in any direction.

Self-diagnosis

When you shift the gear to the R (Reverse) position and if one or more of the below occurs you may have a malfunction in Forward/Reverse Parking Distance Warning.

- You don't hear an audible warning sound or if the buzzer sounds intermittently.
-

is displayed. (if equipped).

If this occurs, have the system checked by a professional workshop. Kia recommends to visit an authorized Kia dealer/service partner.

⚠ WARNING

Your new vehicle warranty does not cover any accidents or damage to the vehicle or injuries to its occupants related to Forward/Reverse Parking Distance Warning. Always drive safely and cautiously.

LIGHTING

Battery saver function

The purpose of this feature is to prevent the battery from being discharged if the lights are left in the ON position. The system automatically shuts off the parking lights after the engine is off and the driver's door is opened.
However, the position lamps stay ON even when the driver-side door is opened if the light switch is operated after the engine is turned off.
If necessary, to keep the lamps on turn the position lamps OFF and ON again using the headlamp switch on the steering column after the engine is turned off.

⚠ CAUTION

If the driver gets out of the vehicle through other doors (except driver's door), the battery saver function does not operate. Therefore, It causes the battery to be discharged. In this case, make sure to turn off the lamp before getting out of the vehicle.

Headlight escort function (if equipped)

If you turn the ignition switch to the ACC or OFF position with the headlights ON, the headlights remain on for about 5 minutes. However, if the driver's door is opened and closed, the headlights are turned off after 15 seconds.
The headlights can be turned off by pressing the lock button on the transmitter (or smart key) twice or turning the light switch to the OFF position.

Daytime running light

The Daytime Running Lights (DRL) can make it easier for others to see the front of your vehicle during the day. DRL can be helpful in many different driving conditions, and it is especially helpful after dawn and before sunset.
The DRL system turns OFF when:

1. The headlight switch is on
2. The engine is off
3. The front fog light is on.

❊ Traffic Change (For Europe)
The low beam light distribution is asymmetric. If you go abroad to a country with opposite traffic direction, this asymmetric part will dazzle oncoming car driver. To prevent dazzle, ECE regulation demand several technical solutions (ex. automatic change system, adhesive sheet, down aiming). This headlamps are designed not to dazzle opposite drivers. So, you need not change your headlamps in a country with opposite traffic direction.

Lighting control

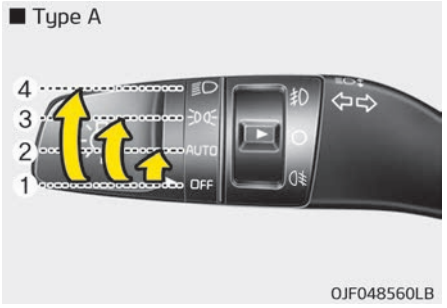

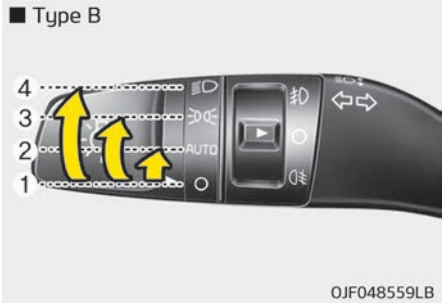

The light switch has a Headlight and a Parking light position.
To operate the lights, turn the knob at the end of the control lever to one of the following positions:

1. OFF position
2. Auto light position
3. Parking light position
4. Headlight position

Parking light position ( )

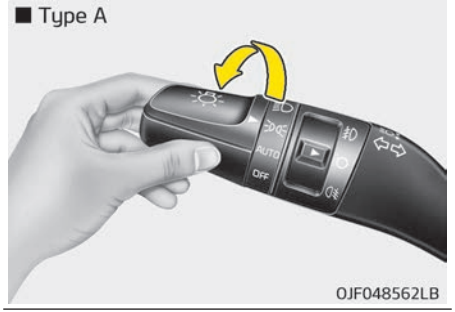

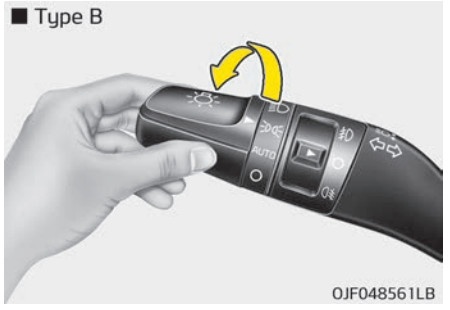

When the light switch is in the parking light position (3rd position), the tail, license and instrument panel lights will turn ON.

Headlight position ( )

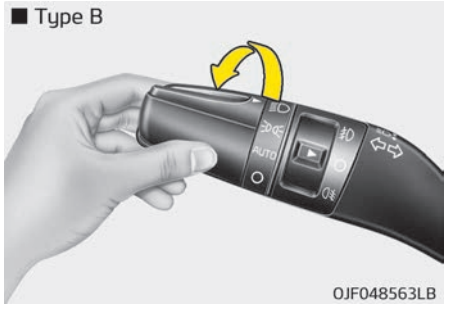

When the light switch is in the headlight position (4th position), the head, tail, license and instrument panel lights will turn ON.

✻ NOTICE

The ignition switch must be in the ON position to turn on the headlights.

Auto light

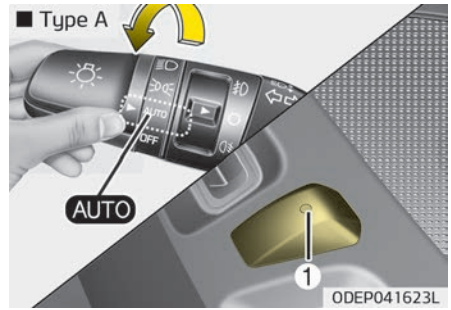

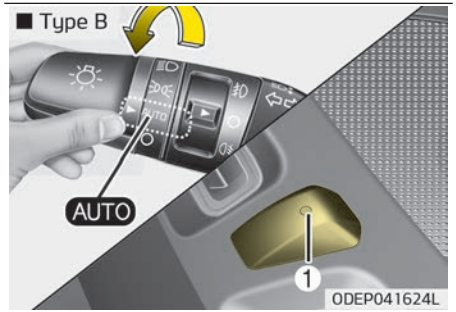

When the light switch is in the AUTO light position, the taillights and headlights will be turned ON or OFF automatically depending on the amount of light outside the vehicle.

⚠ CAUTION

- **Never place anything over the sensor (1) located on the instrument panel. This will ensure better auto-light system control.**
- **Don't clean the sensor using a window cleaner. The cleaner may leave a light film which could interfere with sensor operation.**
- **If your vehicle has window tint or other types of metallic coating on the front windshield, the Auto light system may not work properly.**

High beam operation

■ Type A

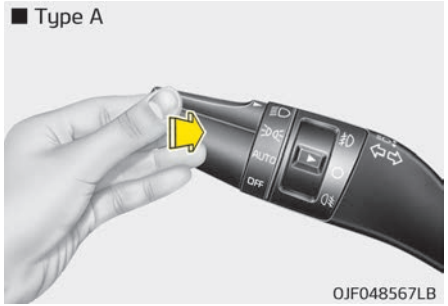

OJF048567LB

■ Type B

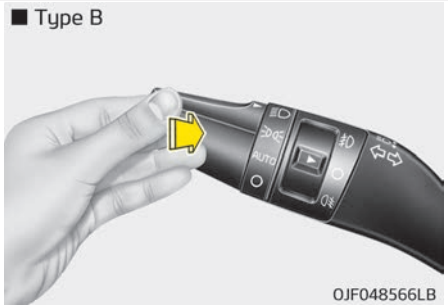

OJF048566LB

To turn on the high beam headlamp, push the lever away from you. The lever will return to its original position.
The high beam indicator will light when the headlight high beams are switched on.

To turn off the high beam headlamp, pull the lever to you when the high beam is on. The lever will return to its original position.
To prevent the battery from being discharged, do not leave the lights on for a prolonged time while the engine is not running.

⚠ WARNING

Do not use high beam when there are other vehicles. Using high beam could obstruct the other driver's vision.

■ Type A

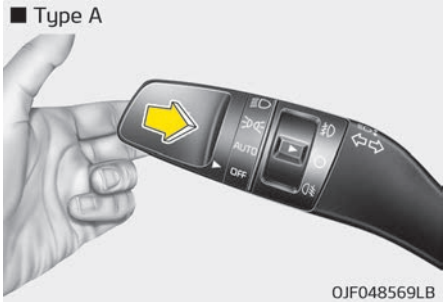

OJF048569LB

■ Type B

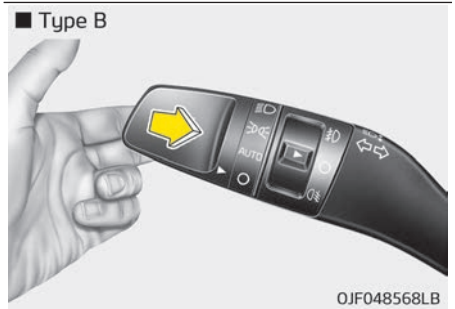

OJF048568LB

To flash the headlights, pull the lever towards you. It will return to the normal (low beam) position when released. The headlight switch does not need to be on to use this flashing feature.

High Beam Assist (HBA)(if equipped)

■ Type A

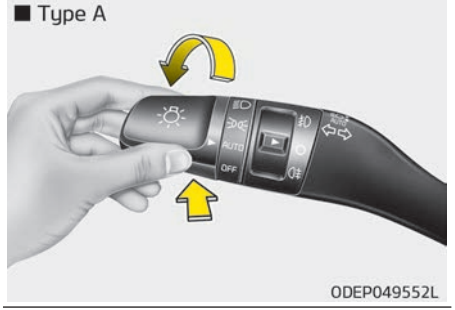

ODEP049552L

■ Type B

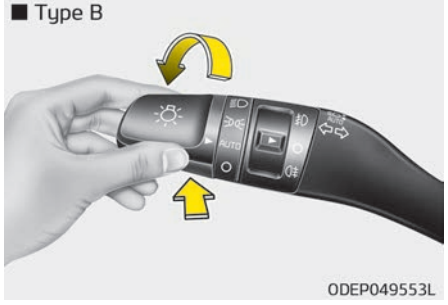

ODEP049553L

High Beam Assist is a function that automatically adjusts the headlamp range (switches between high beam and low beam) according to the brightness of other vehicles and road conditions.

Operation condition

1. Place the light switch in the AUTO position.
2. Turn on the high beam by pushing the lever away from you.
   The High Beam Assist (AUTO) indicator will illuminate.
3. High Beam Assist will turn on when vehicle speed is above 40 kph (25 mph).
   - If the lever is pushed away when the High Beam Assist is operating, High Beam Assist will turn off and the high beam will be on continuously. High Beam Assist (AUTO) indicator will turn off.
   - If the lever is pulled towards you when high beam is on with operating High Beam Assist, High Beam Assist will turn off.
4. If the light switch is placed to the headlamp position, High Beam Assist will turn off and the low beam will be on continuously.

The high beam switches to low beam in the below conditions.

- When High Beam Assist is off.
- When the light switch is not in the AUTO position.
- When the headlamp is detected from the on-coming vehicle.
- When the tail lamp is detected from the front vehicle.
- When the surrounding is bright enough high beams are not needed.
- When streetlights or other lights are detected.
- When vehicle speed is below 30 kph (19 mph).
- When headlamp / taillamp of bicycle/ motorcycle is detected.

⚠ CAUTION

The function may not operate normally in the below conditions.

(Continued)

(Continued)

- When the light from the on-coming or front vehicle is not detected because of lamp damage, hidden from sight, etc.
- When the lamp of the on-coming or front vehicle is covered with dust, snow or water.
- When the light from the on-coming or front vehicle is not detected because of exhaust fume, smoke, fog, snow, etc.
- When the front window is covered with foreign matters such as ice, dust, fog, or is damaged.
- When there is a similar shape lamp with the front vehicle's lamps.
- When it is hard to see because of fog, heavy rain or snow.
- When the headlamp is not repaired or replaced at an authorized dealer.
- When headlamp aiming is not properly adjusted.

(Continued)

(Continued)

- When driving on a narrow curved road or rough road.
- When driving downhill or uphill.
- When only part of the vehicle in front is visible on a cross-road or curved road.
- When there is a traffic light, reflecting sign, flashing sign or mirror.
- When the road conditions are bad such as being wet or covered with snow.
- When the front vehicle's headlamps are off but the fog lamps on.
- When a vehicle suddenly appears from a curve.
- When the vehicle is tilted from a flat tire or being towed.
- When LKA warning light illuminates. (if equipped)

⚠ WARNING

- Do not place any accessories, stickers or tint the windshield.
- Have the windshield glass replaced from an authorized dealer.
- Do not remove or impact related parts of High Beam Assist function.
- Be careful that water doesn't get into the High Beam Assist unit.
- Do not place objects on the dashboard that reflects light such as mirrors, white paper, etc. The function may malfunction if sunlight is reflected.
- At times, Smart High Beam may not work properly, always check the road conditions for your safety. When the function does not operate normally, manually change between the high beam and low beam.

Turn signals and lane change signals

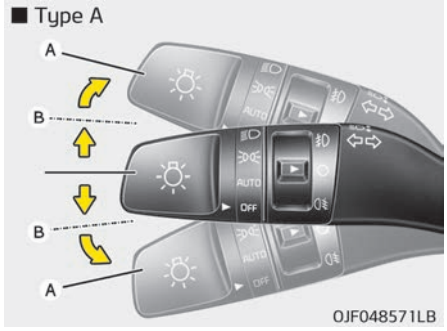

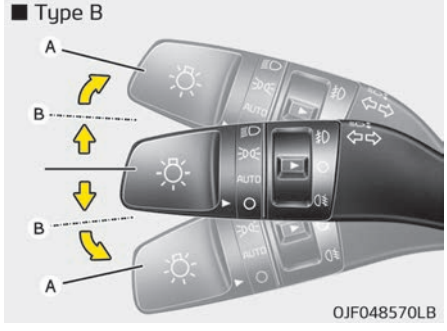

The ignition switch must be on for the turn signals to function. To turn on the turn signals, move the lever up or down (A). The green arrow indicators on the instrument panel indicate which turn signal is operating.
They will self-cancel after a turn is completed. If the indicator continues to flash after a turn, manually return the lever to the OFF position.
To signal a lane change, move the turn signal lever slightly and hold it in position (B). The lever will return to the OFF position when released.
If an indicator stays on and does not flash or if it flashes abnormally, one of the turn signal bulbs may be burned out and will require replacement.

One-touch lane change function (if equipped)

To activate an one-touch lane change function, move the turn signal lever slightly for less than 0.7 second and then release it. The lane change signals will blink 3 times.

✻ NOTICE

If an indicator flash is abnormally quick or slow, a bulb may be burned out or have a poor electrical connection in the circuit.

Front fog light (if equipped)

Fog lights are used to provide improved visibility when visibility is poor due to fog, rain or snow, etc. The fog lights will turn on when the fog light switch (1) is turned on after the parklight is turned on.

To turn off the fog lights, turn the fog light switch (1) to the ON position again.

⚠ CAUTION

When in operation, the fog lights consume large amounts of vehicle electrical power. Only use the fog lights when visibility is poor.

Rear fog light (if equipped)

To turn the rear fog lights on, turn the headlight switch to the headlight on position and turn the rear fog light switch (1) to the on position.

The rear fog lights turn on when the rear fog light switch is turned on after the front fog light switch is turned on and the headlight switch is in the park light position.
To turn the rear fog lights off, turn the rear fog light switch to the on position again or turn the headlight switch off.

✻ NOTICE

To turn on the rear fog light switch, the ignition switch must be in the ON position.

Headlight leveling device (if equipped)

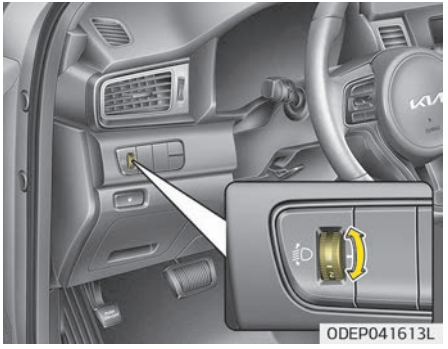

To adjust the headlight beam level according to the number of passengers and loading weight in the luggage area, turn the beam leveling switch.
The higher the number of the switch position, the lower the headlight beam level. Always keep the headlight beam at the proper leveling position, or headlights may dazzle other road users.
Listed below are the examples of proper switch settings. For loading conditions other than those listed below, adjust the switch position so that the beam level may be the nearest as the condition obtained according to the list.

Loading condition	Switch position
Driver only	0
Driver + Front passenger	0
Driver + Full passengers	1
Full passengers (including driver) + Maximum permissible loading	2
Driver + Maximum permissible loading	3

WIPERS AND WASHERS

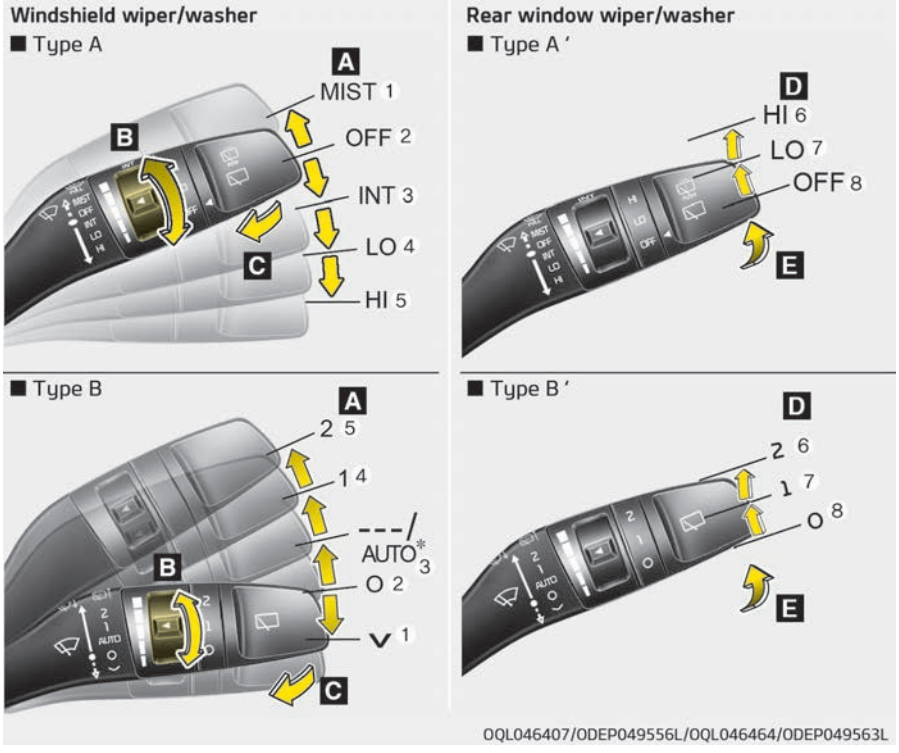

A: Wiper speed control (front)

1. MIST/⋁ – Single wipe
2. OFF/O – Off
3. INT/--- – Intermittent wipe
   AUTO* – Auto control wipe
4. LO/1 – Low wiper speed
5. HI/2 – High wiper speed

B: Intermittent control wipe time adjustment

C: Wash with brief wipes (front) *

D: Rear wiper/washer control *

6. HI/2– Continuous wipe
7. LO/1 – Intermittent wipe*
8. OFF/O – Off

E: Wash with brief wipes (rear) *

Windshield wipers

Operates as follows when the ignition switch is turned ON.

1. MIST/⋁: For a single wiping cycle, move the lever to this (MIST/⋁) position and release it. The wipers will operate continuously if the lever is held in this position.

*: if equipped

2. OFF/O: Wiper is not in operation
3. INT/---: Wiper operates intermittently at the same wiping intervals. Use this mode in light rain or mist. To vary the speed setting, turn the speed control knob.
4. LO/1 : Normal wiper speed
5. HI/2: Fast wiper speed

✻ NOTICE

If there is heavy accumulation of snow or ice on the windshield, defrost the windshield for about 10 minutes, or until the snow and/or ice is removed before using the windshield wipers to ensure proper operation. If you do not remove the snow and/or ice before using the wiper and washer, it may damage the Wiper and washer system.

Auto control (if equipped)

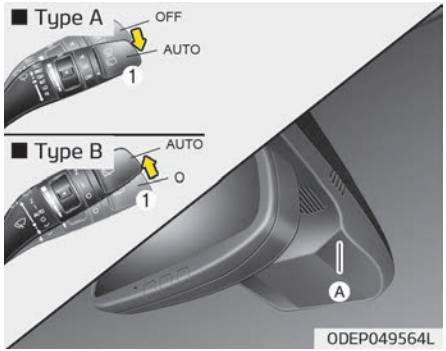

The rain sensor (A) located on the upper end of the windshield glass senses the amount of rainfall and controls the wiping cycle for the proper interval. The more it rains, the faster the wiper operates. When the rain stops, the wiper stops.
To vary the speed setting, turn the speed control knob (1).
If the wiper switch is set in AUTO mode when the ignition switch is ON, the wiper will operate once to perform a self-check of the system. Set the wiper to OFF (O) position when the wiper is not in use.

⚠ CAUTION

When the ignition switch is ON and the windshield wiper switch is placed in the AUTO mode, use caution in the following situations to avoid any injury to the hands or other parts of the body:

- **Do not touch the upper end of the windshield glass facing the rain sensor.**
- **Do not wipe the upper end of the windshield glass with a damp or wet cloth.**
- **Do not put pressure on the windshield glass.**

⚠ CAUTION

- **When washing the vehicle, set the wiper switch in the OFF (O) position to stop the auto wiper operation.**
  The wiper may operate and be damaged if the switch is set in the AUTO mode while washing the vehicle.

(Continued)

(Continued)

- **Do not remove the sensor cover located on the upper end of the passenger side windshield glass. Damage to system parts could occur and may not be covered by your vehicle warranty.**
- **When starting the vehicle in winter, set the wiper switch in the OFF (O) position. Otherwise, wipers may operate and ice may damage the windshield wiper blades. Always remove all snow and ice and defrost the windshield properly prior to operating the windshield wipers.**
- **When tinting the windshield, be careful of any fluid getting into the sensor located in the top center of the front windshield. It may damage the related parts.**

Windshield washers

■ Type A

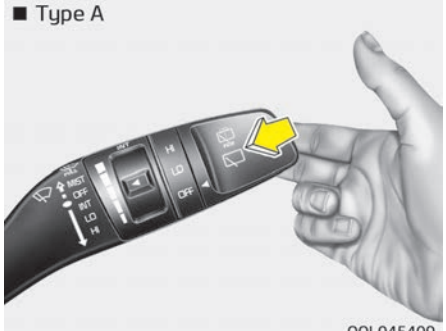

OQL045409

■ Type B

ODEP049565L

In the OFF (O) position, pull the lever gently toward you to spray washer fluid on the windshield and to run the wipers 1-3 cycles.
Use this function when the windshield is dirty.
The spray and wiper operation will continue until you release the lever.
If the washer does not work, check the washer fluid level. If the fluid level is not sufficient, you will need to add appropriate non-abrasive windshield washer fluid to the washer reservoir.
The reservoir filler neck is located in the front of the engine compartment on the passenger side.

⚠ CAUTION

To prevent possible damage to the washer pump, do not operate the washer when the fluid reservoir is empty.

⚠ WARNING

Do not use the washer in freezing temperatures without first warming the windshield with the defrosters;

(Continued)

(Continued)

the washer solution could freeze on the windshield and obscure your vision.

⚠ CAUTION

- **To prevent possible damage to the wipers or windshield, do not operate the wipers when the windshield is dry.**
- **To prevent damage to the wiper blades, do not use gasoline, kerosene, paint thinner, or other solvents on or near them.**
- **To prevent damage to the wiper arms and other components, do not attempt to move the wipers manually.**
- **To prevent possible damage to the wipers and washer system, use anti-freezing washer fluids in the winter season or cold weather.**

Rear window wiper and washer switch

■ Type A

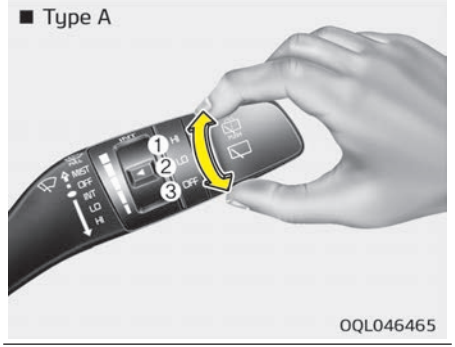

OQL046465

■ Type B

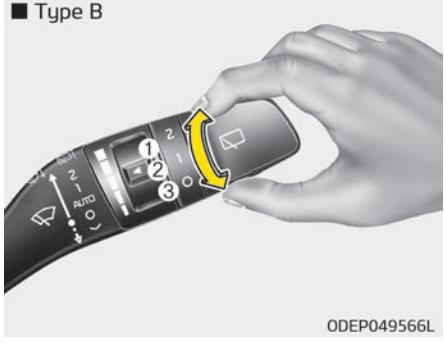

ODEP049566L

The rear window wiper and washer switch is located at the end of the wiper and washer switch lever. Turn the switch to the desired position to operate the rear wiper and washer.

HI/2 -	Normal wiper operation
LO/1 -	Intermittent wiper operation (if equipped)
OFF/O -	Wiper is not in operation

■ Type A

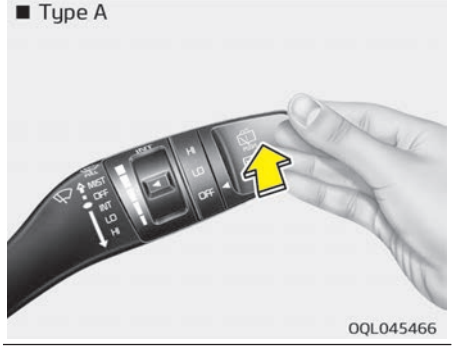

OQL045466

■ Type B

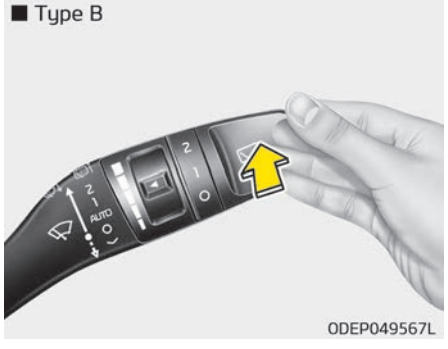

ODEP049567L

Push the lever away from you to spray rear washer fluid and to run the rear wipers 1~3 cycles. The spray and wiper operation will continue until you release the lever.

INTERIOR LIGHT

⚠ CAUTION

Do not use the interior lights for extended periods when the engine is not running. It may cause battery discharge.

⚠ WARNING

Do not use the interior lights when driving in the dark. Accidents could happen because the view may be obscured by interior lights.

Automatic turn off function (if equipped)

The interior lights automatically turn off approximately 20 minutes after the ignition switch is turned off.
If your vehicle is equipped with the theft alarm system, the interior lights automatically turns off approximately 5 seconds after the system is armed stage.

Map lamp

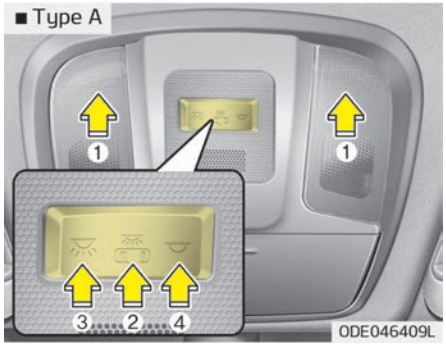

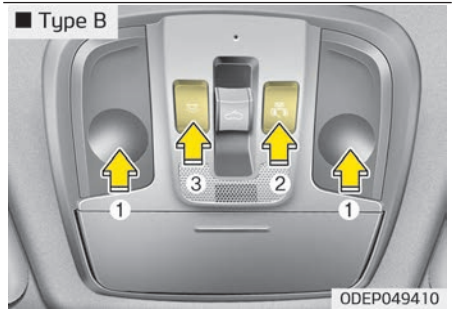

(2):

- The map lamp and room lamp comes on when a door is opened. The lamps go out after approximately 30 seconds.
- The map lamp and room lamp comes on for approximately 30 seconds when doors are unlocked with a transmitter or smart key as long as the doors are not opened.
- The map lamp and room lamp will stay on for approximately 20 minutes if a door is opened with the ignition switch in the ACC or LOCK/OFF position.
- The map lamp and room lamp will stay on continuously if the door is opened with the ignition switch in the ON position.
- The map lamp and room lamp will go out immediately if the ignition switch is changed to the ON position or all doors are locked.
- To turn off the DOOR mode, press the DOOR button (2) once again (not pressed).

✻ NOTICE

The DOOR mode and ROOM mode can not be selected at a time.

Front Room Lamp:

- Type A
  - (3): Press this switch to turn the front and rear room lamps on.
  - (4): Press this switch to turn the front and rear room lamps off.
- Type B
  - (3): Press this switch to turn the front and rear room lamps on and off.

Room lamp

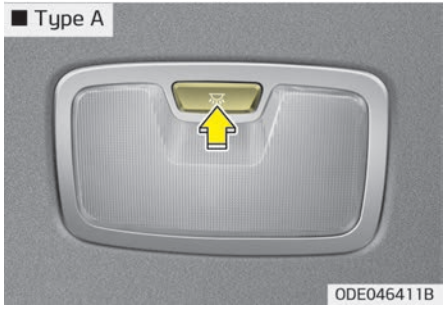

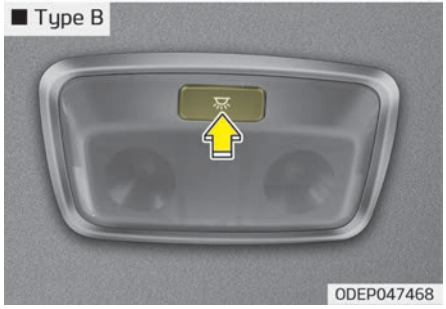

- : The light stays on at all times.

Tailgate room lamp

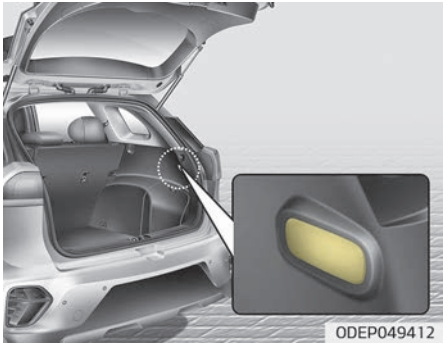

The tailgate room lamp comes on when the tailgate is opened.

✻ NOTICE

The tailgate lamp comes on as long as the tailgate lid is open. To prevent unnecessary charging system drain, close the tailgate lid securely after using the tailgate.

Vanity mirror lamp

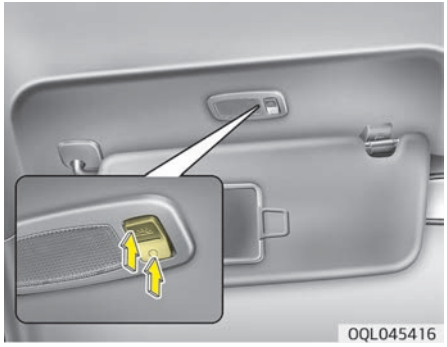

Push the switch to turn the light on or off.

- : The lamp will turn on if this button is pressed.
- : The lamp will turn off if this button is pressed.

⚠ CAUTION

■ Vanity mirror lamp

(Continued)

(Continued)

Always have the switch in the off position when the vanity mirror lamp is not in use. If the sun visor is closed without the lamp off, it may discharge the battery or damage the sun visor.

WELCOME SYSTEM (IF EQUIPPED)

Welcome light (if equipped)

When all the doors (and tailgate) are locked and closed, the door handle lamp will come on for about 15 seconds if any of the below is performed.

- With the smart key system
  - When the vehicle is approached with the smart key in possession.

Escort welcome (if equipped)

When the headlight (light switch in the headlight or AUTO position) is on and all doors (and tailgate) are locked and closed, the position light and headlight will come on for 15 seconds if any of the below is performed.

- Without smart key system
  - When the door unlock button is pressed on the transmitter.
- With the smart key system
  - When the door unlock button is pressed on the smart key.

At this time, if you press the door lock or unlock button, the position light and headlight will turn off immediately.

Interior light

When the interior light switch is in the DOOR position and all doors (and tailgate) are locked and closed, the room lamp will come on for 30 seconds if any of the below is performed.

- Without smart key system
  - When the door unlock button is pressed on the transmitter.
- With the smart key system
  - When the door unlock button is pressed on the smart key.
  - When the button of the outside door handle is pressed.

At this time, if you press the door lock or unlock button, the room lamp will turn off immediately.

DEFROSTER

⚠ CAUTION

To prevent damage to the conductors bonded to the inside surface of the rear window, never use sharp instruments or window cleaners containing abrasives to clean the window.

✻ NOTICE

If you want to defrost and defog the front windshield, refer to "Windshield defrosting and defogging" on page 5-141.

Rear window defroster

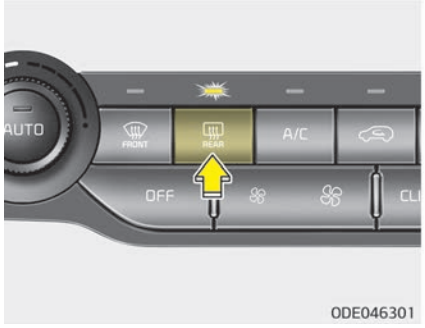

The defroster heats the window to remove frost, fog and thin ice from the rear window, while the engine is running.
To activate the rear window defroster, press the rear window defroster button located in the center facia switch panel. The indicator on the rear window defroster button illuminates when the defroster is ON.
If there is heavy accumulation of snow on the rear window, brush it off before operating the rear defroster.

The rear window defroster automatically turns off after approximately 20 minutes or when the ignition switch is turned off. To turn off the defroster, press the rear window defroster button again.

Outside rearview mirror defroster (if equipped)

If your vehicle is equipped with the outside rearview mirror defrosters, they will operate at the same time you turn on the rear window defroster.

CLIMATE CONTROL SYSTEM

System operation

Ventilation

1. Set the mode to the position.
2. Set the air intake control to the outside (fresh) air position.
3. Set the temperature control to the desired position.
4. Set the fan speed control to the desired speed.

Heating

1. Set the mode to the position.
2. Set the air intake control to the outside (fresh) air position.
3. Set the temperature control to the desired position.
4. Set the fan speed control to the desired speed.
5. If dehumidified heating is desired, turn the air conditioning system (if equipped) on.

Operation tips

- To keep dust or unpleasant fumes from entering the vehicle through the ventilation system, temporarily set the air intake control to the recirculated air position. Be sure to return the control to the fresh air position when the irritation has passed to keep fresh air in the vehicle. This will help keep the driver alert and comfortable.
- Air for the heating/cooling system is drawn in through the grilles just ahead of the windshield. Care should be taken that these are not blocked by leaves, snow, ice or other obstructions.
- To prevent interior fog on the windshield, set the air intake control to the fresh air position and fan speed to the desired position, turn on the air conditioning system, and adjust the temperature control to desired temperature.
- If the windshield fogs up, set the mode to the position.

⚠ CAUTION

Operating the blower when the ignition switch is in the ON position could cause the battery to discharge. Operate the blower when the engine is running.

Air conditioning

Kia air conditioning systems are filled with R-134a or R-1234yf refrigerant.

1. Start the engine. Push the air conditioning button.
2. Set the mode to the position.
3. Set the air intake control to the outside air or recirculated air position.
4. Adjust the fan speed control and temperature control to maintain maximum comfort.

Your vehicle is filled with R-134a or R-1234yf according to the regulation in your country at the time of production. You can find out which air conditioning refrigerant is applied to your vehicle on the label located inside of the hood. Refer to "Refrigerant label" on page 9-21 for the location of the air conditioning refrigerant label.

⚠ CAUTION

- **The refrigerant system should only be serviced by trained and certified technicians to insure proper and safe operation.**
- **The refrigerant system should be serviced in a well-ventilated place.**
- **The air conditioning evaporator (cooling coil) shall never be repaired or replaced with one removed from a used or salvaged vehicle and new replacement MAC evaporators shall be certified (and labeled) as meeting SAE Standard J2842.**

✻ NOTICE

- When using the air conditioning system, monitor the temperature gauge closely while driving up hills or in heavy traffic when outside temperatures are high. Air conditioning system operation may cause engine overheating. Continue to use the blower fan but turn the air conditioning system off if the temperature gauge indicates engine overheating.
- When opening the windows in humid weather air conditioning may create water droplets inside the vehicle. Since excessive water droplets may cause damage to electrical equipment, air conditioning should only be used with the windows closed.

Air conditioning system operation tips

- If the vehicle has been parked in direct sunlight during hot weather, open the windows for a short time to let the hot air inside the vehicle escape.
- Use air conditioning to reduce humidity and moisture inside the vehicle on rainy or humid days.
- During air conditioning system operation, you may occasionally notice a slight change in engine speed as the air conditioning compressor cycles. This is a normal system operation characteristic.
- Use the air conditioning system every month only for a few minutes to ensure maximum system performance.
- When using the air conditioning system, you may notice clear water dripping (or even puddling) on the ground under the passenger side of the vehicle. This is a normal system operation characteristic.

- Operating the air conditioning system in the recirculated air position provides maximum cooling, however, continual operation in this mode may cause the air inside the vehicle to become stale.
- During cooling operation, you may occasionally notice a misty air flow because of rapid cooling and humid air intake. This is a normal system operation characteristic.

Climate control air filter

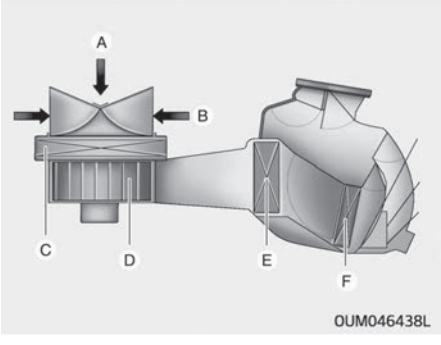

A: Outside air

B: Recirculated air

C: Climate control air filter

D: Blower

E: Evaporator core

F: Heater core

The climate control air filter installed behind the glove box filters the dust or other pollutants that come into the vehicle from the outside through the heating and air conditioning system.
If dust or other pollutants accumulate in the filter over a period of time, the air flow from the air vents may decrease, resulting in moisture accumulation on the inside of the windshield even when the outside (fresh) air position is selected. If this happens, have the climate control air filter replaced by a professional workshop. Kia recommends to visit an authorized Kia dealer/service partner.

✻ NOTICE

- Replace the filter according to the “Maintenance schedule” on page 8-12.
  If the car is being driven in severe conditions such as dusty, rough roads, more frequent climate control air filter inspections and changes are required.
- When the air flow rate suddenly decreases, have the system checked by a professional workshop. Kia recommends to visit an authorized Kia dealer/service partner.

Air conditioning refrigerant label

■ Example

Type A

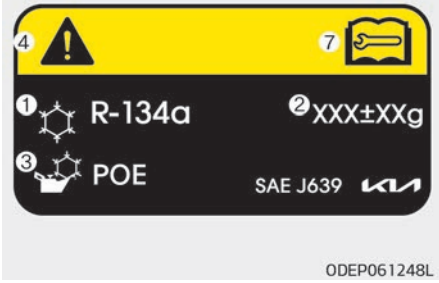

Type B

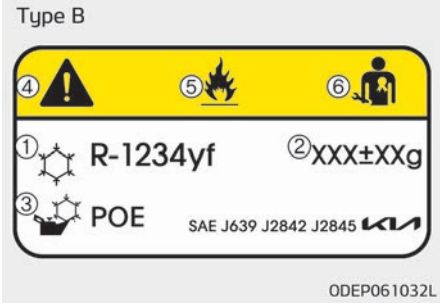

❊ The actual Air Conditioning refrigerant label in the vehicle may differ from the illustration.

Each symbols and specification on air conditioning refrigerant label means as below ;

1. Classification of refrigerant
2. Amount of refrigerant
3. Classification of Compressor lubricant
4. Caution
5. Flammable Refrigerant
6. Registered Technician to Service Air Conditioning system
7. Service manual

You can find out which air conditioning refrigerant is applied your vehicle at the label inside of the engine room.

Refer to "Refrigerant label" on page 9-21 for more detail location of air conditioning refrigerant label.

⚠ CAUTION

■ **AC Repair**

It is important that the correct type and amount of oil and refrigerant is used, otherwise damage to the vehicle may occur. To prevent damage, the air conditioning system in your vehicle should only be serviced by trained and certified technicians.

Checking the amount of air conditioner refrigerant and compressor lubricant

When the amount of refrigerant is low, the performance of the air conditioning is reduced. Overfilling also has a bad influence on the air conditioning system. Therefore, if abnormal operation is found, have the system inspected by a professional workshop. Kia recommends to visit an authorized Kia dealer/service partner.

⚠ WARNING

■ **Vehicles equipped with R-134a***

Because the refrigerant is at very high pressure, the air conditioning system should only be serviced by trained and certified technicians. It is important that the correct type and amount of oil and refrigerant is used. Otherwise, it may cause damage to the vehicle and personal injury.

⚠ WARNING

■ **Vehicles equipped with R-1234yf***

(Continued)

(Continued)

Since the refrigerant is mildly flammable and operated at high pressure, the air conditioning system should only be serviced by trained and certified technicians.

It is important that the correct type and amount of oil and refrigerant is used.All refrigerants should be reclaimed with proper equipment. Venting refrigerants directly to the atmosphere is harmful to individuals and environment.Failure to heed these warnings can lead to serious injuries.

*: Your vehicle is filled with R-134a or R-1234yf according to the regulation in your country at the time of producing. You can find out which air conditioning refrigerant is applied your vehicle at the label inside of engine room. Refer to chapter 8 for more detail location of air conditioning refrigerant label.

Automatic climate control system

System overview

1. Driver's temperature control knob
2. AUTO (automatic control) button
3. Front windshield defroster button
4. Rear window defroster button
5. Air conditioning button
6. Air intake control button
7. OFF button
8. Fan speed control button
9. Mode selection button
10. Passenger's temperature control knob
11. SYNC temperature control selection button
12. Climate button
13. Driver only select button

Automatic heating and air conditioning

1. Press the AUTO button. The modes, fan speeds, air intake and air-conditioning will be controlled automatically according to the temperature setting.

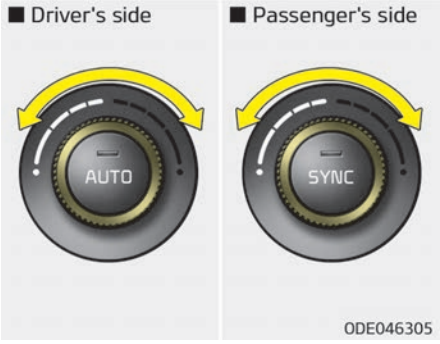

2. Turn the temperature control knob to the desired temperature.

✻ NOTICE

- To turn the automatic operation off, select any button or switch of the following:
  - Mode selection button
  - Air conditioning button

(Continued)

(Continued)

  - Front windshield defroster button
    (Press the button one more time to deselect the front windshield defroster function. The 'AUTO' sign will illuminate on the information display once again.)
  - Fan speed control button

  The selected function will be controlled manually while other functions operate automatically.

- For your convenience and to improve the effectiveness of the climate control, use the AUTO button and set the temperature to 22 °C/71 °F (23 °C/73 °F Except Europe).

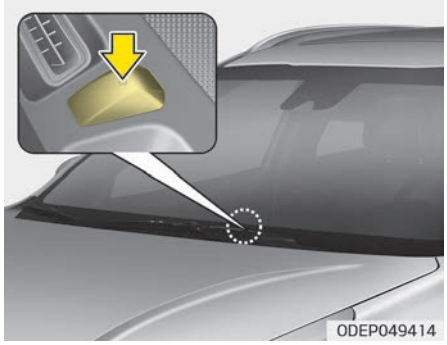

✻ NOTICE

Never place anything over the sensor located on the instrument panel to ensure better control of the heating and cooling system.

Mode selection

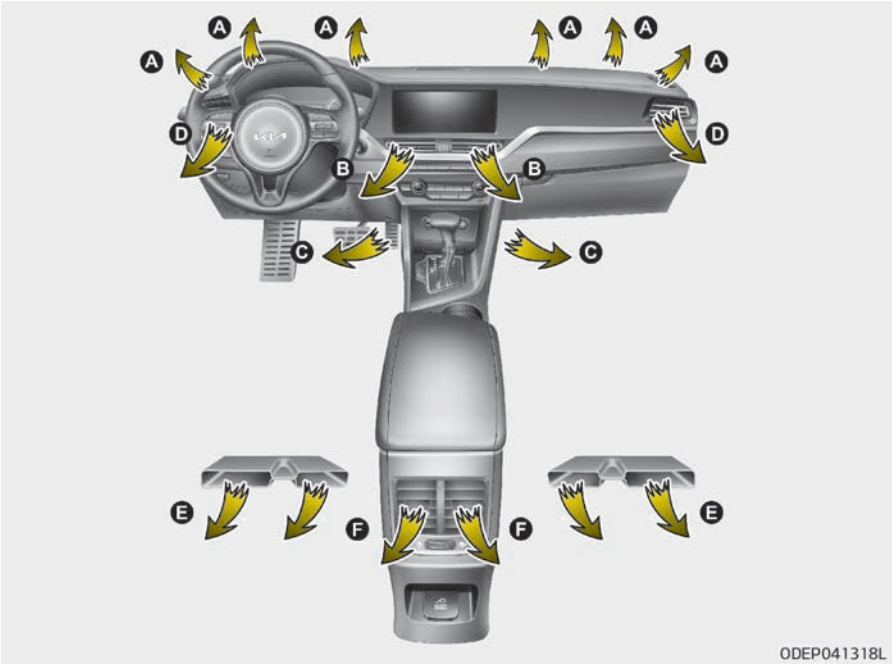

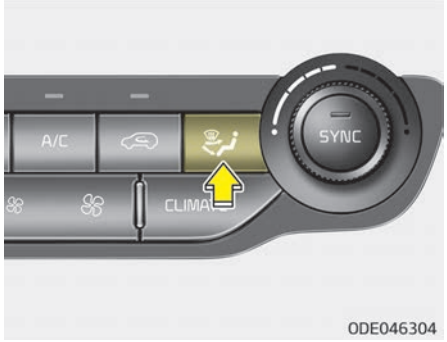

The mode selection button controls the direction of the air flow through the ventilation system.
The air flow outlet port is converted as follows:
For Europe

Except Europe

Face-Level (B, D, F)

Air flow is directed toward the upper body and face. Additionally, each outlet can be controlled to direct the air discharged from the outlet.

Bi-Level (B, C, D, E, F)

Air flow is directed towards the face and the floor.

Floor-Level (A, C, D, E, F)

Most of the air flow is directed to the floor, with a small amount of the air being directed to the windshield and side window defrosters.

Floor/Defrost-Level (A, C, D, E, F)

Most of the air flow is directed to the floor and the windshield with a small amount directed to the side window defrosters.

ALL-Level (A,B,C,D,E,F)

Air flow is directed towards the face and floor and windshield and side window defrosters.

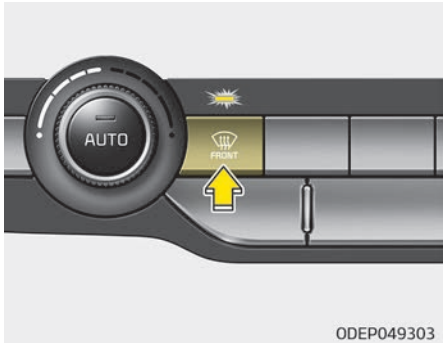

Defrost-Level

Most of the air flow is directed to the windshield with a small amount of air directed to the side window defrosters.

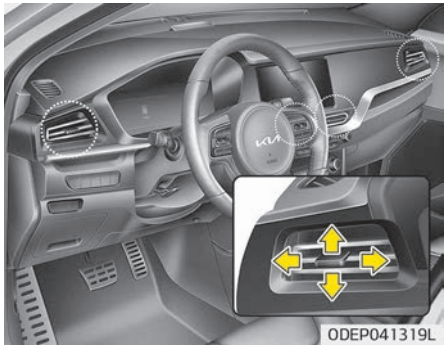

Instrument panel vents

The outlet vents can be opened or closed separately using the thumbwheel.
Also, you can adjust the direction of air delivery from these vents using the vent control lever as shown.

✻ NOTICE

■ 2nd row outlet vents (E, F)
(Continued)

(Continued)

- The air flow of the 2nd row outlet vents is controlled by the front climate control system and delivered through the inside air duct of the floor (E, F).
- The air flow of the 2nd row outlet vents (E, F) may be weaker than the instrument panel vents for the long air duct.

Temperature control

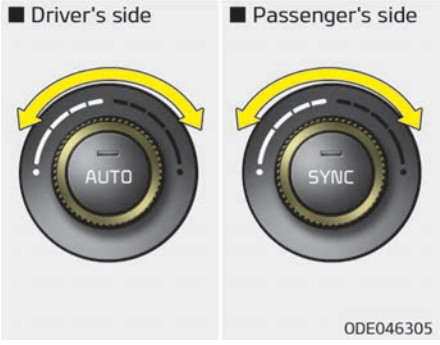

The temperature will increase to the maximum by turning the knob to the extreme right.
The temperature will decrease to the minimum by turning the knob to the extreme left.
When turning the knob, the temperature will increase or decrease by 0.5 °C/ 1 °F. When set to the lowest temperature setting, the air conditioning will operate continuously.

Adjusting the driver and passenger side temperature equally

- Press the "SYNC" button to adjust the driver and passenger side temperature equally.
  The passenger side temperature will be set to the same temperature as the driver side temperature.
- Turn the driver side temperature control knob. The driver and passenger side temperature will be adjusted equally.

Adjusting the driver and passenger side temperature individually

- Press the "SYNC" button again to adjust the driver and passenger side temperature individually. The illumination of button turns off.
- Operate the driver side temperature control knob to adjust the driver side temperature.
- Operate the passenger side temperature control knob to adjust the passenger side temperature.

Temperature conversion (°C ↔ °F) (if equipped)

You can switch the temperature mode between Centigrade to Fahrenheit as follows;
While pressing the OFF button, press the AUTO button for 3 seconds or more. The display will change from Centigrade to Fahrenheit, or from Fahrenheit to Centigrade.

Air intake control

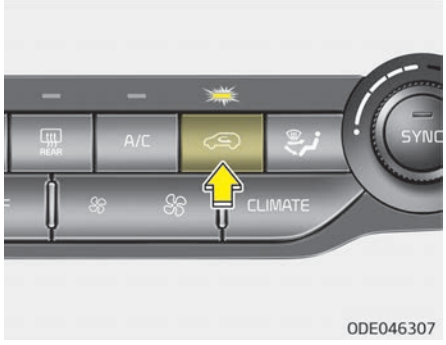

This is used to select the outside (fresh) air position or recirculated air position.
To change the air intake control position, push the control button.

Recirculated air position

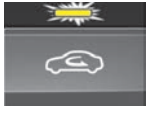

With the recirculated air position selected, air from the passenger compartment will be drawn through the heating system and heated or cooled according to the function selected.

Outside (fresh) air position

With the outside (fresh) air position selected, air enters the vehicle from outside and is heated or cooled according to the function selected.

✻ NOTICE

Prolonged operation of the heater in the recirculated air position (without air conditioning selected) may cause fogging of the windshield and side windows and the air within the passenger compartment may become stale.
In addition, prolonged use of the air conditioning with the recirculated air position selected will result in excessively dry air in the passenger compartment.

⚠ WARNING

- **Continue using the climate control system in the recirculated air position may allow humidity to increase inside the vehicle which may fog the glass and obscure visibility.**
- **Do not sleep in a vehicle with the air conditioning or heating system on. It may cause serious harm or death due to a drop in the oxygen level and/or body temperature.**
- **Continue using the climate control system in the recirculated air position can cause drowsiness or sleepiness, and loss of vehicle control. Set the air intake control to the outside (fresh) air position as much as possible while driving.**

Fan speed control

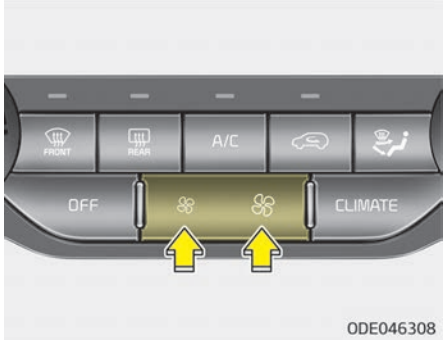

The fan speed can be set to the desired speed by pushing the fan speed control button.
The higher the fan speed is, the more air is delivered.
Pressing the OFF button turns off the fan.

Air conditioning

Press the A/C button to turn the air conditioning system on (indicator light will illuminate).
Press the button again to turn the air conditioning system off.

OFF mode

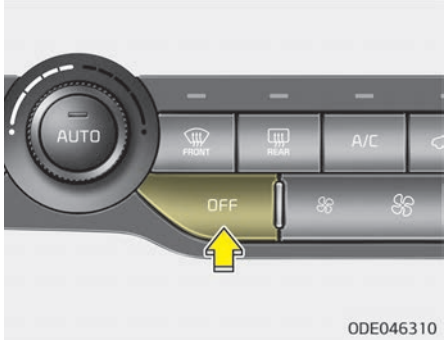

Press the front blower OFF button to turn off the front air climate control system. However, you can still operate the mode and air intake buttons as long as the ignition switch is in the ON position.

Climate information screen selection (if equipped)

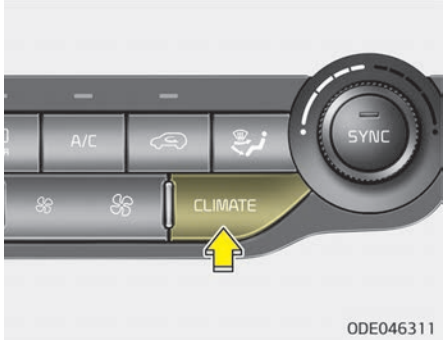

Press the climate information screen selection button to display climate information on the screen.

Driver only

If you press the DRIVER ONLY button and the indicator light illuminates, cold air mostly blows in the direction of the driver's seat. However, some of the cold air may come out of other seats' ducts to keep indoor air pleasant.
If you use the button with no passenger in the front passenger seat, energy consumption will be reduced.

Automatic ventilation

The system automatically selects the outside (fresh) air position when the climate control system operates over a certain period of time (approximately 5 minutes) in low temperature with the re-circulated air position selected.

To cancel or reset the Automatic Ventilation

When the air conditioning system is on, select Face Level mode and while pressing the A/C button, press the re-circulated air position button five times within three seconds.
When the automatic ventilation is canceled, the indicator blinks 3 times. When the automatic ventilation is activated, the indicator blinks 6 times.

Sunroof inside air recirculation

The outside (fresh) air position is automatically selected, when the sunroof is opened.
When you select the recirculated air position, the system maintains the recirculated air position for 3 minutes and then automatically converts to the outside (fresh) air position.
When the sunroof is closed, the air intake position will return to the original position that was selected.

WINDSHIELD DEFROSTING AND DEFOGGING

Automatic climate control system

To defog inside windshield

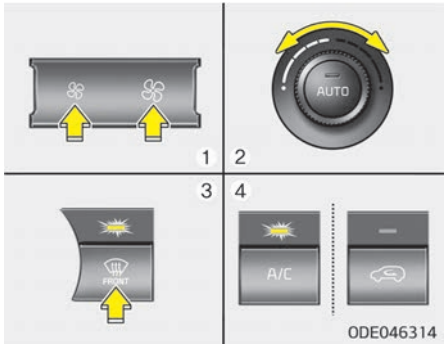

1. Set the fan speed to the desired position.
2. Select desired temperature.
3. Press the defroster button .
4. The air conditioning will turn on according to the detected ambient temperature and outside (fresh) air position will be selected automatically.
   If the air conditioning and outside (fresh) air position are not selected automatically, adjust the corresponding button manually. If the position is selected, lower fan speed is adjusted to a higher fan speed.

To defrost outside windshield

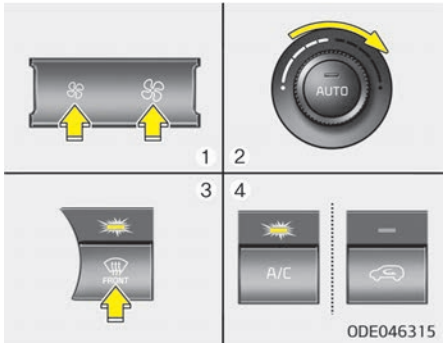

1. Set the fan speed to the highest position.
2. Set the temperature to the extreme hot position.
3. Press the defroster button .
4. The air conditioning will turn on according to the detected ambient temperature and outside (fresh) air position will be selected automatically.

Operation tips

- For maximum defrosting, set the temperature control to the extreme right/hot position and the fan speed control to the highest speed.
- If warm air to the floor is desired while defrosting or defogging, set the mode to the floor-defrost position.
- Before driving, clear all snow and ice from the windshield, rear window, outside rear view mirrors, and all side windows.
- Clear all snow and ice from the hood and air inlet in the cowl grill to improve heater and defroster efficiency and to reduce the probability of fogging up the inside of the windshield.

⚠ WARNING

■ Windshield heating

Do not use the position during cooling operation in extremely humid weather. The difference between the temperature of the outside air and the windshield could cause the outer surface of the windshield to fog up, causing loss of visibility. In this case, set the mode selection to the position and fan speed control to the lower speed.

Defogging logic (if equipped)

To reduce the probability of fogging up the inside of the windshield, the air intake or air conditioning are controlled automatically according to certain conditions such as position. To cancel or return the defogging logic, do the following.

Automatic climate control system

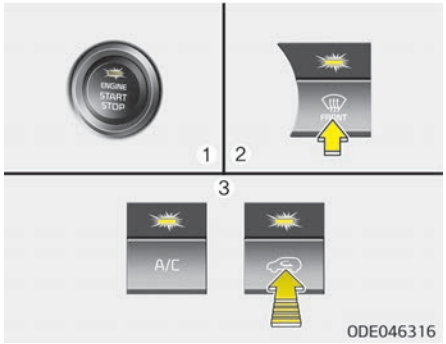

1. Turn the ignition switch to the ON position.
2. Press the defroster button ( ).
3. While pressing the air conditioning button (A/C), press the air intake control button at least 5 times within 3 seconds.

The indicator on the air intake button will blink 3 times. It indicates that the defogging logic is canceled or returned to the programmed status.
If the battery has been discharged or disconnected, it resets to the defog logic status.

Auto defogging system

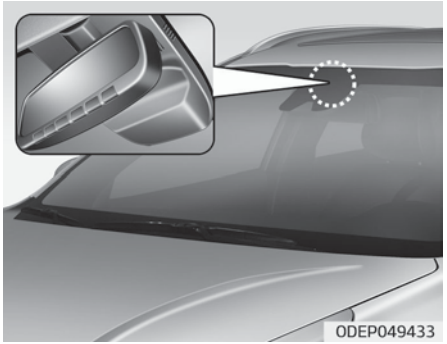

Auto defogging reduces the possibility of fogging up the inside of the windshield by automatically sensing the moisture of inside the windshield.
This indicator illuminates when the auto defogging system senses the moisture of inside the windshield and operates.
If more moisture is in the vehicle, higher steps operate as follow.

(For European region)
Step 1 : Blowing air flow toward the windshield
Step 2 : Increasing air flow toward the windshield

Step 3 : Operating the air conditioning.
Step 4 : Outside air position

(For except european region)
Step 1 : Outside air position
Step 2 : Operating the air conditioning
Step 3 : Blowing air flow toward the windshield
Step 4 : Increasing air flow toward the windshield

To cancel or reset the Auto Defogging System

Press the front windshield defroster button for 3 seconds when the ignition switch is in the ON position.
When the ADS system is canceled, Indicator on the button will blink 3 times per 0.5 sec or "ADS OFF" will blink 3 times per 0.5 sec and "ADS OFF" will be displayed on the LCD of audio.
When the ADS system is reset, Indicator on the button will blink 6 times per 0.25 sec or "ADS OFF" will blink 6 times per 0.25 sec and "ADS OFF" will be disappeared on the LCD of audio.

STORAGE COMPARTMENT

These compartments can be used to store small items.

⚠ CAUTION

- **To avoid possible theft, do not leave valuables in the storage compartment.**
- **Always keep the storage compartment covers closed while driving. Do not attempt to place so many items in the storage compartment that the storage compartment cover cannot close securely.**

⚠ WARNING

■ Flammable materials

Do not store cigarette lighters, propane cylinders, or other flammable/explosive materials in the vehicle. These items may catch fire and/or explode if the vehicle is exposed to hot temperatures for extended periods.

Center console storage

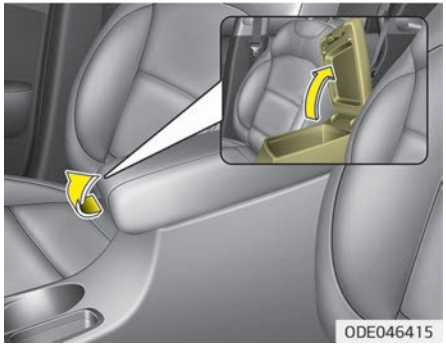

To open the center console storage, pull up the lever.

Glove box

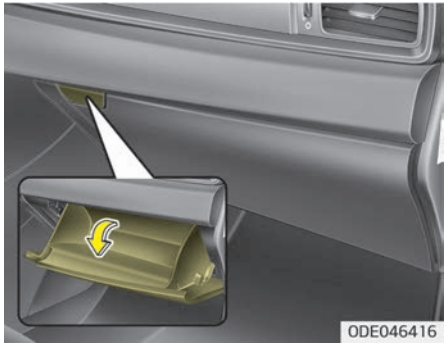

To open the glove box, push the lever and the glove box will automatically open. Close the glove box after use.

⚠ WARNING

To reduce the risk of injury in an accident or sudden stop, always keep the glove box door closed while driving.

⚠ CAUTION

Do not keep food in the glove box for a long time.

Sunglass holder

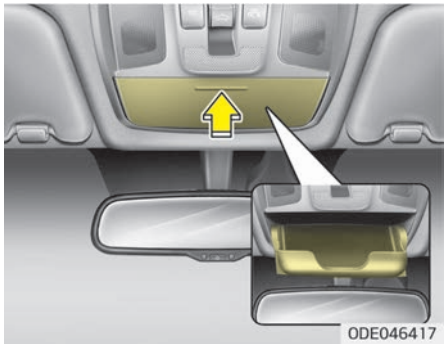

To open the sunglass holder, press the cover and the holder will slowly open. Place your sunglasses with the lenses facing out. To close the sunglass holder, push it up.

⚠ WARNING

- **Do not keep objects except sunglasses inside the sunglass holder. Such objects can be thrown from the holder in the event of a sudden stop or an accident, possibly injuring the passengers in the vehicle.**
- **Do not open the sunglass holder while the vehicle is moving. The rear view mirror of the vehicle can be blocked by an opened sunglass holder.**
- **Do not put the glasses forcibly into a sunglass holder to prevent breakage or deformation of the glasses. It may cause personal injury if you try to open it forcibly when the glasses are jammed in the holder.**

Luggage box

You can place tools, etc. in the box for easy access.
Grasp the handle (1) on the edge of the cover and lift it.

INTERIOR FEATURES

Ashtray (if equipped)

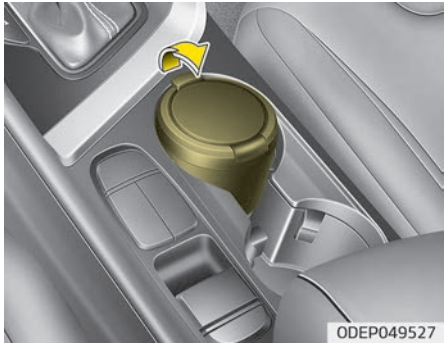

To use the ashtray, open the cover.
To clean or empty the ashtray, pull it out.

⚠ WARNING

■ Ashtray use

- **Do not use the vehicle's ashtrays as waste receptacles.**

(Continued)

(Continued)

- **Putting lit cigarettes or matches in an ashtray with other combustible materials may cause a fire.**

Cup holder

⚠ WARNING

■ Hot liquids

- **Do not place uncovered cups of hot liquid in the cup holder while the vehicle is in motion. If the hot liquid spills, you may burn yourself. Such a burn to the driver could lead to loss of control of the vehicle.**
- **To reduce the risk of a personal injury in the event of a sudden stop or collision, do not place uncovered or unsecured bottles, glasses, cans, etc., in the cup holder while the vehicle is in motion.**

(Continued)

(Continued)

- **If uncovered cups and cans containing any form of liquid are put into the front/center seat cup holders and the vehicle brakes heavily, the liquid may flow into the narrow openings around cup holders and console, and soak into the vehicle's internal electrical system.**
  To avoid subsequent system malfunction, always firmly cover any container holding liquid.

⚠ WARNING

Keep cans or bottles out of direct sun light and do not put them in a vehicle that is heated up. It may explode.

✻ NOTICE

- Keep your drinks sealed while driving to prevent spilling your drink. If liquid spills, it may get into the vehicle's electrical/electronic system and damage electrical/electronic parts.
- When cleaning spilled liquids, do not dry the cup holder at high temperature. This may damage the cup holder.

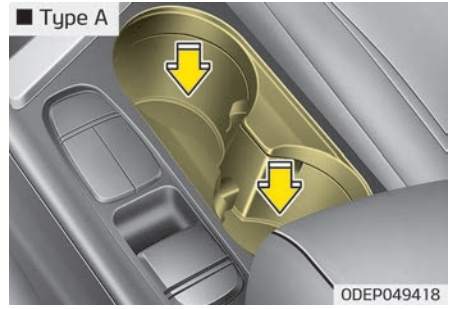

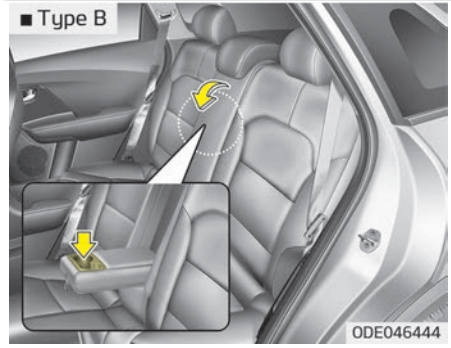

Cups or small beverage cans may be placed in the cup holders.

Sun visor

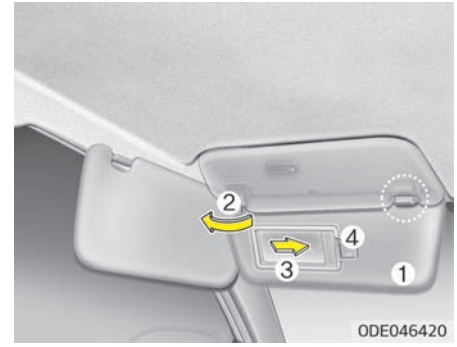

Use the sun visor to shield direct light through the front or side windows.
To use the sun visor, pull it downward.
To use the sun visor for the side window, pull it downward, unsnap it from the bracket (1) and swing it to the side (2).
To use the vanity mirror, pull down the visor and slide the mirror cover (3).
The ticket holder (4) is provided for holding a tollgate ticket.

⚠ CAUTION

■ Vanity mirror lamp

If you use the vanity mirror lamp, turn off the lamp before returning the sun visor to its original position, otherwise it could result in battery discharge and possible sun visor damage.

Seat warmer (if equipped)

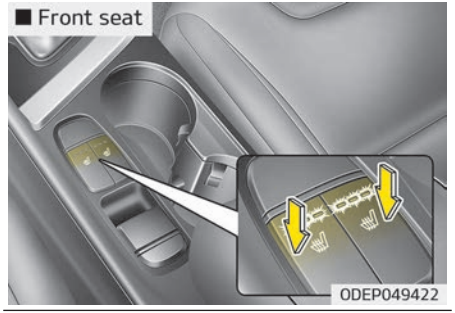

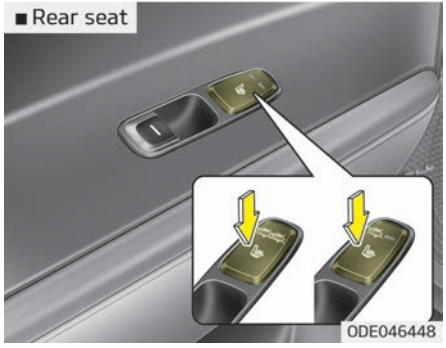

The seat warmer is provided to warm the front seats during cold weather. With the ignition switch in the ON position, push either of the switches to warm the driver's seat or the front passenger's seat.
During mild weather or under conditions where the operation of the seat warmer is not needed, keep the switches in the "OFF" position.

▶ *Temperature control (Manual)*

- Each time you press the switch, the temperature setting of the seat will change as follows:

Front seat OFF→HIGH( )→MIDDLE( )→LOW( )

Rear seat OFF→HIGH( )→LOW( )

- The seat warmer defaults to the OFF position whenever the ignition switch is turned on.

▶ *Temperature control (Automatic)*

The seat warmer starts to automatically control the seat temperature in order to prevent low-temperature burns after being manually turned ON.

Front seat OFF → HIGH( )→MIDDLE( )→LOW( )

30min 60min

Rear seat OFF→HIGH( )→LOW( )

30min

You may manually press the button to increase the seat temperature. However, it soon returns to the automatic mode again.

- When pressing the switch for more than 1.5 seconds with the seat warmer operating, the seat warmer will turn OFF.
- The seat warmer defaults to the OFF position whenever the Engine Start/Stop button is in the ON position.

NOTICE

With the seat warmer switch in the ON position, the heating system in the seat turns off or on automatically depending on the seat temperature.

⚠ CAUTION

- **When cleaning the seats, do not use an organic solvent such as paint thinner, benzene, alcohol and gasoline. Doing so may damage the surface of the heater or seats.**
- **To prevent overheating the seat warmer, do not place anything on the seats that insulates against heat, such as blankets, cushions or seat covers while the seat warmer is in operation.**
- **Do not place heavy or sharp objects on seats equipped with seat warmers. Damage to the seat warming components could occur.**
- **Do not change the seat cover. It may damage the seat warmer or air ventilation system.**

⚠ WARNING

■ Seat warmer burns

(Continued)

(Continued)

Passengers should use extreme caution when using seat warmers due to the possibility of excess heating or burns. The seat warmer may cause burns even at low temperatures, especially if used for long periods of time. In particular, the driver must exercise extreme care for the following types of passengers:

1. **Infants, children, elderly or handicapped persons, or hospital outpatients**
2. **Persons with sensitive skin or those that burn easily**
3. **Fatigued individuals**
4. **Intoxicated individuals**
5. **Individuals taking medication that can cause drowsiness or sleepiness (sleeping pills, cold tablets, etc.)**

Air ventilation seat (if equipped)

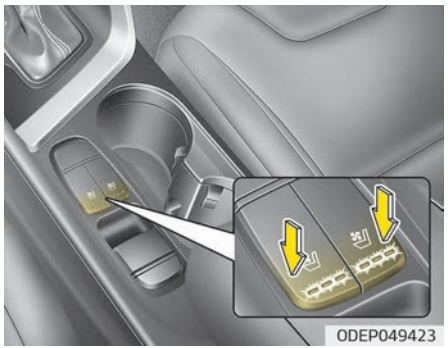

The temperature setting of the seat changes according to the switch position.

- If you want to warm your seat cushion, press the switch (red color).
- If you want to ventilate your seat cushion, press the switch (blue color).
- Each time you press the button, the airflow will change as follows:

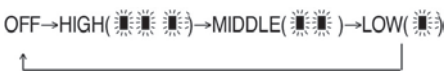

- The seat warmer (with air ventilation) defaults to the OFF position whenever the ignition switch is turned on.

⚠ CAUTION

When cleaning the seats, do not use an organic solvent such as paint thinner, benzene, alcohol and gasoline. Doing so may damage the surface of the heater or seats.

Power outlet

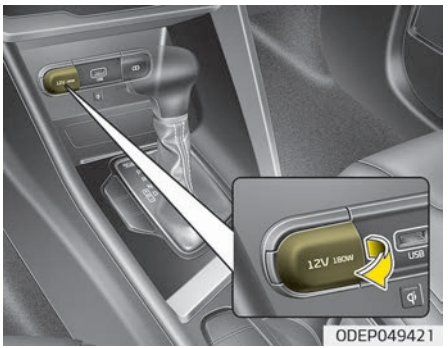

The power outlet is designed to provide power for mobile telephones or other devices designed to operate with vehicle electrical systems. The devices should draw less than 10 amps with the engine running.

⚠ CAUTION

- Use the power outlet only when the engine is running and remove the accessory plug after use. Using the accessory plug for prolonged periods of time with the engine off could cause the battery to discharge.
- Only use 12V electric accessories which are less than 10A in electric capacity.
- Adjust the air-conditioner or heater to the lowest operating level when using the power outlet.
- Close the cover when not in use.
- Some electronic devices can cause electronic interference when plugged into a vehicle's power outlet. These devices may cause excessive audio static and malfunctions in other electronic systems or devices used in your vehicle.

(Continued)

(Continued)

- Refrain from using the heater or A/C if you need to use the multipurpose socket. If the heater or A/C has to be used simultaneously, have it to the lowest setting.
- Some add-on electrical equipment will induce electromagnetic interference. This will lead to subsequent malfunction or hinder good reception of the Audio/Video and electrical system.
- Always make sure that electric add-ons are fully plugged into the multipurpose sockets. Insecure contacts may lead to electrical malfunctions.

⚠ WARNING

Do not put a finger or a foreign element (pin, etc.) into a power outlet and do not touch with a wet hand. You may get an electric shock.

USB charger (if equipped)

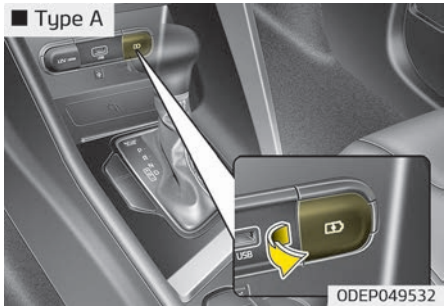

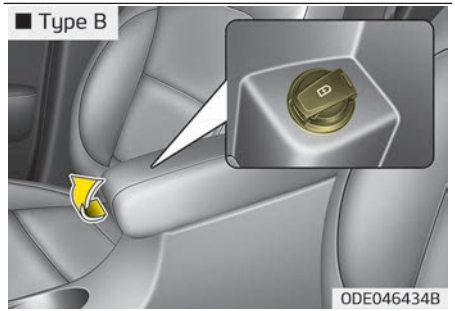

The USB charger is designed to recharge batteries of small size electrical devices using a USB cable. The electrical devices can be recharged when the Engine Start/Stop button is in ACC/ON/START position.

The battery charging state may be monitored on the electrical device.
Disconnect the USB cable from the USB port after use.

- Some devices are not supported for fast charging but will be charged with normal speed.
- Use the USB charger when the engine is running to prevent battery discharge.
- Only devices that fits the USB port can be used.
- The USB charger can be used only for battery charging purposes.
- Battery chargers cannot be charged.

AC inverter (if equipped)

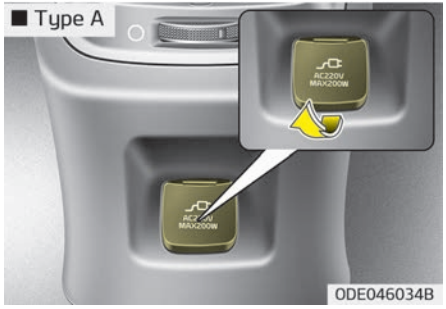

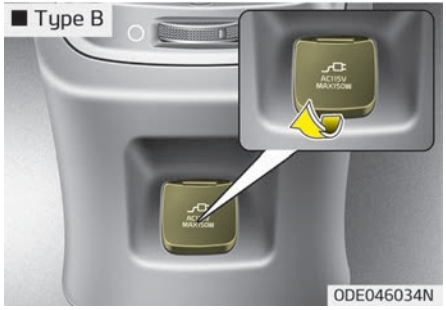

The AC inverter supplies 220V/200W or 115V/150W electric power to operate electric accessories or equipment.

If you wish to use the AC inverter, open up the AC inverter cover and connect a plug to it. The AC inverter supplies electric power when engine is running.

✻ NOTICE

- Rated voltage : AC 220V or 115V
- Maximum electric power : 200W or 150W
- In order to avoid an electrical system failure, electric shock, etc., be sure to read owner's manual before use.
- Be sure to close the cover except for when in use.

- To prevent the battery from being discharged, do not use the AC inverter while the engine is not running.
- After using an electric accessory or equipment, pull the plug out. Leaving the accessory or equipment plugged in for a long time may cause battery discharge.

- Do not use an electric accessory or equipment the power consumption of which is greater than 200W (220V) or 150W (115V).
- When the AC inverter input voltage is less than 11.3V, automatically turn off the power.
  AC inverter will operate as normal when the voltage is increased.
- When the AC inverter input voltage is less than 10.7V, power will turn off. The AC inverter will operate as normal when the voltage is increased.
- While the power consumption of some electrical devices/appliances may be within the AC inverter's electric power range, it may malfunction in below cases.
  - If the device/appliance requires high electric power for initial start up
  - If the device/appliance processes precise/very accurate data
  - If the device/appliance requires very stable supply of electricity

⚠ **CAUTION**

■ **Electric accessory devices**

- **Do not use broken electric accessories which may damage the AC inverter and electrical systems of the vehicle.**
- **Do not use two or more electric accessories at the same time. It may cause damage to the electrical systems of the vehicle.**

Wireless smart phone charging system (if equipped)

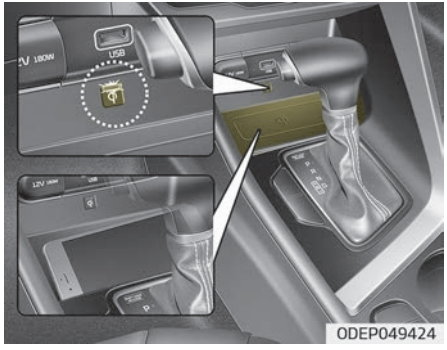

A wireless smart phone charging system located in front of the center console.
Firmly close all doors, and turn the ignition to ACC or IGN ON. To start wireless charging, place the smart phone equipped with wireless charging function on the wireless charging pad.
For best wireless charging results, place the smart phone on the center of the charging pad.

The wireless charging system is designed for one smart phone equipped with QI per single usage only. Please refer to the smart phone accessory cover or the smart phone manufacturer homepage to check whether your smart phone supports QI function.

Wireless smart phone charging

1. Remove any object on the smart phone charging pad including the smart key. If there is any foreign object on the pad other than a smart phone, the wireless charging function may not operate properly.
2. Place the smart phone on the center of the wireless charging pad.
3. The indicator light will change to orange once the wireless charging begins. After the charging is complete, the orange light will change to green.
4. You can choose to turn the wireless charging function to either ON or OFF by selecting the USM on the instrument cluster. (Please refer to "Instrument cluster" on page 5-50 for details).

If the wireless charging does not work, gently move your smart phone around the pad until the charging indicator light turns orange. Depending on the smart phone, the charging indicator light may not turn green even after the charging is complete.
If the wireless charging is not functioning properly, the orange light will blink and flash for ten seconds then turn off. In such cases, remove the smart phone from the pad and replace it on the pad again, or double check the charging status.
If you leave the smart phone on the charging pad when the vehicle ignition is in OFF, the vehicle will alert you through warning messages and sound (applicable for vehicles with voice guidance (function) after the 'Good bye' function on the instrument cluster ends.

⚠ CAUTION

- **When the interior temperature of the wireless charging system rises above a set temperature, the wireless charging will cease to function. After the interior temperature drops below the threshold, the wireless charging function will resume.**
- **If any metallic object such as coins is located between the wireless charging system and the smart phone, the charging may be disrupted. Also, the metallic object may heat up.**
- **If there is any metallic object between the smart phone and the wireless charging pad, immediately remove the smart phone. Remove the metallic object after it has completely cooled down.**
- **The wireless charging may not function properly when there is a heavy accessory cover on the smart phone.**

(Continued)

(Continued)

- **The wireless charging will stop when using the wireless smart key search function to prevent radio wave disruption.**
- **The wireless charging will stop when the smart key is moved out of the vehicle with the ignition in ON.**
- **The wireless charging will stop when any of the doors is opened (applicable for vehicles equipped with smart keys).**
- **The wireless charging will stop when the vehicle is turned OFF.**
- **The wireless charging will stop when the smart phone is not in complete contact with the wireless charging pad.**
- **Items equipped with magnetic components such as credit card, telephone card, bankbook, any transportation ticket and such may become damaged during wireless charging.**

(Continued)

(Continued)

- **Place the smart phone on the center of the charge pad for best results. The smart phone may not charge when placed near the rim of the charging pad. When the smart phone does get charged, it may heat up excessively.**
- **For smart phones without built-in wireless charging system, an appropriate accessory has to be equipped.**
- **Smart phones of some manufacturers may display messages on weak current. This is due to the particular characteristic of the smart phone and does not imply a malfunction on wireless charging function.**
- **The indicator light of some manufacturers' smart phones may still be orange after the smart phone is fully charged. This is due to the particular characteristic of the smart phone and not a malfunction of the wireless charging.**

(Continued)

(Continued)

- **When any smart phone without a wireless charging function or a metallic object is placed on the charging pad, a small noise may sound. This small sound is due to the vehicle discerning compatibility of the object placed on the charging pad. It does not affect your vehicle or the smart phone in any way.**

Clothes hanger

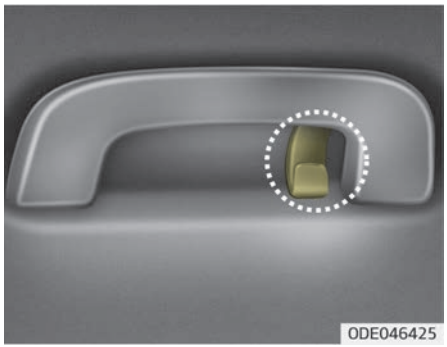

❊ This actual feature may differ from the illustration.

A coat hook is next to the rear grab handle.

⚠ CAUTION

Do not hang heavy clothes, since those may damage the hook.

⚠ WARNING

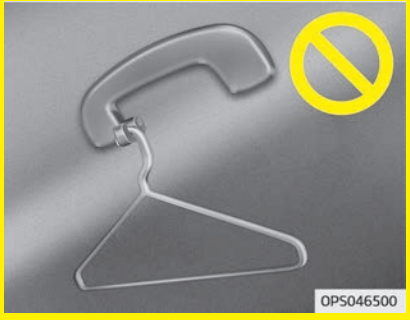

Do not hang other objects such as hangers or hard objects except clothes. Also, do not put heavy, sharp or breakable objects in the clothe pockets. In an accident or

(Continued)

(Continued)

when the curtain air bag is inflated, it may cause vehicle damage or personal injury.

Floor mat anchor(s) (if equipped)

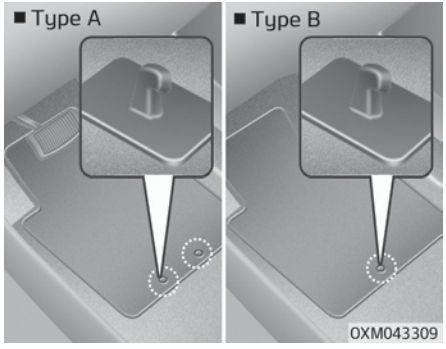

When using a floor mat on the front floor carpet, make sure it attaches to the floor mat anchor(s) in your vehicle. This keeps the floor mat from sliding forward.

⚠ WARNING

The following must be observed when installing ANY floor mat to the vehicle.

- **Ensure that the floor mats are securely attached to the vehicle's floor mat anchor(s) before driving the vehicle.**
- **Do not use ANY floor mat that cannot be firmly attached to the vehicle's floor mat anchors.**
- **Do not stack floor mats on top of one another (e.g. all-weather rubber mat on top of a carpeted floor mat). Only a single floor mat should be installed in each position.**

IMPORTANT - Your vehicle was manufactured with driver's side floor mat anchors that are designed to securely hold the floor mat in place. To avoid any interference with pedal operation, Kia recommends that the Kia floor mat designed for use in your vehicle be installed.

Luggage net holder (if equipped)

To keep items from shifting in the cargo area, you can use the holders located in the cargo area to attach the luggage net.
If necessary, Kia recommends to contact an authorized Kia dealer/service partner.

⚠ CAUTION

To prevent damage to the goods or the vehicle, care should be taken when carrying fragile or bulky objects in the luggage compartment.

⚠ WARNING

To avoid eye injury, DO NOT overstretch the luggage net. ALWAYS keep your face and body out of the luggage net's recoil path. DO NOT use the luggage net when the strap has visible signs of wear or damage.

Cargo security screen (if equipped)

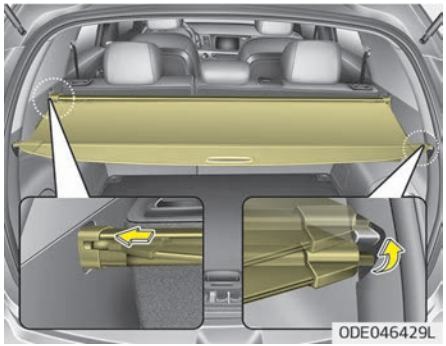

Use the cargo security screen to hide items stored in the cargo area.

To use the cargo security screen, pull the handle backward and insert the edges into the slots.

⚠ WARNING

- **Do not place objects on the cargo security screen. Such objects may be thrown about inside the vehicle and possibly injure vehicle occupants during an accident or when braking.**
- **Never allow anyone to ride in the luggage compartment. It is designed for luggage only.**
- **Maintain the balance of the vehicle and locate the weight as far forward as possible.**

⚠ CAUTION

Since the cargo security screen may be damaged or malformed, do not put the luggage on it when it is used.

EXTERIOR FEATURES

Roof rack (if equipped)

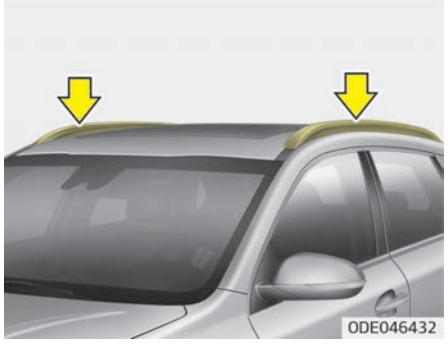

If the vehicle has a roof rack, you can load cargo on top of your vehicle.
Crossbars and fixing components needed to install the roof rack on your vehicle may be obtained from an authorized Kia dealer/service partner or other qualified shop.

✻ NOTICE

- The crossbars (if equipped) should be placed in the proper load carrying positions prior to placing items onto the roof rack.
- If the vehicle is equipped with a sunroof, be sure not to position cargo onto the roof rack in such a way that it could interfere with sunroof operation.
- When the roof rack is not being used to carry cargo, the crossbars may need to be repositioned if wind noise is detected.

⚠ CAUTION

- **When carrying cargo on the roof rack, take the necessary precautions to make sure the cargo does not damage the roof of the vehicle.**

(Continued)

(Continued)

- **When carrying large objects on the roof rack, make sure they do not exceed the overall roof length or width.**
- **When you are carrying cargo on the roof rack, do not operate the sunroof (if equipped).**

⚠ WARNING

- **The following specification is the maximum weight that can be loaded onto the roof rack. Distribute the load as evenly as possible across the crossbars (if equipped) and roof rack and secure the load firmly.**

ROOF RACK	100 kg (220 lbs.) EVENLY DISTRIBUTED

Loading cargo or luggage in excess of the specified weight limit on the roof rack may damage your vehicle.

(Continued)

(Continued)

- **The vehicle center of gravity will be higher when items are loaded onto the roof rack. Avoid sudden starts, braking, sharp turns, abrupt maneuvers or high speeds that may result in loss of vehicle control or roll-over resulting in an accident.**
- **Always drive slowly and turn corners carefully when carrying items on the roof rack. Severe wind updrafts, caused by passing vehicles or natural causes, can cause sudden upward pressure on items loaded on the roof rack. This is especially true when carrying large, flat items such as wood panels or mattresses. This could cause the items to fall off the roof rack and cause damage to your vehicle or others around you.**
- **To prevent damage or loss of cargo while driving, check frequently before or while driving to make sure the items on the roof rack are securely fastened.**

AUDIO SYSTEM

✻ NOTICE

If you install an after market HID head lamp, your vehicle's audio and electronic device may malfunction.

✻ If your vehicle is equipped with Infotainment system, refer to a separately supplied manual for detailed information.

Antenna

The roof antenna transmits and receives wireless signals such as AM/FM, Sirius XM, GNSS, etc.

✻ The signals which antenna can transmit and receive vary by the vehicle option.

USB port

You can use a USB port to plug in a USB or or iPod®.

✻ iPod® is a trademark of Apple Inc.

How vehicle radio works

FM reception

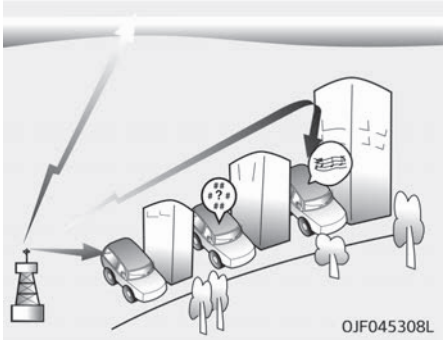

AM and FM radio signals are broadcast from transmitter towers located around your city. They are intercepted by the radio antenna on your vehicle. This signal is then processed by the radio and sent to your vehicle speakers.
However, in some cases the signal coming to your vehicle may not be strong and clear.
This can be due to factors, such as the distance from the radio station, closeness of other strong radio stations or the presence of buildings, bridges or other large obstructions in the area.

AM reception

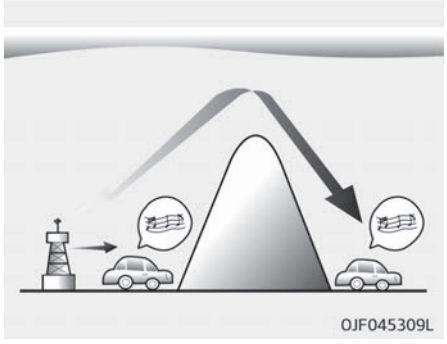

AM broadcasts can be received at greater distances than FM broadcasts. This is because AM radio waves are transmitted at low frequencies. These long distance, low frequency radio waves can follow the curvature of the earth rather than travelling straight. In addition, they curve around obstructions resulting in better signal coverage.

FM radio station

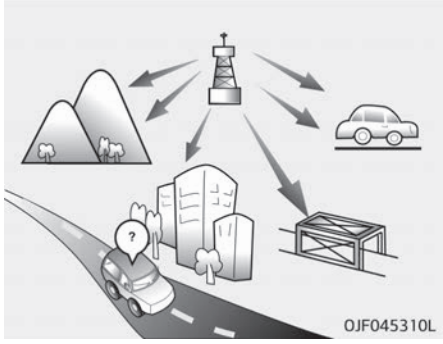

FM broadcasts are transmitted at high frequencies and do not bend to follow the earth's surface. Because of this, FM broadcasts generally begin to fade within short distances from the station. Also, FM signals are easily affected by buildings, mountains, and obstructions. This can lead to undesirable or unpleasant listening conditions which might lead you to believe a problem exists with your radio. The following conditions are normal and do not indicate radio trouble:

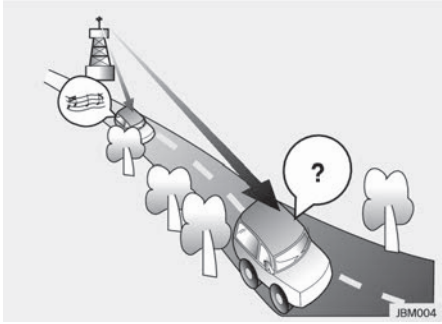

- Fading - As your vehicle moves away from the radio station, the signal will weaken and sound will begin to fade. When this occurs, we suggest that you select another station with a stronger signal.

- Flutter/Static - Weak FM signals or large obstructions between the transmitter and your radio can disturb the signal causing static or fluttering noises to occur. Reducing the treble level may lessen this effect until the disturbance clears.

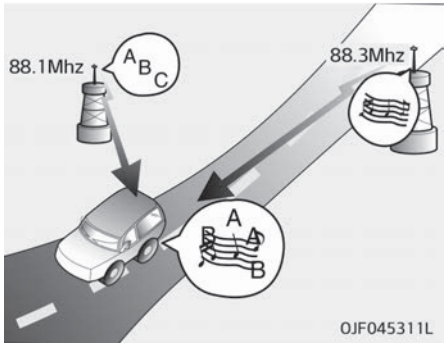

- Station Swapping - As an FM signal weakens, another more powerful signal near the same frequency may begin to play. This is because your radio is designed to lock onto the clearest signal. If this occurs, select another station with a stronger signal.

- Multi-Path Cancellation - Radio signals being received from several directions can cause distortion or fluttering. This can be caused by a direct and reflected signal from the same station, or by signals from two stations with close frequencies. If this occurs, select another station until the condition has passed.

Using a cellular phone or a two-way radio

When a cellular phone is used inside the vehicle, noise may be produced from the audio system. This does not mean that something is wrong with the audio equipment. In such a case, try to operate mobile devices as far from the audio equipment as possible.
When using a communication system such as a cellular phone or a radio set inside the vehicle, a separate external antenna must be fitted. When a cellular phone or a radio set is used with an internal antenna alone, it may interfere with the vehicle's electrical system and adversely affect safe operation of the vehicle.

⚠ WARNING

■ Cell phone use

Do not use a cellular phone while driving. Stop at a safe location to use a cellular phone.

⚠ WARNING

■ Distracted driving

Driving while distracted can result in a loss of vehicle control that may lead to an accident, severe bodily injury, or death. The driver's primary responsibility is the safe and legal operation of the vehicle, and the use of any handheld devices, other equipment, or vehicle systems which take the driver's eyes, attention, and focus away from the safe operation of the vehicle, or which are not permissible by law, should never be used during the operation of the vehicle.

Driving your vehicle

Before driving..... 6-06
Before entering vehicle..... 6-06
Necessary inspections..... 6-06
Before starting..... 6-06
Key positions..... 6-08
Illuminated ignition switch 6-08
Ignition switch position..... 6-08
Starting the hybrid system..... 6-09
Engine Start/Stop button..... 6-11
Illuminated ENGINE START/STOP button..... 6-11
ENGINE START/STOP button position..... 6-11
Starting the hybrid system..... 6-13
Dual clutch transmission (DCT)..... 6-16
Dual clutch transmission operation..... 6-16
Paddle shifter 6-22
Shift lock system..... 6-22
Good driving practices..... 6-23
Regenerative braking system..... 6-25
Regenerative Braking (Paddle Shifter)..... 6-25
Brake system..... 6-28
Power brakes..... 6-28
Foot parking brake..... 6-29
Electronic Parking Brake (EPB) 6-31
AUTO HOLD 6-36
Warning messages..... 6-38
Anti-lock brake system (ABS)..... 6-39
Electronic stability control (ESC) 6-41
Vehicle stability management (VSM) 6-44
Hill-start assist control (HAC)..... 6-45
Emergency stop signal (ESS) 6-46
Good braking practices..... 6-46
Forward Collision-Avoidance Assist (FCA) (Sensor Fusion)..... 6-48
Forward Collision-Avoidance Assist setting and activation..... 6-48
Forward Collision-Avoidance Assist warning message and function control..... 6-50
Brake operation..... 6-51
Detecting sensors (Front view camera + Front radar)... 6-52
Function malfunction..... 6-54
Limitation of Forward Collision-Avoidance Assist..... 6-56
Recognizing pedestrian or cyclist..... 6-60
Lane Keeping Assist (LKA) 6-62
LKA operation..... 6-63
Lane Keeping Assist malfunction..... 6-68
Blind-Spot Collision Warning (BCW) 6-69
Setting and activation..... 6-69
Warning message and function control..... 6-70
Manual Speed Limit Assist (MSLA) 6-78
To set speed limit..... 6-78
To turn off Manual Speed Limit Assist..... 6-79
Intelligent Speed Limit Warning (ILSW) 6-81
Intelligent Speed Limit Warning activation / de-activation..... 6-81
Operation..... 6-82
Display..... 6-82
Driver's attention..... 6-84
Driver Attention Warning (DAW) 6-86
Basic function..... 6-86
Leading vehicle departure alert function..... 6-86

Driver Attention Warning setting and activation..... 6-86
Resetting the function..... 6-87
Driver Attention Warning standby..... 6-88
Driver Attention Warning malfunction..... 6-88
Leading vehicle departure warning..... 6-89
Cruise Control (CC) 6-91
Driving Assist button..... 6-92
To set Cruise Control speed..... 6-92
To increase Cruise Control set speed..... 6-92
To decrease the cruising speed..... 6-93
To temporarily accelerate with Cruise Control on..... 6-93
To cancel Cruise Control..... 6-93
To resume cruising speed..... 6-94
To turn Cruise Control off..... 6-94
Smart Cruise Control (SCC) 6-95
Speed setting..... 6-96
Vehicle distance setting..... 6-100
When the lane ahead is clear 6-100
When there is a vehicle ahead of you in your lane..... 6-101
Set Smart Cruise Control Reaction..... 6-106
To convert to Cruise Control mode..... 6-106
Limitations of Smart Cruise Control..... 6-106
Lane Following Assist (LFA) 6-111
Lane Following Assist operation..... 6-112
Lane Following Assist malfunction..... 6-114
Limitation of Lane Following Assist..... 6-115
Rear Cross-Traffic Collision Warning (RCCW) 6-117
Rear Cross-Traffic Collision Warning setting and activation..... 6-117
Warning..... 6-118
Declaration of conformity 6-125
The radio frequency components (Front Radar) complies..... 6-125
The radio frequency components (Rear Corner Radar) complies..... 6-130
Economical operation..... 6-136
Special driving conditions..... 6-138
Hazardous driving conditions..... 6-138
Reducing the risk of a rollover..... 6-138
Rocking the vehicle..... 6-139
Smooth cornering..... 6-140
Driving at night..... 6-140
Driving in the rain..... 6-140
Driving in flooded areas..... 6-141
Driving off-road..... 6-141
Highway driving..... 6-141
Winter driving..... 6-142
Snowy or icy conditions..... 6-142
Use high quality ethylene glycol coolant..... 6-144
Check battery and cables..... 6-144
Change to "winter weight" oil if necessary..... 6-144
Check spark plugs and ignition system..... 6-144
To keep locks from freezing..... 6-144
Use approved window washer anti-freeze in system..6-145
Don't let your parking brake freeze..... 6-145
Don't let ice and snow accumulate underneath..... 6-145
Carry emergency equipment..... 6-145
Trailer towing..... 6-146
Hitches..... 6-147
Safety chains..... 6-148

Trailer brakes.....6-148
Driving with a trailer..... 6-149
Maintenance when trailer towing.....6-152
If you do decide to pull a trailer..... 6-153
Vehicle weight..... 6-156
Base curb weight..... 6-156
Vehicle curb weight..... 6-156
Cargo weight.....6-156
GAW (Gross axle weight).....6-156
GAWR (Gross axle weight rating).....6-156
GVW (Gross vehicle weight).....6-156
GVWR (Gross vehicle weight rating).....6-156
Overloading..... 6-156

⚠ WARNING

■ ENGINE EXHAUST CAN BE DANGEROUS!

Engine exhaust fumes can be extremely dangerous. If, at any time, you smell exhaust fumes inside the vehicle, open the windows immediately.

- **Do not inhale exhaust fumes.**
  Exhaust fumes contain carbon monoxide, a colorless, odorless gas that can cause unconsciousness and death by asphyxiation.
- **Be sure the exhaust system does not leak.**
  The exhaust system should be checked whenever the vehicle is raised to change the oil or for any other purpose.
  If you hear a change in the sound of the exhaust or if you drive over something that strikes the underneath side of the vehicle, have the system checked by a professional workshop. Kia recommends to visit an authorized Kia dealer/service partner.
- **Do not run the engine in an enclosed area.**
  Letting the engine idle in your garage, even with the garage door open, is a hazardous practice. Never run the engine in your garage any longer than it takes to start the engine and back the vehicle out.
- **Avoid idling the engine for prolonged periods with people inside the vehicle.**
  If it is necessary to idle the engine for a prolonged period with people inside the vehicle, be sure to do so only in an open area with the air intake set at "Fresh" and fan operating at one of the higher speeds so fresh air is drawn into the interior.

If you must drive with the tailgate open because you are carrying objects that make this necessary:

1. **Close all windows.**
2. **Open side vents.**
3. **Set the air intake control at "Fresh", the air flow control at "Floor" or "Face" and the fan at one of the higher speeds.**

(Continued)

(Continued)

To assure proper operation of the ventilation system, be sure the ventilation air intakes located just in front of the windshield are kept clear of snow, ice, leaves or other obstructions.

BEFORE DRIVING

Before entering vehicle

- Be sure that all windows, outside mirror(s), and outside lights are clean.
- Check the condition of the tires.
- Check under the vehicle for any sign of leaks.
- Be sure there are no obstacles behind you if you intend to back up.

Necessary inspections

Fluid levels, such as engine oil, engine coolant, brake fluid, and washer fluid should be checked on a regular basis, with the exact interval depending on the fluid. Further details are provided in Chapter 8, Maintenance.

⚠ WARNING

Driving while distracted can result in a loss of vehicle control, that may lead to an accident, severe personal injury, and death. The driver's primary responsibility is in the safe and legal operation of a vehicle, and use of any handheld devices, other equipment, or vehicle systems which

(Continued)

(Continued)

take the driver's eyes, attention and focus away from the safe operation of a vehicle or which are not permissible by law should never be used during operation of the vehicle.

Before starting

- Close and lock all doors.
- Position the seat so that all controls are easily reached.
- Adjust the inside and outside rear-view mirrors.
- Be sure that all lights work.
- Check all gauges.
- Check the operation of warning lights when the ignition switch is turned to the ON position.
- Release the parking brake and make sure the brake warning light goes out.

For safe operation, be sure you are familiar with your vehicle and its equipment.

⚠ WARNING

All passengers must be properly belted whenever the vehicle is moving. Refer to "Seat belts" on page 4-17 for more information on their proper use.

⚠ WARNING

Always check the surrounding areas near your vehicle for people, especially children, before putting a vehicle into "D (Drive)" or "R (Reverse)".

⚠ WARNING

■ Driving under the influence of alcohol or drugs

Drinking and driving is dangerous. Drunk driving is the number one contributor to the highway death toll each year. Even a small amount of alcohol will affect your reflexes, perceptions and judgement. Driving

(Continued)

(Continued)

while under the influence of drugs is as dangerous or more dangerous than driving drunk.
You are much more likely to have a serious accident if you drink or take drugs and drive.
If you are drinking or taking drugs, don't drive. Do not ride with a driver who has been drinking or taking drugs. Choose a designated driver or call a cab.

⚠ WARNING

- When you intend to park or stop the vehicle with the engine on, be careful not to depress the accelerator pedal for a long period of time. It may overheat the engine or exhaust system and cause fire.

(Continued)

(Continued)

- When you make a sudden stop or turn the steering wheel rapidly, loose objects may drop on the floor and it could interfere with the operation of the foot pedals, possibly causing an accident. Keep all things in the vehicle safely stored.
- If you do not focus on driving, it may cause an accident. Be careful when operating what may disturb driving such as audio or heater. It is the responsibility of the driver to always drive safely.

KEY POSITIONS

Illuminated ignition switch (If equipped)

Whenever a front door is opened, the ignition switch will be illuminated for your convenience, provided the ignition switch is not in the ON position. The light will go off immediately when the ignition switch is turned on or go off after about 30 seconds when the door is closed.

Ignition switch position

LOCK

The steering wheel locks to protect against theft. The ignition key can be removed only in the LOCK position.

ACC (Accessory)

The steering wheel is unlocked and electrical accessories are operative.

✻ NOTICE

If difficulty is experienced turning the ignition switch to the ACC position, turn the key while turning the steering wheel right and left to release the tension.

ON

The warning lights can be checked before the engine is started. This is the normal running position after the engine is started.

Do not leave the ignition switch ON if the engine is not running to prevent battery discharge.

START

Turn the ignition key to the START position to start the engine. The engine will crank until you release the key; then it returns to the ON position. The brake warning lamp can be checked in this position.

⚠ WARNING

■ Ignition key

- **Never turn the ignition switch to LOCK or ACC while the vehicle is moving. This would result in loss of directional control and braking function, which could cause an accident.**
- **The anti-theft steering column lock (if equipped) is not a substitute for the parking brake. Before leaving the driver's seat, always make sure the shift lever is engaged in P (Park) for the dual clutch transmission, set the parking brake fully and shut the engine off. Unexpected and sudden vehicle movement may occur if these precautions are not taken.**

(Continued)

(Continued)

- **Never reach for the ignition switch, or any other controls through the steering wheel while the vehicle is in motion. The presence of your hand or arm in this area could cause a loss of vehicle control, an accident and serious bodily injury or death.**
- **Do not place any movable objects around the driver's seat as they may move while driving, interfere with the driver and lead to an accident.**

Starting the hybrid system

⚠ WARNING

- **Always wear appropriate shoes when operating your vehicle. Unsuitable shoes, such as high heels, ski boots, sandals, flip-flops, etc., may interfere with your ability to use the brake and accelerator pedals.**

(Continued)

(Continued)

- **Do not start the vehicle with the accelerator pedal depressed.**
  The vehicle can move and lead to an accident.

✻ NOTICE

The hybrid system will start by turning the ignition switch to START.

1. Make sure the parking brake is applied.
2. Make sure the shift lever is in P (Park).
3. Depress the brake pedal.
4. Turn the ignition switch to START. If the hybrid system starts, the "" indicator will come on.

✻ NOTICE

- Do not wait for the engine to warm up while the vehicle remains stationary.
  Start driving at moderate engine speeds. (Steep accelerating and decelerating should be avoided.)
- Always start the vehicle with your foot on the brake pedal. Do not depress the accelerator while starting the vehicle. Do not race the engine while warming it up.
- If ambient temperature is low, the "" indicator may remain illuminated longer than the normal amount of time.

✻ NOTICE

To prevent damage to the vehicle:
(Continued)

(Continued)

- If the "" indicator turns off while you are in motion, do not attempt to move the shift lever to the P (Park) position.
  If traffic and road conditions permit, you may put the shift lever in the N (Neutral) position while the vehicle is still moving and turn the ignition switch to START. In an attempt to restart the hybrid system.
- Do not push or tow your vehicle to start the hybrid system.

ENGINE START/STOP BUTTON

Illuminated ENGINE START/STOP button

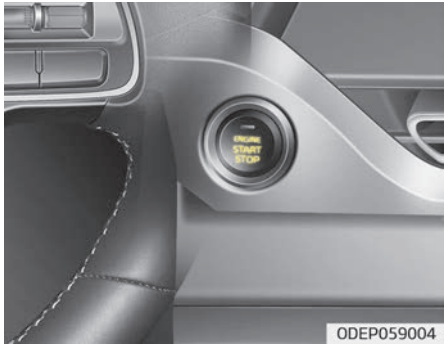

0DEP059004

Whenever the front door is opened, the ENGINE START/STOP button will illuminate for your convenience. The light will go off after about 30 seconds when the door is closed. It will also go off immediately when the ENGINE START/STOP button is ON position.

ENGINE START/STOP button position

OFF

Not illuminated

To turn off the engine (START/RUN position) or vehicle power (ON position), press the ENGINE START/STOP button with the shift lever in the P (Park) position. When you press the ENGINE START/STOP button without the shift lever in the P (Park) position, the ENGINE START/STOP button will not change to the OFF position but to the ACC position.

Vehicles equipped with anti-theft steering column lock

The steering wheel locks when the ENGINE START/STOP button is in the OFF position to protect you against theft.
It locks when the door is opened.
If the steering wheel is not locked properly when you open the driver's door, the warning chime will sound. Try locking the steering wheel again. If the problem is not solved, have the system checked by a professional workshop. Kia recommends to visit an authorized Kia dealer/service partner.

In addition, if the ENGINE START/STOP button is in the OFF position after the driver's door is opened, the steering wheel will not lock and the warning chime will sound. In such a situation, close the door. Then the steering wheel will lock and the warning chime will stop.

✻ NOTICE

If the steering wheel doesn't unlock properly, the ENGINE START/STOP button will not work. Press the engine start/stop button while turning the steering wheel right and left to release the tension.

⚠ CAUTION

You are able to turn off the engine (START/RUN) or vehicle power (ON), only when the vehicle is not in motion. In an emergency situation while the vehicle is in motion, you are able to turn the engine off and to the ACC position by pressing the ENGINE

(Continued)

(Continued)

START/STOP button for more than 2 seconds or 3 times successively within 3 seconds. If the vehicle is still moving, you can restart the engine without depressing the brake pedal by pressing the ENGINE START/STOP button with the shift lever in the N (Neutral) position.

ACC (Accessory)

Amber

Press the ENGINE START/STOP button while it is in the OFF position without depressing the brake pedal.
The steering wheel unlocks (if equipped with anti-theft steering column lock) and electrical accessories are operational.
If the ENGINE START/STOP button is in the ACC position for more than 1 hour, the button is turned off automatically to prevent battery discharge.

ON

Redish orange

Press the ENGINE START/STOP button while it is in the ACC position without depressing the brake pedal.

The warning lights can be checked before the engine is started. Do not leave the ENGINE START/STOP button in the ON position for a long time. The battery may discharge, because the engine is not running.

START/RUN

Not illuminated

To start the engine, depress the brake pedal and press the ENGINE START/STOP button with the shift lever in the P (Park) or the N (Neutral) position. For your safety, start the engine with the shift lever in the P (Park) position.

✻ NOTICE

If you press the ENGINE START/STOP button without depressing the brake pedal for dual clutch transmission vehicles, the engine will not start and the ENGINE START/STOP button changes as follow:
OFF ➔ACC ➔ ON ➔ OFF or ACC

✻ NOTICE

If you leave the ENGINE START/STOP button in the ACC or ON position for a long time, the battery will discharge.

⚠ WARNING

- **Never press the ENGINE START/STOP button while the vehicle is in motion. This would result in loss of directional control and braking function, which could cause an accident.**
- **The anti-theft steering column lock (if equipped) is not a substitute for the parking brake. Before leaving the driver's seat, always make sure the shift lever is engaged in P (Park), set the parking brake fully and shut the engine off. Unexpected and sudden vehicle movement may occur if these precautions are not taken.**

(Continued)

(Continued)

- **Never reach for the ENGINE START/STOP button or any other controls through the steering wheel while the vehicle is in motion. The presence of your hand or arm in the area could cause loss of vehicle control, an accident and serious bodily injury or death.**
- **Do not place any movable objects around the driver's seat as they may move while driving, interfere with the driver and lead to an accident.**

Starting the hybrid system

⚠ WARNING

- **Always wear appropriate shoes when operating your vehicle. Unsuitable shoes, such as high heels, ski boots, sandals, flip-flops, etc., may interfere with your ability to use the brake and accelerator pedals.**

(Continued)

(Continued)

- **Do not start the vehicle with the accelerator pedal depressed.**
  The vehicle can move and lead to an accident.

✻ NOTICE

- The hybrid system will start by pressing the ENGINE START/STOP button, only when the smart key is in the vehicle.
- Even when the smart key is in the vehicle, and when it is far away from the driver, the hybrid system may not start.

(Continued)

(Continued)

- When the ENGINE START/STOP button is in the ACC or ON position, any door is open, the system checks for the smart key. When the smart key is not in the vehicle, the "🚗" indicator will blink and the warning "Key not in vehicle" will come on. When all doors are closed, the chime will also sound for about 5 seconds. Keep the smart key in the vehicle when in the ACC position or if the hybrid system is ON.

1. Always carry the smart key with you.
2. Make sure the parking brake is applied.
3. Make sure the shift lever is in P (Park).
4. Depress the brake pedal.
5. Press the ENGINE START/STOP button. If the hybrid system starts, the "🚗" indicator will come on.

✻ NOTICE

- Do not wait for the engine to warm up while the vehicle remains stationary.
  Start driving at moderate engine speeds. (Steep accelerating and decelerating should be avoided.)
- Always start the vehicle with your foot on the brake pedal. Do not depress the accelerator while starting the vehicle. Do not race the engine while warming it up.
- If ambient temperature is low, the "" indicator may remain illuminated longer than the normal amount of time.

✻ NOTICE

To prevent damage to the vehicle:
(Continued)

(Continued)

- If the "" indicator turns off while you are in motion, do not attempt to move the shift lever to the P (Park) position.
  If traffic and road conditions permit, you may put the shift lever in the N (Neutral) position while the vehicle is still moving and press the ENGINE START/STOP button in an attempt to restart the hybrid system.
- Do not push or tow your vehicle to start the hybrid system.

✻ NOTICE

- If the battery is weak or the smart key does not work correctly, you can start the engine by pressing the ENGINE START/STOP button with the smart key.
  The side with the lock button should be contacted directly.
  When you press the ENGINE START/STOP button directly with the smart key, the smart key should contact the button at a right angle.

(Continued)

(Continued)

- When the stop lamp fuse is blown, you cannot start the engine normally.
  Replace the fuse with a new one. If it is not possible, you can start the engine by pressing the ENGINE START/STOP button for 10 seconds while it is in the ACC position. The engine can start without depressing the brake pedal. But for your safety always depress the brake and clutch pedal before starting the engine.

⚠ CAUTION

Do not press the ENGINE START/STOP button for more than 10 seconds except when the stop lamp fuse is blown.

DUAL CLUTCH TRANSMISSION (DCT)

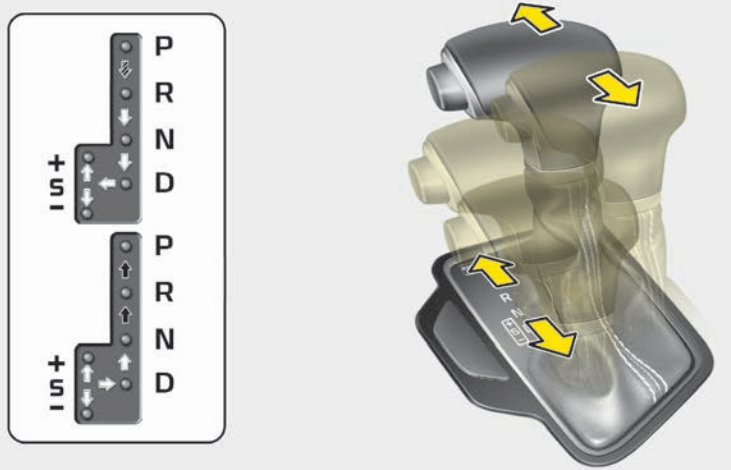

Depress the brake pedal and the lock release button when shifting.

Press the lock release button when shifting.

The shift lever can be shifted freely.

❋ To move the shift lever from/to P(Parking) or between R(Reverse) and D(Drive), you must depress the brake pedal for the vehicle to stand still.

ODEP051425

Dual clutch transmission operation

The dual clutch transmission has six forward speeds and one reverse speed. The individual speeds are selected automatically in the D (Drive) position.

⚠ WARNING

To reduce the risk of serious injury or death:

- **ALWAYS check the surrounding areas near your vehicle for people, especially children, before shifting a vehicle into D (Drive) or R (Reverse).**
- **Before leaving the driver's seat, always make sure the shift lever is in the P (Park) position, then set the parking brake, and place the ignition switch in the LOCK/OFF position. Unexpected and sudden vehicle movement can occur if these precautions are not followed.**

(Continued)

(Continued)

- **Do not use engine braking (shifting from a high gear to lower gear) rapidly on slippery roads. The vehicle may slip causing an accident.**

- The dual clutch transmission can be thought of as an automatically shifting manual transmission, yet provides the ease of a fully automatic transmission.
- When D (Drive) is selected, the transmission will automatically shift through the gears similar to a conventional automatic transmission. Unlike a traditional automatic transmission, the gear shifting can sometimes be felt and heard as the actuators engage the clutches and the gears are selected.
- The dual clutch transmission incorporates a dry-type dual clutch mechanism, which allows for better acceleration performance and increased fuel efficiency while driving. But it differs from a conventional automatic transmission because it does not incorporate a torque converter. Instead, the transition from one gear to the next is managed by clutch slip, especially at lower speeds. As a result, shifts are sometimes more noticeable, and a light vibration can be felt as the transmission shaft speed is matched with the engine shaft speed. This is a normal condition of the dual clutch transmission.
- The dry-type clutch transfers torque more directly and provides a direct-drive feeling which may feel different from a conventional automatic transmission. This may be more noticeable when launching the vehicle from a stop or when traveling at low, stop-and go vehicle speeds.
- When rapidly accelerating at a low vehicle speed, the engine rpm may increase highly depending on the vehicle's driving condition.
- For smooth launch uphill, press down the accelerator pedal smoothly depending on the current conditions.
- If you release your foot from the accelerator pedal at low vehicle speed, you may feel strong engine braking, which is similar to manual transmission.
- When driving downhill, you may use Sports Mode or press the paddle shifters(if equipped) to downshift to a lower gear in order to control your speed without using the brake pedal excessively.
- When you turn the engine on and off, you may hear clicking sounds as the system goes through a self-test. This is a normal sound for the dual clutch transmission.
- During the first 1,500 km, you may feel that the vehicle may not be smooth when accelerating at low speed. During this break-in period, the shift quality and performance of your new vehicle is continuously optimized.

DCT warning messages

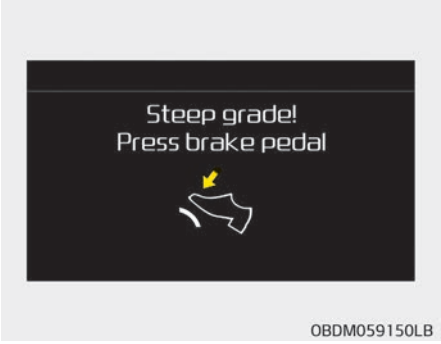

This warning message is displayed when the vehicle is driven slowly on a grade and the vehicle detects that the brake pedal is not applied.

Steep grade

Driving up hills or on steep grades:

- To hold the vehicle on an incline, use the foot brake or the parking brake.
- When in stop-and-go traffic on an incline, keep some distance ahead before moving the vehicle forward. Then hold the vehicle on the incline with the foot brake.
- If the vehicle is held on a hill by applying the accelerator pedal or by creeping with the brake pedal dis-engaged, the clutch and transmission may overheat which can result in damage. In this situation, a warning message will appear on the LCD display.
- If the LCD warning is active, the foot brake must be applied.
- Ignoring the warnings can lead to damage to the transmission.

Transmission high temperature

- Under certain conditions, such as repeated stop-and-go launches on steep grades, sudden take off or acceleration, or other harsh driving conditions, the transmission clutch temperatures will increase excessively. Eventually, the clutch in the transmission could become overheated.
- When the clutch is overheated, the safe protection mode engages and the gear position indicator on the cluster blinks with a chime. In this situation, "Transmission temp. is high! Stop safely" warning message will appear on the LCD display, and driving may not be smooth.
- If this occurs, pull over to a safe location, stop the vehicle with the engine running, apply the brakes, shift the vehicle to P (Park), and allow the transmission to cool.
- If you ignore this warning, the driving condition may become worse. You may experience abrupt shifts, frequent shifts, or jerkiness. To return to the normal driving condition, stop the vehicle and apply the foot brake or shift into P (Park).
  Then allow the transmission to cool for a few minutes with the engine on before driving off.

- When possible, drive the vehicle smoothly.

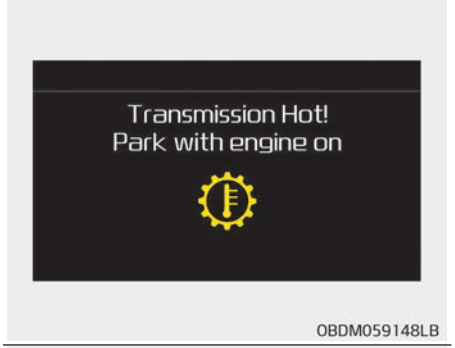

OBDM059148LB

OBDM059154L

OBDM059156L

Transmission overheated

- If the vehicle continues to be driven and the clutch temperatures reach the maximum temperature limit, the "Transmission Hot! Park with engine on" warning will be displayed. When this occurs, the clutch is disabled until the clutch cools to normal temperatures.
- The warning will display a time to wait for the transmission to cool.
- If this occurs, pull over to a safe location, stop the vehicle with the engine running, apply the brakes, shift the vehicle to P (Park), and allow the transmission to cool.
- When the message "Trans cooled. Resume driving." appears, you can continue to drive your vehicle.
- When possible, drive the vehicle smoothly.

If any of the warning messages in the LCD display continue to blink, for your safety, we recommend having the system checked by an authorized Kia dealer.

Transmission ranges

The indicator in the instrument cluster displays the shift lever position when the ignition switch is in the ON position.

P (Park)

Always come to a complete stop before shifting into P (Park).

To shift from P (Park), you must depress firmly on the brake pedal and make sure your foot is off the accelerator pedal.

If you have done all of the above and still cannot shift the lever out of P (Park), see "Shift-Lock Release" on page 6-22.

The shift lever must be in P (Park) before turning the engine off.

⚠ WARNING

- **Shifting into P (Park) while the vehicle is in motion may cause you to lose control of the vehicle.**
- **After the vehicle has stopped, always make sure the shift lever is in P (Park), apply the parking brake, and turn the engine off.**
- **When parking on an incline, chock the wheels to prevent the vehicle from rolling down.**
- **For safety, always engage the parking brake with the shift lever in the P (Park) position except for the case of emergency parking.**
- **Do not use the P (Park) position in place of the parking brake.**

R (Reverse)

Use this position to drive the vehicle backward.

⚠ CAUTION

Always come to a complete stop before shifting into or out of R (Reverse); you may damage the transmission if you shift into R (Reverse) while the vehicle is in motion.

N (Neutral)

The wheels and transmission are not engaged.

⚠ WARNING

Do not shift into gear unless your foot is firmly on the brake pedal. Shifting into gear when the engine is running at high speed can cause the vehicle to move very rapidly. You could lose control of the vehicle and hit people or objects.

⚠ WARNING

Do not drive with the shift lever in N (Neutral).
The engine brake will not work and lead to an accident.

- Parking in N (Neutral) gear

Follow below steps when parking and you want the vehicle to move when pushed.

1. After parking your vehicle, step on the brake pedal and move the shift lever to P with the ignition button in ON or while the engine is running.
2. If the parking brake is applied unlock the parking brake.
3. While pressing the brake pedal, turn the ignition button OFF.
   - For smart key equipped vehicles, the ignition switch can be moved to OFF only when the shift lever is in P.
4. Change the gear shift lever to N (Neutral) while pressing the brake pedal and pushing [SHIFT LOCK RELEASE] button or inserting, pressing down a tool (e.g. flathead screw-driver) into the [SHIFT LOCK RELEASE] access hole at the same time. Then, the vehicle will move when external force is applied.

⚠ CAUTION

- **With the exception of parking in neutral gear, always park the vehicle in P (Park) for safety and engage the parking brake.**
- **Before parking in N (Neutral) gear, first make sure the parking ground is level and flat. Do not park in N gear on any slopes or gradients.**
  If parked and left in N, the vehicle may move and cause serious damage and injury.

D (Drive)

This is the normal driving position. The transmission will automatically shift through a seven-gear sequence, providing the best fuel economy and power.
For extra power when passing another vehicle or driving uphill depress the accelerator pedal further until you feel the transmission downshift to a lower gear.
To stop the vehicle during driving, please press brake pedal fully to prevent unintended movement.

Manual mode

In manual mode, moving the shift lever backwards and forwards will allow you to select the desired range of gears for the current driving conditions.

+ (Up):	Push the lever forward once to shift up one gear.
- (Down):	Pull the lever backwards once to shift down one gear.

✻ NOTICE

- Only the six forward gears can be selected. To reverse or park the vehicle, move the shift lever to the R (Reverse) or P (Park) position as required.
- Downshifts are made automatically when the vehicle slows down. When the vehicle stops, 1st gear is automatically selected.
- When the engine rpm approaches the red zone the transmission will upshift automatically.
- If the driver presses the lever to + (Up) or - (Down) position, the transmission may not make the requested gear change if the next gear is outside of the allowable rpm range.

Paddle shifter (if equipped)

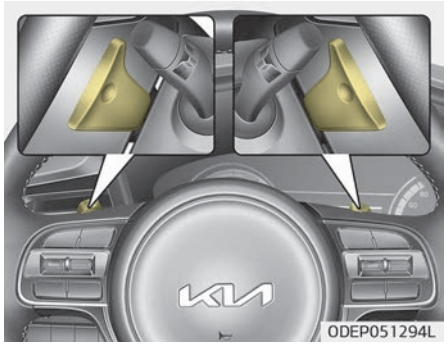

The paddle shift function is available when the shift lever is in the sport/manual mode.

With the shift lever in the manual mode

Pull the [+] or [-] paddle shifter once to shift up or down one gear.

✻ NOTICE

If you pull the [+] and [-] paddle shifters at the same time, you cannot shift the gear.

SPORT Mode / ECO Mode

When you drive after changing the gear shift lever to manual mode, the vehicle will automatically shift to SPORT mode. When you drive the vehicle after putting the gear shift lever to 'D', the vehicle will automatically shift to ECO mode. Each automatic change in shift will be displayed on the instrument cluster.

- ECO mode
  This driving mode increases fuel efficiency. The actual fuel mileage will depend on your driving habits and road conditions.
- SPORT mode
  This driving mode provides sporty driving experience. Be aware that fuel efficiency may decrease in this mode.

Shift lock system

For your safety, the Dual clutch transmission has a shift lock system which prevents shifting the transaxle from P (Park) into R (Reverse) unless the brake pedal is depressed.
To shift the transaxle from P (Park) into R (Reverse):

1. Depress and hold the brake pedal.
2. Start the engine or turn the ignition switch to the ON position.
3. Move the shift lever.

If the brake pedal is repeatedly depressed and released with the shift lever in the P (Park) position, a chattering noise & vibration near the shift lever may be heard. This is a normal condition.

⚠ WARNING

Always fully depress the brake pedal before and while shifting out of the P (Park) position into another position to avoid inadvertent motion of

(Continued)

(Continued)

the vehicle which could injure persons in or around the car.

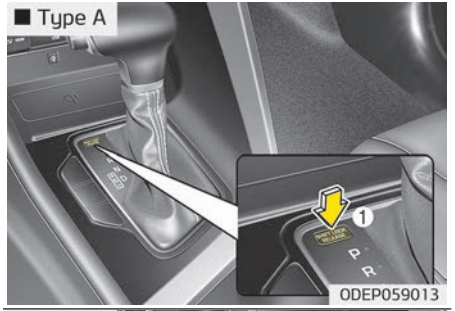

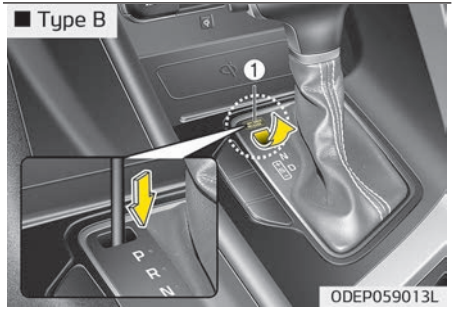

Shift-lock override

If the shift lever cannot be moved from the P (Park) into R (Reverse) position with the brake pedal depressed, continue depressing the brake, then do the following:

1. Place the ignition switch in the LOCK/OFF position.
2. Apply the parking brake.
3. Carefully remove the cap (1) covering the shift-lock release access hole.
4. Insert a tool (e.g. flathead screwdriver) into the access hole and press down on the tool.
5. Move the shift lever.
6. Remove the tool from the shift lock override access hole then install the cap.
7. Have the system inspected by a professional workshop. Kia recommends to visit an authorized Kia dealer/service partner.

Ignition key interlock system (if equipped)

The ignition key cannot be removed unless the shift lever is in the P (Park) position.

Good driving practices

- Never move the shift lever from P (Park) or N (Neutral) to any other position with the accelerator pedal depressed.
- Never move the shift lever into P (Park) when the vehicle is in motion.
- Be sure the car is completely stopped before you attempt to shift into R (Reverse) or D (Drive).
- Never take the car out of gear and coast down a hill. This may be extremely hazardous. Always leave the car in gear when moving.
- Do not "ride" the brakes. This can cause them to overheat and malfunction. Instead, when you are driving down a long hill, slow down and shift to a lower gear. When you do this, engine braking will help slow the car.
- Slow down before shifting to a lower gear. Otherwise, the lower gear may not be engaged.
- Always use the parking brake. Do not depend on placing the transaxle in P (Park) to keep the car from moving.

- Exercise extreme caution when driving on a slippery surface. Be especially careful when braking, accelerating or shifting gears. On a slippery surface, an abrupt change in vehicle speed can cause the drive wheels to lose traction and the vehicle to go out of control.
- Optimum vehicle performance and economy is obtained by smoothly depressing and releasing the accelerator pedal.

⚠ WARNING

- **When driving uphill or downhill, always shift to D (Drive) for driving forward or shift to R (Reverse) for driving backwards, and check the gear position indicated on the cluster before driving. Driving in the opposite direction of the selected gear can lead to a dangerous situation by shutting off the engine and affecting the braking performance.**

(Continued)

(Continued)

- **Always buckle-up! In a collision, an unbelted occupant is significantly more likely to be seriously injured or killed than a properly belted occupant.**
- **Avoid high speeds when cornering or turning.**
- **Do not make quick steering wheel movements, such as sharp lane changes or fast, sharp turns.**
- **The risk of rollover is greatly increased if you lose control of your vehicle at highway speeds.**
- **Loss of control often occurs if two or more wheels drop off the roadway and the driver oversteers to reenter the roadway.**
- **In the event your vehicle leaves the roadway, do not steer sharply. Instead, slow down before pulling back into the travel lanes.**
- **Never exceed posted speed limits.**

⚠ WARNING

If your vehicle becomes stuck in snow, mud, sand, etc., then you may attempt to rock the vehicle free by moving it forward and backward. Do not attempt this procedure if people or objects are anywhere near the vehicle. During the rocking operation the vehicle may suddenly move forward of backward as it becomes unstuck, causing injury or damage to nearby people or objects.

REGENERATIVE BRAKING SYSTEM

Regenerative Braking (Paddle Shifter)

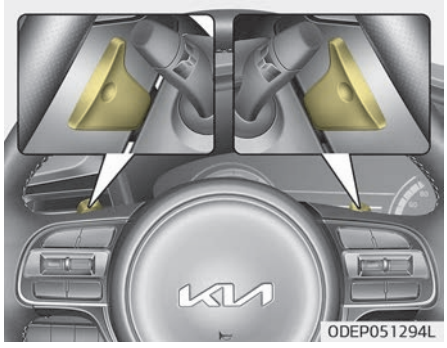

The paddle shifter is used to adjust the regenerative braking level from 0 to 3 during decelerating or braking.

- Left side [-] : Increases regenerative braking and deceleration.
- Right side [+] : Decreases regenerative braking and deceleration.

✻ NOTICE

- The control level will be started at 0 when the engine start. It will activate only in D (Drive) range.
- If you operate the shift lever (to P, R, N/Sport), Regen B mode will be cancelled and if you return to D (Drive) range, the Regen B mode will be returned to 0 level.
- Regen B mode will be cancelled when ABS, ESC operate.
- The speed decrement may different depends on the vehicle speed even in the same Regen B level. (The speed decrement in each level is bigger in the city driving than that of highway driving.)

✻ NOTICE

The vehicle does not completely stop by using paddle shifter lever. When the Regen B power reduced, the vehicle slowly moves about 10 km/h. In order to stop the vehicle, depress the brake pedal.

✻ NOTICE

The paddle shifter does not operate when:

- The [-] and [+] paddle shifters are pulled at the same time.
- The vehicle is decelerating by depressing the brake pedal.
- The Cruise Control system or Smart Cruise Control system is activated.

⚠ WARNING

Usage of the function may be limited according to the battery and motor's

(Continued)

(Continued)

condition. (over charge, high and low temperature) Check traffic and driving condition. If necessary, control the vehicle speed by yourself using brake pedal.

ODEP059298B

The selected regenerative braking level is displayed on the instrument cluster.

Drive mode	Paddle shifter lever operation	Paddle shift lever function
ECO	+	Reduction regenerative braking level
	–	Increase of regenerative braking level
SPORT	+	manual shift (+)
	–	manual shift (–)

❊ The paddle shifter function changed by selection of Drive mode.

Regeneration unavailable. Battery full

ODEP059295L

If SOC (State of High voltage battery Charge) is high, it is not possible to enable Regen B mode. Use the function again after normal driving.

Regeneration conditions not met

- If the motor and battery is in high/low temperature status or if there is a malfunction on battery and transmission, the warning message will be displayed.
- If the vehicle entering the Regen B mode during the activation of ABS/ Cruise Control/Smart Cruise Control, the warning message will be displayed.

Once the warning message is displayed, the usage of function will be temporarily limited. Use the function again after normal driving.

BRAKE SYSTEM

Power brakes

Your vehicle's brake system is power-assisted by the electric hydraulic pump. In the event the brakes lose power because of a brake control system malfunction, unstable power supply or some other reason, you can still stop your vehicle by applying greater force to the brake pedal than you normally would. The stopping distance, however will be longer. Please have the system checked as soon as possible.

If the brake pedal does not return to its normal position when released, there may be a malfunction in the brake system. In this case, have the system checked by a professional workshop. Kia recommends to visit an authorized Kia dealer/service partner.

⚠ WARNING

■ Brakes

(Continued)

(Continued)

- **Do not drive with your foot resting on the brake pedal. This will create abnormal high brake temperatures, excessive brake lining and pad wear, and increased stopping distances.**
- **When descending a long or steep hill, shift to a lower gear and avoid continuous application of the brakes. Continuous brake application will cause the brakes to overheat and could result in a temporary loss of braking performance.**

(Continued)

(Continued)

- **Wet brakes may impair the vehicle's ability to safely slow down; the vehicle may also pull to one side when the brakes are applied. Applying the brakes lightly will indicate whether they have been affected in this way.**
  Always test your brakes in this fashion after driving through deep water. To dry the brakes, apply them lightly while maintaining a safe forward speed until brake performance returns to normal.
- **Always, confirm the position of the brake and accelerator pedal before driving. If you don't check the position of the accelerator and brake pedal before driving, you may depress the accelerator instead of the brake pedal. It may cause a serious accident.**

✻ NOTICE

- Do not depress the brake pedal continuously without the "" indicator ON. The battery may be discharged.
- Some noise and vibration may occur during braking. This is normal.
- In below cases, some electric brake pump noise and motor vibration may occur temporarily. This is a normal operation.
  - When the pedal is pushed down very quickly
  - When the pedal is pushed down multiple times in short intervals
  - When the ABS function is activated during braking

Disc brakes wear indicator

When your brake pads are worn and new pads are required, you will hear a high-pitched warning sound from your front brakes or rear brakes (if equipped). You may hear this sound come and go or it may occur whenever you depress the brake pedal.
Please remember that some driving conditions or climates may cause a brake squeal when you first apply (or lightly apply) the brakes. This is normal and does not indicate a problem with your brakes.

⚠ CAUTION

- **To avoid costly brake repairs, do not continue to drive with worn brake pads.**
- **Always replace the front or rear brake pads as pairs.**

⚠ WARNING

■ Brake wear

(Continued)

(Continued)

This brake wear warning sound means your vehicle needs service. If you ignore this audible warning, you will eventually lose braking performance, which could lead to a serious accident.

Foot parking brake

Applying the parking brake

To engage the parking brake, first apply the foot brake and then depress the parking brake pedal down as far as possible.

⚠ CAUTION

- **Driving with the parking brake applied will cause excessive brake pad (or lining) and brake rotor wear.**
- **Do not operate the parking brake while the vehicle is moving except in an emergency situation. It could damage the vehicle system and make endanger driving safety.**

Releasing the parking brake

To release the parking brake, depress the parking brake pedal a second time while applying the foot brake. The pedal will automatically extend to the fully released position.

⚠ WARNING

- **Whenever leaving the vehicle or parking, always come to a complete stop and continue to depress the brake pedal. Move the shift lever into the P (Park) position, then apply the parking brake, and place the ENGINE START/STOP button in the OFF position.**
  Vehicles with the parking brake not fully engaged are at risk for moving inadvertently and causing injury to yourself or others.
- **Never allow anyone who is unfamiliar with the vehicle to touch the parking brake. If the parking brake is released unintentionally, serious injury may occur.**
- **All vehicles should always have the parking brake fully engaged when parking to avoid inadvertent movement of the vehicle which can injure occupants or pedestrians.**

Check the brake warning light by pressing ENGINE START/STOP button switch ON (do not start the engine). This light will be illuminated when the parking brake is applied with the ENGINE START/STOP button switch in the START or ON position.
Before driving, be sure the parking brake is fully released and the brake warning light is off.
If the brake warning light remains on after the parking brake is released while the engine is running, there may be a malfunction in the brake system. Immediate attention is necessary.

If at all possible, cease driving the vehicle immediately. If that is not possible, use extreme caution while operating the vehicle and only continue to drive the vehicle until you can reach a safe location or repair shop.

Electronic Parking Brake (EPB) (if equipped)

Applying the parking brake

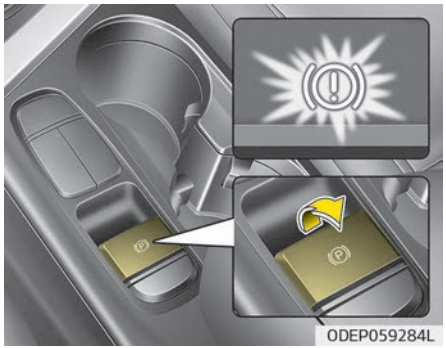

To apply the EPB (Electronic Parking Brake):

1. Depress the brake pedal.
2. Pull up the EPB switch.

Make sure the warning light comes on.

Also, the EPB is applied automatically if the Auto Hold button is on when the engine is turned off.

✻ NOTICE

On a steep incline or when pulling a trailer if the vehicle does not stand still, do as follows:

1. Apply the EPB.
2. Pull up the EPB switch for more than 3 seconds.

Releasing the Parking Brake

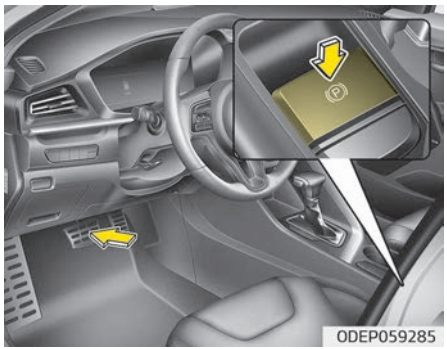

To release the EPB (Electronic Parking Brake), press the EPB switch in the following condition:

- Have the ENGINE START/STOP button in the ON position.
- Depress the brake pedal.

Make sure the brake warning light goes off.

To release EPB (Electronic Parking Brake) automatically:

- Shift lever in P (Park)
  With the engine running depress the brake pedal and shift out of P (Park) to R (Reverse) or D (Drive).
- Shift lever in N (Neutral)
  With the engine running depress the brake pedal and shift out of N (Neutral) to R (Reverse) or D (Drive).
- Depress the accelerator pedal slowly when the following conditions are satisfied:
  1. Start the engine.
  2. Fasten the driver's seat belt.
  3. Close the driver's door, engine hood and trunk.
  4. The shift lever is in R (Rear), D (Drive) or manual mode.

Make sure the brake warning light goes off.

✻ NOTICE

- For your safety, you can engage the EPB even though the engine stop/start button is in the OFF position, but you cannot release it.
- For your safety, depress the brake pedal and release the parking brake manually with the EPB switch when you drive downhill or when backing up the vehicle.

⚠ CAUTION

- **If the parking brake warning light is still on even though the EPB has been released, have the system checked by a professional workshop. Kia recommends to visit an authorized Kia dealer/service partner.**

(Continued)

(Continued)

- **Do not drive your vehicle with the EPB applied. It may cause excessive brake pad and brake rotor wear.**

EPB (Electronic Parking Brake) may be automatically applied when:

- The EPB is overheated
- Requested by other systems
- The hybrid system is turned off with the EPB applied

✻ NOTICE

- If Auto Hold is operating (Green light), EPB is applied automatically when the hybrid system is turned off.

(Continued)

(Continued)

- If Auto Hold is in ready position (White light), EPB is applied automatically after 1 second from the hybrid system off timing. In this case, if the EPB switch is pressed within 1 second, the EPB will not be applied.

System warning

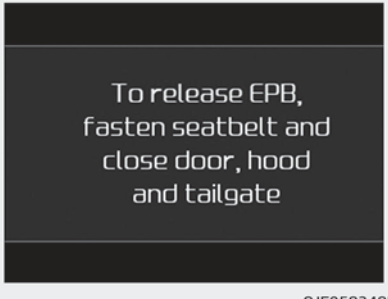

OJF058248LB

- If you try to drive off depressing the accelerator pedal with the EPB applied, but doesn't release automatically, a warning will sound and a message will appear.
- If the driver's seat belt is not fastened and the engine hood or trunk (tailgate) is opened, a warning will sound and a message will appear.
- If there is a problem with the vehicle, a warning may sound and a message may appear.

If the above situation occurs, depress the brake pedal and release EPB by pressing the EPB switch.

⚠ WARNING

- **To prevent unintentional movement when stopped and leaving the vehicle, do not use the shift lever in place of the parking brake. Set the parking brake and make sure the shift lever is securely positioned in P (Park).**

(Continued)

(Continued)

- **Never allow anyone who is unfamiliar with the vehicle to touch the parking brake. If the parking brake is released unintentionally, serious injury may occur.**
- **All vehicles should always have the parking brake fully engaged when parking to avoid inadvertent movement of the car which can injure occupants or pedestrians.**

⚠ CAUTION

- **A click or electric brake motor whine sound may be heard while operating or releasing the EPB, but these conditions are normal and indicate that the EPB is functioning properly.**
- **When leaving your keys with a parking lot attendant or valet, make sure to inform him/her how to operate the EPB.**

(Continued)

(Continued)

- **The EPB may malfunction if you drive with the EPB applied.**
- **When you automatically release EPB by depressing the accelerator pedal, depress it slowly.**

System warning

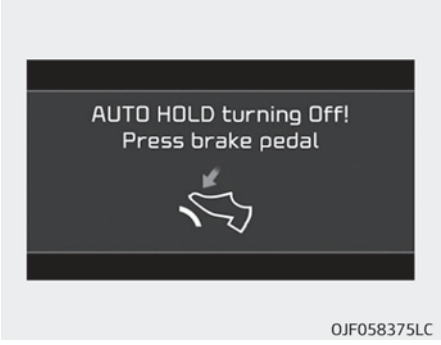

When the conversion from Auto Hold to EPB is not working properly a warning will sound and a message will appear.

⚠ CAUTION

Depress the brake pedal when the above message appears for the Auto Hold and EPB may not activate.

System warning

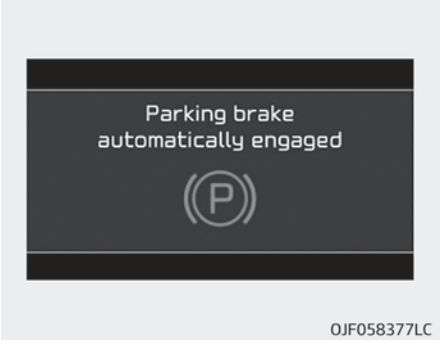

If the EPB is applied while Auto Hold is activated because of ESC (Electronic Stability Control) signal, a warning will sound and a message will appear.

EPB malfunction indicator (if equipped)

This warning light illuminates if the ENGINE START/STOP button is changed to the ON position and goes off in approximately 3 seconds if the system is operation normally.
If the EPB malfunction indicator remains on, comes on while driving, or does not come on when the ignition switch or the ENGINE START/STOP button is changed to the ON position, this indicates that the EPB may have malfunctioned.

If this occurs, have the system checked by a professional workshop. Kia recommends to visit an authorized Kia dealer/service partner.
The EPB malfunction indicator may illuminate when the ESC indicator comes on to indicate that the ESC is not working properly, but it does not indicate a malfunction of the EPB.

⚠ CAUTION

- **The EPB warning light may illuminate if the EPB switch operates abnormally. Shut the engine off and turn it on again after a few minutes. The warning light will go off and the EPB switch will operate normally. However, if the EPB warning light is still on, have the system checked by a professional workshop.**
  Kia recommends to visit an authorized Kia dealer/service partner.

(Continued)

(Continued)

- **If the parking brake warning light does not illuminate or blinks even though the EPB switch was pulled up, the EPB is not applied.**
- **If the parking brake warning light blinks when the EPB warning light is on, press the switch, then pull it up. Once more press it back to its original position and pull it back up. If the EPB warning does not go off, have the system checked by a professional workshop.**
  Kia recommends to visit an authorized Kia dealer/service partner.

Emergency braking

If there is a problem with the brake pedal while driving, emergency braking is possible by pulling up and holding the EPB switch. Braking is possible only while you are holding the EPB switch.

⚠ WARNING

Do not operate the parking brake while the vehicle is moving except in an emergency situation.

✻ NOTICE

During emergency braking by the EPB, the parking brake warning light will illuminate to indicate that the system is operating.

⚠ CAUTION

If you continuously notice a noise or burning smell when the EPB is used for emergency braking, have the system checked by a professional workshop.
Kia recommends to visit an authorized Kia dealer/service partner.

When the EPB (Electronic Parking Brake) does not release

If the EPB does not release normally, load the vehicle on a flatbed tow truck and have the system checked by a professional workshop. Kia recommends to visit an authorized Kia dealer/service partner.

AUTO HOLD (if equipped)

The Auto Hold maintains the vehicle in a standstill even though the brake pedal is not depressed after the driver brings the vehicle to a complete stop by depressing the brake pedal.

Set up

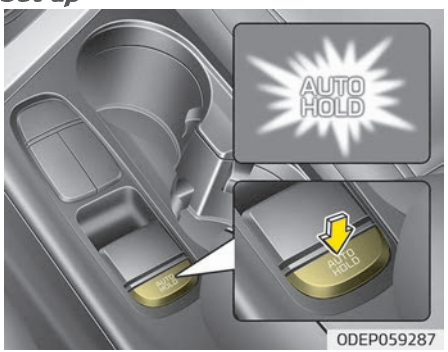

ODEP059287

1. With the driver's door, engine hood closed, fasten the driver's seat belt or depress the brake pedal and then press the Auto Hold button. The white AUTO HOLD indicator will come on and the system will be in the standby position.

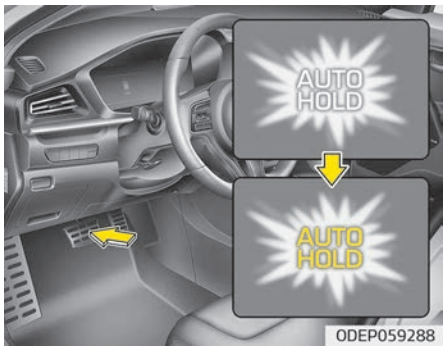

ODEP059288

2. When you stop the vehicle completely by depressing the brake pedal, the AUTO HOLD indicator changes from white to green.
3. The vehicle will remain stationary even if you release the brake pedal.
4. If EPB is applied, Auto Hold will be released.

Leaving

If you press the accelerator pedal with the shift lever in D (Drive) or manual mode, the Auto Hold will be released automatically and the vehicle will start to move. The indicator changes from green to white.

⚠ WARNING

When driving off from Auto Hold by depressing the accelerator pedal, always check the surrounding area near your vehicle.
Slowly depress the accelerator pedal for a smooth launch.

Cancel

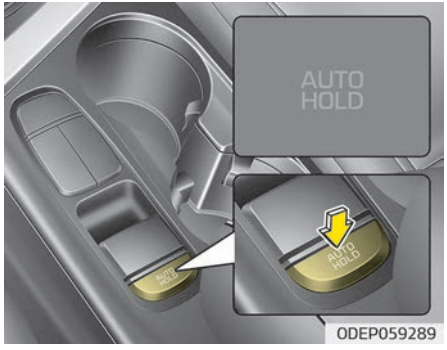

ODEP059289

To cancel the Auto Hold operation, press the Auto Hold switch. The AUTO HOLD indicator will go out.
To cancel the Auto Hold operation when the vehicle is at a standstill, press the Auto Hold switch while depressing the brake pedal.

✻ NOTICE

- The Auto Hold does not operate when:
  - The driver's door is opened

(Continued)

(Continued)

  - The engine hood is opened
  - The shift lever is in P (Park) or R (Reverse)
  - The EPB is applied
- For your safety, the Auto Hold automatically switches to EPB in such cases:
  - The driver's door is opened
  - The engine hood is opened
  - The vehicle is in a standstill for more than 10 minutes
  - The vehicle is standing on a steep slope

(Continued)

(Continued)

  - The vehicle moved several times
    In these cases, the brake warning light comes on, the AUTO HOLD indicator changes from green to white, and a warning sounds and a message will appear to inform you that EPB has been automatically engaged. Before driving off again, press foot brake pedal, check the surrounding area near your vehicle and release parking brake manually with the EPB switch.
- If the AUTO HOLD indicator lights up yellow, the Auto Hold is not working properly. In this case, have your vehicle inspected by a professional workshop. Kia recommends to contact an authorized Kia dealer/service partner.

(Continued)

(Continued)

- While operating Auto Hold, you may hear mechanical noise. However, it is normal operation noise.

⚠ WARNING

- **Press the accelerator pedal slowly when you start the vehicle.**
- **For your safety, cancel the Auto Hold when you drive downhill or back up the vehicle or park the vehicle.**

⚠ CAUTION

If there is a malfunction with the driver's door, engine hood open detection system, the Auto Hold may not work properly.
In this case, have your vehicle inspected by a professional workshop. Kia recommends to contact an authorized Kia dealer/service partner.

Warning messages

Parking brake automatically engaged

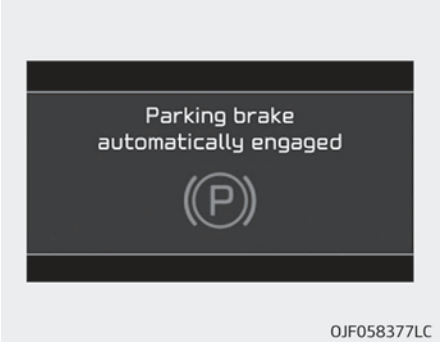

When the EPB is applied from Auto Hold, a warning will sound and a message will appear.

AUTO HOLD turning Off! Press brake pedal

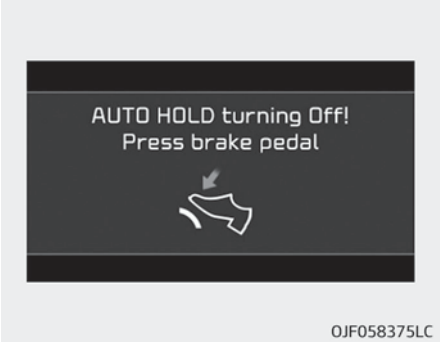

When the conversion from Auto Hold to EPB is not working properly a warning will sound and a message will appear.

✻ NOTICE

When this message is displayed, the Auto Hold and EPB may not operate. For your safety, depress the brake pedal.

Press brake pedal to deactivate AUTO HOLD

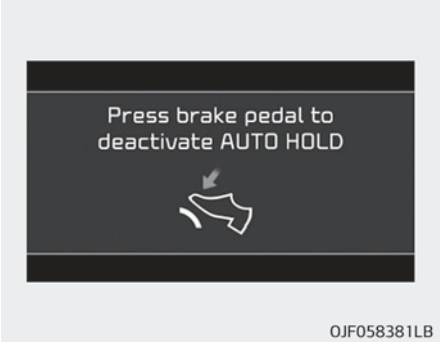

If you did not apply the brake pedal when you release the Auto Hold by pressing the [AUTO HOLD] switch, a warning will sound and a message will appear.

AUTO HOLD conditions not met. Close door and hood

When you press the [AUTO HOLD] switch, if the driver's door, engine hood are not closed, a warning will sound and a message will appear on the LCD display. At this moment, press the [AUTO HOLD] button after closing the driver's door and hood.

Anti-lock brake system (ABS)

⚠ WARNING

ABS (or ESC) will not prevent accidents due to improper or dangerous driving maneuvers. Even though vehicle control is improved during emergency braking, always maintain a safe distance between you and objects ahead. Vehicle speeds should always be reduced during extreme road conditions.
The braking distance for vehicle equipped with an anti-lock braking system (or Electronic Stability Control) may be longer than for those without it in the following road conditions.
During these conditions the vehicle should be driven at reduced speeds:

- **Rough, gravel or snow-covered roads.**
- **With tire chains installed.**
- **On roads where the road surface is pitted or has different surface height.**

(Continued)

(Continued)

The safety features of an ABS (or ESC) equipped vehicle should not be tested by high speed driving or cornering. This could endanger the safety of yourself or others.

The ABS continuously senses the speed of the wheels. If the wheels are going to lock, the ABS system repeatedly modulates the hydraulic brake pressure to the wheels.
When you apply your brakes under conditions which may lock the wheels, you may hear a "tik-tik" sound from the brakes, or feel a corresponding sensation in the brake pedal. This is normal and it means your ABS is active.
In order to obtain the maximum benefit from your ABS in an emergency situation, do not attempt to modulate your brake pressure and do not try to pump your brakes. Press your brake pedal as hard as possible or as hard as the situation warrants and allow the ABS to control the force being delivered to the brakes.

✻ NOTICE

A click sound may be heard in the engine compartment when the vehicle begins to move after the engine is started. These conditions are normal and indicate that the anti-lock brake system is functioning properly.

- Even with the anti-lock brake system, your vehicle still requires sufficient stopping distance. Always maintain a safe distance from the vehicle in front of you.
- Always slow down when cornering. The anti-lock brake system cannot prevent accidents resulting from excessive speeds.
- On loose or uneven road surfaces, operation of the anti-lock brake system may result in a longer stopping distance than for vehicles equipped with a conventional brake system.

W-78

⚠ CAUTION

- **If the ABS warning light is on and stays on, you may have a problem with the ABS. In this case, however, your regular brakes will work normally.**

(Continued)

(Continued)

- **The ABS warning light will stay on for approximately 3 seconds after the ignition switch is ON. During that time, the ABS will go through self diagnosis and the light will go off if everything is normal. If the light stays on, you may have a problem with your ABS. In this case, have the system checked by a professional workshop. Kia recommends to visit an authorized Kia dealer/service partner.**

⚠ CAUTION

- **When you drive on a road having poor traction, such as an icy road, and operate your brakes continuously, the ABS will be active continuously and the ABS warning light may illuminate. Pull your vehicle over to a safe place and stop the engine.**

(Continued)

(Continued)

- **Restart the engine. If the ABS warning light is off, then your ABS system is normal. Otherwise, you may have a problem with the ABS. In this case, have the system checked by a professional workshop. Kia recommends to visit an authorized Kia dealer/service partner.**

✻ NOTICE

When you jump start your vehicle because of a drained battery, the engine may not run as smoothly and the ABS warning light may turn on at the same time. This happens because of the low battery voltage. It does not mean your ABS is malfunctioning.

- Do not pump your brakes!
- Have the battery recharged before driving the vehicle.

Electronic stability control (ESC) (if equipped)

The Electronic Stability Control (ESC) system is designed to stabilize the vehicle during cornering maneuvers. ESC checks where you are steering and where the vehicle is actually going. ESC applies the brakes at individual wheels and intervenes with engine management system to stabilize the vehicle.

⚠ WARNING

Never drive too fast for the road conditions or too quickly when cornering. Electronic stability control (ESC) will not prevent accidents. Excessive speed in turns, abrupt maneuvers and hydroplaning on wet surfaces can still result in serious accidents. Only a safe and attentive driver can prevent accidents by avoiding maneuvers that cause the vehicle to lose traction. Even with ESC installed, always follow all the normal precautions for driving - including driving at safe speeds for the conditions.

The Electronic stability control (ESC) system is an electronic system designed to help the driver maintain vehicle control under adverse conditions. It is not a substitute for safe driving practices. Factors including speed, road conditions and driver steering input can all affect whether ESC will be effective in preventing a loss of control. It is still your responsibility to drive and corner at reasonable speeds and to leave a sufficient margin of safety.

When you apply your brakes under conditions which may lock the wheels, you may hear a "tik-tik" sound from the brakes, or feel a corresponding sensation in the brake pedal. This is normal and it means your ESC is active.

✻ NOTICE

A click sound may be heard in the engine compartment when the vehicle begins to move after the engine is started. These conditions are normal and indicate that the Electronic stability control (ESC) System is functioning properly.

ESC operation

ESC ON condition

When the ignition is turned ON, ESC and ESC OFF indicator lights illuminate for approximately 3 seconds, then ESC is turned on.

- Press the ESC OFF button for at least half a second after turning the ignition ON to turn ESC off. (ESC OFF indicator will illuminate). To turn the ESC on, press the ESC OFF button (ESC OFF indicator light will go off).
- When starting the engine, you may hear a slight ticking sound. This is the ESC performing an automatic system self-check and does not indicate a problem.

When operating

When the ESC is in operation, ESC indicator light blinks.

- When the Electronic Stability Control is operating properly, you can feel a slight pulsation in the vehicle. This is only the effect of brake control and indicates nothing unusual.

- When moving out of the mud or slippery road, the engine rpm (revolution per minute) may not increase even if you press the accelerator pedal deeply. This is to maintain the stability and traction of the vehicle and does not indicate a problem.

ESC operation off

ESC OFF state

This car has 2 kinds of ESC off states.
If the engine stops when ESC is off, ESC remains off. Upon restarting the engine, the ESC will automatically turn on again.

"Traction Control disabled"

- ESC off state 1
  To cancel ESC operation, press the ESC OFF button (ESC OFF) shortly (ESC OFF indicator light (ESC OFF) illuminates) and an above LCD message will come up. At this state, the engine control function does not operate. It means the traction control function does not operate. Brake control function only operates.

"Traction & Stability Control disabled"

- ESC off state 2
  To cancel ESC operation, press the ESC OFF button (ESC OFF) for more than 3 seconds. ESC OFF indicator light (ESC OFF) illuminates and an above LCD message will come up and ESC OFF warning chime will sound. At this state, the engine control function and brake control function do not operate. It means the car stability control function does not operate any more.

Indicator light

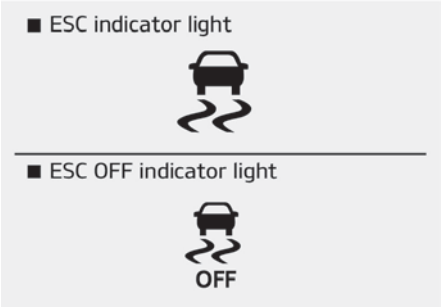

When ignition switch is turned to ON, the indicator light illuminates, then goes off if the ESC system is operating normally.
The ESC indicator light blinks whenever ESC is operating or illuminates when ESC fails to operate.
ESC OFF indicator light comes on when the ESC is turned off with the button.

⚠ CAUTION

Driving with varying tire or wheel sizes may cause the ESC system to malfunction. When replacing tires,

(Continued)

(Continued)

make sure they are the same size as your original tires.

⚠ WARNING

The Electronic Stability Control system is only a driving aid; use precautions for safe driving by slowing down on curved, snowy, or icy roads. Drive slowly and don't attempt to accelerate whenever the ESC indicator light is blinking, or when the road surface is slippery.

ESC OFF usage

When driving

- ESC should be turned on for daily driving whenever possible.
- To turn ESC off while driving, press the ESC OFF button while driving on a flat road surface.

⚠ WARNING

Never press the ESC OFF button while ESC is operating (ESC indicator light blinks).
If ESC is turned off while ESC is operating, the vehicle may slip out of control.

✻ NOTICE

- When operating the vehicle on a dynamometer, ensure that the ESC is turned off by pressing the ESC OFF button for more than 3 seconds (ESC OFF light illuminated). If the ESC is left on, it may prevent the vehicle speed from increasing, and result in false diagnosis.
- Turning the ESC off does not affect ABS or brake system operation.

Vehicle stability management (VSM) (if equipped)

This system provides further enhancements to vehicle stability and steering responses when a vehicle is driving on a slippery road or a vehicle detected changes in coefficient of friction between right wheels and left wheels when braking.

VSM operation

When the VSM is operating:

- ESC (Electronic Stability Control) ( ) light will blink.
- The steering wheel may be controlled.

When the vehicle stability management is operating properly, you can feel a slight pulsation in the vehicle. This is only the effect of brake control and indicates nothing unusual.

The VSM does not operate when:

- Driving on bank road such as gradient or incline
- Driving rearward
- ESC OFF indicator light ( ) remains on the instrument cluster

- EPS (Electronic Power Steering) indicator light remains on the instrument cluster

VSM operation off

If you press the ESC OFF button to turn off the ESC, the VSM will also cancel and the ESC OFF indicator light ( ) illuminates.
To turn on the VSM, press the button again. The ESC OFF indicator light goes out.

Malfunction indicator

The VSM can be deactivated even if you don't cancel the VSM operation by pressing the ESC OFF button. It indicates that a malfunction has been detected somewhere in the EPS (Electronic Power Steering) system or VSM system. If the ESC indicator light ( ) or EPS warning light remains on, have the system checked by a professional workshop. Kia recommends to visit an authorized Kia dealer/service partner.

NOTICE

- The VSM is designed to function above approximately 20 km/h (12 mph) when a vehicle is braking on a split-mu road. The split-mu road is made of surfaces which have different friction forces.

WARNING

- **The Vehicle Stability Management system is not a substitute for safe driving practices but a supplementary function only. It is the responsibility of the driver to always check the speed and the distance to the vehicle ahead. Always hold the steering wheel firmly while driving.**

(Continued)

(Continued)

- **Your vehicle is designed to activate according to the driver's intention, even with the VSM installed. Always follow all the normal precautions for driving at safe speeds for the conditions – including driving in inclement weather and on a slippery road.**
- **Driving with varying tire or wheel sizes may cause the VSM system to malfunction. When replacing tires, make sure they are the same size as your original tires.**

Hill-start assist control (HAC)

A vehicle has the tendency to slip back on a steep hill when it starts to go after stopping. The Hill-start Assist Control (HAC) prevents the vehicle from slipping back by operating the brakes automatically for about 1~2 seconds. The brakes are released when the accelerator pedal is depressed or after about 1~2 seconds.

⚠ WARNING

The HAC is activated only for about 1~2 seconds, so when the vehicle is starting off always depress the accelerator pedal.

✻ NOTICE

- The HAC does not operate when the transaxle shift lever is in the P (Park) or N (Neutral) position.
- The HAC activates even though the ESC is off but it does not activate when the ESC has malfunctioned.

Emergency stop signal (ESS) (if equipped)

The Emergency Stop Signal system alerts the driver behind by blinking the stop light when the vehicle is braked rapidly and severely.
The system is activated when:

- The vehicle suddenly stops (vehicle speed is over 55 km/h and the vehicle deceleration at greater than 7 m/s^2)
- The ABS is activating

When the vehicle speed is under 40 km/h and the ABS deactivates or the sudden stop situation is over, the stop light blinking will stop. Instead, the hazard warning flasher will turn on automatically.
The hazard warning flasher will turn off when vehicle speed is over 10 km/h after the vehicle has stopped. Also, it will turn off when the vehicle is driven at low speed for some time. You can turn it off manually by pushing the hazard warning flasher switch.

⚠ CAUTION

The Emergency Stop Signal (ESS) system will not work if the hazard warning flasher is already on.

Good braking practices

⚠ WARNING

- **Whenever you leave or park your vehicle, always set the parking brake as far as possible and fully engage the vehicle's transaxle into the P (Park) position. If the parking brake is not fully engaged, the vehicle may move inadvertently and injure yourself and others.**
- **All vehicles should always have the parking brake fully engaged when parking to avoid inadvertent movement of the vehicle which can injure occupants or pedestrians.**

- Check to be sure the parking brake is not engaged and that the parking brake indicator light is out before driving away.

- Driving through water may get the brakes wet. They can also get wet when the vehicle is washed. Wet brakes can be dangerous! Your vehicle will not stop as quickly if the brakes are wet. Wet brakes may cause the vehicle to pull to one side.
  To dry the brakes, apply the brakes lightly until the braking action returns to normal, taking care to keep the vehicle under control at all times. If the braking action does not return to normal, stop as soon as it is safe to do so and have your vehicle inspected by a professional workshop. Kia recommends to call an authorized Kia dealer/service partner.
- Do not coast down hills with the vehicle out of gear. This is extremely hazardous. Keep the vehicle in gear at all times, use the brakes to slow down, then shift to a lower gear so that engine braking will help you maintain a safe speed.
- Do not "ride" the brake pedal. Resting your foot on the brake pedal while driving can be dangerous because it can result in the brakes overheating and losing their effectiveness. It also increases the wear of the brake components.
- If a tire goes flat while you are driving, apply the brakes gently and keep the vehicle pointed straight ahead while you slow down. When you are moving slowly enough for it to be safe to do so, pull off the road and stop in a safe place.
- If your vehicle is equipped with an Dual clutch transmission, do not let your vehicle creep forward. To avoid creeping forward, keep your foot firmly on the brake pedal when the vehicle is stopped.
- Be cautious when parking on a hill. Firmly engage the parking brake and place the shift lever in P (dual clutch transmission). If your vehicle is facing downhill, turn the front wheels into the curb to help keep the vehicle from rolling.
  If your vehicle is facing uphill, turn the front wheels away from the curb to help keep the vehicle from rolling. If there is no curb or if it is required by other conditions to keep the vehicle from rolling, block the wheels.
- Under some conditions your parking brake can freeze in the engaged position. This is most likely to happen when there is an accumulation of snow or ice around or near the rear brakes or if the brakes are wet. If there is a risk that the parking brake may freeze, apply it only temporarily while you put the shift lever in P (Dual clutch transmission) and block the rear wheels so the vehicle cannot roll. Then release the parking brake.
- Do not hold the vehicle on the upgrade with the accelerator pedal. This can cause the transaxle to overheat. Always use the brake pedal or parking brake.

FORWARD COLLISION-AVOIDANCE ASSIST (FCA) (SENSOR FUSION)

Forward Collision-Avoidance Assist is to reduce or to avoid accident risk. It recognizes the distance from vehicle ahead, pedestrian or cyclist through the sensors (i.e. front view camera and front radar), and, if necessary, warns the driver of accident risk with the warning message or the warning alarms and apply emergency braking.

❈ FCA stands for Forward Collision-Avoidance Assist.

❈ Sensor fusion (front view camera + front radar) Forward Collision-Avoidance Assist operates for the vehicle ahead, the pedestrian or the cyclist in front.

⚠ WARNING

Take the following precautions when using Forward Collision-Avoidance Assist:

(Continued)

(Continued)

- **This function is only a supplemental function and it is not intended to, nor does it replace the need for extreme care and attention of the driver. The sensing range and objects detectable by the sensors are limited. Pay attention to the road conditions at all times.**
- **Never drive too fast in accordance with the road conditions or while cornering.**
- **Always drive cautiously to prevent unexpected and sudden situations from occurring. Forward Collision-Avoidance Assist does not stop the vehicle completely and does not avoid collisions.**

Forward Collision-Avoidance Assist setting and activation

Forward Collision-Avoidance Assist setting

The driver can activate Forward Collision-Avoidance Assist by placing the START/STOP BUTTON to the ON position and by selecting:

"User Settings ➡ Driver assistance ➡ Forward safety"

- If you select "Active Assist", Forward Collision-Avoidance Assist activates. Forward Collision-Avoidance Assist produces warning messages and warning alarms in accordance with the collision risk levels. Also, it controls the brakes in accordance with the collision risk levels.
- If you select "Warning Only", Forward Collision-Avoidance Assist activates and produces only warning alarms in accordance with the collision risk levels. You should control the brake directly because Forward Collision-Avoidance Assist do not control the brake.
- If you select "Off", Forward Collision-Avoidance Assist deactivates,

The warning light illuminates on the LCD display, when you cancel Forward Collision-Avoidance Assist.

The driver can monitor Forward Collision-Avoidance Assist ON/OFF status on the LCD display. Also, the warning light illuminates when the ESC (Electronic Stability Control) is turned off. When the warning light remains ON with Forward Collision-Avoidance Assist activated, have the function checked by a professional workshop. Kia recommends to visit an authorized Kia dealer/service partner.

Warning Timing

The driver can select the initial warning activation time on the LCD display.
Go to the "User Settings ➡ Driver assistance ➡ Warning timing ➡ Normal/Later".
The options for the initial Forward Collision Warning includes the following:

- Normal:
  When this condition is selected, the initial Forward Collision Warning is activated normally. This setting allows for a nominal amount of distance between the vehicle ahead before the initial warning occurs.
- Later:
  When this condition is selected, the initial Forward Collision Warning is activated later than normal. This setting reduces the amount of distance between the vehicle ahead, the pedestrian or the cyclist before the initial warning occurs.
  Select 'Later' when traffic is light and when driving speed is slow.
  If the vehicle in front puts on a burst of speed, the driver can notice the warning alarm is early even though the later option is selected.

✻ NOTICE

If you change the warning timing, the warning timing of other functions may change. Always be aware of warning timing before changing the warning timing.

Prerequisite for activation

Forward Collision-Avoidance Assist gets ready to be activated, when the Active Assist or Warning Only under Forward Safety is selected on the LCD display, and when the following prerequisites are satisfied.

- The ESC is activated.
- The driving speed is over 8 km/h (5 mph) (However, Forward Collision-Avoidance Assist is activated within certain driving speed.)
- When recognizing the vehicle or the pedestrian or the cyclist in front. (However, Forward Collision-Avoidance Assist does not activate according to conditions in front and vehicle function, but it notices only certain warnings.)
- Forward Collision-Avoidance Assist does not operate properly or it only produces a warning alarms in accordance with the driving or vehicle condition.
- If the warning only under Forward Safety is selected, Forward Collision-Avoidance Assist produces only warning alarms in accordance with the collision risk levels.

✻ NOTICE

Forward Collision-Avoidance Assist may not operate properly according

(Continued)

(Continued)

to the frontal situation, the direction of pedestrian or cyclist and speed.

⚠ WARNING

- **Forward Collision-Avoidance Assist automatically activates upon placing the ignition switch to the ON position. The driver can deactivate Forward Collision-Avoidance Assist system by canceling the function setting on the LCD display.**
- **Forward Collision-Avoidance Assist automatically deactivates upon canceling the ESC. When the ESC is canceled, Forward Collision-Avoidance Assist cannot be activated on the LCD display.**
  Forward Collision-Avoidance Assist warning light will illuminate, but it does not indicate a malfunction of the function.

(Continued)

(Continued)

- **Set or cancel Forward Collision-Avoidance Assist with controlling switches on steering wheel after stopping the vehicle in the safe place for your safety.**

Forward Collision-Avoidance Assist warning message and function control

Forward Collision-Avoidance Assist produces warning messages and warning alarms in accordance with the collision risk levels of followings like vehicle's sudden braking in front or lack of vehicle to vehicle distance or collision to pedestrians or cyclist. Also, it controls the brakes in accordance with the collision risk levels.
The driver can select the initial warning activation time in the User Settings in the LCD display. The options for the initial Forward Collision Warning include Normal or Late initial warning time.

Collision warning (1st warning)

- The warning message appears on the LCD display with the warning alarms.

- The Vehicle may slow down slightly
  - It will operate if the vehicle speed is greater than 8 km/h (5 mph) and less than or equal to 180 km/h (110 mph) on a forward vehicle. (Depending on the condition of the vehicle ahead and the environment surrounding it, the possible maximum operating speed may be reduced.)

- For pedestrian and cyclists, the vehicle speed is greater than or equal to 8 km/h (5 mph) and less than 180 km/h (110 mph). (Depending on the condition of pedestrian and cyclist and the surrounding environment the possible maximum operating speed may be reduced.)

- Forward Collision-Avoidance Assist controls the brakes within certain limit to release shock from the collision.
  - If you select "Warning only", the Forward Collision-Avoidance Assist activates and produces only warning alarms in accordance with the collision risk levels. You should control the brake directly because the Forward Collision-Avoidance Assist do not control the brake.

Emergency Braking (2nd warning)

- The warning message appears on the LCD display with the warning alarms.

- The brake control is maximized just before a collision, reducing impact when it strikes a forward vehicle.
  - It will operate if the vehicle speed is greater than 8 km/h (5 mph) and less than or equal to 65 km/h (40 mph) on a forward vehicle. (Depending on the condition of the vehicle ahead and the environment surrounding it, the possible maximum operating speed may be reduced.)
  - For pedestrian and cyclist, the vehicle speed is greater than or equal to 8 km/h (5 mph) and less than 65 km/h (40 mph). (Depending on the condition of pedestrian and cyclist and the surrounding environment the possible maximum operating speed may be reduced.)

- Forward Collision-Avoidance Assist controls the brakes within certain limit to release shock from the collision.
  Forward Collision-Avoidance Assist controls the maximum brakes just before the collision.
  - If you select "Warning only", Forward Collision-Avoidance Assist activates and produces only warning alarms in accordance with the collision risk levels. You should control the brake directly because Forward Collision-Avoidance Assist do not control the brake.

Brake operation

- In an urgent situation, the braking system enters into the ready status for prompt reaction to assist the driver in depressing the brake pedal.

- Forward Collision-Avoidance Assist provides additional braking power for optimum braking performance, when the driver depresses the brake pedal.
- The braking control is automatically deactivated, when the driver sharply depresses the brake or accelerator pedal, or when the driver abruptly operates the steering wheel.
- The braking control is automatically canceled, when risk factors disappear.

⚠ CAUTION

The driver should always pay great caution to vehicle operation, even though there is no warning message or warning alarm.

⚠ WARNING

Forward Collision-Avoidance Assist cannot avoid all collisions. Forward Collision-Avoidance Assist might not completely stop the vehicle before collision, due to ambient, weather and road conditions. The driver has

(Continued)

(Continued)

the responsibility to drive safely and control the vehicle.

⚠ WARNING

Forward Collision-Avoidance Assist operates in accordance with the risk levels, such as the distance from the vehicle/passer- by in front, the speed of the vehicle/passer-by in front, and the driver's vehicle operation.
For the function to activate, do not attempt risky driving.

Detecting sensors (Front view camera + Front radar)

The sensors are detecting the distance to vehicles ahead, pedestrian or cyclist. In bad weather conditions such as heavy rain, heavy snow, and fog, or when sensor is covered by foreign material, dust, etc., the sensors will be degraded and the function will be temporarily disabled. Always keep the sensor clean.

✻ NOTICE

- Do not install any accessories, such as license plate molding or sticker, on the sensor area. Nor arbitrarily replace the bumper. Those may adversely affect the sensing performance.
- Always keep the sensors/ bumper area clean.
- Use only soft clothes to wash the vehicle. Also, do not spray highly-pressurized water on the sensor installed on the bumper.

(Continued)

(Continued)

- Be careful not to apply unnecessary force on the frontal sensor area. When the sensor moves out of the correct position due to external force, the function may not normally operate even without the warning light or message. In this case, have the vehicle inspected by a professional workshop. Kia recommends to visit an authorized Kia dealer/service partner.
- Use only the genuine Kia sensor cover. Do not arbitrarily apply paint on the sensor cover.
- Do not tint the window or install stickers, accessories around the inside mirror where the camera is installed.
- Make sure the frontal camera installation point does not get wet.

(Continued)

(Continued)

- Do not impact or arbitrarily remove any front view camera and front radar components.
- Do not place reflective objects (white paper or mirror etc.) on the crash pad.
  The function may activate unnecessarily due to reflect of the sunlight.
- Excessive audio volume may disturb the sound of the function warning alarm.
- For more cautions for the front view camera sensor, refer to "Lane Keeping Assist (LKA)" on page 6-62 in this chapter.

Warning message and warning light

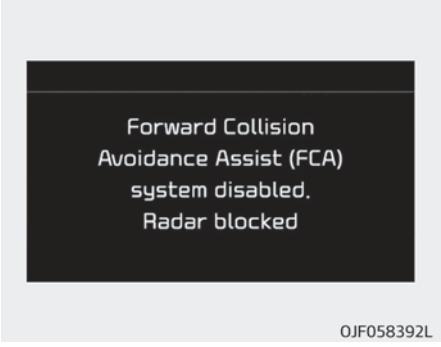

When the sensor cover is blocked with dirt, snow, or debris, Forward Collision-Avoidance Assist operation may temporarily stop. In this case, the warning message appears to warn the driver.
This is not a malfunction with Forward Collision-Avoidance Assist. To operate Forward Collision-Avoidance Assist again, remove the foreign substances.
Forward Collision-Avoidance Assist may not properly operate in an area (e.g. open terrain), where any substances are not detected after turning ON the vehicle.

⚠ WARNING

Forward Collision-Avoidance Assist may not activate without any warning messages according to driving condition, traffic on the road, weather, road condition, etc.

Function malfunction

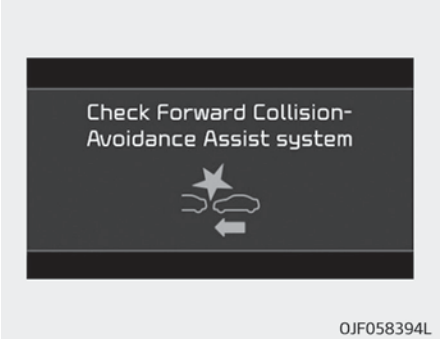

- When Forward Collision-Avoidance Assist is not working properly, the Forward Collision-Avoidance Assist warning light (⚠) will illuminate and the warning message will appear for a few seconds.
  After the message disappears, the master warning light (⚠) will illuminate. In this case, have the vehicle inspected by a professional workshop. Kia recommends to visit an authorized Kia dealer/service partner.
- Forward Collision-Avoidance Assist warning message may appear along with the illumination of the ESC warning light.

⚠ WARNING

- Forward Collision-Avoidance Assist is only a supplemental function for the driver's convenience. The driver should hold the responsibility to control the vehicle operation. Do not solely depend on Forward Collision-Avoidance Assist. Rather, maintain a safe braking distance, and, if necessary, depress the brake pedal to lower the driving speed.
- In certain instances and under certain driving conditions, Forward Collision-Avoidance Assist may activate unintentionally. This initial warning message appears on the LCD display with a warning chime.
  Also, in certain instances the front view camera or front radar recognition system may not detect the vehicle, pedestrian or cyclist ahead. Forward Collision-Avoidance Assist may not activate and the warning message will not be displayed.

(Continued)

(Continued)

- Forward Collision-Avoidance Assist may unnecessarily produce the warning message and the warning alarms. Also, due to the sensing limitation, Forward Collision-Avoidance Assist may not produce the warning message and the warning alarm at all.
- When there is a malfunction with Forward Collision-Avoidance Assist, the braking control does not operate upon detecting a collision risk even with other braking systems normally operating.
- Forward Collision-Avoidance Assist operates only for the vehicle / pedestrian in front, while driving forward. It does not operate for any animals or vehicles in the opposite direction.

(Continued)

(Continued)

- Forward Collision-Avoidance Assist does not recognize the vehicle, which transversally drives across the crossroad, or the vehicle, which is parked in the transversal direction.
- If the vehicle in front stops suddenly, you may have less control of the brake system. Therefore, always keep safe distance between your vehicle and the vehicle in front of you.
- Forward Collision-Avoidance Assist may activate during braking and the vehicle may stop suddenly. And the load in the vehicle may endanger passengers. Therefore, always be mindful of the load volume in the vehicle.
- Forward Collision-Avoidance Assist may not activate if the driver applies the brake pedal to avoid risk of collision.

(Continued)

(Continued)

- **Forward Collision-Avoidance Assist does not operate when the vehicle is in reverse. In these cases, you must maintain a safe braking distance, and if necessary, depress the brake pedal to reduce the driving speed in order to maintain a safe distance.**
- **The regular braking function will operate normally even if there is a problem with Forward Collision-Avoidance Assist brake control system or other functions. In this case, the braking control will not operate in the risk of a collision.**
- **Forward Collision-Avoidance Assist may not activate according to driving condition, traffic on the road, weather, road condition, etc.**
- **Forward Collision-Avoidance Assist may not activate to all types of vehicles.**

Limitation of Forward Collision-Avoidance Assist

Forward Collision-Avoidance Assist is an assistant function for a driver in a certain risky driving condition and it does not take every responsibility for all risks from driving condition.
Forward Collision-Avoidance Assist monitors the driving situations through the radar and the camera sensor. Thus, for a situation out of the sensing range, Forward Collision-Avoidance Assist may not normally operate. The driver should pay great caution in the following situations. Forward Collision-Avoidance Assist operation may be limited.

Recognizing vehicles

The sensor may be limited when:

- The front view camera or front radar is blocked with a foreign object or debris
- The front view camera lens is contaminated due to tinted, filmed or coated windshield, damaged glass, or stuck of foreign matter (sticker, bug, etc.) on the glass
- Inclement weather such as heavy rain or snow obscures the field of view of the front view camera or front radar
- There is interference by electromagnetic waves
- There is severe irregular reflection from the front radar sensor
- The front view camera or front radar recognition is limited
- The vehicle in front is too small to be detected (for example a motorcycle etc.)
- The vehicle in front is an oversize vehicle or trailer that is too big to be detected by the front view camera recognition system (for example a tractor trailer, etc.)
- The front view camera's field of view is not well illuminated (either too dark or too much reflection or too much backlight that obscures the field of view)
- The vehicle in front does not have their rear lights or their rear lights are not turned ON or their rear lights are located unusually.
- The outside brightness changes suddenly, for example when entering or exiting a tunnel
- When light coming from a street light or an oncoming vehicle is reflected on a wet road surface such as a puddle in the road

- The field of view in front is obstructed by sun glare
- The vehicle in front is driving erratically
- The vehicle is on unpaved or uneven rough surfaces, or road with sudden gradient changes.
- The vehicle is driven near areas containing metal substances as a construction zone, railroad, etc.
- The vehicle drives inside a building, such as a basement parking lot
- The front view camera does not recognize the entire vehicle in front.
- The front view camera is damaged.
- The brightness outside is too low such as when the headlamps are not on at night or the vehicle is going through a tunnel.
- The shadow is on the road by a median strip, trees, etc.
- The vehicle drives through a tollgate.
- The windshield glass is fogged up; a clear view of the road is obstructed.
- The rear part of the vehicle in front is not normally visible. (the vehicle turns in other direction or the vehicle is overturned.)
- The adverse road conditions cause excessive vehicle vibrations while driving
- The sensor recognition changes suddenly when passing over a speed bump
- The vehicle in front is moving longitudinally to the driving direction
- The vehicle in front is stopped longitudinally
- The vehicle in front is driving towards your vehicle or reversing
- You are on a roundabout and the vehicle in front circles

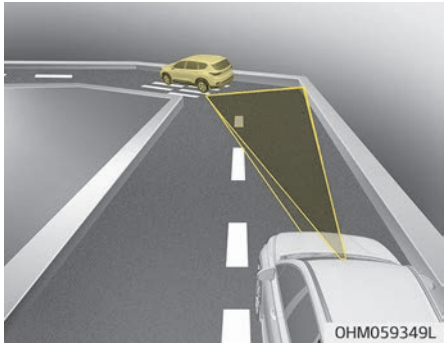

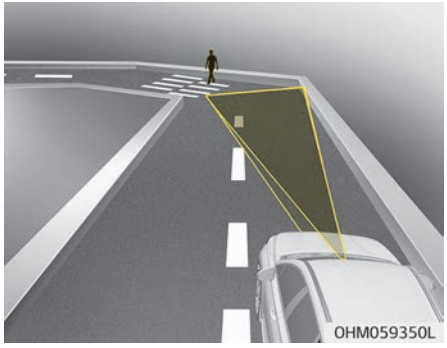

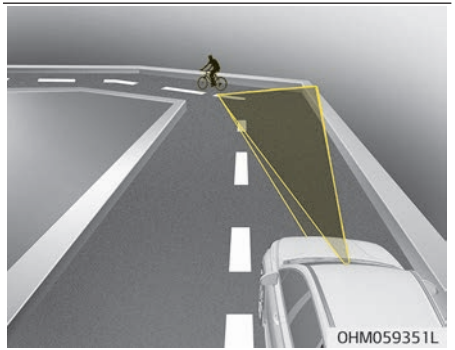

- Driving on a curved road
  The performance of Forward Collision-Avoidance Assist may be limited when driving on a curved road. The front camera or front radar sensor recognition system may not detect the vehicle, pedestrian or cyclist traveling in front on a curved road. This may result in no alarm and braking when necessary. Always pay attention to road and driving conditions, and if necessary, depress the brake pedal to reduce your driving speed in order to maintain a safe distance.

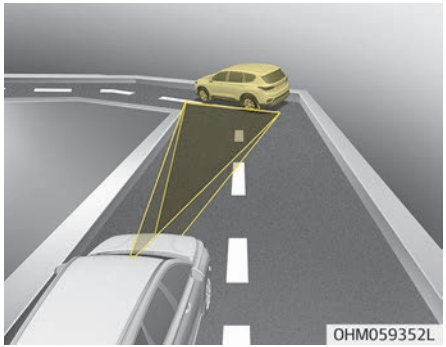

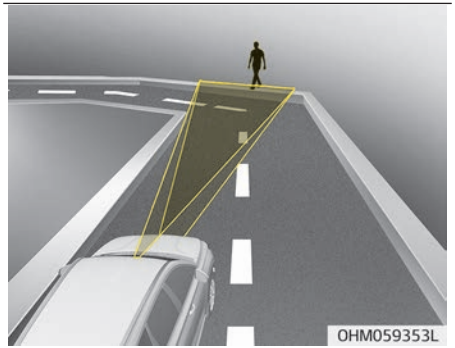

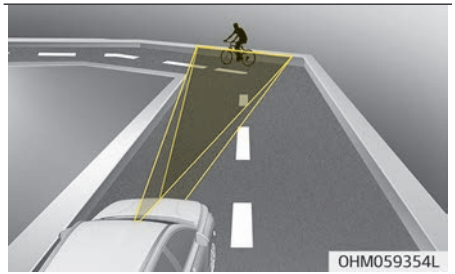

Forward Collision-Avoidance Assist may recognize a vehicle, pedestrian or cyclist in the next lane or outside the lane when driving on a curved road. If this occurs, the function may unnecessarily alarm the driver and apply the brake. Always pay attention to road and driving conditions, while driving.

- Driving on a sloped road
  The performance of Forward Collision-Avoidance Assist may be decreased while driving upward or downward on a sloped road. The front view camera or front radar sensor recognition may not detect the vehicle, pedestrian or cyclist in front. This may result in unnecessary alarm and braking or no alarm and braking when necessary. When the function suddenly recognizes the vehicle or pedestrian in front while passing over a slope, you may experience sharp deceleration. Always keep your eyes forward while driving upward or downward on a slope, and, if necessary, depress the brake pedal to reduce your driving speed in order to maintain distance.

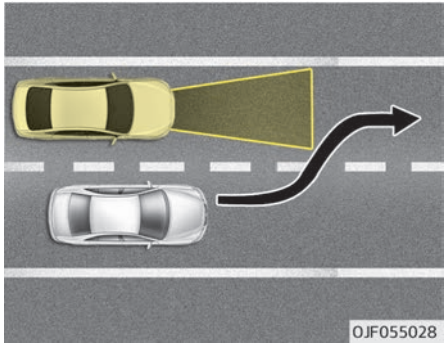

- Changing lanes
  Even though the vehicle in the next lane enters into your lane, it may not be recognized by Forward Collision-Avoidance Assist, until it enters Forward Collision-Avoidance Assist sensing range.
  Especially when the vehicle in the next lane abruptly enters into your lane, it is more likely not be recognized. Always pay great attention.

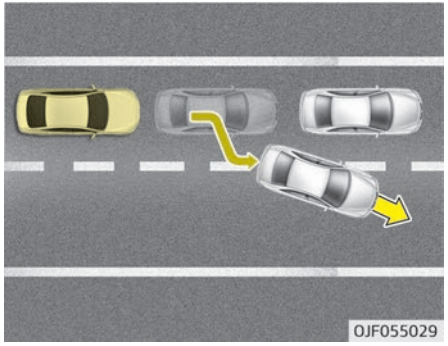

When driving in stop-and-go traffic, and a stopped vehicle in front of you merges out of the lane, Forward Collision-Avoidance Assist may not immediately detect the new vehicle that is now in front of you. In this case, you must maintain a safe braking distance, and if necessary, depress the brake pedal to reduce your driving speed in order to maintain a safe distance.

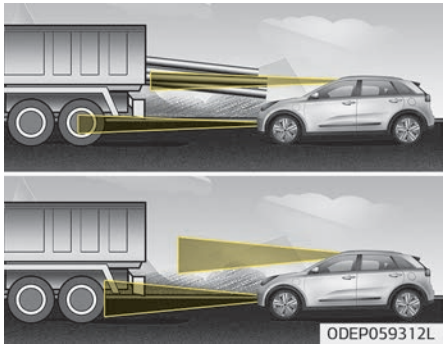

- Recognizing the vehicle
  When the vehicle in front has heavy loading extended rearward, or when the vehicle in front has higher ground clearance, it may induce a hazardous situation. Always pay attention to road and driving conditions, while driving and, if necessary, depress the brake pedal to reduce your driving speed in order to maintain distance.

Recognizing pedestrian or cyclist

- The pedestrian is not fully captured by the camera sensor, or the pedestrian does not walk in the upright position.
- The pedestrian moves very fast.
- The pedestrian abruptly appears in front.
- The pedestrian wears clothes in the color similar to the background.
- The outside is too bright or too dark.
- The vehicle drives at night or in the darkness.
- There is an item similar to a person's body structure.
- The pedestrian is small.
- The pedestrian has impaired mobility.
- It is difficult to distinguish the pedestrian from the surroundings.
- The sensor recognition is limited.
- There is a group of pedestrian.
- If a sudden change in the sensor recognition takes place while passing through the speed bump.
- When the vehicle is severely shaken.
- When driving around circular intersection after the vehicle in front.
- If the front view camera lens is contaminated by front glass tinting, film, water repellent coating, damage on glass, foreign matter (sticker, insect, etc.)

- The front radar or front view camera or front view camera lens is damaged.
- If the headlights of the vehicle are not used at night or in the tunnel section, or the light is too weak.
- If street light or the light of the vehicle coming from the opposite is reflected or when sunlight is reflected by the water on the road surface.
- When the back light is projected in the direction of the vehicle's motion (including the headlights of vehicles).
- Road sign, shadow on the road, tunnel entrance, toll gate, partial pavement.
- If the windshield has moisture on its surface or if windshield freezes,
- Driving in the fog.
- When objects are out of the sensing range of the sensor or front radar.
- When the cyclist in front is riding intersected with the driving direction.
- When there is any other electromagnetic interference.
- When the construction area, rail or other metal object is near the cyclist.
- If the bicycle material is not reflected well on the radar.

⚠ WARNING

- **Cancel Forward Collision-Avoidance Assist in the User Settings on the LCD display, before towing another vehicle. While towing, the brake application may adversely affect your vehicle safety.**
- **Pay great caution to the vehicle in front, when it has heavy loading extended rearward, or when it has higher ground clearance.**
- **The sensor only detects pedestrian, not carts, bicycles, motorcycles, luggage bags, or strollers.**
- **Forward Collision-Avoidance Assist does not operate in a certain situation. Thus, never test-operate Forward Collision-Avoidance Assist against a person or an object. It may cause a severe injury or even death.**

(Continued)

(Continued)

- **When replacing or reinstalling the windshield, front bumper or radar/camera after removal, have the vehicle inspected by a professional workshop. Kia recommends to visit an authorized Kia dealer/service partner.**

✻ NOTICE

The function may temporarily cancel due to the strong electric waves.

LANE KEEPING ASSIST (LKA) (IF EQUIPPED)

Lane Keeping Assist detects the lane markers and road edge on the road with a front view camera at the front windshield, and assists the driver's steering to help keep the vehicle in the lanes.
When the function detects the vehicle straying from its lane or road, it warns the driver with a visual and audible warning, while applying a slight counter-steering torque, trying to prevent the vehicle from moving out of its lane or road.

⚠ WARNING

- **Driver is responsible for being aware of surroundings and steering the vehicle for safe driving practices.**
- **Do not steer the steering wheel suddenly when the steering wheel is being assisted by the function.**
- **Lane Keeping Assist helps prevent the driver from moving out of the lane or road unintentionally by assisting the driver's steering. However, Lane Keeping Assist is just a convenience function and the steering wheel is not always controlled. While driving, the driver should pay attention to the steering wheel.**
- **The operation of Lane Keeping Assist can be canceled or not work properly according to road condition and surroundings. Always be cautious when driving.**

(Continued)

(Continued)

- **Do not disassemble a front view camera temporarily for tinted window or attaching any types of coatings and accessories.**
  If you disassemble the front view camera and assemble it again, have the function checked by a professional workshop. Kia recommends to visit an authorized Kia dealer/service partner and have the function checked to need a calibration.
- **When you replace the windshield glass, front view camera or related parts of the steering, have the function checked by a professional workshop. Kia recommends to visit an authorized Kia dealer/service partner and have the function checked to need a calibration.**

(Continued)

(Continued)

- **The function detects lane markers and road edge and controls the steering wheel by a front view camera, therefore, if the lane markers are hard to detect, the function may not work properly. Always be cautious when using the function.**
- **When the lane markers and road edge are hard to detect, please refer to "Driver's Attention" on page 6-67.**
- **Do not remove or damage the related parts of front view camera.**
- **Do not place objects on the crash pad that reflects light such as mirrors, white paper, etc. it may cause malfunction of Lane Keeping Assist if the sunlight is reflected.**
- **You may not hear warning sound of Lane Keeping Assist because of the excessive audio sound.**

(Continued)

(Continued)

- **While other beeps such as the seat belt warning sound are in operation and override Lane Keeping Assist alarming, Lane Keeping Assist beeps may not occur.**
- **If the vehicle speed is high, steering torque for assistance will not be enough to keep your vehicle within the lane. If so, the vehicle may move out of its lane. Obey speed limit when using Lane Keeping Assist.**
- **If you attach objects to the steering wheel, the function may not assist steering.**
- **If you attach objects to the steering wheel, hands off alarm may not work properly.**

LKA operation

To activate/deactivate Lane Keeping Assist:
With the ENGINE START/STOP button in the ON position, Lane Keeping Assist turns on automatically. The indicator (🚗) in the cluster display will initially illuminate white. If you press the Lane Safety button located on the instrument panel on the lower left hand side of the driver, Lane Keeping Assist will be turned off and the indicator on the cluster display will go off.

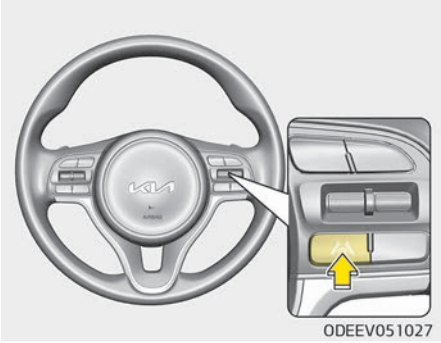

To activate/deactivate LKA, with the ENGINE START/STOP button in the ON position, press and hold the Lane Driving Assist button ( ) located on the steering wheel to turn off Lane Keeping Assist. Press and hold the button again to turn on the function.
The indicator ( ) in the cluster display will initially illuminate white.
If you pressing and holding the Lane Driving Assist button located on the steering wheel, LKA will be turned off and the indicator on the cluster display will go off.

The color of indicator will change depend on the condition of Lane Keeping Assist.

- White : Sensor does not detect the lane marker or vehicle speed is less than 60 km/h (37 mph).
- Green : Sensor detects the lane marker or road edge and function is able to control the steering.

Lane Keeping Assist activation

- To see Lane Keeping Assist screen on the LCD display in the cluster, Tab to the Driving Assist mode ( ).
- After Lane Keeping Assist is activated, if both lane markers or road edge are detected, vehicle speed is over 60 km/h (37 mph) and all the activation conditions are satisfied, a green steering wheel indicator will illuminate and the steering wheel will be controlled.

Lane Keeping Assist setting

The driver can change Lane Keeping Assist to Lane Departure Warning or change the Lane Keeping Assist mode from the LCD display. "User Settings ➡ Driver Assistance ➡ Lane Safety ➡ Lane Keeping Assist/Lane Departure Warning/Off".

Lane Keeping Assist

Lane Keeping Assist mode guides the driver to keep the vehicle within the lanes. It rarely controls the steering wheel, when the vehicle drives well inside the lanes. However, it starts to control the steering wheel, when the vehicle is about to deviate from the lanes.

Lane Departure Warning

Lane Departure Warning warns the driver with a visual and acoustic warning when the function detects the vehicle leaving the lane. In this mode, the steering wheel will not be controlled. When the vehicle's front wheel contacts the inside edge of lane line, the contacted line will be displayed on the LCD display.

Off

If you select 'Off', it is the same with pressing Lane Safety ( ) button to release.

✻ NOTICE

When Lane Keeping Assist is turned off with the Lane Driving Assist button, Lane Safety settings will turn off.

⚠ WARNING

Lane Keeping Assist is a function to help prevent the driver from leaving the lane or road edge. However, the driver should not solely rely on the function but always check the road conditions when driving.

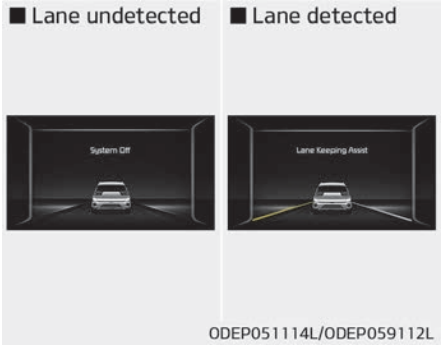

If the speed of the vehicle is over 60 km/h (37 mph) and the function detects lane markers, the color changes from gray to white.

Warning

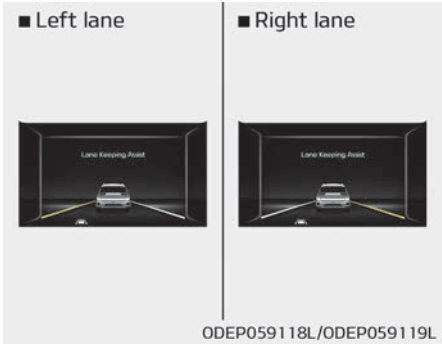

If the vehicle leaves a lane or road edge, the lane marker or road edge you cross will blink on the LCD display and the warning sound is provided.

⚠ WARNING

- **The warning message may appear late according to road conditions. Therefore, always have your hands on the steering wheel while driving.**

(Continued)

(Continued)

- **If you hold the steering wheel lightly, the function would generate hands off warning because Lane Keeping Assist can treat the situation as you do not grab the wheel.**

⚠ WARNING

- **The driver is responsible for accurate steering.**
- **Even though the steering is assisted by the function, the driver may control the steering wheel.**
- **Turn off the function and drive the vehicle in below situations.**
  - **In bad weather**
  - **In bad road condition**
  - **When the steering wheel needs to be controlled by the driver frequently.**
  - **When towing a vehicle or trailer.**

(Continued)

(Continued)

- **The steering wheel may feel heavier when the steering wheel is assisted by the function than when it is not.**

✻ NOTICE

- Even though the steering is assisted by the function, the driver may control the steering.
- The steering wheel may feel heavier when the steering wheel is assisted by the function than when it is not.

The function will be canceled when:

- You change lanes with the turn signal.
  - Using the turn signal to change lanes.
  - If you change lanes without the turn signal on, the steering wheel might be controlled.
- Lane Keeping Assist can transit to steering assist mode when the car is near to middle of the lane after function on or the lane was changed. Lane Keeping Assist can not assist steering if the vehicle follows lane marker too close continuously before transition to steering assist mode.
- The control of ESC (Electronic Stability Control) or VSM (Vehicle Stability Management) is activated.
- The steering will not be assisted when your drive fast on a sharp curve.
- The steering will not be assisted when vehicle speed is below 55 km/h (34 mph) and over 200 km/h (125 mph).
- The steering will not be assisted when you change lanes or road edge fast.
- The steering will not be assisted when you brake suddenly.
- The steering will not be assisted when the lane is very wide or narrow.
- The steering will not be assisted when only one side lane marker is detected.
- There are more than two lane markers such as a construction area.

- Radius of a curve is too small.
- When you turn steering wheel suddenly, Lane Keeping Assist will be disabled temporarily.
- Driving on a steep slope or hill.

Driver's attention

The driver must be cautious in the below situations may not work properly when recognition of the lane marker is poor or limited :

When lane and road condition is poor

- It is difficult to distinguish the lane marker or road edge from road when the lane marker or road edge is covered with dust or sand.
- It is difficult to distinguish the color of the lane marker from road.
- There is something looks like a lane marker.
- The lane marker or road edge is indistinct or damaged.
- The number of lanes increases/decreases or the lane lines are crossing (Driving through a toll plaza/toll gate, merged/divided lane).
- There are more than two lane markers.
- The lane marker is very thick or thin.
- The lane marker or road edge is not visible due to snow, rain, stain, a puddle or other factors.
- A shadow is on the lane marker or road edge because of a median strip, guardrail, noise barriers and others.
- When the lane markers are complicated or a structure substitutes for the lines such as a construction area.
- There are crosswalk signs or other symbols on the road.
- The lane suddenly disappears such as at the intersection.
- The lane marker or road edge in a tunnel is covered with dirt or oil and etc.
- The lane is very wide or narrow.

When external condition is intervened

- The brightness of outside changes suddenly when entering/existing a tunnel or passing under a bridge.
- The headlamps are not on at night or in a tunnel, or light level is low.
- There is a boundary structure in the roadway.
- The light of street, sun, oncoming vehicle and so on reflects from the water on the road.
- When light shines brightly in the reverse direction you drive.
- Road surface is not even.
- The distance from the vehicle ahead is very short or the vehicle ahead drives hiding the lane line or road edge.
- You drive on a steep grade or a sharp curve.
- The vehicle vibrates heavily.
- The temperature near inside mirror is very high due to direct sun light and etc.

When front visibility is poor

- The lens or windshield is covered by strange materials.
- The sensor cannot detect the lane because of fog, heavy rain or snow.
- The windshield is fogged by humid air in the vehicle.
- Putting something on the crash pad and etc.

⚠ WARNING

Lane Keeping Assist is a function to help prevent the driver from leaving the lane. However, the driver should not solely rely on the function but always take the necessary actions for safe driving practices.

Lane Keeping Assist malfunction

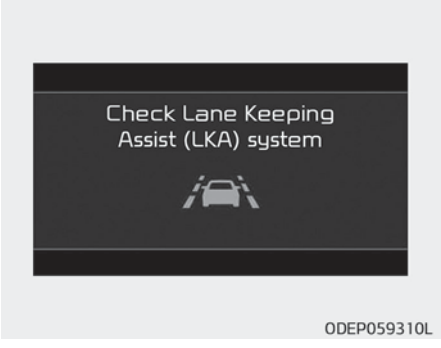

- If there is a problem with the function a message will appear. If the problem continues Lane Keeping Assist fail indicator will illuminate.

Lane Safety indicator

Lane Safety indicator Lane Keeping Assist fail indicator (yellow) will illuminate with an audible warning if Lane Keeping Assist is not working properly. In this case, have the function checked by a professional workshop. Kia recommends to visit an authorized Kia dealer/service partner.

When there is a problem with the function do one of the following:

- Turn the function on after turning the vehicle off and on again.
- Check if the ENGINE START/STOP button is in the ON position.
- Check if the function is affected by the weather. (ex: fog, heavy rain, etc.)
- Check if there is foreign matter on the camera lens.

If the problem is not solved, have the function checked by a professional workshop. Kia recommends to visit an authorized Kia dealer/service partner.

BLIND-SPOT COLLISION WARNING (BCW) (IF EQUIPPED)

Blind-Spot Collision Warning uses radar sensors in the rear bumper to monitor and warn the driver of an approaching vehicle in the driver's blind spot area.
1) Blind-Spot Area

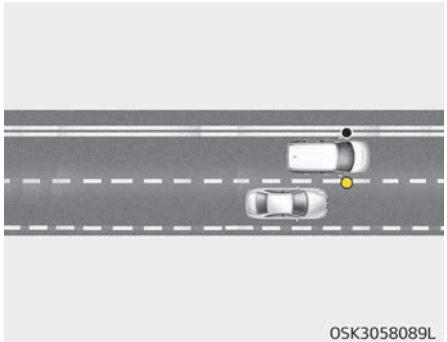

The blind spot detection range varies relative to vehicle speed.
Note that if your vehicle is traveling much faster than the vehicles around you, the warning will not occur.
2) Closing at high speed

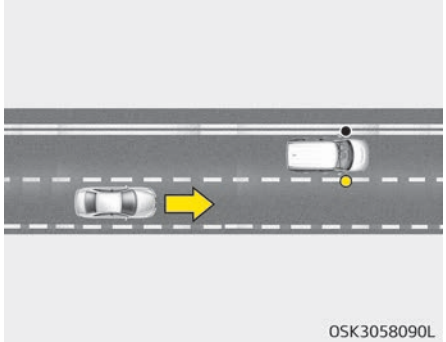

Blind-Spot Collision Warning will warn you when a vehicle is approaching in an adjacent lane at a high rate of speed. If the driver activates the turn signal when the function detects an oncoming vehicle, the function sounds an audible warning.

⚠ WARNING

- **Blind-Spot Collision Warning is supplemental function to assist you. Do not entirely rely on the function.**
  Always pay attention, while driving, for your safety.
- **Always be aware of road conditions while driving and be alert for unexpected situations even though Blind-Spot Collision Warning is operating.**
- **Blind-Spot Collision Warning is not a substitute for proper and safe driving. Always drive safely and use caution when changing lanes or backing up the vehicle. Blind-Spot Collision Warning may not detect every object alongside the vehicle.**

Setting and activation

Setting

1. Place the START/STOP button to the ON position.
2. Select 'User Settings ➡ Driver Assistance ➡ Blind-Spot Safety'
3. Select one of the following options:

- Warning only: Blind-Spot Collision Warning turns on and gets ready to be activated. Then, if a vehicle approaches the driver's blind spot area only a warning sounds.
- Off: Blind-Spot Collision Warning is deactivated and the indicator on the Blind-Spot Safety button is extinguished.

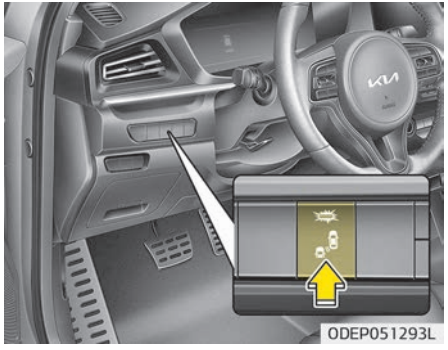

- If you press Blind-Spot Safety button while 'Warning only' is selected the indicator on the button extinguishes and the function deactivates.
- If you press Blind-Spot Safety button while the function is cancelled the indicator on the button illuminates and the function activates. In this case, the function returns to the state before the vehicle turned off. When the function is initially turned on and when the motor is turned off then on again while the function is in activation, the warning light will illuminate for 3 seconds on the outside rearview mirror.
- If the vehicle is turned off then on again, the function maintains the previous state.
- Select 'User Settings ➡ Driver Assistance ➡ Warning timing'
- Select one of the following options:
  - Normal: The initial Blind-Spot Collision Warning is activated normally. If this setting feels too sensitive change the option to 'Later'.
  - Later: Select this warning activation time when the traffic is light and you are driving in a low speed. However, if you change the warning activation time, the warning activation time of vehicle's other function may also change. Check the warning activation time before changing it.

Warning message and function control

Blind-Spot Collision Warning (BCW)

First stage warning

If a vehicle is detected within the boundary of the function, a warning light will illuminate on the outside rearview mirror and the head up display (if equipped).
Once the detected vehicle is no longer within the blind spot area, the warning will turn off according to the driving conditions of the vehicle.

Second stage warning

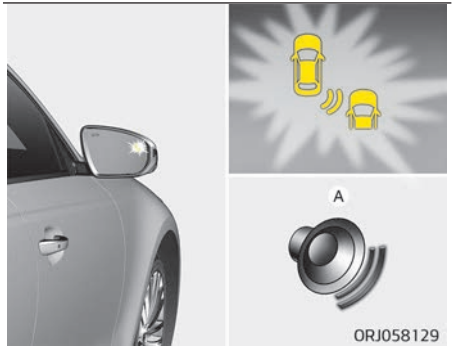

[A] :Warning sound
A warning chime to warn the driver will activate when:

1. A vehicle has been detected in the blind spot area by the radar function AND.
2. The turn signal is applied (same side as where the vehicle is being detected). When this warning is activated, the warning light on the outside rearview mirror and the head up display (if equipped) will also blink. And a warning chime will sound.
   If you turn off the turn signal indicator, the second stage warning will be deactivated.
   Once the detected vehicle is no longer within the blind spot area, the warning will turn off according to the driving conditions of the vehicle.

⚠ WARNING

- **The warning light on the outside rearview mirror will illuminate whenever a vehicle is detected at the rear side by the function.**
  To avoid accidents, do not focus only on the warning light and neglect to see the surrounding of the vehicle.
- **Drive safely even though the vehicle is equipped with a Blind-Spot Collision Warning. Do not solely rely on the function but check your surrounding before changing lanes or backing the vehicle up.**
- **The function may not warn the driver in some conditions so always check your surroundings while driving.**

⚠ CAUTION

- **The driver should always use extreme caution while operating the vehicle, whether or not the warning light on the outside rear view mirror illuminates or there is a warning alarm.**
- **Playing the vehicle audio system at high volume may offset Blind-Spot Collision Warning warning sounds.**
- **The warning of Blind-Spot Collision Warning may not sound while other function's warning sounds.**

Detecting sensor

The rear corner radars are the sensors inside the rear bumper for detecting the side/rear areas. Always keep the rear bumper clean for proper operation of the function.

⚠ CAUTION

- **The function may not work properly when the bumper has been damaged, or if the rear bumper has been replaced or repaired.**
- **The sensing range differs somewhat according to the width of the road. When the road is narrow, the function may detect other vehicles in the next lane.**
- **The function may turn off due to strong electromagnetic waves.**
- **Always keep the sensors clean.**
- **Never arbitrarily disassemble the sensor component nor apply any impact on the sensor component.**

(Continued)

(Continued)

- **Be careful not to apply unnecessary force on the radar sensor or sensor cover. If the sensor is forcibly moved out of proper alignment, the function may not operate correctly.**
  In this case, a warning message may not be displayed.
  Kia recommend that you have your vehicle inspected by an authorized Kia dealer/service partner.
- **Do not apply foreign objects such as a bumper sticker or a bumper guard near the radar sensor or apply paint to the sensor area. Doing so may adversely affect the performance of the sensor.**
- **Never install any accessories or stickers on the front windshield, nor tint the front windshield.**
- **Pay extreme caution to keep the camera sensor out of water.**

(Continued)

(Continued)

- **Never locate any reflective objects (i.e. white paper, mirror) over the crash pad. Any light reflection may cause a malfunction of the function.**

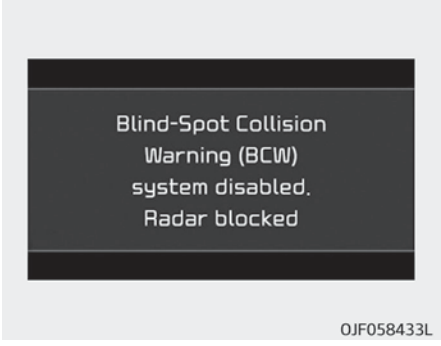

Blind-Spot Collision Warning (BCW) disabled.

- This warning message may appear when :
  - One or both of the sensors on the rear bumper is blocked by dirt or snow or a foreign object.
  - Driving in rural areas where the sensor does not detect another vehicle for an extended period of time.
  - When there is inclement weather such as heavy snow or rain.

If any of these conditions occur, the light on Blind-Spot Safety button and the function will turn off automatically.

Turn off Blind-Spot Collision Warning (if equipped) when a trailer or carrier is installed.

- Press the Blind-Spot Safety button (the indicator on the button extinguish)
- Deactivate Rear Cross-Traffic Collision Warning by deselecting
  'User Settings ➡ Driver Assistance ➡ Blind-Spot Safety ➡ Warning Only/ OFF'
  If you use Blind-Spot Collision Warning, remove a trailer or carrier.

When Blind-Spot Collision Warning canceled warning message is displayed in the cluster, check to make sure that the rear bumper is free from any dirt or snow in the areas where the sensor is located. Remove any dirt, snow, or foreign material that could interfere with the rear corner radar sensors.
After any dirt or debris is removed, Blind-Spot Collision Warning should operate normally after about 10 minutes of driving the vehicle.
If the function still does not operate normally, Kia recommend that you have your vehicle inspected by an authorized Kia dealer/service partner.

Check Blind-Spot Collision Warning

If there is a problem with the Blind-Spot Collision Warning function, a warning message will appear and the light on the switch will turn off. The function will turn off automatically. In this case, have the system checked by a professional workshop. Kia recommends to visit an authorized Kia dealer/service partner.

Limitations of the function

The driver must be cautious in the below situations, because the function may not detect other vehicles or objects in certain circumstances.

- When a trailer or carrier is installed.
- The vehicle drives in inclement weather such as heavy rain or snow.
- The rear corner radar is polluted with rain, snow, mud, etc.
- The rear bumper where the rear corner radar is located is covered with a foreign object such as a bumper sticker, a bumper guard, a bike rack, etc.
- The rear bumper is damaged, or the rear corner radar is out of the original default position.
- The vehicle height gets lower or higher due to heavy loading in a trunk, abnormal tire pressure, etc.
- When the temperature of the rear bumper is high.
- When the rear corner radar are blocked by other vehicles, walls or parking-lot pillars.
- The vehicle drives on a curved road.
- The vehicle drives through a tollgate.
- The road pavement (or the peripheral ground) abnormally contains metallic components (i.e. possibly due to subway construction).
- There is a fixed object near the vehicle, such as a guardrail.
- While going down or up a steep road where the height of the lane is different.
- Driving on a narrow road where trees or grass or overgrown.
- Driving in rural areas where the sensor does not detect another vehicle or structure for an extended period of time.
- Driving on a wet road.
- Driving on a road where the guardrail or wall is in double structure.

- A big vehicle is near such as a bus or truck.
- When the other vehicle approaches very close.
- When the other vehicle passes at a very fast speed.
- While changing lanes.
- If the vehicle has started at the same time as the vehicle next to you and has accelerated.
- When the vehicle in the next lane moves two lanes away from you OR when the vehicle two lanes away moves to the next lane from you.
- A motorcycle or bicycle is near.
- A flat trailer is near.
- If there are small objects in the detecting area such as a shopping cart or a baby stroller.
- If there is a low height vehicle such as a sports car.
- The brake pedal is depressed.
- ESC (Electronic Stability Control) is activated.
- ESC (Electronic Stability Control) malfunctions.
- The tire pressure is low or a tire is damaged.
- The brake is reworked.
- The vehicle abruptly changes driving direction.
- The vehicle makes sharp lane changes.
- The vehicle sharply stops.
- Temperature is extremely low around the vehicle.
- The vehicle severely vibrates while driving over a bumpy road, uneven/bumpy road, or concrete patch.
- The vehicle drives on a slippery surface due to snow, water puddle, or ice.

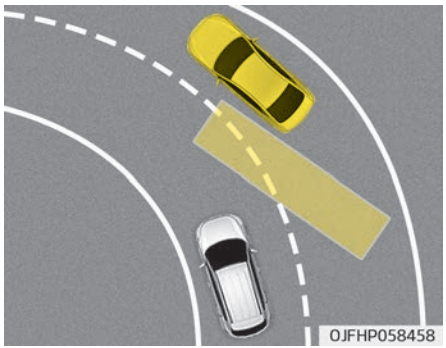

- Driving on a curved road
  Blind-Spot Collision Warning may not operate properly when driving on a curved road. In certain instances the function may not detect the vehicle in the next lane.
  Always pay attention to road and driving conditions, while driving.

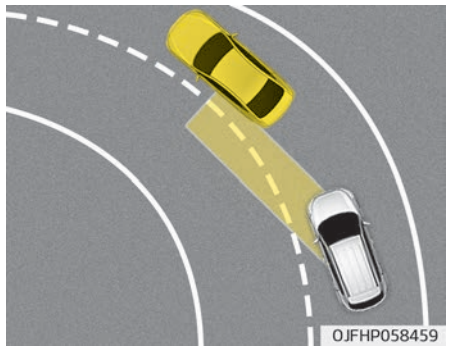

Blind-Spot Collision Warning may not operate properly when driving on a curved road. In certain instances the function may recognize a vehicle in the same lane.
Always pay attention to road and driving conditions, while driving.

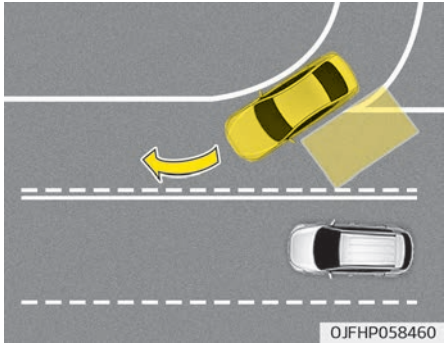

- Driving where the road is merging/dividing
  Blind-Spot Collision Warning may not operate properly when driving where the road is merging/dividing. In certain instances the function may not detect the vehicle in the next lane.
  Always pay attention to road and driving conditions, while driving.

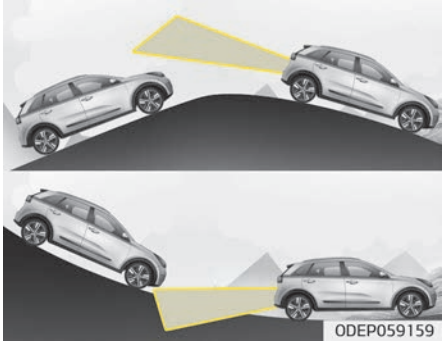

- Driving on a sloped road
  Blind-Spot Collision Warning may not operate properly when driving on a slope. In certain instances the function may not detect the vehicle in the next lane.
  Also, in certain instances the function may wrongly recognize the ground or structures.
  Always pay attention to road and driving conditions, while driving.

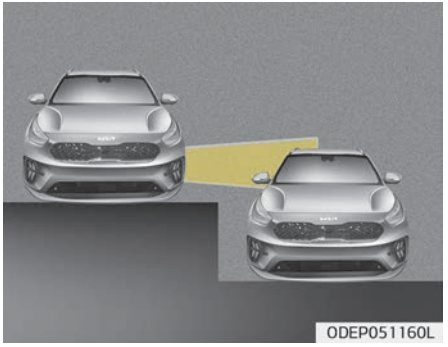

- Driving where the heights of the lanes are different
  Blind-Spot Collision Warning may not operate properly when driving where the heights of the lanes are different.
  In certain instances, the function may not detect the vehicle on a road with different lane heights (underpass joining section, grade separated intersections, etc.).
  Always pay attention to road and driving conditions, while driving.

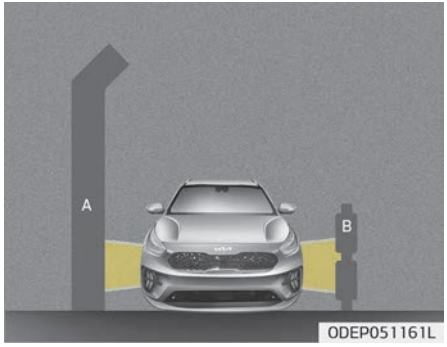

[A] : noise barrier, [B] : guardrail

- Driving where there is a structure beside the road
  Blind-Spot Collision Warning may not operate properly when driving where there is structure beside the road.
  In certain instances, the function may wrongly recognize the structures (noise barriers, guardrail, double guardrail, median strip, bollard, street light, road sign, tunnel wall, etc.) beside the road.
  Always pay attention to road and driving conditions, while driving.

MANUAL SPEED LIMIT ASSIST (MSLA) (IF EQUIPPED)

You can set the speed limit when you do not want to drive over a specific speed.
If you drive over the preset speed limit, the warning function operates (set speed limit will blink and chime will sound) until the vehicle speed returns within the speed limit.

✻ NOTICE

While Manual Speed Limit Assist is in operation, cruise control cannot be activated.

To set speed limit:

1. Press the MODE button twice on the steering wheel, to turn the function on.

The speed limit indicator light will illuminate.

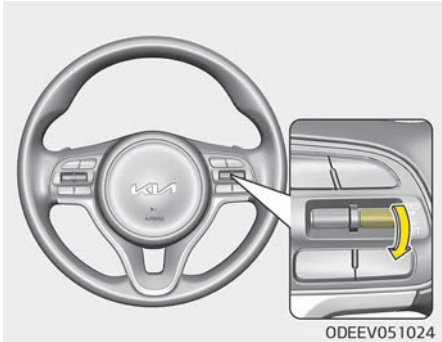

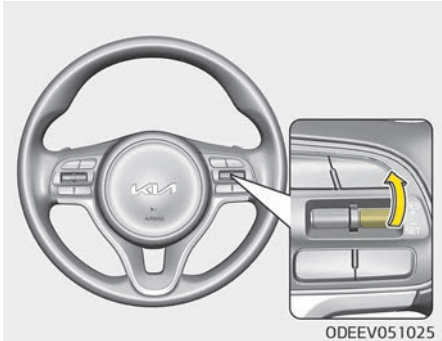

2. Move the switch down (to SET-).

3. Move the switch up (to RES+) or down (to SET-), and release it at the desired speed. Move the switch up (to RES+) or down (to SET-) and hold it. The speed will increase or decrease by 5 km/h (3 mph).
   Move the switch up (to RES+) or down (SET-) and release it immediately. The speed will increase or decrease by 1 km/h (1 mph).
   The set speed limit will display on the instrument cluster.

The set speed limit will be displayed.

To drive over the preset speed limit you must depress hard on the accelerator pedal (more than approximately 80%) until the kick down mechanism works with a clicking noise. Then the set speed limit will blink and chime will sound until you return the vehicle speed within the speed limit.

✻ NOTICE

- Depressing the accelerator pedal less than approximately 50%, the vehicle will not speed over the preset speed limit but maintain the vehicle speed within the speed limit.
- A clicking noise heard from the kick down mechanism by depressing the accelerator pedal fully is a normal condition.

To turn off Manual Speed Limit Assist

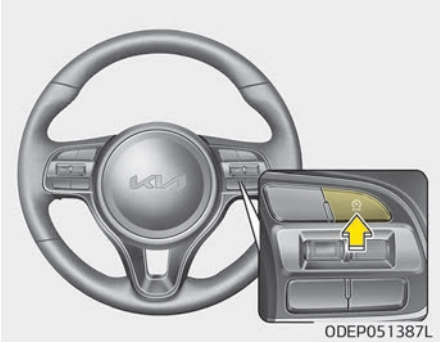

- Press MODE button.
- Turn the ignition off.

If you press the cancel O button once, the set speed limit will cancel, but it will not turn the function off. If you wish to reset the speed limit, move the switch up (to RES+) or down (to SET-) to the desired speed.

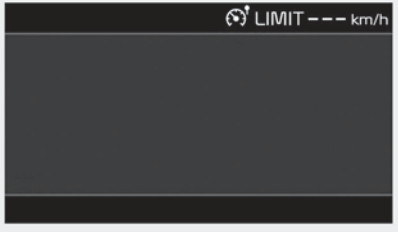

OJF058153L

⚠ CAUTION

The "---" indicator will blink if there is a problem with Manual Speed Limit Assist.
In this case, have the function checked by a professional workshop. Kia recommends to visit an authorized Kia dealer/service partner.

INTELLIGENT SPEED LIMIT WARNING (ILSW) (IF EQUIPPED)

The function displays the information of speed limit and no passing restriction to the driver in both the instrument cluster and navigation screen. ISLW detects traffic signs with front view camera attached on the top of the windscreen.
ISLW also utilizes the navigation information to display the speed limit information.

⚠ WARNING

- **Intelligent Speed Limit Warning (ISLW) is only an aid and is not always able to correctly display speed limits and overtaking restrictions.**
- **The driver always keeps the responsibility not to exceed the maximum allowed speed.**
- **Do not place any accessories, stickers or tint the windshield near the rearview mirror.**
- **The function detects traffic signs and displays speed limit information by a front view camera therefore, if traffic signs are hard to detect, the function may not work properly.**
  Please refer to "Driver's attention" on page 6-84.
- **Do not remove any front view camera parts or apply impact.**

(Continued)

(Continued)

- **Do not place objects on the dashboard that reflects light such as mirrors, white paper, etc. The function may malfunction if the sunlight is reflected.**
- **The function is not available in all countries.**

Intelligent Speed Limit Warning activation / deactivation

- Intelligent Speed Limit Warning Setting method :
  Cluster User Settings ➡ Driver Assistance ➡ SLW (Speed Limit Warning) Assist
- The information of speed limit and no passing restriction will appear on the cluster using a symbol if you have activated 'SLW' in User Settings of cluster.
- If Intelligent Speed Limit Warning is activated in navigation setting, the information also displayed in navigation screen.

Operation

■ Type A

OJF058186L

■ Type B

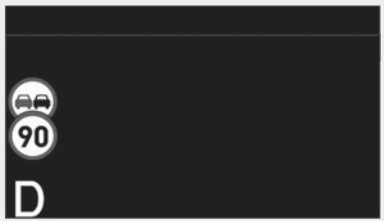

OJF058436L

- If a traffic sign that is relevant to your vehicle is passed, the function displays the information of the speed limits and no passing restrictions to the driver.
- When the driver turn on the ignition, the function displays stored information of the speed limit before turn off the ignition.
- Sometimes different speed limits are displayed for the same road. The information displayed depending on the situation. Because, traffic signs with additional sign (e.g rainy, arrow...) are also detected and compared with vehicle interior data (e.g wiper operation, turn signal...).
- The function can update the speed limit information without visible speed limit signs in the following situations.
  - When you change your driving direction with right or left or U turning.
  - When vehicle changes roads. (e.g. from highway to country road...)
  - When you enter or exit into town or village.

✻ NOTICE

If speed limit value has the difference between cluster and navigation, check the speed unit setting in navigation.

Display

■ No reliable speed limit information

WUM-203

- If the function doesn't have a reliable Intelligent Speed Limit, the following symbol is displayed in both the instrument cluster and navigation screen.

■ No passing Intelligent

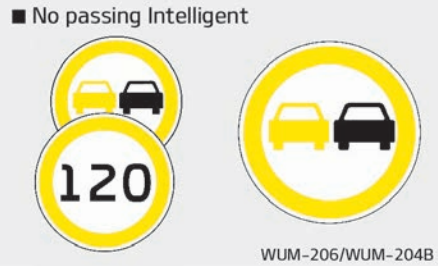

- If the function detect no passing sign, no passing is displayed in both the instrument cluster and navigation screen.

■ End of a speed limit

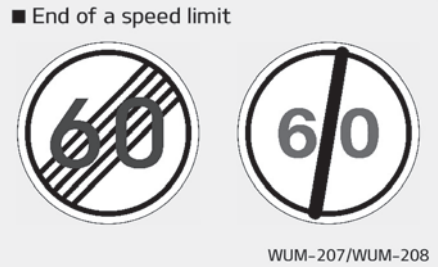

- After passing "end of speed limitation" sign Intelligent Speed Limit Warning provides information from navigation to inform driver of perhaps afterwards applicable speed limit.

■ Unlimited speed (only in Germany)

- For some areas on highways in Germany there's no speed limit applicable. In that case Intelligent Speed Limit Warning shows "end of limitation" traffic sign as long as you don't pass another speed limit sign.

Warning message

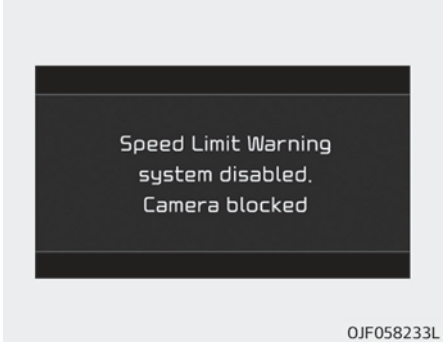

The message will appear when camera's field of view is covered by some objects. The function stops until the field of view is normal.
Check the windshield around the camera view area.
If the function does not work normally even though camera's field of view is cleared, have the function checked by a professional workshop. Kia recommends to visit an authorized Kia dealer/service partner.

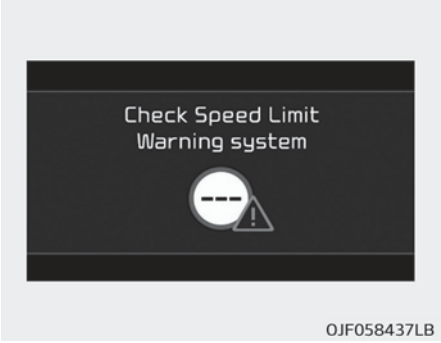

When Intelligent Speed Limit Warning is not working properly, the warning message will come on for a few second. After the message disappears, the master warning light will illuminate.
In this case, have the function checked by a professional workshop.
Kia recommends to visit an authorized Kia dealer/service partner.
The function may not fully operate and provide correct information in the following situations.

- Traffic signs are positioned on sharp curve.
- Poorly positioned traffic sign. (eg. Rotated, shaded by any object, damaged...)
- Concealed traffic signs by other vehicle.
- Broken LED traffic signs.
- Poor weather like snow, rain, fog.
- Reflected glare around and/or on the traffic sign.
- There is insufficient illumination of the traffic signs in the night.
- There is bright lights around traffic signs.
- There is dirt, ice or frost on the windshield in the area of the camera.
- When front view camera field of view is covered by objects such as a sticker, paper, leaf fall.
- When driving very close to the vehicle in front of you.
- When navigation system has malfunction.
- When bus or trucks attached with a speed sticker are passing you.
- When you are at a certain location not covered by the navigation system.
- When the navigation system is not updated to the latest map version.

Driver's attention

The driver must be cautious in the below situations for the function may not assist the driver and may not work properly.

- Do not stick or attach anything to the windshield in front of the camera as this may reduce effectiveness or cause one more of the function dependent on the camera to stop working.
- Keep the windshield in the area behind the interior rear view mirror clean.
- Do not place reflective materials, such as white paper or a mirror, on the instrument panel.
- Do not strike or damage the areas around the camera unit.
- Do not touch the front view camera lens or remove the screw located on the front view camera unit.
- The function does not work in all situations but is designed merely as a supplementary aid.
- The function assists the driver and does not replace the human eye.

- The driver always bears ultimate responsibility for ensuring that the vehicle is driven safely and that applicable road traffic rules and regulations are followed.

DRIVER ATTENTION WARNING (DAW) (IF EQUIPPED)

Driver Attention Warning is to warn the driver with any hazardous driving situations upon detecting the driver's fatigue level or inattentive driving patterns.

Basic function

Driver Attention Warning can help determine the driver's attention level by analyzing driving pattern and driving time while vehicle is being driven. Driver Attention Warning will recommend a break when the driver's attention level falls below a certain level.

Leading vehicle departure alert function

Leading Vehicle Departure Alert function will inform the driver when a detected vehicle in front departs from a stop.

Driver Attention Warning setting and activation

Setting

Driver Attention Warning setting

- Driver Attention Warning is set to be in the Normal position, when your vehicle is first delivered to you from the factory.
- To turn ON the Driver Attention Warning, turn on the engine, and then select 'User Settings ➡ Driver Assistance ➡ Driver Attention Warning ➡ Low Activity Warning' on the LCD display.
- The set-up of Driver Attention Warning will be maintained, as selected, when the engine is restarted.

Warning timing

- The driver can select the Warning timing as;
- Turn on the engine and select 'User Settings ➡ Driver Assistance ➡ Warning timing' on the LCD display.
- 'Normal' is default setting for general driving condition. If the 'Warning timing' for 'Normal' is too sensitive, change the setting to 'Later'.

✻ NOTICE

In case of changing 'Warning timing' setting, the warning timing of the driver assistance function such as Forward Collision-avoidance Assist will be changed together.

Display of the driver's attention level

OJF058422L

ODEP050340L

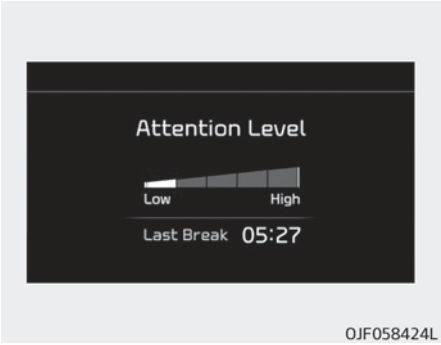

OJF058424L

- The driver can monitor their driving conditions on the LCD display.

– Select 'User Settings Mode' and then 'Driver Assistance' on the LCD display. (For more information, refer to “LCD Display” on page 5-62.)

- The driver's attention level is displayed on the scale of 1 to 5. The lower the number is, the more inattentive the driver is.
- The number decreases when the driver does not take a break for a certain period of time.
- The number increases when the driver attentively drives for a certain period of time.
- When the driver turns on the function while driving, it displays ‘Last Break time’ and level reflected that.

Take a break

OJF058426LB

- The "Consider taking a break" message appears on the LCD display and a warning sounds in order to suggest the driver to take a break, when the driver's attention level is below 1.

- If the total driving time is less than 10 minutes, Driver Attention Warning does not suggest the driver taking a break. And the function does not repeat break suggestion within 10 minutes after sending warning message.

Resetting the function

- The last break time is set to 00:00 and the driver's attention level is set to 5 (very attentive) when the driver resets Driver Attention Warning.
- Driver Attention Warning resets in the following situations.
  - The engine is turned OFF.
  - The driver unfastens the seat belt and then opens the driver’s door.
  - Stop lasting more than 10 minutes.
- Driver Attention Warning operates again, when the driver restarts driving.

Driver Attention Warning standby

Driver Attention Warning enters the ready status and displays the 'Disabled' screen in the following situations.

- The front view camera sensor keeps failing to detect the lanes.
- Driving speed remains under 60 km/h or over 180 km/h (111 mph) (for Europe/Russia), 180 km/h (111 mph) (for Australia/Middle East).

Driver Attention Warning malfunction

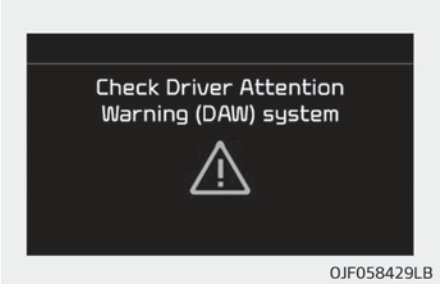

When the "Check Driver Attention Warning (DAW) system" warning message appears, the function is not working properly. In this case, have the vehicle checked by a professional workshop. Kia recommends to visit an authorized Kia dealer/service partner.

⚠ WARNING

- **Driver Attention Warning is not a substitute for safe driving practices, but a convenience function only. It is the responsibility of the driver to always drive cautiously to prevent unexpected and sudden situations from occurring. Pay attention to the road conditions at all times.**
- **It may suggest a break according to the driver's driving pattern or habits even if the driver doesn't feel fatigued.**
- **The driver, who feels fatigued, should take a break, even though there is no break suggestion by Driver Attention Warning.**

✻ NOTICE

Driver Attention Warning utilizes the front view camera on the front windshield for its operation. To keep

(Continued)

(Continued)

the front view camera in the best condition, you should observe the followings:

- Do not disassemble front view camera temporarily for tinted window or attaching any types of coatings and accessories. If you disassemble a camera and assemble it again, take your vehicle to a professional workshop and have the system checked. Kia recommends to visit an authorized Kia dealer/service partner.
- Do not locate any reflective objects (i.e. white paper, mirror) over the dashboard. Any light reflection may cause a malfunction of Driver Attention Warning (DAW).
- Pay extreme caution to keep the front view camera out of water.

(Continued)

(Continued)

- Do not arbitrarily disassemble the camera assembly, nor apply any impact on the front view camera assembly.
- Playing the vehicle audio system at high volume may offset Driver Attention Warning warning sounds.

⚠ CAUTION

Driver Attention Warning may not properly operate with limited alerting in the following situations:

- **The lane detection performance is limited. (For more information, refer to "Lane Keeping Assist (LKA) System" on page 6-62.)**
- **The vehicle is violently driven or is abruptly turned for obstacle avoidance (e.g. construction area, other vehicles, fallen objects, bumpy road).**

(Continued)

(Continued)

- **Forward drivability of the vehicle is severely undermined (possibly due to wide variation in tire pressures, uneven tire wear-out, toe-in/toe-out alignment).**
- **The vehicle drives on a curvy road.**
- **The vehicle drives on a bumpy road.**
- **The vehicle drives through a windy area.**
- **The vehicle is controlled by the following driver assistance functions:**
  - **Forward Collision-Avoidance Assist**
  - **Lane Keeping Assist**
  - **Smart Cruise Control**

Leading vehicle departure warning

This function reminds the driver the leading vehicle's driving departure after stopping.

Function setting and operating conditions

With the vehicle ON, the Leading vehicle departure warning function turns on and gets ready to be activated when the 'User Settings ➡ Driver Assistance ➡ Driver Attention Warning ➡ Leading vehicle departure alert' is selected on the cluster. The function stops operation when the setting is deactivated. However, if the vehicle is turned off then on again, the function maintains the previous state.

Function activation

If the driver does not take action for a certain period of time after the vehicle in front departs, the "Leading vehicle is driving away" message is displayed on the cluster.

⚠ WARNING

- **The function is a driver assistant device and it may not warn the driver even warn the leading vehicle's departure.**

(Continued)

(Continued)

- **Even the function warn the driver the leading vehicle's departure, always check the traffic condition by yourself before moving the vehicle.**

✻ NOTICE

The function may not warn or may not work properly when:

- A pedestrian or a bicycle is ahead
- A car cut in ahead.
- Meet a traffic jam during the curve or right turn driving.
- Busy road such as reducing lanes.
- Stopping at a shoulder, rest area or a parking lot.

CRUISE CONTROL (CC) (IF EQUIPPED)

■ Type A

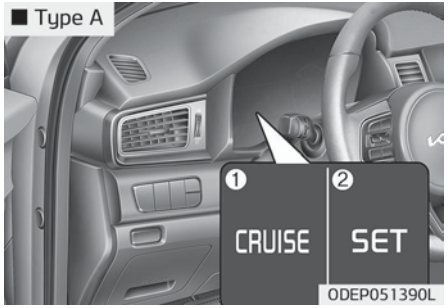

■ Type B

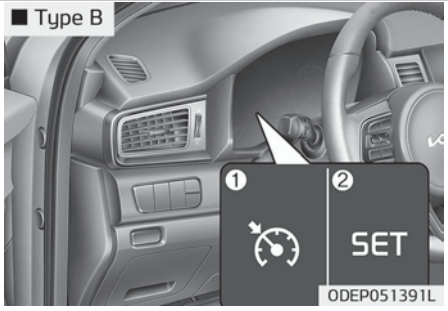

1. Cruise indicator
2. Cruise set indicator

Cruise Control allows you to program the vehicle to maintain a constant speed without pressing the accelerator pedal.

CC is designed to function above approximately 30 km/h (20 mph).

⚠ WARNING

- **If Cruise Control is left on, (cruise indicator light is illuminated), Cruise Control can be switched on accidentally. Keep Cruise Control off when Cruise Control is not in use, to avoid inadvertently setting a speed.**
- **Use Cruise Control only when traveling on open highways in good weather.**
- **Do not use Cruise Control when it may not be safe to keep the vehicle at a constant speed, for instance, driving in heavy or varying traffic, or on slippery (rainy, icy or snow-covered) or winding roads or over 6% uphill or down-hill roads.**
- **Pay particular attention to the driving conditions whenever using Cruise Control.**

(Continued)

(Continued)

- **Be careful when driving downhill using Cruise Control, which may increase the vehicle speed.**

✻ NOTICE

- During normal Cruise Control operation, when the SET switch is activated or reactivated after applying the brakes, Cruise Control will energize after approximately 3 seconds. This delay is normal.
- To activate Cruise Control, depress the brake pedal at least once after turning the ignition switch to the ON position or starting the engine. This is to check if the brake switch which is important part to cancel Cruise Control is in normal condition.

Driving Assist button

CRUISE / / MODE:	Turns Cruise Control on or off.
RES+:	Resumes or increases Cruise Control speed.
SET-:	Sets or decreases Cruise Control speed.
CANCEL / O:	Cancels cruise control operation.

To set Cruise Control speed:

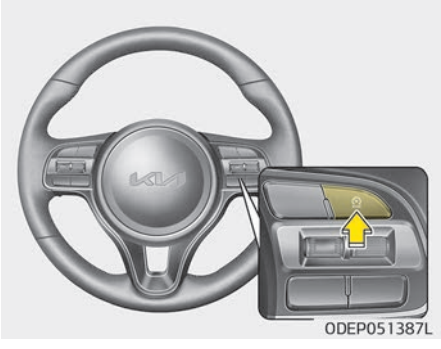

1. Press the Driving Assist button on the steering wheel, to turn the function on. The cruise indicator light will illuminate.
2. Accelerate to the desired speed, which must be more than approximately 30 km/h (20 mph).

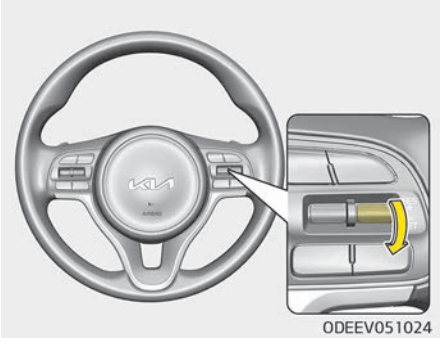

3. Move the switch down (to SET-), and release it at the desired speed. The cruise set indicator light will illuminate. Release the accelerator pedal at the same time. The desired speed will automatically be maintained.

   On a steep grade, the vehicle may slow down or speed up slightly while going downhill.

To increase Cruise Control set speed:

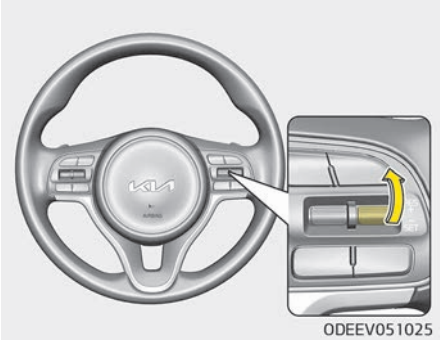

Follow either of these procedures:

- Move the switch up (to RES+) and hold it. Your vehicle will accelerate. Release the switch at the speed you want.
- Move the switch up (to RES+) and release it immediately. The cruising speed will increase by 1 km/h (or 1 mph) each time you move the switch up (to RES+) in this manner.

To decrease the cruising speed:

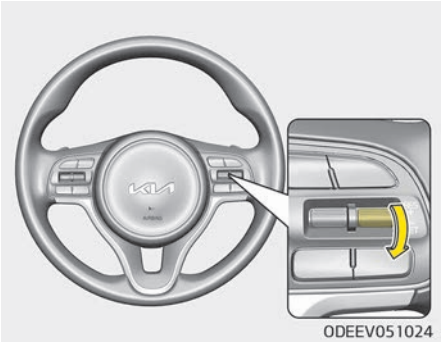

Follow either of these procedures:

- Move the switch down (to SET-) and hold it. Your vehicle will gradually slow down. Release the switch at the speed you want to maintain.
- Move the switch down (to SET-) and release it immediately. The cruising speed will decrease by 1 km/h (or 1 mph) each time you move the switch down (to SET-) in this manner.

To temporarily accelerate with Cruise Control on:

If you want to speed up temporarily when Cruise Control is on, depress the accelerator pedal. Increased speed will not interfere with Cruise Control operation or change the set speed.
To return to the set speed, take your foot off the accelerator pedal.

To cancel Cruise Control, do one of the following:

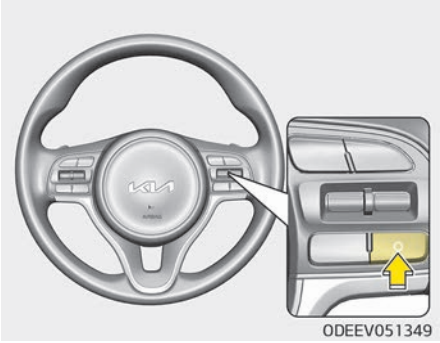

- Depress the brake pedal.
- Shift into N (Neutral) if equipped with an Dual clutch transmission.
- Press the CANCEL/O button located on the steering wheel.
- Decrease the vehicle speed lower than the memory speed by approximately 20 km/h (12 mph).
- Decrease the vehicle speed to less than approximately 25 km/h (15 mph).

Each of these actions will cancel Cruise Control operation (the cruise set indicator light will go off), but it will not turn the function off. If you wish to resume Cruise Control operation, move up the switch (to RES+) located on your steering wheel. You will return to your previously preset speed.

To resume cruising speed at more than approximately 30 km/h (20 mph)

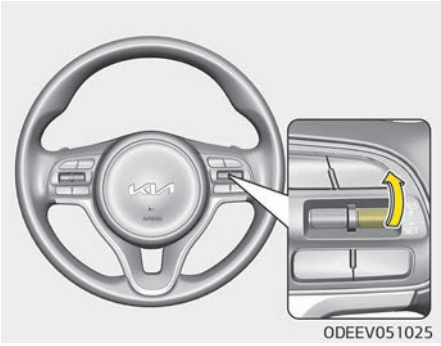

If any method other than the MODE button was used to cancel cruising speed and the function is still activated, the most recent set speed will automatically resume when the RES+ switch is pushed. It will not resume, however, if the vehicle speed has dropped below approximately 30 km/h (20 mph).

To turn Cruise Control off, do one of the following:

- Press the MODE button (the cruise indicator light will be turn off).
- If your vehicle equipped the speed limit, press the MODE button twice. (The cruise indicator light will be turn off.)
- Turn the ignition off.

Both of these actions cancel cruise control operation. If you want to resume cruise control operation, repeat the steps provided in "To set cruise control speed" on page 6-92.

SMART CRUISE CONTROL (SCC) (IF EQUIPPED)

1. Cruise indicator
2. Set speed
3. Vehicle distance

Smart Cruise Control allows you to program the vehicle to maintain constant speed and distance detecting the vehicle ahead without depressing the accelerator or brake pedal.

⚠ WARNING

For your safety, please read the owner's manual before using Smart Cruise Control.

✻ NOTICE

To activate Smart Cruise Control, depress the brake pedal at least once after turning the ENGINE START/STOP button switch to the ON position or starting the engine. This is to check if the brake switch which is important part to cancel Smart Cruise Control is in normal condition.

⚠ WARNING

- **If Smart Cruise Control is left on, (cruise indicator in the instrument cluster illuminated) Smart Cruise Control can be activated unintentionally. Keep Smart Cruise Control off (cruise indicator turn off) when Smart Cruise Control is not used.**
- **Use Smart Cruise Control only when traveling on open highways in good weather.**
- **Do not use Smart Cruise Control when it may not be safe to keep the car at a constant speed. For instance.**
  - **Highway interchange and tollgate**
  - **Road surrounded by abnormally multiple steel constructions (subway construction, steel tunnel, etc.)**
  - **Parking lot**
  - **Lanes beside guard rail on a road**

(Continued)

(Continued)

- **Slippery road with rain, ice, or snow covered**
- **Abrupt curved road**
- **Steep hills**
- **Windy roads**
- **Off roads**
- **Rods under construction**
- **Rumble strip**
- **The sensing ability decreases if the level of front and rear vehicle is changed from the factory.**

- **Pay particular attention to the driving conditions whenever using Smart Cruise Control.**
- **Smart Cruise Control is not a substitute for safe driving. It is the responsibility of the driver to always check the speed and distance of the vehicle ahead.**
- **Be careful when driving downhill using Smart Cruise Control.**

Speed setting

To set Smart Cruise Control Speed:

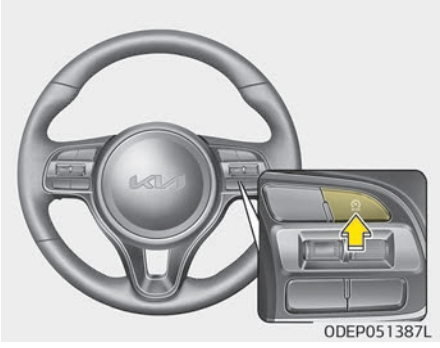

1. Press the Driving Assist button, to turn the function on. The CRUISE indicator in the instrument cluster will illuminate.
2. Accelerate to the desired speed. Smart Cruise Control Speed can be set as follows:
   - 10 km/h (5 mph)~180 km/h (110 mph) : when there is no vehicle in front
   - 0 km/h (0 mph)~180 km/h (110 mph) : when there is a vehicle in front

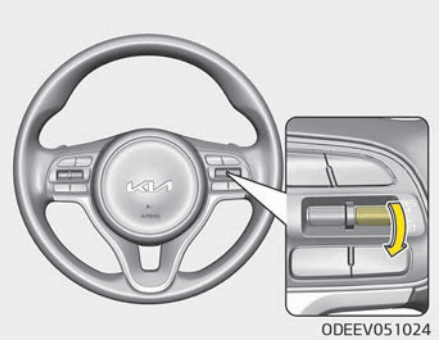

3. Move the switch down (to SET-), and release it at the desired speed. The set speed and Vehicle distance on the LCD screen will illuminate.
4. Release the accelerator pedal. The desired speed will automatically be maintained.

If there is a vehicle in front of you, the speed may decrease to maintain the distance to the vehicle ahead.
On a steep grade, the vehicle may slow down or speed up slightly while going uphill or downhill.

To increase Smart Cruise Control set speed

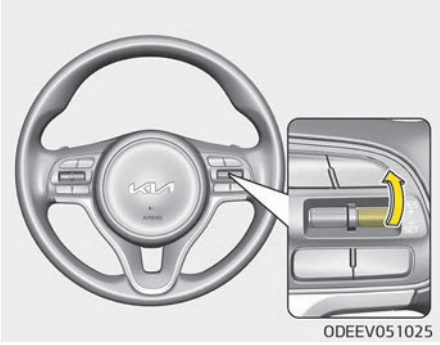

Follow either of these procedures:

- Move the switch up (to RES+), and hold it. Your vehicle set speed will increase by 10 km/h (5 mph). Release the switch at the speed you want.
- Move the switch up (to RES+), and release it immediately. The cruising speed will increase by 1.0 km/h (1.0 mph) each time you move the switch up (to RES+) in this manner.
- You can set the speed to 180 km/h (110 mph).

To decrease Smart Cruise Control set speed

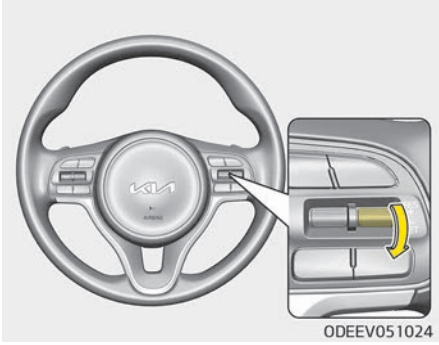

Follow either of these procedures:

- Move the switch down (to SET-), and hold it. Your vehicle set speed will decrease by 10 km/h (5 mph). Release the switch at the speed you want.
- Move the switch down (to SET-), and release it immediately. The cruising speed will decrease by 1.0 km/h (1.0 mph) each time you move the switch down (to SET-) in this manner.
- You can set the speed to 30 km/h (20 mph).

To temporarily accelerate with Smart Cruise Control on

If you want to speed up temporarily when Smart Cruise Control is on, depress the accelerator pedal. Increased speed will not interfere with Smart Cruise Control operation or change the set speed.
To return to the set speed, take your foot off the accelerator.
If you move the switch down (to SET-) at increased speed, the cruising speed will be set again.

✻ NOTICE

Be careful when accelerating temporarily, because the speed is not controlled automatically at this time even if there is a vehicle in front of you.

Smart Cruise Control will be temporarily canceled when:

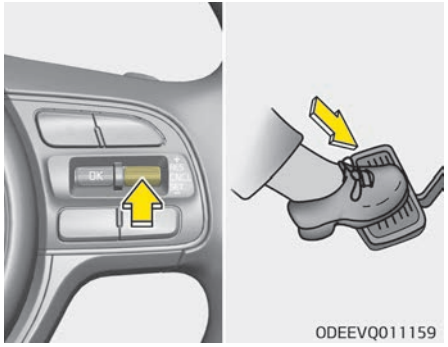

Canceled manually

Smart Cruise Control is temporarily canceled when the brake pedal is depressed or the CANCEL button is pressed. The speed and vehicle distance indicator on the cluster is disappeared and the CRUISE indicator is illuminated continuously.

Canceled automatically

- The driver's door is opened.
- The shift switch is shifted to N (Neutral), R (Reverse) or P (Parking).
- The EPB (Electronic Parking Brake) is applied.
- The vehicle speed is over 190 km/h (120 mph).
- The ESC, ABS or TCS is operating.
- The ESC is turned off.
- The sensor or the cover is dirty or blocked with foreign matter.
- The accelerator pedal is continuously depressed for long time.
- The engine speed is in dangerous range.
- Smart Cruise Control has malfunctioned.
- When the vehicle is stopped for over 5 minutes.
- The driver starts driving by pushing the switch up (RES+)/down (SET-) or depressing the accelerator pedal, after stopping the vehicle with a vehicle stopped far away in front.
- The driver starts driving by pushing the switch up (RES+)/down (SET-) or depressing the accelerator pedal, after the vehicle is stopped by Smart Cruise Control with no other vehicle ahead.
- When the braking control is operated for Forward Collision-Avoidance Assist
- The vehicle stops and goes repeatedly for a long period of time.
- When the parking brake is locked
- Speed of the vehicle has been decreased to less than 10 km/h
- Engine has some problems.

⚠ CAUTION

If Smart Cruise Control is cancelled by other than the reasons mentioned, have the system checked by a professional workshop. Kia recommends to visit an authorized Kia dealer/service partner.

⚠ CAUTION

If the function is automatically cancelled, the warning chime will sound and a message ("Smart Cruise Control canceled") will appear for a few seconds.

(Continued)

(Continued)

You must adjust the vehicle speed by depressing the accelerator or brake pedal according to the road condition ahead and driving condition.
Always check the road conditions. Do not rely on the warning chime.

To resume Smart Cruise Control

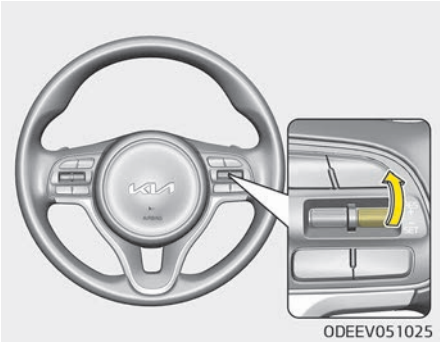

If any method other than the switch was used to cancel cruising speed and the function is still activated, the cruising speed will automatically resume when you move the switch up (to RES +).

If you move the switch up (to RES+), the speed will resume to the recently set speed. However, if vehicle speed drops below 10 km/h (5 mph), it will resume when there is a vehicle in front of your vehicle.

✻ NOTICE

To reduce the risk of an accident, always check the road conditions when reactivating Smart Cruise Control using the RES+ switch to ensure the road conditions permit safe use of Smart Cruise Control.

To turn Smart Cruise Control off:

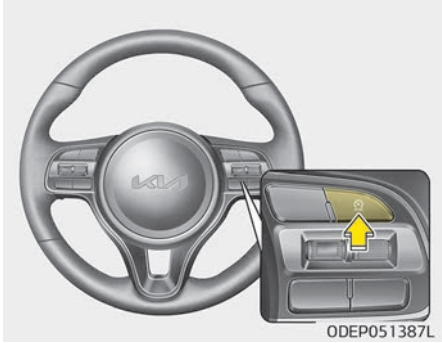

Press the Driving Assist button. (the CRUISE indicator in the instrument cluster will go off).

Vehicle distance setting

To set vehicle distance:

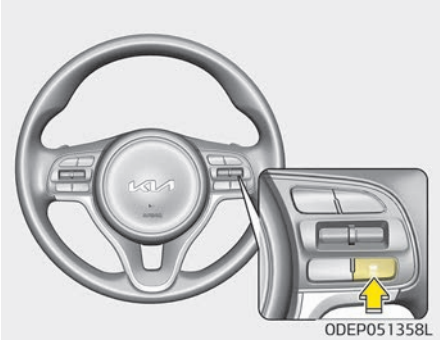

This function allows you to program the vehicle to maintain relative distance to the vehicle ahead without depressing the accelerator pedal or brake pedal.
The Vehicle Distance will automatically activate when Smart Cruise Control is on.
Select the appropriate distance according to road conditions and vehicle speed.
Each time the button is pressed, the Vehicle Distance changes as follows:

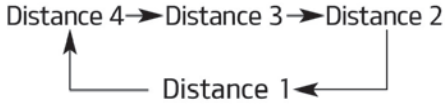

For example, if you drive at 90 km/h (56 mph), the distance maintain as follows;
Distance 4 - approximately 52.5 m
Distance 3 - approximately 40 m
Distance 2 - approximately 32.5 m
Distance 1 - approximately 25 m

✻ NOTICE

The level of distance between vehicles will be set to the level designated by the driver. (Last mode save feature)

✻ NOTICE

The 'Distance 4' is always set when the function is used for the first time after starting the engine.

(Continued)

(Continued)

Smart Cruise Control remember the last vehicle distance which the driver used in the vehicle with Forward Collision-Avoidance Assist.

When the lane ahead is clear :

The vehicle speed will maintain the set speed.

When there is a vehicle ahead of you in your lane:

ODEP059080

ODEP059082

ODEP059081

ODEP059083

- The vehicle will maintain the set speed, when the lane ahead is clear.
- The vehicle will slow down or speed up to maintain the selected distance, when there is a vehicle ahead of you in the lane. (A vehicle will appear in front of your vehicle in the LCD display only when there is an actual vehicle in front of you)
- If the vehicle ahead speeds up, your vehicle will travel at a steady cruising speed after accelerating to the selected speed.

Collision warning

OJF058389L

If there is a high risk of collision due to sudden braking of the front vehicle or lack of safety distance with the vehicle ahead during Smart Cruise Control driving, so that if the driver's brake or steering wheel operation is required, the Distance Step with the vehicle ahead will blink on the cluster and a collision warning will sound.
In this case, immediately reduce the speed.

⚠ CAUTION

- **Even if the warning message does not appear and warning chime does not sound, always pay attention to driving conditions to prevent dangerous situations from occurring.**
- **Playing the vehicle audio system at high volume may cause the occupants to not hear the system warning sounds.**
- **If the vehicle cannot keep the enough set distance, the warning will sound and blink on the cluster. If a warning sounds, check the nearby traffic condition and if necessary, control the speed by depressing the brake. Always pay attention in case of danger, even if there are no warning sound.**

⚠ WARNING

- **If the speed of the vehicle ahead is similar to or faster than your vehicle, the function may not warn you as you do not maintain enough set distance. Always pay attention in case of danger, even if there is no warning sound.**
- **If the speed of the vehicle ahead is too slow, the function may not warn you as you do not maintain enough set distance. Always pay attention in case of danger, even if there is no warning sound.**
- **If you set Smart Cruise Control speed and depress the accelerator pedal, the function may not warn you as you do not maintain enough set distance. Always pay attention in case of danger, even if there is no warning sound.**

⚠ CAUTION

ODEP059084L

If the vehicle ahead (vehicle speed: less than 30 km/h (20 mph) disappears to the next lane, the warning chime will sound and a message will appear. Adjust your vehicle speed for vehicles or objects that can suddenly appear in front of you by depressing the brake pedal according to the road condition ahead and driving condition.

In traffic situation

OJF058402L

Use switch or pedal to accelerate

- In traffic, your vehicle will stop if the vehicle ahead of you stops. Also, if the vehicle ahead of you starts moving, your vehicle will start as well. However, if the vehicle stops you must depress the accelerator pedal or push up the switch (RES+) to start driving.
- If you push Smart Cruise Control switch (RES+ or SET-) while Auto Hold and Smart Cruise Control is operating the Auto Hold will be released regardless of accelerator pedal operation and the vehicle will start to move. The AUTO HOLD indicator changes from green to white. (if equipped with EPB (Electronic Parking Brake))

Detecting Sensor (Front View Camera)

Front view camera is a sensor for detecting lanes and the front vehicles. If the sensor is covered with dirt, snow or other foreign matter, the sensor's detection performance will be degraded and Smart Cruise Control will be temporarily cancelled so that it does not properly work until it recover.
Always keep the area in front of the sensor clean.
For more information of front view camera, refer to "Lane Keeping Assist (LKA)" on page 6-62.

Detecting Sensor (Front Radar)

The sensor detects the distance to the vehicle ahead.
If the sensor is covered with dirt or other foreign matter, the vehicle distance control may not operate correctly.
Always keep the area in front of the sensor clean.

Warning message

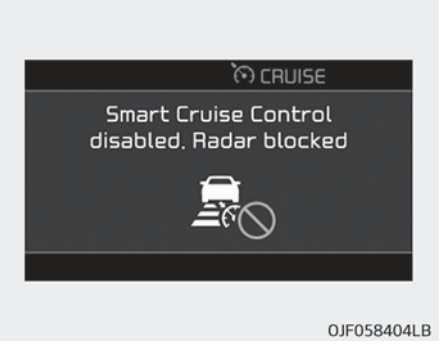

When the sensor lens cover is blocked with dirt, snow, or debris, Smart Cruise Control operation may stop temporarily. If this occurs, a warning message will appear on the LCD display. Remove any dirt, snow, or debris and clean the radar sensor lens cover before operating Smart Cruise Control. Smart Cruise Control may not properly activate, if the front radar is totally contaminated, or if any substance is not detected after turning ON the engine (e.g. in an open terrain).

Smart Cruise Control malfunction message

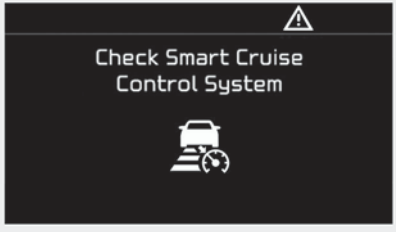

OJF058406LB

The message will appear when the vehicle distance control is not functioning normally.
In this case, have the system checked by a professional workshop. Kia recommends to visit an authorized Kia dealer/service partner.

⚠ CAUTION

- **Do not install accessories around the sensor and do not replace the bumper by yourself. It may interfere with the sensor performance.**
- **Always keep the sensor and bumper clean.**
- **Use only a soft cloth to wash the vehicle. Do not spray pressurized water directly on the sensor or sensor cover.**
- **Be careful not to apply unnecessary force on the front radar sensor or sensor cover. If the sensor is forcibly moved out of proper alignment, Smart Cruise Control may not operate correctly. In this case, a warning message may not be displayed. Have the vehicle inspected by a professional workshop. Kia recommends to visit an authorized Kia dealer/service partner.**

(Continued)

(Continued)

- **Do not damage the sensor or sensor area by a strong impact. If the sensor moves slightly off position, Smart Cruise Control will not operate correctly without any warning or indicator from the cluster. If this occurs, have the system checked by a professional workshop.**
  Kia recommends to visit an authorized Kia dealer/service partner.
- **Use only a genuine Kia sensor cover for your vehicle. Do not paint anything on the sensor cover.**
- **If the front bumper becomes damaged in the area around the radar sensor, Smart Cruise Control may not operate properly.**

Set Smart Cruise Control Reaction

The sensitivity of vehicle speed when following the front vehicle to maintain the set distance can be adjusted. Go to the User Settings Mode (Driver Assistance) and select Smart Cruise Control Reaction. You may select one of the three stages you prefer.

- Slow:
  Vehicle speed following the front vehicle to maintain the set distance is slower than normal speed.
- Normal:
  Vehicle speed following the front vehicle to maintain the set distance is normal.
- Fast:
  Vehicle speed following the front vehicle to maintain the set distance is faster than normal speed.

✻ NOTICE

The last selected mode remains in the function.

To convert to Cruise Control mode:

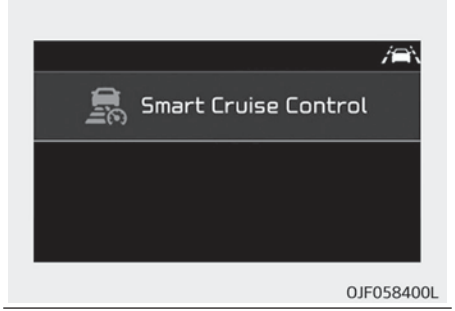

OJF058400L

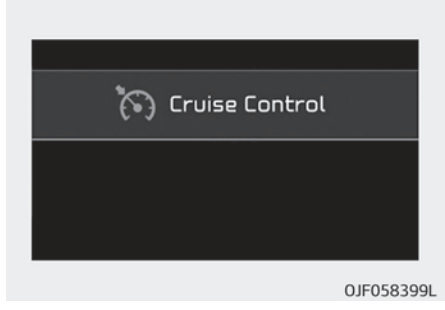

OJF058399L

The driver may choose to only use Smart Cruise Control mode (speed control function) by doing as follows:

1. Turn Smart Cruise Control on (the cruise indicator light will be on but the function will not be activated).
2. Push the distance to distance switch for more than 2 seconds.
3. Choose between "Smart Cruise Control" and "Cruise Control".

When the function is canceled using the Driving Assist button or the Driving Assist button is used after the engine is turned on, the Smart Cruise Control mode will turn on.

⚠ WARNING

When using Smart Cruise Control mode, you must manually adjust the distance to other vehicles as the function will not automatically brake to slow down for other vehicles.

Limitations of Smart Cruise Control

Smart Cruise Control may have limits to its ability to detect distance to the vehicle ahead due to road and traffic conditions.

Driving on a curved road

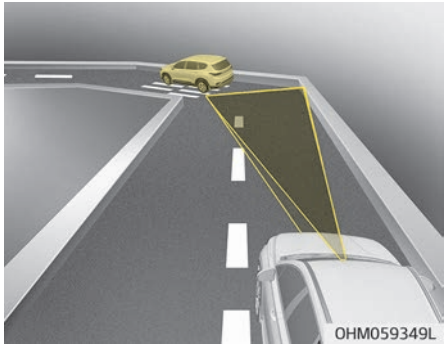

- On curves, Smart Cruise Control may not detect a moving vehicle in your lane, and then your vehicle could accelerate to the set speed. Also, the vehicle speed will rapidly down when the vehicle ahead is recognized suddenly.
- Select the appropriate set speed on curves and adjust your vehicle speed by depressing the accelerator or brake pedal according to the road condition ahead and driving condition.

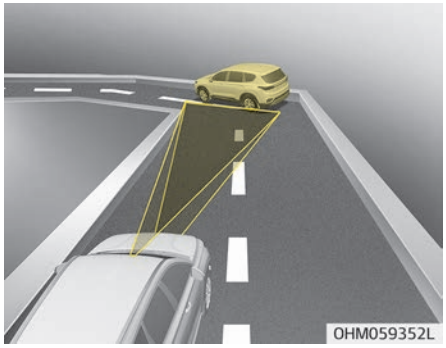

- Your vehicle speed can be reduced due to a vehicle in the adjacent lane. Adjust your vehicle speed by depressing the brake pedal according to the road condition ahead and driving condition. Apply the accelerator pedal and select the appropriate set speed. Check to be sure that the road conditions permit safe operation of Smart Cruise Control.

Driving on a sloped road

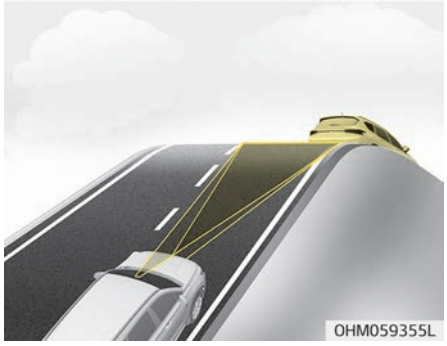

- During uphill or downhill driving, Smart Cruise Control may not detect a moving vehicle in your lane, and cause your vehicle to accelerate to the set speed. Also, the vehicle speed will rapidly down when the vehicle ahead is recognized suddenly.
- Select the appropriate set speed on inclines and adjust your vehicle speed by depressing the accelerator or brake pedal according to the road condition ahead and driving condition.

Changing lanes

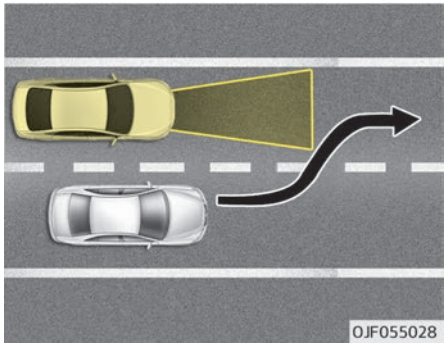

- A vehicle which moves into your lane from an adjacent lane cannot be recognized by the sensor until it is in the sensor's detection range.
- The sensor may not detect immediately when a vehicle cuts in suddenly. Always pay attention to the traffic, road and driving conditions.
- If a vehicle which moves into your lane is slower than your vehicle, your speed may decrease to maintain the distance to the vehicle ahead.
- If a vehicle which moves into your lane is faster than your vehicle, your vehicle will accelerate to the selected speed.

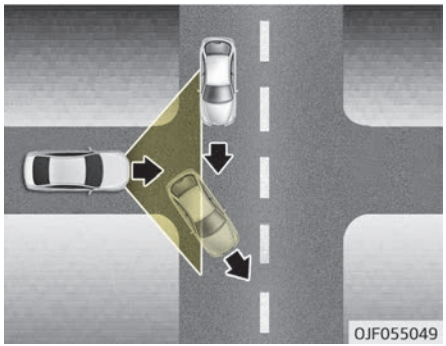

- Your vehicle may accelerate when a vehicle ahead of you disappears.
- When you are warned that the vehicle ahead of you is not detected, drive with caution.

Recognizing the vehicle

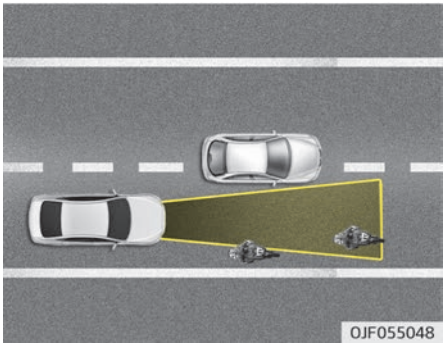

Some vehicles ahead in your lane cannot be recognized by the sensor as follows:

- Narrow vehicles such as motorcycles or bicycles
- Vehicles offset to one side
- Slow-moving vehicles or sudden-decelerating vehicles
- Stopped vehicles
- Vehicles with small rear profile such as trailers with no loads

A vehicle ahead cannot be recognized correctly by the sensor if any of following occurs:

- When the vehicle is pointing upwards due to overloading in the trunk (tailgate)
- While making turns by steering
- When driving to one side of the lane
- When driving on narrow lanes or on curves

Adjust your vehicle speed by depressing the brake pedal according to the road condition ahead and driving condition.

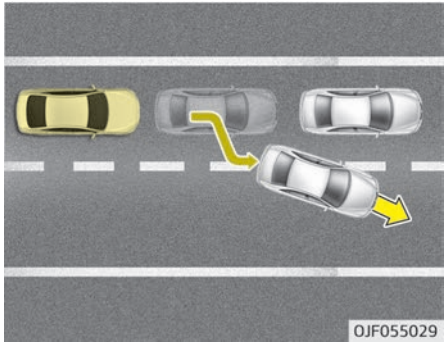

- When vehicles are at a standstill and the vehicle in front of you changes to the next lane, be careful when your vehicle starts to move because it may not recognize the stopped vehicle in front of you.

In this case, you must maintain a safe braking distance, and if necessary, depress the brake pedal to reduce your driving speed in order to maintain a safe distance.

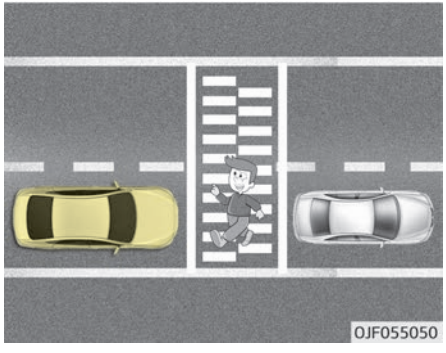

- Always look out for pedestrians when your vehicle is maintaining a distance with the vehicle ahead.

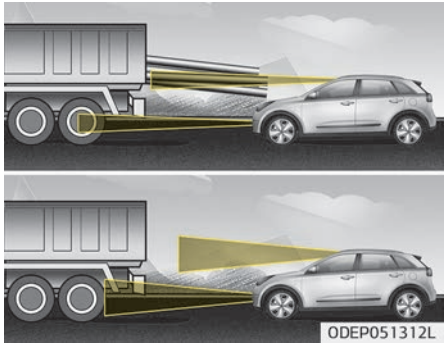

- Always be cautious for vehicles with higher height or vehicles carrying loads that sticks out to the back of the vehicle.

⚠ WARNING

When using Smart Cruise Control take the following precautions:

- **If an emergency stop is necessary, you must apply the brakes. The vehicle cannot be stopped at every emergency situation by using Smart Cruise Control.**

(Continued)

(Continued)

- **Keep a safe distance according to road conditions and vehicle speed. If the vehicle distance is too close during a high-speed driving, a serious collision may result.**
- **Always maintain sufficient braking distance and decelerate your vehicle by applying the brakes if necessary.**
- **Smart Cruise Control is not a substitute for safe driving, but a convenience function only. The safety and control of the vehicle must be determined by the driver your-self.**
- **For your safety, please read the owner's manual before using Smart Cruise Control.**
- **Smart Cruise Control cannot recognize a stopped vehicle, pedestrians or an oncoming vehicle. Always look ahead cautiously to pre-vent unexpected and sudden situations from occurring.**

(Continued)

(Continued)

- **Vehicles moving in front of you with a frequent lane change may cause a delay in the function's reaction or may cause the function to react to a vehicle actually in an adjacent lane. Always drive cautiously to prevent unexpected and sudden situations from occurring.**
- **Always be aware of the selected speed and vehicle distance.**
- **Smart Cruise Control may not recognize complex driving situations so always pay attention to driving conditions and control your vehicle speed.**
- **For safe operation, carefully read and follow the instructions in this manual before use.**
- **Do not use Smart Cruise Control on steep inclines or when towing another vehicle or trailer since such extreme loading can interfere with your vehicle's ability to maintain the selected speed.**
- **Do not use Smart Cruise Control when the vehicle is towed.**

✻ NOTICE

Smart Cruise Control may not operate temporarily due to:

- Electrical interference.
- Modifying the suspension.
- Differences of tire abrasion or tire pressure.
- Installing different type of tires.

LANE FOLLOWING ASSIST (LFA) (IF EQUIPPED)

Lane Following Assist is designed to center the vehicle in the chosen lane by using a Front view camera on top of the windshield.
It can only become active in combination with Smart Cruise Control and therefore assists the driver in his task to control the lateral movement of the vehicle.

❊ LFA stands for Lane Following Assist.

⚠ WARNING

- **It is the driver's responsibility to operate the steering wheel for safe driving.**
- **Do not turn the steering wheel hastily if Lane Following Assist is in work.**
- **Lane Following Assist assists the steering wheel control over the direction so that the vehicle can stay in the center of the lane. Lane Following Assist does not automatically control the steering wheel of at all times, which means the driver must not hands off the wheel while driving.**
- **When using Lane Following Assist, always be aware of your surroundings and road conditions that may interrupt or stop Lane Following Assist.**

⚠ CAUTION

- **Do not attach glass tinting, stickers, accessories to the windshield where the front camera near the indoor mirror is placed.**
- **The removal or re-assembly of the Front view camera to attach tinting, stickers, accessories may require Lane Following Assist to be thoroughly inspected and modified. In such case, Kia recommend that you have your vehicle inspected by an authorized Kia dealer/service partner.**
- **Inspection or modification may be required when replacing parts related to the windshield or Front view camera, steering. have the system checked by a professional workshop. Kia recommends to visit an authorized Kia dealer/ service partner.**

(Continued)

(Continued)

- **Depending on your surroundings and road conditions, Lane Following Assist could fail to recognize the lane and stop working. In turn, extra caution is required while driving with Lane Following Assist on.**
- **Be sure to check the non-operating conditions and cautions for the driver before using Lane Following Assist.**
- **Do not place reflective materials such as white paper or mirror on the crash pad. Sunlight reflections can cause a malfunction in Lane Following Assist.**
- **Too big sound from the sound function can interrupt the alarming sound from Lane Following Assist.**

(Continued)

(Continued)

- **Keeping your hands off the wheel while driving will trigger the hands-off warning and deactivate the steering-assist. Put your hands back on the wheel, then the steering-assist will be re-activated.**
- **When driving at a high speed, the steering assist force can become weak and the vehicle can drive out of its lane. Extra caution is required, and comply with the speed limit.**
- **Attaching an object to the steering wheel could deter steering assistance.**
- **Attaching an object to the steering wheel could deter the hands-off alarming system.**

Lane Following Assist operation

To use Lane Following Assist two steps are necessary:

1. Lane Following Assist has to be enabled, and
2. Smart Cruise Control has to be activated

With the ENGINE START/STOP button [ON], select or release the setting from "User setting ➡ Driver Assistance ➡ Driving assist ➡ Lane Following Assist". Select Lane Following Assist in the user setting of the instrument panel.

- Press the Lane Driving Assist button (/⊘\) located on the steering wheel to turn on Lane Following Assist.

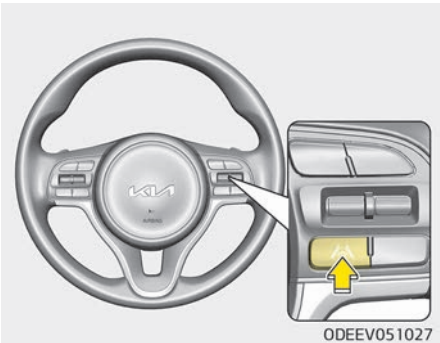

Lane Following Assist status is remembered by the function and therefore does not need to be enabled again for each new journey.

Lane Following Assist activation

If the vehicle is inside the lane with both lanes recognized by the function, and there is no steep steering made by the driver, Lane Following Assist changes into steering assist mode. The indicator light will come on green, and the function helps the vehicle stay in line by controlling the steering wheel.
When the steering wheel is not controlled temporarily, the indicator light will flash green and changes to white.
When the both lanes are not recognized by the function, the function controls the steering wheel limitedly whether there is a vehicle in front or not.

⚠ WARNING

Lane Following Assist ensures the vehicle stays in its lane. Lane Following Assist does not guarantee 100% safety. Make sure you make decisions on the road after checking the road conditions and safety matters while driving. Never completely rely on your Lane Following Assist.

Warning

Keep hands on steering wheel

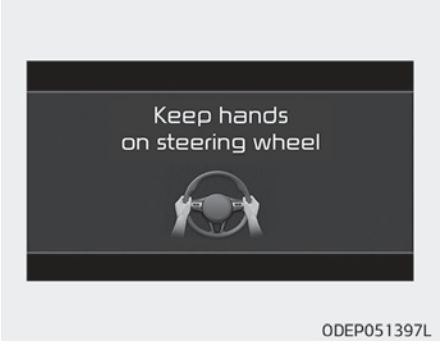

If you keep your hands off the wheel while driving with Lane Following Assist assisting the steering, the hands-off warning will be triggered.

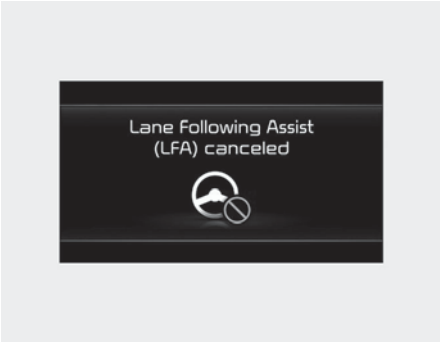

If the driver still does not have their hands on the steering wheel after the hands-off warning, the 'Lane Following Assist (Lane Following Assist) canceled' warning message will appear and Lane Following Assist will be automatically canceled.

⚠ CAUTION

- **Hands-off warnings may be delayed depending on road conditions. Always keep your hands on the steering wheel while driving.**
- **Hold the steering wheel tight. Otherwise, Lane Following Assist could misjudge that the driver hands off the wheel, and a hands-off warning may occur.**

Lane Following Assist malfunction

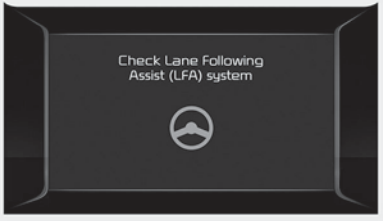

ODEP059265L

The warning message popped up (turned off after a certain period of time)means a problem with Lane Following Assist . In this case, have the system checked by a professional workshop. Kia recommends to visit an authorized Kia dealer/service partner.

⚠ CAUTION

- **It is the driver's responsibility to operate the steering wheel while driving.**
- **With Lane Following Assist on, the driver can steer the vehicle by operating the wheel on his own.**
- **We recommend that the driver turns off Lane Following Assist and operates the steering wheel by himself in the following cases**
  - **bad weather**
  - **bad road conditions**
  - **when frequent operation of the steering wheel is required**
  - **when towing other vehicle or trailers**
- **The steering wheel can feel heavy or light if Lane Following Assist is assisting the steering.**

Limitation of Lane Following Assist

- If the driver turns on the turn signal light or the emergency warning light to change the lane
  - Operate the turn signal light switch before changing the lane
  - If you change the lane without operating the turn signal lights, steering reaction force of the wheel may occur.
- Once Lane Following Assist is turned on or the lane is changed, the vehicle should be in the center of the road to switch to the steering assist mode. If the driver keeps driving along the lane, Lane Following Assist will not assist the steering.
- When the ESC or VSM is activated, the function does not assist steering.
- When driving on a curved road at a high speed, steering assist mode may not work.
- When driving at a speed faster than 180 km/h (111 mph), steering assist mode may not work.
- When sudden steering is made, the function could be temporarily deactivated.
- If you change the lane in a hurry, the function does not assist the steering.
- If the vehicle suddenly stops, it does not assist the steering.
- If the lane is too narrow or too wide, steering is not assisted.
- If the function is not able to recognize a vehicle in front and either of the lanes is not recognized, the steering is not assisted.
- If the radius is too small for the curve.

Cautions for the driver

If the lane recognition is difficult or limited for Lane Following Assist as shown below, the driver may need to be careful because it may not operate or may cause unnecessary operation.

- **Roads or lane markings in bad condition**
  - When The lane is tainted or invisible
  - When the driver cannot see the lane due to rain, snow, dust, sand, oil, puddles, etc
  - When roads are set or the colors of the lane and road are not distinctive
  - If there is a sign other than the lane near the lane or a mark similar to the lane
  - When the lane is not clear or damaged
  - If the road is covered in the shadows of objects around the road, such as medians, guard rails, noise walls, and trees
  - If the number of lanes increases or decreases, or if the lanes intersect with each other more intensely (tollgate entry section, road section / joining section, etc.)
  - When there are two or more lane markings such as a construction section, a designated lane, etc.
  - When the lane is crowded such as the construction section or the lane is replaced by some structures
  - If there is a road marking such as a zigzag lane, crosswalk mark, or road surface milestone
  - When a lane suddenly becomes invisible or disappears from an intersection
- **The external environment affecting the function**

- If the outside brightness of the vehicle suddenly changes, such as when entering or exiting the tunnel or passing under the bridge
- If the vehicle's headlights are not used at night or in the tunnel, or the brightness of the headlights is too weak
- If there are boundary structures such as tollgate booths and sidewalk blocks
- If it is difficult to distinguish lanes due to the reflection on the wet road made by sunlight, streetlight, and oncoming traffic.
- When the backlight is strongly reflected in the direction of the vehicle
- When Driving to the left or right lane by bus lane or on the bus lane
- If there is no enough distance between the front car or if the lane is covered by the car ahead of me
- When the lane change is large, such as a steep curve or a continuous curve
- When passing through speed bump, sudden up / down or left / right slope
- If the vehicle is severely shaken
- When the temperature around the mirror is very high due to direct sunlight

• **When the Front view camera has poor visibility**

- If the windshield of the vehicle and the camera lens are covered with dust, fingerprints, or tinting.
- If the camera has poor visibility due to bad weather such as fog, heavy rain, heavy snow.
- If moisture is not completely removed from the windscreen.
- When placing objects on the dashboard, etc.

REAR CROSS-TRAFFIC COLLISION WARNING (RCCW) (IF EQUIPPED)

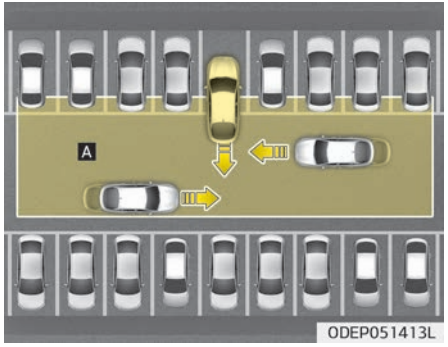

[A] : Rear Cross-Traffic Collision Warning operating range

Rear Cross-Traffic Collision Warning uses radar sensors to monitor the approaching cross traffic from the left and right side of the vehicle when your vehicle is in reverse.
The blind spot detection range varies relative to the approaching vehicle speed.

⚠ WARNING

- **Always be aware of road conditions while driving and be warn for unexpected situations even though Rear Cross-Traffic Collision Warning is operating.**
- **Rear Cross-Traffic Collision Warning is supplemental function to assist you. Do not entirely rely on the functions. Always pay attention, while driving, for your safety.**
- **Rear Cross-Traffic Collision Warning is not substitutes for proper and safe driving. Always drive safely and use caution when backing up the vehicle.**

Rear Cross-Traffic Collision Warning setting and activation

Rear Cross-Traffic Collision Warning setting

- The driver can activate the function by placing the START/STOP button to the ON position and by selecting 'User Settings ➡ Driver Assistance ➡ Warning timing ➡ Rear cross-traffic safety'. Rear Cross-Traffic Collision Warning turn on and get activated.
- When the vehicle is turned off then on again, the functions always get ready to be activated.
- When the function is initially turned on and when the vehicle is turned off then on again, the warning light will illuminate for 3 seconds on the outside rearview mirror.

The driver can select the initial warning activation time in the Cluster by selecting "User Settings ➡ Driver assistance ➡ Warning timing". The options for the initial Rear Cross-Traffic Collision Warning includes the following:

- Normal:
  When this condition is selected, the initial Rear Cross-Traffic Collision Warning is activated normally. If this setting feels too sensitive change the option to 'Later'.
  The warning activation time may feel late if the side/rear vehicle abruptly accelerates.
- Later:
  Select this warning activation time when the traffic is light and you are driving in a low speed. However, if you change the warning activation time, the warning activation time of vehicle's other function may also change. Check the warning activation time before changing it.

Operating conditions

The function will activate when vehicle speed is below 10 km/h (7 mph) and with the shift lever in R (Reverse).

- The function will not activate when the vehicle speed exceeds 10 km/h (7 mph). The function will activate again when the speed is below 8 km/h (5 mph).

The function's detecting range is approximately 0.5~20 m (0~82 ft.) An approaching vehicle will be detected if their vehicle speed is within 8 km/h ~ 36 km/h (5 ~ 22.5 mph)
Note that the detecting range may vary under certain conditions. As always, use caution and pay close attention to your surroundings when backing up your vehicle.

Warning

If the vehicle detected by the sensors approaches from the rear left/right side of your vehicle, the warning chime will sound, the warning light on the outside rearview mirror will blink and a message will appear on the LCD display. If the rear view monitor is in activation, a message will also appear on the 'Infortainment System'.
The warning will stop when:

- The vehicle moving at the rear left/right side of your vehicle is not in the detection range.
- The vehicle is right behind your vehicle.
- The vehicle is not driving towards your vehicle.
- The vehicle's approaching speed is decreased.

⚠ CAUTION

- **When the operation condition of Rear Cross-Traffic Collision Warning is met, the warning will occur every time a vehicle approaches the side or rear of your stopped (0 km/h (0 mph)) vehicle speed) vehicle.**

(Continued)

(Continued)

- **The function's warning or brake may not operate properly if the left or right of your vehicle's rear bumper is blocked by a vehicle or obstacle.**
- **The driver should always use extreme caution while operating the vehicle, whether or not the warning light on the outer side view mirror illuminates or there is a warning alarm.**
- **Playing the vehicle audio system at high volume may prevent occupants from hearing the function's warning sounds.**
- **If any other warning sound such as seat belt warning chime is already generated, Rear Cross-Traffic Collision Warning warning may not sound.**

⚠ WARNING

- **Drive safely even though the vehicle is equipped with a Rear Cross-Traffic Collision Warning. Do not solely rely on the function but check your surrounding when backing the vehicle up.**
- **The driver is responsible for accurate brake control.**
- **Always pay extreme caution while driving. Rear Cross-Traffic Collision Warning may not operate properly or unnecessarily operate depending on traffic and driving conditions.**

Detecting sensor

The rear corner radars are located inside the rear bumper for detecting the side and rear areas.
Always keep the rear bumper clean for proper operation of the function.

⚠ CAUTION

- **The function may not work properly when the bumper has been damaged, or if the rear bumper has been replaced or repaired.**

(Continued)

(Continued)

- **The function may turn off due to strong electromagnetic waves.**
- **Always keep the sensors clean.**
- **Never arbitrarily disassemble the sensor component nor apply any impact on the sensor component.**
- **Be careful not to apply unnecessary force on the radar sensor or sensor cover. If the sensor is forcibly moved out of proper alignment, the function may not operate correctly. In this case, a warning message may not be displayed.**
  Take your vehicle to a professional workshop and have the system checked. Kia recommends to visit an authorized Kia dealer/service partner.
- **Do not apply foreign objects such as a bumper sticker or a bumper guard near the radar sensor or apply paint to the sensor area. Doing so may adversely affect the performance of the sensor.**

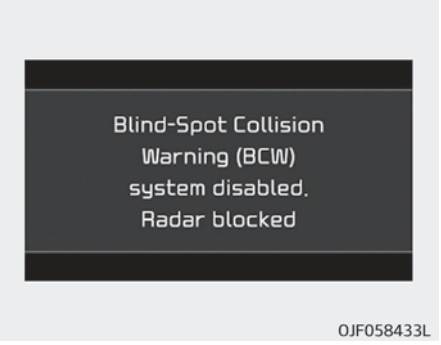

Blind-Spot Collision Warning system disabled. Radar blocked

- This warning message may appear when:
  - One or both of the sensors on the rear bumper is blocked by dirt or snow or a foreign object.
  - Driving in rural areas where the sensor does not detect another vehicle for an extended period of time.
  - When there is inclement weather such as heavy snow or rain.

A trailer or carrier is installed. (To use Blind-Spot Collision Warning, remove the trailer or carrier from your vehicle.)
If any of these conditions occur, the light on Blind-Spot Safety button and the function will turn off automatically.
When Blind-Spot Collision Warning canceled warning message is displayed in the cluster, check to make sure that the rear bumper is free from any dirt or snow in the areas where the sensor is located. Remove any dirt, snow, or foreign material that could interfere with the radar sensors.
After any dirt or debris is removed, Blind-Spot Collision Warning should operate normally after about 10 minutes of driving the vehicle.
If the function still does not operate normally, have the system inspected by a professional workshop. Kia recommends to visit by an authorized Kia dealer/service partner.

If there is a problem with Blind-Spot Collision Warning, a warning message will appear and the light on the switch will turn off. The function will turn off automatically.
In this case, have the system checked by a professional workshop. Kia recommends to visit an authorized Kia dealer/service partner.

Non-operating condition

Outside rearview mirror may not alert the driver when:

- The outside rearview mirror housing is damaged or covered with debris.
- The window is covered with debris.
- The windows are severely tinted.
- The mirror is covered with dirt, snow, or debris.

Limitations of the function

The driver must be cautious in the below situations, because the function may not detect other vehicles or objects in certain circumstances.

- When a trailer or carrier is installed.
- The vehicle drives in inclement weather such as heavy rain or snow.
- The sensor is polluted with rain, snow, mud, etc.
- The rear bumper where the sensor is located is covered with a foreign object such as a bumper sticker, a bumper guard, a bike rack, etc.
- The rear bumper is damaged, or the sensor is out of the original default position.
- The vehicle height gets lower or higher due to heavy loading in a trunk, abnormal tire pressure, etc.
- When the temperature of the rear bumper is high.
- When the sensors are blocked by other vehicles, walls or parking-lot pillars.
- The vehicle drives on a curved road.

- The road pavement (or the peripheral ground) abnormally contains metallic components (i.e. possibly due to subway construction).
- There is a fixed object near the vehicle, such as a guardrail.
- While going down or up a steep road where the height of the lane is different.
- Driving on a narrow road where trees or grass or overgrown.
- Driving in rural areas where the sensor does not detect another vehicle for an extended period of time.
- Driving on a wet road.
- Driving on a road where the guardrail or wall is in double structure.
- A big vehicle is near such as a bus or truck.
- When the other vehicle approaches very close.
- When the other vehicle passes at a very fast speed.
- While changing lanes.
- If the vehicle has started at the same time as the vehicle next to you and has accelerated.
- When the vehicle in the next lane moves two lanes away from you OR when the vehicle two lanes away moves to the next lane from you.
- A motorcycle or bicycle is near.
- A flat trailer is near.
- If there are small objects in the detecting area such as a shopping cart or a baby stroller.
- If there is a low height vehicle such as a sports car.
- The brake pedal is depressed.
- ESC (Electronic Stability Control) is activated.
- ESC (Electronic Stability Control) malfunctions.
- The tire pressure is low or a tire is damaged.
- The brake is reworked.
- The vehicle sharply stops.
- Temperature is extremely low around the vehicle.
- The vehicle severely vibrates while driving over a bumpy road, uneven/bumpy road, or concrete patch.
- The vehicle drives on a slippery surface due to snow, water puddle, or ice.

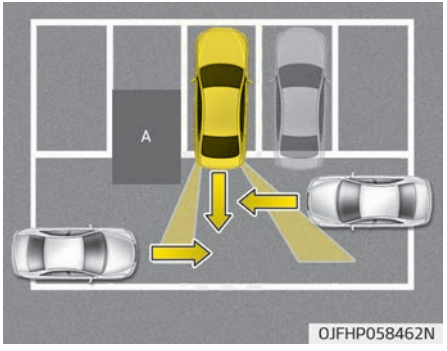

[A]: Structure

- Driving where there is a vehicle or structure near
  The function may not operate properly when driving where there is a vehicle or structure near.
  In certain instances, the function may not detect the vehicle approaching from behind and the warning or brake may not operate properly.
  Always pay attention to your surrounding while driving.

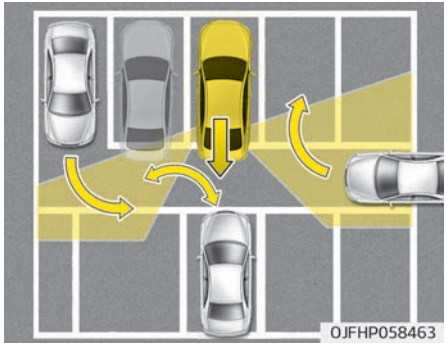

- When the vehicle is in a complex parking environment
  The function may not operate properly when the vehicle is in a complex parking environment.
  In certain instances, the function may not be able to exactly determine the risk of collision for the vehicles which are parking or pulling out near your vehicle (e.g. a vehicle escaping beside your vehicle, a vehicle parking or pulling out in the rear area, a vehicle approaching your vehicle making a turn, etc.).
  In this case, the warning or brake may not operate properly.

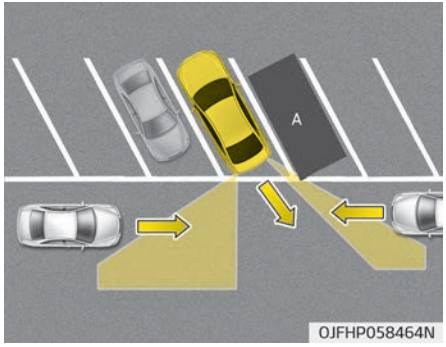

[A]: Vehicle

- When the vehicle is parked diagonally
  The function may not operate properly when the vehicle is parked diagonally.
  In certain instances, when the diagonally parked vehicle is pulled out of the parking space, the function may not detect the vehicle approaching from the rear left/right of your vehicle. In this case, the warning or brake may not operate properly.
  Always pay attention to your surrounding while driving.

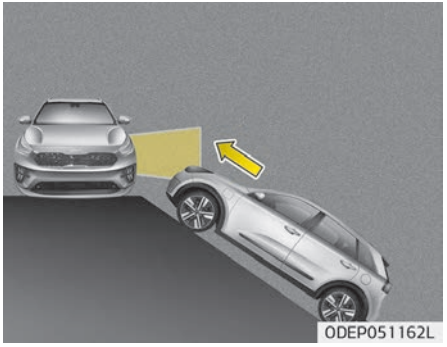

- When the vehicle is on/near a slope
  The function may not operate properly when the vehicle is on/near a slope.
  In certain instances, the function may not detect the vehicle approaching from the rear left/right and the warning or brake may not operate properly.
  Always pay attention to your surrounding while driving.

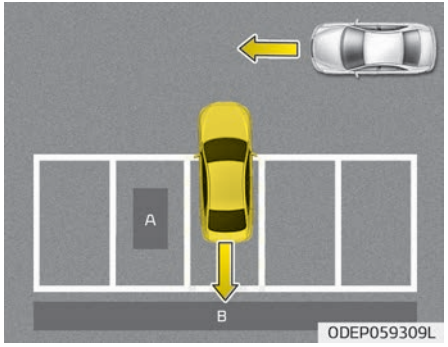

[A]: Structure, [B]: Wall

- Pulling into the parking space where there is a structure
  The function may not operate properly when pulling in the vehicle to the parking space where there is a structure at the back or side of your vehicle.
  In certain instances, when backing into the parking space, the function may not detect the vehicle moving in front of your vehicle. In this case, the warning or brake may not operate properly.
  Always pay attention to the parking space while driving.

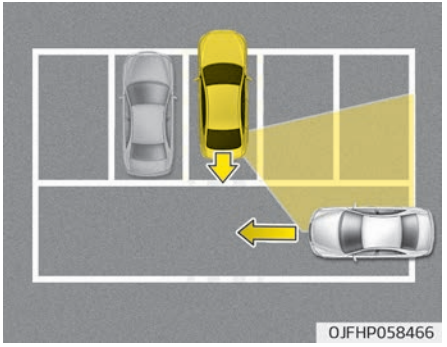

- When the vehicle is parked rearward
  If the vehicle is parked rearward and the sensor detects the another vehicle in the rear area of the parking space, the function can warn or control braking. Always pay attention to the parking space while driving.

DECLARATION OF CONFORMITY (IF EQUIPPED)

The radio frequency components (Front Radar) complies:

For Europe and countries subject to CE certification

Declaration of Conformity
Radiocontrolled Vehicle components

CE

Hereby, APTIV, 46902 Kokomo declares that this L2C0051TR is in compliance with the essential requirements and other relevant provisions of Directive 2014/53/EU (RED).
The original declaration of conformity can be accessed at the following link: www.aptiv.com/automotive-homologation

frequency band 76-77 GHz
Maximum Output Power 30 dBm (1,0 W)

ODEP050341N

For Japan

This device is granted pursuant to the Japanese Radio Law
under the grant ID n° : 209-J00039
This device should not be modified (otherwise the granted designation number will become invalid)

本製品は、電波法に基づく特定無線設備の技術基準適合証明などを受けております。
認証番号: 209-J00039
本製品の改造は禁止されています。（適合証明番号などが無効となります。）

ODEP050343N

For Republic of Korea

KCC-CRI-DPH-L2C0051TR

1.상호 : Aptiv Safety & Mobility Services Singapore Pte Ltd
2.기기명칭 및 모델명
- 기기명칭: 특정소출력 무선기기(차량 충돌 방지용 레이다 무선기기)
- 모델명: L2C0051TR
3.제조자 및 제조국가
- 제조자: Aptiv Safety & Mobility Services Singapore Pte Ltd
- 제조국가: 싱가포르

ODEP050342N

For Paraguay

ODEP050344N

For United States and United States territories

OYB060040L

FCC ID : L2C0051TR

This device complies with Part 15 of the FCC Rules. Operation is subject to the following two conditions:
(1) this device may not cause harmful interference, and
(2) this device must accept any interference received, including interference that may cause undesired operation.

CAUTION TO USERS
Changes or modifications not expressly approved by the party responsible for compliance could void the user`s authority to operate the equipment.

ODEP050345N

For Canada

Model: L2C0051TR
IC: 3432A-0051TR

This device complies with Industry Canada licence-
exempt RSS standard(s). Operation is subject to the following two conditions:
(1) this device may not cause interference, and
(2) this device must accept any interference,
including interference that may cause undesired
operation of the device.
Le présent appareil est conforme aux CNR d'Industrie Canada applicables aux appareils
radio exempts de licence. L'exploitation est autorisée
aux deux conditions suivantes:
(1) l'appareil ne doit pas produire de brouillage,
et
(2) l'utilisateur de l'appareil doit accepter tout
brouillage radioélectrique subi, même si le brouillage est susceptible d'en compromettre
le fonctionnement.

ODEP050346N

For Taiwan

CCAB13LP0080T2

ODEP050347N

電信法第 48 條、低功率電波輻射性電機管理辦法
第十二條
經型式認證合格之低功率射頻電機，非經許可，公司、商號或使用者均不得擅自變更頻率、加大功率或變更原 設計之特性及功能。
第十四條
低功率射頻電機之使用不得影響飛航安全及干擾合法通信；經發現有干擾現象時，應立即停用，並改善至無干 擾時方得繼續使用。
前項合法通信，指依電信法規定作業之無線電通信。
低功率射頻電機須忍受合法通信或工業、科學及醫療用 電波輻射性電機設備之干擾。

Article 12
Without permission, any company, firm or user shall not alter the frequency, increase the power, or change the characteristics and functions of the original design of the certified lower power frequency electric machinery.

Article 14
The application of low power frequency electric machineries shall not affect the navigation safety nor interface a legal communication, if an interference is found, the service will be suspended until improvement is made and the interference no longer exist.

ODL3059243LB

For Indonesia

45445/SDPPI/2016
4927

ODEP050348N

For Malaysia

MCMC
CIDF17000143

ODEP050349N

For Singapore

Complies with
IMDA Standards
DA 105753

ODEP050350N

For Brazil

ANATEL
0039-13-8645
Este equipamento opera em caráter secundário, isto é, não tem direito à proteção contra interferência prejudicial, mesmo de estações do mesmo tipo, e não pode causar interferência a sistemas operando em caráter primário.

ODEP050351N

For Mexico

IFETEL: RLVDEL213-1676

"La operación de este equipo está sujeta a las siguientes dos condiciones:
(1) es posible que este equipo o dispositivo no cause interferencia perjudicial y (2) este equipo o dispositivo debe aceptar cualquier interferencia, incluyendo la que pueda causar su operación no deseada."

ODEP050352N

For Ukraine

UA RF: 2APTV 51TR

справжнім (найменування виробника) заявляє, що тип радіообладнання (позначення типу радіообладнання) відповідає Технічному регламенту радіообладнання;

повний текст декларації про відповідність доступний на веб-сайті за такою адресою:
www.aptiv.com/automotive-homologation

ODEP050353N

For Moldova

8645

ODEP050354N

For Jordan

TRC/LPD/2012/191

ODEP050355N

For United Arab Emirates

For South Africa

For Thailand

For Serbia and Montenegro

For Israel

14. תנאים מיוחדים והערות המשרד:
לפני השימוש יודאו היבואן שעל אריזה חיצונית של המוצר יודבק מדבקה, בה יהיה רשום כי:
א. השימוש במכשיר היטו על בסיס "משני" ופטור מרשיון הפעלה אלחוטי.
כלומר - לא מוגן מהפרעות וללא הפרעה למערכות אחרות הפועלות כדין.
ב. רק "בפעלת בזק" לשימוש עצמי של הלקוח בלבד, הציוד פטור מרשיון הפעלה אלחוטי.
מתן "שרות בזק" לצד ג' מחייב רשיון מיוחד ממשרד התקשורת.
ג. אסור להחליף את האנטנה המקורית של המכשיר, ולא לעשות בו כל שינוי טכני אחר.
ד האישור הנ"ל תקף אך ורק עבור ציוד אלחוטי, 'operating frequencies of the device' ופטור
הפועל בתחום תדרים של.
הספק השידור שלו אינו עולה על 'output power of the device'

ODEP050360N

For China

车辆驾驶辅助雷达系统型号：L2C0051TR
执行标准：信部无[2005]423号
频率范围：76-77 GHz
放射功率：等效全向辐射功率(EIRP) 30dBm
天线类型：印刷阵列天线
用户控制：不可
使用温度：-40°C ~ +85°C
电压：DC 12.0V

不得擅自更改发射频率、加发射功率（包括额外加装射频功率放大器），不得擅自外接天线或改用其它发射天线

使用时不得对各种合法的无线电通信业务产生有害干扰；一旦发现有干扰现象时，应立即停止使用，并采取措施消除干扰后方可继续使用

使用微功率无线电设备，必须耐受各种无线电业务的干扰或工业、科学及医疗应用设备的辐射干扰

机场等的电磁环境保护区域内使用微功率设备，应当遵守电磁环境保护及相关行业主管部门的规定

ODEP050361N

The radio frequency components (Rear Corner Radar) complies:

For United States and United States territories

OYB060040L

UR8 303919

This device complies with Part 15 of the FCC Rules. Operation is subject to the following two conditions:
(1) this device may not cause harmful interference, and
(2) this device must accept any interference received, including interference that may cause undesired operation.

CAUTION TO USERS
Changes or modifications not expressly approved by the party responsible for compliance could void the user`s authority to operate the equipment.

ODEP050362N

For Canada

This Category II radiocommunication device complies with Industry Canada Standard RSS-310.
Ce dispositif de radiocommunication de catégorie II respecte la norme CNR-310 d'Industrie Canada .

This device complies with Industry Canada licence-exempt RSS standard(s). Operation is subject to the following two conditions: (1) this device may not cause interference, and (2) this device must accept any interference, including interference that may cause undesired operation of the device.
Le présent appareil est conforme aux CNR d'Industrie Canada applicables aux appareils radio exempts de licence. L'exploitation est autorisée aux deux conditions suivantes :
(1) l'appareil ne doit pas produire de brouillage, et (2) l'utilisateur de l'appareil doit accepter tout brouillage radioélectrique subi, même si le brouillage est susceptible d'en compromettre le fonctionnement.

ODEP050363N

For Taiwan

CCAB12LP4910T0

ODEP050364N

電信法第 48 條, 低功率電波輻射性電機管理辦法
第十二條
經型式認證合格之低功率射頻電機，非經許可，公司、商號或使用者均不得擅自變更頻率、加大功率或變更原設計之特性及功能。
第十四條
低功率射頻電機之使用不得影響飛航安全及干擾合法通信；經發現有干擾現象時，應立即停用，並改善至無干擾時方得繼續使用。
前項合法通信，指依電信法規定作業之無線電通信。低功率射頻電機須忍受合法通信或工業、科學及醫療用電波輻射性電機設備之干擾。

Article 12
Without permission, any company, firm or user shall not alter the frequency, increase the power, or change the characteristics a nd functions of the original design of the certified lower power frequency electric m achinery.
Article 14
The application of low power frequency el ectric machineries shall not affect the navi gation safety nor interface a legal commu nication, if an interference is found, the se rvice will be suspended until improvement is made and the interference no longer exi st.

ODEP050365N

For Malaysia

For Mongolia

For Philippines

For Singapore

For Vietnam

For Brazil

ANATEL
Agência Nacional de Telecomunicações
0772-13-4942

Este equipamento opera em caràter secun dàrio, isto ê, não tem direito à proteção c ontra interferência prejudicial, mesmo de estaçoes do mesmo tipo,e não pode caus ar interferência a sistemas operando em c aràter primàrio.

ODEP050371N

For Mexico

IFETEL: RCPVAXT 12-1288

"La operación de este equipo está sujeta a las siguientes dos condiciones:
(1) es posible que este equipo o dispositivo no cause interferencia perjudicial y (2) este equipo o dispositivo debe aceptar cualquier interferencia, incluyendo la que pueda causar su operación no deseada."

ODEP050372N

For Paraguay

PARAGUAY
CONATEL
NR:2017-08-I-0000279

ODEP050373N

For Ukraine

ODL3059228LB

Valeo Schalter und Sensoren GmbH заявляє, що тип радіообладнання MBHL2 відповідає технічним регламентам радіотехнічного обладнання; повний текст декларації від відповідність доступна на веб-сайті за адресою: <https://valeo.com/declaration-of-conformity/files/MBHL TypeA_DoC_TR-RED_WUE.PDF>

ODEP050374N

For Moldova

1024

ODEP050375N

For Algeria

CE + Agréé par l'ARPT:
<1247/1-LG408/DT/DGARPT/18>

ODEP050376N

For Oman

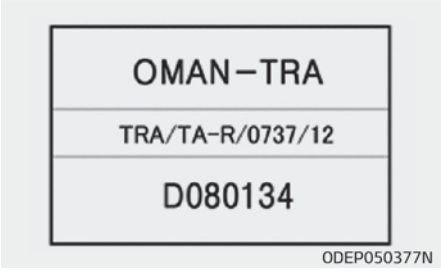

For United Arab Emirates

For Indonesia

For Mozambique

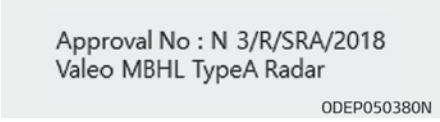

For Zambia

For Argentina

For Jamaica

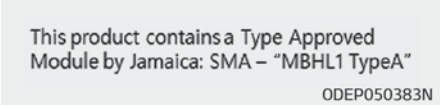

For Europe and countries subject to CE certification

Declaration of Conformity
Radiocontrolled Vehicle components

CE

The radio frequency components of the vehi cle comply with requirements and other relev ant provisions of Directive 1995/5/EC.

Further information including the manufactur er's decleration of conformity is available on as follow ;
https://valeo.com/declaration-of-conformity

ODEP050384N

ECONOMICAL OPERATION

Your vehicle's fuel economy depends mainly on your style of driving, where you drive and when you drive.
Each of these factors affects how many kilometers (miles) you can get from a liter (gallon) of fuel. To operate your vehicle as economically as possible, use the following driving suggestions to help save money in both fuel and repairs:

- Drive smoothly. Accelerate at a moderate rate. Do not make "jackrabbit" starts or full-throttle shifts and maintain a steady cruising speed. Do not race between stop lights. Try to adjust your speed to the traffic so you do not have to change speeds unnecessarily. Avoid heavy traffic whenever possible. Always maintain a safe distance from other vehicles so you can avoid unnecessary braking. This also reduces brake wear.
- Drive at a moderate speed. The faster you drive, the more fuel your vehicle uses. Driving at a moderate speed, especially on the highway, is one of the most effective ways to reduce fuel consumption.
- Do not "ride" the brake or clutch pedal. This can increase fuel consumption and also increase wear on these components. In addition, driving with your foot resting on the brake pedal may cause the brakes to overheat, which reduces their effectiveness and may lead to more serious consequences.
- Take care of your tires. Keep them inflated to the recommended pressure. Incorrect inflation, either too much or too little, results in unnecessary tire wear. Check the tire pressures at least once a month.
- Be sure that the wheels are aligned correctly. Improper alignment can result from hitting curbs or driving too fast over irregular surfaces. Poor alignment causes faster tire wear and may also result in other problems as well as greater fuel consumption.
- Keep your vehicle in good condition. For better fuel economy and reduced maintenance costs, maintain your vehicle in accordance with “the maintenance schedule” on page 8-09. If you drive your vehicle in severe conditions, more frequent maintenance is required (see “Maintenance under severe usage conditions” on page 8-15 for details).
- Keep your vehicle clean. For maximum service, your vehicle should be kept clean and free of corrosive materials. It is especially important that mud, dirt, ice, etc. not be allowed to accumulate on the underside of the vehicle. This extra weight can result in increased fuel consumption and also contribute to corrosion.
- Travel lightly. Do not carry unnecessary weight in your vehicle. Weight reduces fuel economy.
- Do not let the engine idle longer than necessary. If you are waiting (and not in traffic), turn off your engine and restart only when you're ready to go.

- Remember, your vehicle does not require extended warm-up. After the engine has started, allow the engine to run for 10 to 20 seconds prior to placing the vehicle in gear. In very cold weather, however, give your engine a slightly longer warmup period.
- Do not "lug" or "over-rev" the engine. Lugging is driving too slowly in too high a gear resulting engine bucking. If this happens, shift to a lower gear. Over-revving is racing the engine beyond its safe limit. This can be avoided by shifting at the recommended speeds.
- Use your air conditioning sparingly. The air conditioning system is operated by engine power so your fuel economy is reduced when you use it.
- Open windows at high speeds can reduce fuel economy.
- Fuel economy is less in crosswinds and headwinds. To help offset some of this loss, slow down when driving in these conditions.

Keeping a vehicle in good operating condition is important both for economy and safety. Therefore, have the system serviced by a professional workshop. Kia recommends to visit an authorized Kia dealer/service partner.

⚠ WARNING

■ Engine off during motion

Never turn the engine off to coast down hills or anytime the vehicle is in motion. The power steering and power brakes will not function properly without the engine running. Instead, keep the engine on and downshift to an appropriate gear for engine braking effect. In addition, turning off the ignition while driving could engage the steering wheel lock (if equipped) resulting in loss of vehicle steering which could cause serious injury or death.

SPECIAL DRIVING CONDITIONS

Hazardous driving conditions

When hazardous driving conditions are encountered such as water, snow, ice, mud, sand, or similar hazards, follow these suggestions:

- Drive cautiously and allow extra distance for braking.
- Avoid sudden braking or steering.
- When braking with non-ABS brakes pump the brake pedal with a light up-and-down motion until the vehicle is stopped.

⚠ WARNING

■ ABS

Do not pump the brake pedal on a vehicle equipped with ABS.

- If stalled in snow, mud, or sand, use second gear. Accelerate slowly to avoid spinning the drive wheels.
- Use sand, rock salt, tire chains, or other non-slip material under the drive wheels to provide traction when stalled in ice, snow, or mud.

⚠ WARNING

■ Downshifting

Downshifting with a dual clutch transmission, while driving on slippery surfaces can cause an accident. The sudden change in tire speed could cause the tires to skid. Be careful when downshifting on slippery surfaces.

Reducing the risk of a rollover

This multi-purpose passenger vehicle is defined as a Sports Utility Vehicle (SUV).

SUV's have higher ground clearance and a narrower track to make them capable of performing in a wide variety of road applications. Specific design characteristics give them a higher center of gravity than ordinary vehicles. An advantage of the higher ground clearance is a better view of the road, which allows you to anticipate problems. They are not designed for cornering at the same speeds as conventional passenger vehicles. Due to this risk, driver and passengers are strongly recommended to buckle their seat belts. In a rollover crash, an unbelted person is more likely to die than a person wearing a seat belt. There are steps that a driver can make to reduce the risk of a rollover. If at all possible, avoid sharp turns or abrupt maneuvers, do not load your roof rack with heavy cargo, and never modify your vehicle in any way.

⚠ WARNING

■ Rollover

As with other Sports Utility Vehicle (SUV), failure to operate this vehicle

(Continued)

(Continued)

correctly may result in loss of control, an accident or vehicle rollover.

- **Utility vehicles have a significantly higher rollover rate than other types of vehicles.**
- **Specific design characteristics (higher ground clearance, narrower track, etc.) give this vehicle a higher center of gravity than ordinary vehicles.**
- **A SUV is not designed for cornering at the same speeds as conventional vehicles.**
- **Avoid sharp turns or abrupt maneuvers.**
- **In a rollover crash, an unbelted person is significantly more likely to die than a person wearing a seat belt. Make sure everyone in the vehicle is properly buckled up.**

⚠ WARNING

Your vehicle is equipped with tires designed to provide safe ride and handling capability. Do not use a size and type of tire and wheel that is different from the one that is originally installed on your vehicle. It can affect the safety and performance of your vehicle, which could lead to steering failure or rollover and serious injury. When replacing the tires, be sure to equip all four tires with the tire and wheel of the same size, type, tread, brand and load-carrying capacity. If you nevertheless decide to equip your vehicle with any tire/wheel combination not recommended by Kia for off road driving, you should not use these tires for highway driving.

Rocking the vehicle

If it is necessary to rock the vehicle to free it from snow, sand, or mud, first turn the steering wheel right and left to clear the area around your front wheels. Then, shift back and forth between R (Reverse) and any forward gear in vehicles equipped with an Dual clutch transmission. Do not race the engine, and spin the wheels as little as possible. If you are still stuck after a few tries, have the vehicle pulled out by a tow vehicle to avoid engine overheating and possible damage to the transmission.

⚠ CAUTION

Prolonged rocking may cause engine over-heating, transmission damage or failure, and tire damage.

⚠ WARNING

■ Spinning tires

Do not spin the wheels, especially at speeds more than 56 km/h (35 mph). Spinning the wheels at

(Continued)

(Continued)

high speeds when the vehicle is stationary could cause a tire to overheat which could result in tire damage that may injure bystanders.

NOTICE

ESC should be turned OFF prior to rocking the vehicle.

WARNING

If your vehicle becomes stuck in snow, mud, sand, etc., then you may attempt to rock the vehicle free by moving it forward and backward. Do not attempt this procedure if people or objects are anywhere near the vehicle. During the rocking operation the vehicle may suddenly move forward or backward as it becomes unstuck, causing injury or damage to nearby people or objects.

Smooth cornering

Avoid braking or gear changing in corners, especially when roads are wet. Ideally, corners should always be taken under gentle acceleration. If you follow these suggestions, tire wear will be held to a minimum.

Driving at night

Because night driving presents more hazards than driving in the daylight, here are some important tips to remember:

- Slow down and keep more distance between you and other vehicles, as it may be more difficult to see at night, especially in areas where there may not be any street lights.
- Adjust your mirrors to reduce the glare from other driver's headlights.
- Keep your headlights clean and properly aimed on vehicles not equipped with the automatic headlight aiming feature. Dirty or improperly aimed headlights will make it much more difficult to see at night.
- Avoid staring directly at the headlights of oncoming vehicles. You could be temporarily blinded, and it will take several seconds for your eyes to readjust to the darkness.

Driving in the rain

Rain and wet roads can make driving dangerous, especially if you're not prepared for the slick pavement. Here are a few things to consider when driving in the rain:

- A heavy rainfall will make it harder to see and will increase the distance needed to stop your vehicle, so slow down.
- Keep your windshield wiping equipment in good shape. Replace your windshield wiper blades when they show signs of streaking or missing areas on the windshield.
- If your tires are not in good condition, making a quick stop on wet pavement can cause a skid and possibly lead to an accident. Be sure your tires are in good shape.
- Turn on your headlights to make it easier for others to see you.
- Driving too fast through large puddles can affect your brakes. If you must go through puddles, try to drive through them slowly.
- If you believe you may have gotten your brakes wet, apply them lightly while driving until normal braking operation returns.

Driving in flooded areas

Avoid driving through flooded areas unless you are sure the water is no higher than the bottom of the wheel hub. Drive through any water slowly. Allow adequate stopping distance because brake performance may be affected.
After driving through water, dry the brakes by gently applying them several times while the vehicle is moving slowly.

Driving off-road

Drive carefully off-road because your vehicle may be damaged by rocks or roots of trees. Become familiar with the off-road conditions where you are going to drive before you begin driving.

Highway driving

Tires

Adjust the tire inflation pressures to specification. Low tire inflation pressures will result in overheating and possible failure of the tires.
Avoid using worn or damaged tires which may result in reduced traction or tire failure.

NOTICE

Never exceed the maximum tire inflation pressure shown on the tires.

WARNING

- **Underinflated or overinflated tires can cause poor handling, loss of vehicle control, and sudden tire failure leading to accidents, injuries, and even death. Always check the tires for proper inflation before driving. For proper tire pressures, refer to "Tires and wheels" on page 9-09.**

(Continued)

(Continued)

- **Driving on tires with no or insufficient tread is dangerous. Worn-out tires can result in loss of vehicle control, collisions, injury, and even death. Worn-out tires should be replaced as soon as possible and should never be used for driving. Always check the tire tread before driving your vehicle. For further information and tread limits, refer to "Tires and wheels" on page 8-46.**

Fuel, engine coolant and engine oil

High speed travel consumes more fuel than urban motoring. Do not forget to check both engine coolant and engine oil.

Drive belt

A loose or damaged drive belt may result in overheating of the engine.

WINTER DRIVING

Severe weather conditions in the winter result in greater wear and other problems. To minimize the problems of winter driving, you should follow these suggestions:

❊ Snow tires and tire chains for the national language (Icelandic) see Appendix chapter 10-02.

Snowy or icy conditions

To drive your vehicle in deep snow, it may be necessary to use snow tires or to install tire chains on your tires. If snow tires are needed, it is necessary to select tires equivalent in size and type of the original equipment tires. Failure to do so may adversely affect the safety and handling of your vehicle. Furthermore, speeding, rapid acceleration, sudden brake applications, and sharp turns are potentially very hazardous practices.

During deceleration, use engine braking to the fullest extent. Sudden brake applications on snowy or icy roads may cause skids to occur. You need to keep sufficient distance between the vehicle in operation in front and your vehicle. Also, apply the brake gently. It should be noted that installing tire chains on the tire will provide a greater driving force, but will not prevent side skids.

❊ NOTICE

Tire chains are not legal in all countries. Check the country laws before fitting tire chains.

Snow tires

If you mount snow tires on your vehicle, make sure they are radial tires of the same size and load range as the original tires. Mount snow tires on all four wheels to balance your vehicle's handling in all weather conditions. Keep in mind that the traction provided by snow tires on dry roads may not be as high as your vehicle's original equipment tires. You should drive cautiously even when the roads are clear. Check with the tire dealer for maximum speed recommendations.

⚠ WARNING

■ Snow tire size

Snow tires should be equivalent in size and type to the vehicle's stand-

(Continued)

(Continued)

ard tires. Otherwise, the safety and handling of your vehicle may be adversely affected.

Do not install studded tires without first checking local, state and municipal regulations for possible restrictions against their use.

Tire chains

Since the sidewalls of radial tires are thinner, they can be damaged by mounting some types of snow chains on them. Therefore, the use of snow tires is recommended instead of snow chains. Do not mount tire chains on vehicles equipped with aluminum wheels; snow chains may cause damage to the wheels. If snow chains must be used, use wire-type chains with a thickness of less than 12 mm (0.47 in). Damage to your vehicle caused by improper snow chain use is not covered by your vehicle manufacturers warranty.
When using tire chains, install tire chains only on the front tires.

⚠ CAUTION

- **Make sure the snow chains are the correct size and type for your tires. Incorrect snow chains can cause damage to the vehicle body and suspension and may not be covered by your vehicle manufacturer warranty. Also, the snow chain connecting hooks may be damaged from contacting vehicle components causing the snow chains to come loose from the tire. Make sure the snow chains are SAE class "S" certified.**
- **Always check chain installation for proper mounting after driving approximately 0.5 to 1 km (0.3 to 0.6 miles) to ensure safe mounting. Retighten or remount the chains if they are loose.**
- **If your vehicle has 18 inch tires, do not use tire chains. They can damage your vehicle (wheel, suspension and body).**

Chain installation

When installing chains, follow the manufacturer's instructions and mount them as tightly as you can. Drive slowly with chains installed. If you hear the chains contacting the body or chassis, stop and tighten them. If they still make contact, slow down until it stops. Remove the chains as soon as you begin driving on cleared roads.

⚠ WARNING

■ Mounting chains

When mounting snow chains, park the vehicle on level ground away from traffic. Turn on the vehicle Hazard Warning flashers and place a triangular emergency warning device behind the vehicle if available. Always place the vehicle in P (Park), apply the parking brake and turn off the engine before installing snow chains.

⚠ WARNING

■ **Tire chains**

- **The use of chains may adversely affect vehicle handling.**
- **Do not exceed 30 km/h (20 mph) or the chain manufacturer's recommended speed limit, whichever is lower.**
- **Drive carefully and avoid bumps, holes, sharp turns, and other road hazards, which may cause the vehicle to bounce.**
- **Avoid sharp turns or locked-wheel braking.**

⚠ CAUTION

- **Chains that are the wrong size or improperly installed can damage your vehicle's brake lines, suspension, body and wheels.**
- **Stop driving and retighten the chains any time you hear them hitting the vehicle.**

Use high quality ethylene glycol coolant

Your vehicle is delivered with high quality ethylene glycol coolant in the cooling system. It is the only type of coolant that should be used because it helps prevent corrosion in the cooling system, lubricates the water pump and prevents freezing. Be sure to replace or replenish your coolant in accordance with the maintenance schedule in "Cooling system" on page 8-26. Before winter, have your coolant tested to assure that its freezing point is sufficient for the temperatures anticipated during the winter.

Check battery and cables

Winter puts additional burdens on the battery system. Visually inspect the battery and cables as described in "For best battery service" on page 8-42. Have the level of charge in your battery checked by a professional workshop. Kia recommends to visit an authorized Kia dealer/service partner.

Change to "winter weight" oil if necessary

In some climates it is recommended that a lower viscosity "winter weight" oil be used during cold weather. See "Recommendations" on page 9-14. If you aren't sure what weight oil you should use, Kia recommends to consult an authorized Kia dealer/service partner.

Check spark plugs and ignition system

Inspect your spark plugs as described in "Spark plugs" on page 8-25 and replace them if necessary. Also check all ignition wiring and components to be sure they are not cracked, worn or damaged in any way.

To keep locks from freezing

To keep the locks from freezing, squirt an approved de-icer fluid or glycerine into the key opening. If a lock is covered with ice, squirt it with an approved de-icing fluid to remove the ice. If the lock is frozen internally, you may be able to thaw it out by using a heated key. Handle the heated key with care to avoid injury.

Use approved window washer anti-freeze in system

To keep the water in the window washer system from freezing, add an approved window washer anti-freeze solution in accordance with instructions on the container. Window washer anti-freeze is available from an authorized Kia dealer/service partner and most auto parts outlets. Do not use engine coolant or other types of anti-freeze as these may damage the paint finish.

Don't let your parking brake freeze

Under some conditions your parking brake can freeze in the engaged position. This is most likely to happen when there is an accumulation of snow or ice around or near the rear brakes or if the brakes are wet. If there is a risk the parking brake may freeze, apply it only temporarily while you put the shift lever in P (Dual clutch transmission) and block the rear wheels so the vehicle cannot roll. Then release the parking brake.

Don't let ice and snow accumulate underneath

Under some conditions, snow and ice can build up under the fenders and interfere with the steering. When driving in severe winter conditions where this may happen, you should periodically check underneath the vehicle to be sure the movement of the front wheels and the steering components is not obstructed.

Carry emergency equipment

Depending on the severity of the weather, you should carry appropriate emergency equipment. Some of the items you may want to carry include tire chains, tow straps or chains, flashlight, emergency flares, sand, shovel, jumper cables, window scraper, gloves, ground cloth, coveralls, blanket, etc.

TRAILER TOWING

If you are considering towing with your vehicle, you should first check with your country's Department of Motor Vehicles to determine their legal requirements.
Since laws vary the requirements for towing trailers, cars, or other types of vehicles or apparatus may differ. Kia recommends to ask an authorized Kia dealer/service partner.

⚠ WARNING

■ Towing a trailer

If you don't use the correct equipment and/or drive improperly, you can lose control when you pull a trailer. For example, if the trailer is too heavy, the brakes may not work well - or even at all. You and your passengers could be seriously or fatally injured. Pull a trailer only if you have followed all the steps in this section.

⚠ WARNING

■ Weight limits

Before towing, make sure the total trailer weight, GCW (gross combination weight), GVW (gross vehicle weight), GAW (gross axle weight) and trailer tongue load are all within the limits.

✻ NOTICE

■ For Europe
(Continued)

(Continued)

- The technically permissible maximum load on the rear axle(s) may be exceeded by not more than 15 % and the technically permissible maximum laden mass of the vehicle may be exceeded by not more than 10 % or 100 kg (220.4 lbs.), whichever value is lower.
  In this case, do not exceed 100 km/h (62.1 mph) of vehicle speed.

(Continued)

(Continued)

- When towing a trailer, the additional load imposed at the trailer coupling device may cause the rear tire maximum load ratings to be exceed, but not by more than 15 %.
  In such a case, do not exceed 100 km/h (62.1 mph) of vehicle speed, and the rear tire pressure should be inflated 20 kPa (0.2 bar) more than the tire pressure(s) as recommended for normal use (i.e. without a trailer attached.)

⚠ CAUTION

Pulling a trailer improperly can damage your vehicle and result in costly repairs not covered by your warranty. To pull a trailer correctly, follow the advice in this section.

Your vehicle can tow a trailer. To identify what the vehicle trailering capacity is for your vehicle, you should read the information in "Weight of the trailer" on page 6-154.

Remember that trailering is different than just driving your vehicle by itself. Trailering means changes in handling, durability, and fuel economy. Successful, safe trailering requires correct equipment, and it has to be used properly.
This section contains many time-tested, important trailering tips and safety rules. Many of these are important for your safety and that of your passengers. Please read this section carefully before you pull a trailer.
Load-pulling components such as the engine, transaxle, wheel assemblies, and tires are forced to work harder against the load of the added weight. The engine is required to operate at relatively higher speeds and under greater loads. This additional burden generates extra heat. The trailer also considerably adds wind resistance, increasing the pulling requirements.

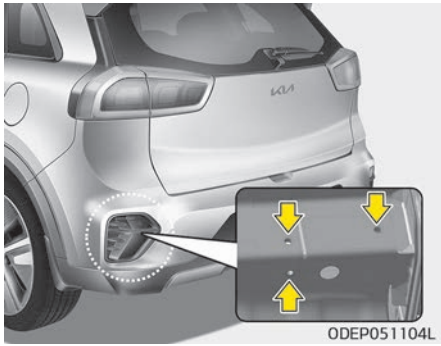

✻ NOTICE

■ Location of trailer mounting

The mounting hole for hitches are located on both sides of the underbody behind the rear tires.

Hitches

It's important to have the correct hitch equipment. Crosswinds, large trucks going by, and rough roads are a few reasons why you'll need the right hitch. Here are some rules to follow:

- Do you have to make any holes in the body of your vehicle when you install a trailer hitch? If you do, then be sure to seal the holes later when you remove the hitch.
- The bumpers on your vehicle are not intended for hitches. Do not attach rental hitches or other bumper-type hitches to them. Use only a frame-mounted hitch that does not attach to the bumper.
- Any part of the rear number plate or lighting devices of the vehicle must not be obscured by the mechanical coupling device.
  If the rear number plate and/or lighting devices can be obscured partially by any part of the mechanical coupling device, mechanical coupling devices that can not be easily removed or repositioned without use of any tools, except an easily operated (i.e. an effort not exceeding 20Nm) release key which is supplied by the manufacturer of the coupling device, are not permitted for use.
  Please note that the mechanical coupling device that is fitted and not in use must always be removed or repositioned if the rear number plate and/or rear lighting devices are obscured by any part of the mechanical coupling device.
- Kia trailer hitch accessary is available at an authorized Kia dealer/service partner.

Safety chains

You should always attach chains between your vehicle and your trailer. Cross the safety chains under the tongue of the trailer so that the tongue will not drop to the road if it becomes separated from the hitch.
Instructions about safety chains may be provided by the hitch manufacturer or by the trailer manufacturer. Follow the manufacturer's recommendation for attaching safety chains. Always leave just enough slack so you can turn with your trailer. And, never allow safety chains to drag on the ground.

Trailer brakes

If your trailer is equipped with a braking system, make sure it conforms to your country's regulations and that it is properly installed and operating correctly.
If your trailer weight exceeds the maximum allowed weight without trailer brakes, then the trailer will also require its own brakes as well. Be sure to read and follow the instructions for the trailer brakes so you'll be able to install, adjust and maintain them properly.

- Do not tap into or modify your vehicle's brake system.

⚠ WARNING

■ Trailer brakes

Do not use a trailer with its own brakes unless you are absolutely certain that you have properly set up the brake system. This is not a task for amateurs. Use an experienced, competent trailer shop for this work.

Driving with a trailer

Towing a trailer requires a certain amount of experience. Before setting out for the open road, you must get to know your trailer. Acquaint yourself with the feel of handling and braking with the added weight of the trailer. And always keep in mind that the vehicle you are driving is now a good deal longer and not nearly so responsive as your vehicle is by itself.

Before you start, check the trailer hitch and platform, safety chains, electrical connector(s), lights, tires and mirror adjustment. If the trailer has electric brakes, start your vehicle and trailer moving and then apply the trailer brake controller by hand to be sure the brakes are working. This lets you check your electrical connection at the same time.

During your trip, check occasionally to be sure that the load is secure, and that the lights and any trailer brakes are still working.

Following distance

Stay at least twice as far behind the vehicle ahead as you would when driving your vehicle without a trailer. This can help you avoid situations that require heavy braking and sudden turns.

Passing

You'll need more passing distance up ahead when you're towing a trailer. And, because of the increased vehicle length, you'll need to go much farther beyond the passed vehicle before you can return to your lane.

Backing up

Hold the bottom of the steering wheel with one hand. Then, to move the trailer to the left, just move your hand to the left. To move the trailer to the right, move your hand to the right. Always back up slowly and, if possible, have someone guide you.

Making turns

When you're turning with a trailer, make wider turns than normal. Do this so your trailer won't strike soft shoulders, curbs, road signs, trees, or other objects. Avoid jerky or sudden maneuvers. Signal well in advance.

Turn signals when towing a trailer

When you tow a trailer, your vehicle has to have a different turn signal flasher and extra wiring. The green arrows on your instrument panel will flash whenever you signal a turn or lane change. Properly connected, the trailer lights will also flash to alert other drivers you're about to turn, change lanes, or stop.

When towing a trailer, the green arrows on your instrument panel will flash for turns even if the bulbs on the trailer are burned out. Thus, you may think drivers behind you are seeing your signals when, in fact, they are not. It is important to check occasionally to be sure the trailer bulbs are still working. You must also check the lights every time you disconnect and then reconnect the wires.
Do not connect a trailer lighting system directly to your vehicle's lighting system. Use only an approved trailer wiring harness.
Have yourself assisted by a professional workshop in installing the wiring harness. Kia recommends to visit an authorized Kia dealer/service partner.

⚠ WARNING

Failure to use an approved trailer wiring harness could result in damage to the vehicle electrical system and/or personal injury.

Driving on grades

Reduce speed and shift to a lower gear before you start down a long or steep downgrade. If you don't shift down, you might have to use your brakes so much that they would get hot and no longer operate efficiently.
On a long uphill grade, shift down and reduce your speed to around 70 km/h (45 mph) to reduce the possibility of engine and transaxle overheating.
If your trailer weighs more than the maximum trailer weight without trailer brakes and you have a dual clutch transmission, you should drive in D (Drive) when towing a trailer.
Operating your vehicle in D (Drive) when towing a trailer will minimize heat build up and extend the life of your transaxle.

⚠ CAUTION

- **When towing a trailer on steep grades (in excess of 6%) pay close attention to the engine coolant temperature gauge to ensure the engine does not overheat.**
  If the needle of the coolant temperature gauge moves across the dial towards "H (HOT)", pull over and stop as soon as it is safe to do so, and allow the engine to idle until it cools down. You may proceed once the engine has cooled sufficiently.
- **You must decide driving speed depending on trailer weight and uphill grade to reduce the possibility of engine and transaxle overheating.**

(Continued)

(Continued)

- **When towing a trailer on steep grades, the clutch in the transmission could overheat.**
  When the clutch is overheated, the safe protection mode engages. If the safe protection mode engages, the gear position indicator on the cluster blinks with a chime sound.
  At this time, a warning message will appear on the LCD display and driving may not be smooth.
  If you ignore this warning, the driving condition may become worse.
  To return the normal driving condition, stop the vehicle on flat road and apply the foot brake for a few minutes before driving off.

Parking on hills

Generally, if you have a trailer attached to your vehicle, you should not park your vehicle on a hill. People can be seriously or fatally injured, and both your vehicle and the trailer can be damaged if unexpectedly roll down hill.

⚠ WARNING

■ Parking on a hill

Parking your vehicle on a hill with a trailer attached could cause serious injury or death, should the trailer break loose.
It can be very dangerous to hold your vehicle by applying accelerator on a hill.

However, if you ever have to park your trailer on a hill, here is how to do it:

1. Pull the vehicle into the parking space. Turn the steering wheel in the direction of the curb (left if headed down hill, right if headed up hill).
2. If the vehicle has a dual clutch transmission, place the car in P (Park).
3. Set the parking brake and shut off the vehicle.
4. Place chocks under the trailer wheels on the down hill side of the wheels.
5. Start the vehicle, hold the brakes, shift to neutral, release the parking brake and slowly release the brakes until the trailer chocks absorb the load.
6. Reapply the brakes, reapply the parking brake and shift the vehicle to P (Park) for dual clutch transmission.
7. Shut off the vehicle and release the vehicle brakes but leave the parking brake set.

⚠ WARNING

■ Parking brake

It can be dangerous to get out of your vehicle if the parking brake is not firmly set.
If you have left the engine running, the vehicle can move suddenly. You or others could be seriously or fatally injured.

When you are ready to leave after parking on a hill

1. With the dual clutch transmission in P (Park), apply your brakes and hold the brake pedal down while you:

- Start your engine;
- Shift into gear; and
- Release the parking brake.

2. Slowly remove your foot from the brake pedal.
3. Drive slowly until the trailer is clear of the chocks.
4. Stop and have someone pick up and store the chocks.

Maintenance when trailer towing

Your vehicle will need service more often when you regularly pull a trailer. Important items to pay particular attention to include engine oil, transaxle fluid, axle lubricant and cooling system fluid. Brake condition is another important item to frequently check. Each item is covered in this manual, and the Index will help you find them quickly. If you're trailering, it is a good idea to review these sections before you start your trip.

Do not forget to also maintain your trailer and hitch. Follow the maintenance schedule that accompanied your trailer and check it periodically. Preferably, conduct the check at the start of each day's driving. Most importantly, all hitch nuts and bolts should be tight.

⚠ CAUTION

- **Due to higher load during trailer usage, overheating might occur in hot days or during uphill driving. If the coolant gauge indicates overheating, switch off the air conditioner and stop the vehicle in a safe area to cool down the engine.**
- **When towing check transaxle fluid more frequently.**
- **If your vehicle is not equipped with an air conditioner, you should install a condenser fan to improve engine performance when towing a trailer.**

If you do decide to pull a trailer

Here are some important points if you decide to pull a trailer:

- Consider using a sway control. You can ask a hitch dealer about sway control.
- Do not do any towing with your car during its first 2,000 km (1,200 miles) in order to allow the engine to properly break in. Failure to heed this caution may result in serious engine or transaxle damage.
- When towing a trailer, Kia recommends that you consult an authorized Kia dealer/service partner on additional requirements such as a towing kit, etc.
- Always drive your vehicle at a moderate speed (less than 100 km/h (60 mph)).
- On a long uphill grade, do not exceed 70 km/h (45 mph) or the posted towing speed limit, whichever is lower.
- The chart contains important considerations that have to do with weight:

For Europe

Item		Kappa 1.6 GDI
		DCT
Maximum trailer weight kg (lbs.)	Unbraked	600 kg (1323 lbs.)
	Braked	1,300 kg (2,866 lbs.)
Technically permissible maximum static vertical load/ mass on the coupling point kg (lbs.)		100 kg (220 lbs.)
Front axle to ball point of coupling device mm (inch)		3,585 mm (141 inch)
Rear axle to ball point of coupling device mm (inch)		885 mm (35 inch)

Item	Kappa 1.6 GDI
	DCT
Maximum permissible overhang of the coupling point mm (inch)	910 mm (36 inch)

DCT: Dual clutch transmission

Weight of the trailer

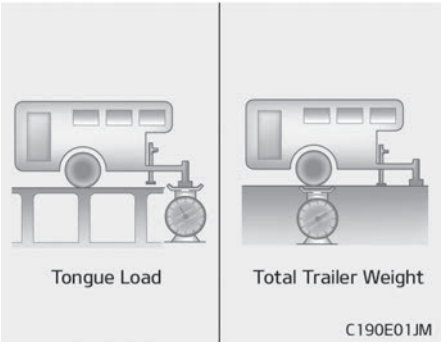

What is the maximum safe weight of a trailer? It should never weigh more than the maximum trailer weight with trailer brakes. But even that can be too heavy.

It depends on how you plan to use your trailer. For example, speed, altitude, road grades, outside temperature and how often your vehicle is used to pull a trailer are all important. The ideal trailer weight can also depend on any special equipment that you have on your vehicle.

Weight of the trailer tongue

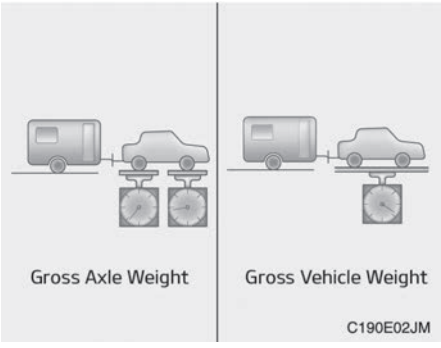

The tongue load of any trailer is an important weight to measure because it affects the total gross vehicle weight (GVW) of your vehicle. This weight includes the curb weight of the vehicle, any cargo you may carry in it, and the people who will be riding in the vehicle. And if you will tow a trailer, you must add the tongue load to the GVW because your vehicle will also be carrying that weight.

The trailer tongue should weigh a maximum of 10% of the total loaded trailer weight, within the limits of the maximum permissible trailer tongue load. After you've loaded your trailer, weigh the trailer and then the tongue, separately, to see if the weights are proper. If they aren't, you may be able to correct them simply by moving some items around in the trailer.

⚠ WARNING

■ Trailer

- **Never load a trailer with more weight in the rear than in the front. The front should be loaded with approximately 60% of the total trailer load; the rear should be loaded with approximately 40% of the total trailer load.**

(Continued)

(Continued)

- **Never exceed the maximum weight limits of the trailer or trailer towing equipment. Improper loading can result in damage to your vehicle and/or personal injury. Check weights and loading at a commercial scale or highway patrol office equipped with scales.**
- **An improperly loaded trailer can cause loss of vehicle control.**

✻ NOTICE

With increasing altitude the engine performance decreases. From 1,000m above sea level and for every 1,000m thereafter 10% of vehicle/trailer weight (trailer weighter + gross vehicle weight) must be deducted.

VEHICLE WEIGHT

This section will guide you in the proper loading of your vehicle and/or trailer, to keep your loaded vehicle weight within its design rating capability, with or without a trailer. Properly loading your vehicle will provide maximum return of the vehicle design performance. Before loading your vehicle, familiarize yourself with the following terms for determining your vehicle's weight ratings, with or without a trailer, from the vehicle's specifications and the certification label:

Base curb weight

This is the weight of the vehicle including a full tank of fuel and all standard equipment. It does not include passengers, cargo, or optional equipment.

Vehicle curb weight

This is the weight of your new vehicle when you picked it up from your dealer plus any aftermarket equipment.

Cargo weight

This figure includes all weight added to the Base Curb Weight, including cargo and optional equipment.

GAW (Gross axle weight)

This is the total weight placed on each axle (front and rear) - including vehicle curb weight and all payload.

GAWR (Gross axle weight rating)

This is the maximum allowable weight that can be carried by a single axle (front or rear). These numbers are shown on the certification label.
The total load on each axle must never exceed its GAWR.

GVW (Gross vehicle weight)

This is the Base Curb Weight plus actual Cargo Weight plus passengers.

GVWR (Gross vehicle weight rating)

This is the maximum allowable weight of the fully loaded vehicle (including all options, equipment, passengers and cargo). The GVWR is shown on the certification label.

Overloading

⚠ WARNING

■ Vehicle weight

The gross axle weight rating (GAWR) and the gross vehicle weight rating (GVWR) for your vehicle are on the certification label attached to the driver's (or front passenger's) door. Exceeding these ratings can cause an accident or vehicle damage. You can calculate the weight of your load by weighing the items (and people) before putting them in the vehicle. Be careful not to overload your vehicle.

What to do in an emergency

Road warning....7-02
Hazard warning flasher....7-02
In case of an emergency while driving....7-03
If the engine stalls at a crossroad or crossing....7-03
If you have a flat tire while driving....7-03
If engine stalls while driving....7-03
If the engine will not start....7-04
If engine doesn't turn over or turns over slowly....7-04
If engine turns over normally but does not start....7-04
Emergency starting....7-05
Before Jump Starting (For Hybrid)....7-05
Method to disconnect the (-) cable for regular maintenance (For Hybrid)....7-06
Jump starting....7-07
Push-starting....7-09
If the engine overheats....7-10
Tire pressure monitoring system (TPMS)....7-11
Check tire pressure....7-11
Low tire pressure telltale....7-12
TPMS (Tire Pressure Monitoring System) mal-function indicator....7-13
Changing a tire with TPMS....7-14
If you have a flat tire (with spare tire)....7-17
Jack and tools....7-17
Removing and storing the spare tire....7-18
Changing tires....7-18
Jack label....7-24
EC declaration of conformity for jack....7-25
If you have a flat tire (with Tire Mobility Kit)....7-26
Introduction....7-27
Components of the Tire Mobility Kit (TMK)....7-29
Using the TMK....7-30
Distributing the sealant....7-31
Checking the tire inflation pressure....7-32
Notes on the safe use of the Tire Mobility Kit....7-33
Tire Mobility Kit Technical Data....7-33
Towing....7-34
Towing service....7-34
Removable towing hook....7-35
Emergency towing....7-35
If an accident occurs....7-38
Emergency commodity....7-39
Fire extinguisher....7-39
First aid kit....7-39
Triangle reflector....7-39
Tire pressure gauge....7-39

ROAD WARNING

Hazard warning flasher

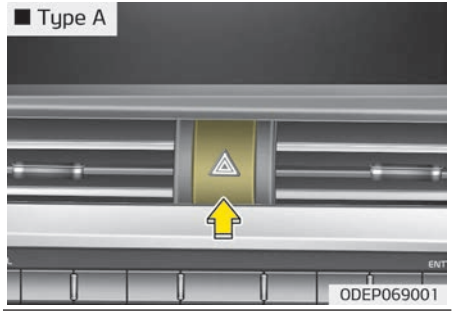

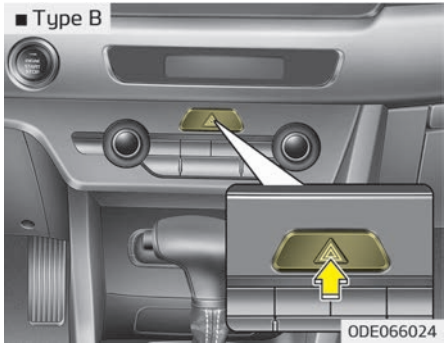

The hazard warning flasher serves as a warning to other drivers to exercise extreme caution when approaching, overtaking, or passing your vehicle.

It should be used whenever emergency repairs are being made or when the vehicle is stopped near the edge of a roadway.
Depress the flasher switch with the ignition switch in any position. The flasher switch is located in the center console switch panel. All turn signal lights will flash simultaneously.

- The hazard warning flasher operates whether your vehicle is running or not.
- The turn signals do not work when the hazard flasher is on.
- Care must be taken when using the hazard warning flasher while the vehicle is being towed.

IN CASE OF AN EMERGENCY WHILE DRIVING

If the engine stalls at a crossroad or crossing

If the engine stalls at a crossroad or crossing, set the shift lever in the N (Neutral) position and then push the vehicle to a safe place.

If you have a flat tire while driving

If a tire goes flat while you are driving:

1. Take your foot off the accelerator pedal and let the vehicle slow down while driving straight ahead. Do not apply the brakes immediately or attempt to pull off the road as this may cause a loss of control. When the vehicle has slowed down to such a speed that it is safe to do so, brake carefully and pull off the road. Drive off the road as far as possible and park on a firm level ground. If you are on a divided highway, do not park in the median area between the two traffic lanes.
2. When the vehicle is stopped, turn on your emergency hazard flashers, set the parking brake and put the transmission in P (dual clutch transmission).
3. Have all passengers get out of the vehicle. Be sure they all get out on the side of the vehicle that is away from traffic.
4. When changing a flat tire, follow the instruction provided later in section "If you have a flat tire (with spare tire)" on page 7-17 or "If you have a flat tire (with Tire Mobility Kit)" on page 7-26.

If engine stalls while driving

1. Reduce your speed gradually, keeping a straight line. Move cautiously off the road to a safe place.
2. Turn on your emergency flashers.
3. Try to start the engine again. If your vehicle does not start, consult a professional workshop. Kia recommends to consult an authorized Kia dealer/service partner.

IF THE ENGINE WILL NOT START

If engine doesn't turn over or turns over slowly

1. If your vehicle has an dual clutch transmission, be sure the shift lever is in N (Neutral) or P (Park) and the emergency brake is set.
2. Check the battery connections to be sure they are clean and tight.
3. Turn on the interior light. If the light dims or goes out when you operate the starter, the battery is discharged.
4. Check the starter connections to be sure they are securely tightened.
5. Do not push or pull the vehicle to start it. See instructions for "Jump starting" on page 7-07.

⚠ WARNING

If the engine will not start, do not push or pull the vehicle to start it. This could result in a collision or cause other damage. In addition, push or pull starting may cause the catalytic converter to be overloaded and create a fire hazard.

If engine turns over normally but does not start

1. Check the fuel level.
2. With the ignition switch in the LOCK position, check all connectors at the ignition coils and spark plugs. Reconnect any that may be disconnected or loose.
3. Check the fuel line in the engine compartment.
4. If the engine still does not start, call a professional workshop. Kia recommends to call an authorized Kia dealer/service partner.

EMERGENCY STARTING

Before Jump Starting (For Hybrid)

Over discharge of 12V battery

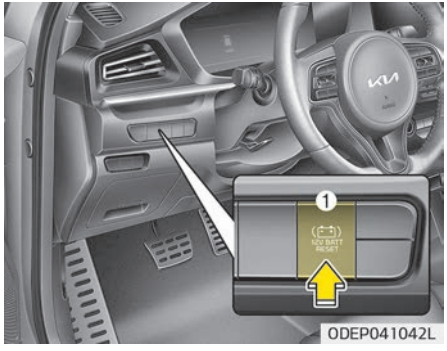

- Press the reconnection ("12V Batt Reset") switch (1):

This car has a reconnection switch which can reset the over discharged 12V battery and enable getting the car started without jump-start.

- Press the "12V Batt Reset" switch (1) located on the lower left dash.
- Immediately start car by stepping on the brake pedal and pressing the Start switch within few seconds.
- To charge 12V battery, keep driving or idling the car more than 30 minutes.

If you do not start the vehicle immediately after pressing the "12V Batt Reset" switch (1), the power of 12V battery is automatically disconnected after few seconds to save the 12V battery from additional discharge. If the 12V battery is disconnected prior to starting the vehicle, press "12V Batt Reset" switch (1) again and then immediately start the car as explained above.
Repeated use of the "12V Batt Reset" switch (1) without a sufficient engine ON cycle (30 Min+) may cause over discharge of the 12V battery, which will prevent car starting. If the 12V battery is over discharged to a point that the reset does not work, try to jump-start the vehicle. (refer to jump-starting)
After starting the vehicle (HEV Ready), the 12V battery is being charged whether the engine is running or not. Although there is no engine-sound, it is not necessary to step on the accelerator pedal. Once the 12V battery is fully discharged and reconnected, the 12V battery is initialized.

Items should be reset after the battery has been discharged or the battery has been disconnected.

- Auto up/down window
- Sunroof
- Trip computer
- Climate control system
- Driver position Memory System
- Audio

As explained above, if the vehicle cannot be started after pressing the "12V Batt Reset" switch (1) due to over discharge, try to jump-start (refer to Jump-starting).

Charging method for 12V battery

A- It is recommended to charge the 12V battery by starting and running the vehicle (HEV Ready Mode) for a minimum of 30 minutes if a 12V reset, or jump start has been used.

B- If you cannot start the vehicle :

- After connecting the jumper cables at the recommended locations, you should press "12V Batt Reset" switch (1) to charge the battery.

- The voltage range of the charger should be 13.3~14V and its current range should be less than 60A. (13.8V is recommended).

⚠ CAUTION

- **The use of an improper charger with a voltage and current range higher than specified may cause overheating and damage to the 12V battery.**
- **The use of an incorrect charger will lead to a power shut-off to save the 12V battery. Stop using the incorrect charger once the power of the vehicle is shut off.**

External power source using 12V battery (Except the use of dash cameras)

The use of external power accessories may reduce performance and function of the vehicle. Especially, the use of dash cameras may cause a shut off the power of the vehicle prior to the dash camera's automatic shut-down.

If the power of the car is shut off, start the vehicle as explained above (refer to "Over discharge of 12V battery" on page 1-43) .

Method to disconnect the (-) cable for regular maintenance (For Hybrid)

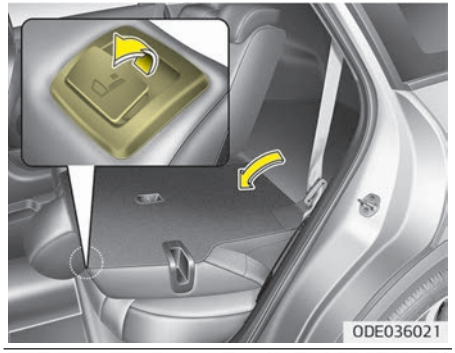
ODE036021

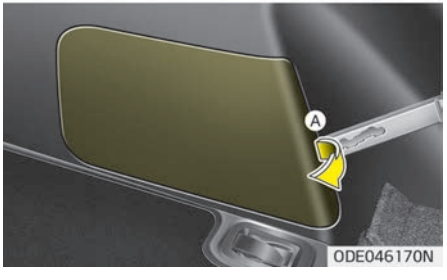

ODE046170N

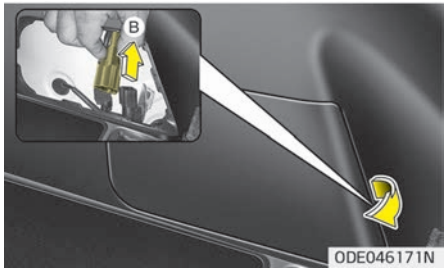

When the vehicle is under regular maintenance, make sure to separate the (-) cable inside the luggage room before maintenance.
Procedures to separate the (-) cable is as below:

- Fold the rear left side seat.
- Using the key or (-) screwdriver, remove the service cover (A) on the luggage trim.
- Separate the (-) cable (B).
  Reassemble in the reverse order of disassembly.

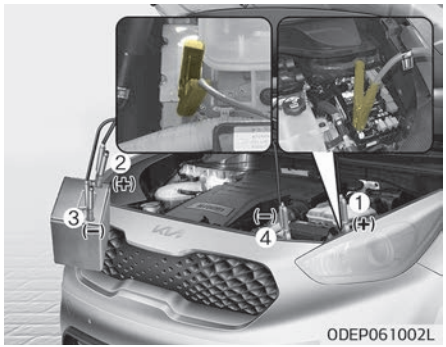

Connect cables in numerical order and disconnect in reverse order.

Jump starting

Jump starting can be dangerous if done incorrectly. Therefore, to avoid harm to yourself or damage to your vehicle or battery, follow the jump starting procedures. If in doubt, we strongly recommend that you have a competent technician or towing service jump start your vehicle.

⚠ CAUTION

Use only a 12-volt jumper system. You can damage a 12-volt starting motor, ignition system, and other electrical parts beyond repair by use of a 24- volt power supply (either two 12-volt batteries in series or a 24-volt motor generator set).

⚠ CAUTION

Do not jump start another vehicle with your hybrid vehicle. Jump starting another vehicle will damage the hybrid vehicle's 12 volt battery (lithium polymer type).

⚠ WARNING

■ Battery

Never attempt to check the electrolyte level of the battery as this may cause the battery to rupture or explode causing serious injury.

⚠ WARNING

■ Battery

- **Keep all flames or sparks away from the battery. The battery produces hydrogen gas which may explode if exposed to flame or sparks.**
  If these instructions are not followed exactly, serious personal injury and damage to the vehicle may occur! If you are not sure how to follow this procedure, seek qualified assistance. Automobile batteries contain sulfuric acid. This is poisonous and highly corrosive. When jump starting, wear protective glasses and be careful not to get acid on yourself, your clothing or on the vehicle.
- **Do not attempt to jump start the vehicle if the discharged battery is frozen or if the electrolyte level is low; the battery may rupture or explode.**
- **Do not allow the (+) and (-) jumper cables to touch. It may cause sparks.**

(Continued)

(Continued)

- **The battery may rupture or explode when you jump start with a low or frozen battery.**

Jump starting procedure

1. Make sure the booster battery is 12-volt and that its negative terminal is grounded.
2. If the booster battery is in another vehicle, do not allow the vehicles come in contact.
3. Turn off all unnecessary electrical loads.
4. Connect the jumper cables in the exact sequence shown in the illustration. First connect one end of a jumper cable to the positive terminal of the fuse box (1), then connect the other end to the positive terminal on the booster battery (2).
   Proceed to connect one end of the other jumper cable to the negative terminal of the booster battery (3), then the other end to a solid, stationary, metallic point (for example, the engine lifting bracket) away from the fuse box (4). Do not connect it to or near any part that moves when the engine is cranked.
   Do not allow the jumper cables to contact anything except the correct battery terminals or the correct ground. Do not lean over the battery when making connections.

⚠ CAUTION

■ Battery cables

Do not connect the jumper cable from the negative terminal of the booster battery to the negative terminal of the discharged battery. This can cause the discharged battery to overheat and crack, releasing battery acid.
Make sure to connect one end of the jumper cable to the negative terminal of the booster battery, and the other end to a metallic point, far away from the battery.

5. Start the engine of the vehicle with the booster battery and let it run at 2,000 rpm, then start the engine of the vehicle with the discharged battery.

If the cause of your battery discharging is not apparent, have the system checked by a professional workshop. Kia recommends to visit an authorized Kia dealer/service partner.

Push-starting

Vehicles equipped with dual clutch transmission cannot be push-started. Follow the directions in "Jump starting" on page 7-07.

⚠ WARNING

Never tow a vehicle to start it because the sudden surge forward when the engine starts could cause a collision with the tow vehicle.

IF THE ENGINE OVERHEATS

If your temperature gauge indicates overheating, you will experience a loss of power, or hear loud pinging or knocking, the engine is probably too hot. If this happens, you should:

1. Pull off the road and stop as soon as it is safe to do so.
2. Place the shift lever in P (dual clutch transmission) and set the parking brake. If the air conditioning is on, turn it off.
3. If engine coolant is running out under the vehicle or steam is coming out from the hood, stop the engine. Do not open the hood until the coolant has stopped running or the steaming has stopped. If there is no visible loss of engine coolant and no steam, leave the engine running and check to be sure the engine cooling fan is operating. If the fan is not running, turn the engine off.
4. Check to see if the water pump drive belt is missing. If it is not missing, check to see that it is tight.
   If the drive belt seems to be satisfactory, check for coolant leaking from the radiator, hoses or under the vehicle. (If the air conditioning had been in use, it is normal for cold water to be draining from it when you stop).

⚠ WARNING

While the engine is running, keep hair, hands and clothing away from moving parts such as the fan and drive belts to prevent injury.

5. If the water pump drive belt is broken or engine coolant is leaking out, stop the engine immediately and call a professional workshop. Kia recommends to call an authorized Kia dealer/service partner.

⚠ WARNING

Do not remove the radiator cap when the engine is hot. This can allow coolant to blow out of the opening and cause serious burns.

6. If you cannot find the cause of the overheating, wait until the engine temperature has returned to normal. Then, if coolant has been lost, carefully add coolant to the reservoir to bring the fluid level in the reservoir up to the halfway mark.
7. Proceed with caution, keeping alert for further signs of overheating. If overheating happens again, call a professional workshop. Kia recommends to call an authorized Kia dealer/service partner.

⚠ CAUTION

- **Serious loss of coolant indicates there is a leak in the cooling system. In this case, have the system checked by a professional workshop. Kia recommends to visit an authorized Kia dealer/service partner.**
- **When the engine overheats from low engine coolant, suddenly adding engine coolant may cause cracks in the engine. To prevent damage, add engine coolant slowly in small quantities.**

TIRE PRESSURE MONITORING SYSTEM (TPMS) (IF EQUIPPED)

1. Low tire pressure telltale/TPMS malfunction indicator
2. Low tire pressure position telltale (Shown on the LCD display)

Check tire pressure

- You can check the tire pressure in the information mode on the cluster.
  - Refer to "User settings mode" on page 5-65.
- Tire pressure is displayed 1~2 minutes later after driving.
- If tire pressure is not displayed when the vehicle is stopped, "Drive to display" message displays. After driving, check the tire pressure.
- You can change the tire pressure unit in the user settings mode on the cluster.
  - psi, kpa, bar (Refer to "User settings mode" on page 5-65).

Each tire, including the spare (if provided), should be checked monthly when cold and inflated to the inflation pressure recommended by the vehicle manufacturer on the vehicle placard or tire inflation pressure label.
(If your vehicle has tires of a different size than the size indicated on the vehicle placard or tire inflation pressure label, you should determine the proper tire inflation pressure for those tires.)

As an added safety feature, your vehicle has been equipped with a tire pressure monitoring system (TPMS) that illuminates a low tire pressure telltale when one or more of your tires is significantly under-inflated. Accordingly, when the low tire pressure telltale illuminates, you should stop and check your tires as soon as possible, and inflate them to the proper pressure. Driving on a significantly under-inflated tire causes the tire to overheat and can lead to tire failure. Under-inflation also reduces fuel efficiency and tire tread life, and may affect the vehicle's handling and stopping ability.
Please note that the TPMS is not a substitute for proper tire maintenance, and it is the driver's responsibility to maintain correct tire pressure, even if under-inflation has not reached the level to trigger illumination of the TPMS low tire pressure telltale.

Your vehicle has also been equipped with a TPMS malfunction indicator to indicate when the system is not operating properly. The TPMS malfunction indicator is combined with the low tire pressure telltale. When the system detects a malfunction, the telltale will flash for approximately 1 minute and then remain continuously illuminated. This sequence will continue upon subsequent vehicle start-ups as long as the malfunction exists. When the TPMS malfunction indicator remains illuminated after blinking for approximately 1 minute, the system may not be able to detect or signal low tire pressure as intended.
TPMS malfunctions may occur for a variety of reasons, including the installation of replacement or alternate tires or wheels on the vehicle that prevent the TPMS from functioning properly. Always check the TPMS malfunction telltale after replacing one or more tires or wheels on your vehicle to ensure that the replacement or alternate tires and wheels allow the TPMS to continue to function properly.

✻ NOTICE

If any of the below happens, have the system checked by a professional workshop. Kia recommends to visit an authorized Kia dealer/service partner.

1. The low tire pressure telltale/ TPMS malfunction indicator do not illuminate for 3 seconds when the ignition switch is turned to the ON position or engine is running.
2. The TPMS malfunction indicator remains illuminated after blinking for approximately 1 minute.
3. The Low tire pressure position telltale remains illuminated.

Low tire pressure telltale

When the tire pressure monitoring system warning indicators are illuminated and warning massage displayed on the cluster LCD display, one or more of your tires is significantly under-inflated. The low tire pressure position telltale light will indicate which tire is significantly under-inflated by illuminating the corresponding position light.

If either telltale illuminates, immediately reduce your speed, avoid hard cornering and anticipate increased stopping distances. You should stop and check your tires as soon as possible. Inflate the tires to the cold tire recommended pressure as indicated on the vehicle's placard or tire inflation pressure label located on the driver's side center pillar outer panel. Refer to "Tires and wheels" on page 8-46. If you cannot reach a service station or if the tire cannot hold the newly added air, replace the low pressure tire with a spare tire.

If you drive the vehicle for about 10 minutes at speeds above 25 km/h after replaceing the low pressure tire with the spare tire, one of the following will happen:

- The TPMS malfunction indicator may blink for approximately 1 minute and then remain continuously illuminated because the TPMS sensor is not mounted on the spare wheel. (changed tire equipped with a sensor not in the vehicle)
- The TPMS malfunction indicator will remain continuously illuminated while driving because the TPMS sensor is not mounted on the spare wheel. (changed tire equipped with a sensor in the vehicle)

⚠ CAUTION

- **In winter or cold weather, the low tire pressure telltale may illuminate if the tire pressure was adjusted to the recommended tire inflation pressure in warm weather. It does not mean your TPMS is malfunctioning because the decreased temperature leads to a lowering of tire pressure.**
- **When you drive your vehicle from a warm area to a cold area or from a cold area to a warm area, or the outside temperature is higher or lower, you should check the tire inflation pressure and adjust the tires to the recommended tire inflation pressure.**
- **When filling tires with more air, conditions to turn off the low tire pressure telltale may not be met. This is because a tire inflator has a margin of error in performance. The low tire pressure telltale will be turned off if the tire pressure is above the recommended tire inflation pressure.**

⚠ WARNING

■ Low pressure damage

Significantly low tire pressure makes the vehicle unstable and can contribute to loss of vehicle control and increased braking distances.
Continued driving on low pressure tires can cause the tires to overheat and fail.

TPMS (Tire Pressure Monitoring System) malfunction indicator

The TPMS malfunction indicator will illuminate after it blinks for approximately one minute when there is a problem with the Tire Pressure Monitoring System.
In this case, have the system checked by a professional workshop to determine the cause of the problem. Kia recommends to visit an authorized Kia dealer/service partner.

✻ NOTICE

If there is a malfunction with the TPMS, the low tire pressure position telltale will not be displayed even though the vehicle has an underinflated tire.

⚠ CAUTION

- **The TPMS malfunction indicator may blink for approximately 1 minute and then remain continuously illuminated if the vehicle is moving around electric power supply cables or radios transmitter such as at police stations, government and public offices, broadcasting stations, military installations, airports, or transmitting towers, etc. This can interfere with normal operation of the Tire Pressure Monitoring System (TPMS).**

(Continued)

(Continued)

- **The TPMS malfunction indicator may blink for approximately 1 minute and then remain continuously illuminated if snow chains are used or some separate electronic devices such as notebook computer, mobile charger, remote starter or navigation etc., are used in the vehicle.**
  This can interfere with normal operation of the Tire Pressure Monitoring System (TPMS).

Changing a tire with TPMS

If you have a flat tire, the low Tire Pressure and Position telltales will come on. In this case, have the system checked by a professional workshop. Kia recommends to visit an authorized Kia dealer/service partner.

⚠ CAUTION

We recommend that you use the sealant approved by Kia.

(Continued)

(Continued)

The sealant on the tire pressure sensor and wheel shall be eleminated when you replace the tire with a new one.

Each wheel is equipped with a tire pressure sensor mounted inside the tire behind the valve stem. You must use TPMS specific wheels. Have your tires serviced by a professional workshop. Kia recommends to visit an authorized Kia dealer/service partner.
If you drive the vehicle for about 10 minutes at speeds above 25 km/h after replaceing the low pressure tire with the spare tire, one of the following will happen:

- The TPMS malfunction indicator may blink for approximately 1 minute and then remain continuously illuminated because the TPMS sensor is not mounted on the spare wheel. (changed tire equipped with a sensor not in the vehicle)
- The TPMS malfunction indicator will remain continuously illuminated while driving because the TPMS sensor is not mounted on the spare wheel. (changed tire equipped with a sensor in the vehicle)

You may not be able to identify a low tire by simply looking at it. Always use a good quality tire pressure gauge to measure the tire's inflation pressure. Please note that a tire that is hot (from being driven) will have a higher pressure measurement than a tire that is cold (from sitting stationary for at least 3 hours and driven less than 1.6 km (1 mile) during that 3 hour period).
Allow the tire to cool before measuring the inflation pressure. Always be sure the tire is cold before inflating to the recommended pressure.
A cold tire means the vehicle has been sitting for 3 hours and driven for less than 1 mile (1.6 km) in that 3 hour period.

⚠ CAUTION

We recommend that you use the sealant approved by Kia if your vehicle is equipped with a Tire Pressure Monitoring System. The liquid sealant can damage the tire pressure sensors.

⚠ WARNING

■ TPMS

- **The TPMS cannot alert you to severe and sudden tire damage caused by external factors such as nails or road debris.**
- **If you feel any vehicle instability, immediately take your foot off the accelerator, apply the brakes gradually and with light force, and slowly move to a safe position off the road.**

⚠ WARNING

■ Protecting TPMS

Tampering with, modifying, or disabling the Tire Pressure Monitoring System (TPMS) components may interfere with the system's ability to warn the driver of low tire pressure conditions and/or TPMS malfunctions. Tampering with, modifying, or disabling the Tire Pressure Monitoring System (TPMS) components may void the warranty for that portion of the vehicle.

⚠ WARNING

■ For EUROPE

- **Do not modify the vehicle, it may interfere with the TPMS function.**
- **The wheels on the market do not have a TPMS sensor.**
  For your safety, use parts for replacement from a professional workshop. Kia recommends to visit an authorized Kia dealer/service partner.
- **If you use the wheels on the market, use a TPMS sensor approved by an authorized Kia dealer.**
  If your vehicle is not equipped with a TPMS sensor or TPMS does not work properly, you may fail the periodic vehicle inspection conducted in your country.

❋ All vehicles sold in the EUROPE market during below period must be equipped with TPMS.
- **New model vehicle:**
  Nov. 1, 2012~

(Continued)

(Continued)

- **Current model vehicle: Nov. 1, 2014~ (Based on vehicle registrations)**

IF YOU HAVE A FLAT TIRE (WITH SPARE TIRE) (IF EQUIPPED)

Jack and tools

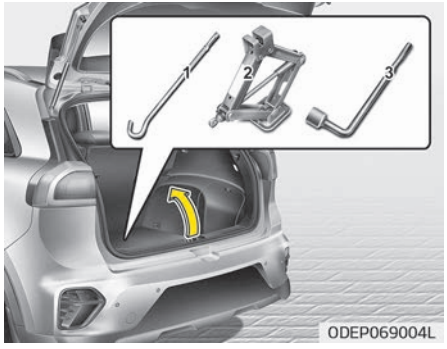

The jack, jack handle, wheel lug nut wrench are stored in the luggage compartment.
Pull up the luggage box cover to reach this equipment.

1. Jack handle
2. Jack
3. Wheel lug nut wrench

Jacking instructions

The jack is provided for emergency tire changing only.

To prevent the jack from "rattling" while the vehicle is in motion, store it properly.
Follow jacking instructions to reduce the possibility of personal injury.

⚠ WARNING

■ Changing tires

- **Never attempt vehicle repairs in the traffic lanes of a public road or highway.**
- **Always move the vehicle completely off the road and onto the shoulder before trying to change a tire. The jack should be used on firm level ground. If you cannot find a firm level place off the road, call a towing service company for assistance.**
- **Be sure to use the correct front and rear jacking positions on the vehicle; never use the bumpers or any other part of the vehicle for jacking support.**

(Continued)

(Continued)

- **The vehicle can roll off the jack causing serious injury or death.**
- **Do not get under a vehicle that is supported by a jack.**
- **Do not start or run the engine while the vehicle is on the jack.**
- **Do not allow anyone remain in the vehicle while it is on the jack.**
- **Make sure any children present are in a secure place away from the road and from the vehicle to be raised with the jack.**

Removing and storing the spare tire

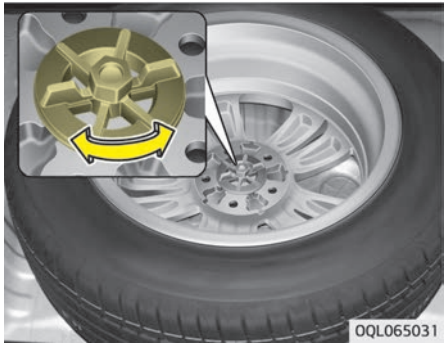

Turn the tire hold-down wing bolt counterclockwise.
Store the tire in the reverse order of removal.
To prevent the spare tire and tools from "rattling" while the vehicle is in motion, store them properly.

If it is hard to loosen the tire hold-down wing bolt by hand, you can loosen it easily using the jack handle.

1. Put the jack handle (1) inside of the tire hold-down wing bolt.
2. Turn the tire hold-down wing bolt counterclockwise with the jack handle.

⚠ WARNING

Ensure the spare tire retainer is properly aligned with the center of
(Continued)

(Continued)

the spare tire to prevent the spare tire from "rattling".
Otherwise, it may cause the spare tire to fall off the carrier and lead to an accident.

Changing tires

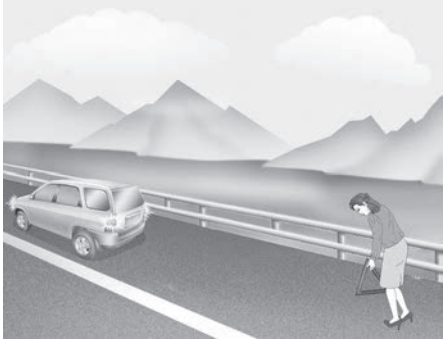

1. Park on a level surface and apply the parking brake firmly.
2. Shift the shift lever into P (Park) with dual clutch transmission.
3. Activate the hazard warning flasher.

4. Remove the wheel lug nut wrench, jack, jack handle, and spare tire from the vehicle.
5. Block both the front and rear of wheel that is diagonally opposite the jack position.

⚠ WARNING

■ Changing a tire
(Continued)

(Continued)

- **To prevent vehicle movement while changing a tire, always set the parking brake fully, and always block the wheel diagonally opposite the wheel being changed.**
- **We recommend that the wheels of the vehicle be chocked, and that no person remain in a vehicle that is being jacked.**

6. Loosen the wheel lug nuts counterclockwise one turn each, but do not remove any nut until the tire has been raised off the ground.

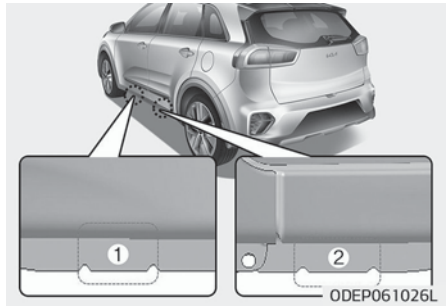

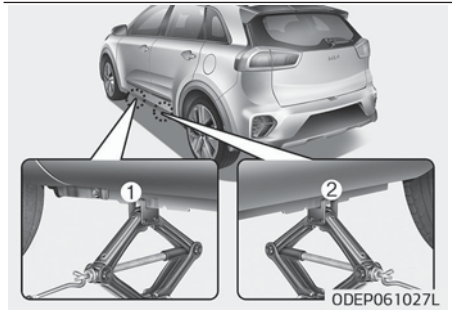

7. Place the jack at the front (1) or rear (2) jacking position closest to the tire you are changing. Place the jack at the designated locations under the frame. The jacking positions are plates welded to the frame with two tabs and a raised dot to index with the jack.

⚠ WARNING

■ Jack location

To reduce the possibility of injury, be sure to use only the jack provided with the vehicle and in the correct jack position; never use any other part of the vehicle for jack support.

8. Insert the jack handle into the jack and turn it clockwise, raising the vehicle until the tire just clears the ground. This measurement is approximately 30 mm (1.2 in). Before removing the wheel lug nuts, make sure the vehicle is stable and that there is no chance for movement or slippage.
9. Loosen the wheel nuts and remove them with your fingers. Slide the wheel off the studs and lay it flat so it cannot roll away. To put the wheel on the hub, pick up the spare tire, line up the holes with the studs and slide the wheel onto them.
   If this is difficult, tip the wheel slightly and get the top hole in the wheel lined up with the top stud. Then jiggle the wheel back and forth until the wheel can be slid over the other studs.

⚠ WARNING

Wheels may have sharp edges. Handle them carefully to avoid possible severe injury. Before putting the wheel into place, be sure that there is nothing on the hub or wheel (such as mud, tar, gravel, etc.) that interferes with the wheel from fitting solidly against the hub.
If there is, remove it. If there is not good contact on the mounting surface between the wheel and hub,
(Continued)

(Continued)

the wheel nuts could come loose and cause the loss of a wheel. Loss of a wheel may result in loss of control of the vehicle. This may cause serious injury or death.

10. To reinstall the wheel, hold it on the studs, put the wheel nuts on the studs and tighten them finger tight. Jiggle the tire to be sure it is completely seated, then tighten the nuts as much as possible with your fingers again.
11. Lower the vehicle to the ground by turning the wheel nut wrench counterclockwise.

Then position the wrench as shown in the drawing and tighten the wheel nuts. Be sure the socket is seated completely over the nut. Do not stand on the wrench handle or use an extension pipe over the wrench handle. Go around the wheel tightening every other nut until they are all tight. Then double-check each nut for tightness. After changing wheels, have the system checked by a professional workshop. Kia recommends to visit an authorized Kia dealer/service partner.

Wheel nut tightening torque:

Steel wheel & aluminum alloy wheel: 11~13 kgf·m (79~94 lbf·ft)

If you have a tire gauge, remove the valve cap and check the air pressure. If the pressure is lower than recommended, drive slowly to the nearest service station and inflate to the correct pressure. If it is too high, adjust it until it is correct. Always reinstall the valve cap after checking or adjusting tire pressure. If the cap is not replaced, air may leak from the tire. If you lose a valve cap, buy another and install it as soon as possible.

After you have changed wheels, always secure the flat tire in its place and return the jack and tools to their proper storage locations.

⚠ CAUTION

Your vehicle has metric threads on the wheel studs and nuts. Make certain during wheel removal that the same nuts that were removed are reinstalled - or, if replaced, that nuts with metric threads and the same chamfer configuration are used. Installation of a non-metric thread nut on a metric stud or vice-versa will not secure the wheel to the hub properly and will damage the stud so that it must be replaced.

(Continued)

(Continued)

Note that most lug nuts do not have metric threads. Be sure to use extreme care in checking for thread style before installing aftermarket lug nuts or wheels. If in doubt, consult a professional workshop. Kia recommends to consult an authorized Kia dealer/service partner.

⚠ WARNING

■ Wheel studs

If the studs are damaged, they may lose their ability to retain the wheel. This could lead to the loss of the wheel and a collision resulting in serious injuries.

To prevent the jack, jack handle, wheel lug nut wrench and spare tire from rattling while the vehicle is in motion, store them properly.

⚠ WARNING

■ Inadequate spare tire pressure

Check the inflation pressures as soon as possible after installing the spare tire. Adjust it to the specified pressure, if necessary. Refer to "Tires and wheels" on page 8-46.

Important - use of compact spare tire (if equipped)

Your vehicle is equipped with a compact spare tire. This compact spare tire takes up less space than a regular- size tire. This tire is smaller than a conventional tire and is designed for temporary use only.

⚠ CAUTION

- **You should drive carefully when the compact spare is in use. The compact spare should be replaced by the proper conventional tire and rim at the first opportunity.**

(Continued)

(Continued)

- **The operation of this vehicle is not recommended with more than one compact spare tire in use at the same time.**

⚠ WARNING

The compact spare tire is for emergency use only. Do not operate your vehicle on this compact spare at the speed over 80 km/h (50 mph). The original tire should be repaired or replaced as soon as possible to avoid failure of the spare possibly leading to personal injury or death.

The compact spare should be inflated to 420 kPa (60 psi).

✻ NOTICE

Check the inflation pressure after installing the spare tire. Adjust it to the specified pressure, as necessary.

When using a compact spare tire, observe the following precautions:

- Under no circumstances should you exceed 80 km/h (50 mph); a higher speed could damage the tire.
- Ensure that you drive slowly enough to avoid all hazards. Any road hazard, such as a pothole or debris, could seriously damage the compact spare.
- Any continuous road use of this tire could result in tire failure, loss of vehicle control, and possible personal injury.
- Do not exceed the vehicle's maximum load rating or the load-carrying capacity shown on the sidewall of the compact spare tire.
- Avoid driving over obstacles. The compact spare tire diameter is smaller than the diameter of a conventional tire and reduces the ground clearance approximately 2.5 cm (1 inch), which could result in damage to the vehicle.
- Do not take the vehicle through an automatic car wash while the compact spare tire is installed.
- Do not use tire chains on the temporary compact tire. Because of the smaller size, a tire chain will not fit properly. This could damage the vehicle and result in loss of the chain.

- Temporary compact tire should not be installed on the front axle if the vehicle must be driven in snow or on ice.
- Do not use the temporary compact tire on any other vehicle because this tire has been designed especially for your vehicle.
- The temporary compact tire tread life is shorter than a regular tire. Inspect your temporary compact tire regularly and replace worn compact spare tires with the same size and design, mounted on the same wheel.
- The temporary compact tire should not be used on any other wheels, nor should standard tires, snow tires, wheel covers or trim rings be used with the temporary compact spare wheel. If such use is attempted, damage to these items or other car components may occur.
- Do not use more than one temporary compact tire at a time.
- Do not tow a trailer while the temporary compact tire is installed.

Jack label

■ Example

• Type A

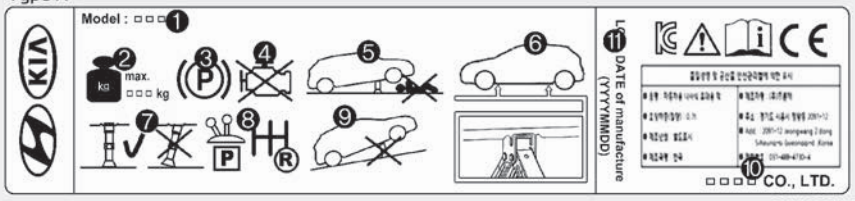

OHYK064001

• Type B

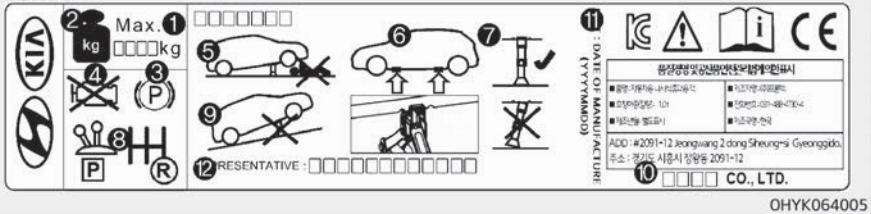

OHYK064005

• Type C

OHYK064002

❊ The actual jack label in the vehicle may differ from the illustration. For more detailed specifications, refer to the label attached to the jack.

1. Model name
2. Maximum allowable load
3. When using the jack, set your parking brake.
4. When using the jack, stop the engine.
5. Do not get under a vehicle that is supported by a jack.
6. The designated locations under the frame.
7. When supporting the vehicle, the base plate of jack must be vertical under the lifting point.
8. Move the shift lever to the P position on vehicles with dual clutch transmission.
9. The jack should be used on firm level ground.
10. Jack manufacturer
11. Production date
12. Representative company and address

EC declaration of conformity for jack

CE

EC Declaration of Conformity
according to EC Machinery Directive 2006/42/EC

We, **FRONTEC CO., LTD.**
2091-12 Jeongwang 2(i)-dong Siheung-si Gyeonggi-d ,Korea
declare under our sole responsibility that the product

Product : JACK-ASSY
Type Designation(s) : 1200KG, 1000KG, 800KG, 700KG, 500KG
Serial No. : N/A (prototype)
Year of Manufacture : 2013
to which this declaration relates is in conformity with the following standard(s) or other normative document(s);

EN ISO12100 (2010)	Safety of machinery - General principles for design – Risk assessment and risk reduction
EN 1494/A1 (2008)	Mobile or movable jacks and associated lifting equipment

following the provisions of Directive(s);

2006/42/EC	Directive on the approximation of the laws of Member States relating to machinery (OJ L157 Jun, 9, 2006)

Siheung-si Gyeonggi-d ,Korea / 15.07.2013 SOO HONG, MIN President
(Place and date of issue)(Name and signature or equivalent making of authorized person)

* T.C.F Compiling Location:
- Address: PRIBORSKA 280, 739 42 FRYDEK MISTEK,CHLEBOVICE, CZECH REPUBLIC
- Team: Purchase team
- Company name: HANWHA L&C CZECH s.r.o

OUM074110L

IF YOU HAVE A FLAT TIRE (WITH TIRE MOBILITY KIT) (IF EQUIPPED)

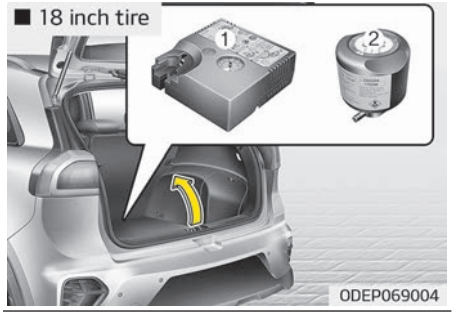

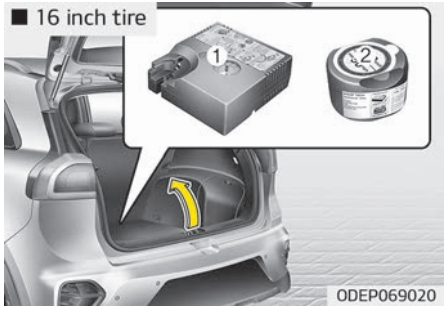

Please read the instructions before using the Tire Mobility Kit.

1. Compressor
2. Sealant bottle

The Tire Mobility Kit is a temporary fix to the tire and have the tire inspected by a professional workshop as soon as possible. Kia recommends to visit an authorized Kia dealer/service partner.

⚠ CAUTION

■ One sealant for one tire

When two or more tires are flat, do not use the tire mobility kit because the one supplied canister of sealant in the Tire Mobility Kit is to only enough sealant for one flat tire.

⚠ WARNING

■ Tire wall

Do not use the Tire Mobility Kit to repair punctures in the tire walls. This can result in an accident due to tire failure.

⚠ WARNING

■ Temporary fix

(Continued)

(Continued)

Have your tire repaired as soon as possible. The tire may lose air pressure at any time after inflating with the Tire Mobility Kit.

⚠ CAUTION

- **When replacing or repairing the tire after using tire sealant, make certain to remove the sealant attached to the inner part of the tire, including the tire air pressure detection sensor and wheel. If the sealant is not removed, noise and vibration may occur, and the tire air pressure detection sensor may be damaged.**
- **We recommend use original Kia manufactured sealant. Using aftermarket sealant may damage the tire air pressure detection sensor.**

(Continued)

(Continued)

- **If the TPMS warning light illuminates after using the TMK, have your vehicle inspected by a professional workshop. Kia recommends to contact an authorized Kia dealer/service partner.**

Introduction

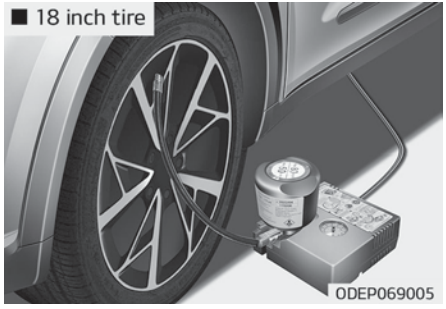

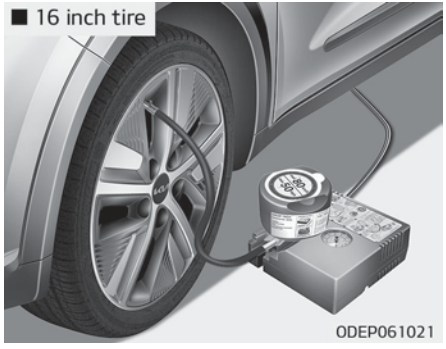

With the Tire Mobility Kit (TMK) you stay mobile even after experiencing a tire puncture.

The system of compressor and sealing compound effectively and comfortably seals most punctures in a passenger car tire caused by nails or similar objects and reinflates the tire.
After you ensured that the tire is properly sealed you can drive cautiously on the tire (up to 200 km (120 miles)) at a max. speed of 80 km/h (50 mph) in order to reach a vehicle or tire dealer to have the tire replaced.
It is possible that some tires, especially with larger punctures or damage to the sidewall, cannot be sealed completely.
Air pressure loss in the tire may adversely affect tire performance.
For this reason, you should avoid abrupt steering or other driving maneuvers, especially if the vehicle is heavily loaded or if a trailer is in use.
The TMK is not designed or intended as a permanent tire repair method and is to be used for one tire only.
This instruction shows you step by step how to temporarily seal the puncture simply and reliably.
Read the section "Notes on the safe use of the TMK" on page 7-33.

⚠ WARNING

Do not use the TMK if a tire is severely damaged by driving run flat or with insufficient air pressure.
Only punctured areas located within the tread region of the tire can be sealed using the TMK.

Components of the Tire Mobility Kit (TMK)

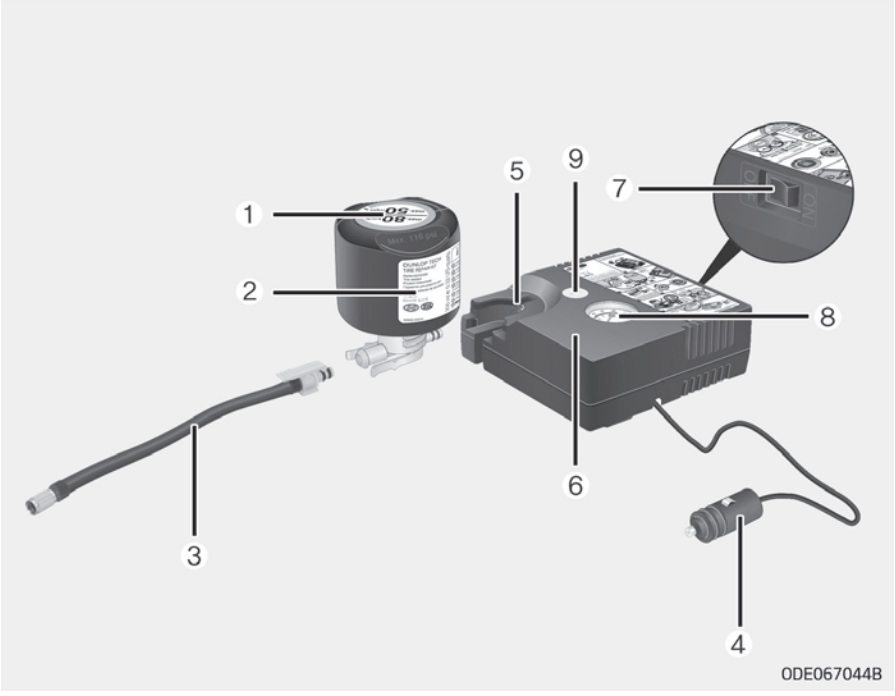

1. Speed restriction label
2. Sealant bottle and label with speed restriction
3. Filling hose from sealant bottle to wheel
4. Connectors and cable for the power outlet direct connection
5. Holder for the sealant bottle
6. Compressor
7. On/off switch
8. Pressure gauge for displaying the tire inflation pressure
9. Button for reducing tire inflation Pressure

Connectors, cable and connection hose are stored in the compressor housing.

⚠ WARNING

Before using the Tire Mobility Kit, follow the instructions on the sealant bottle.
Remove the label with the speed restriction from the sealant bottle and apply it to the steering wheel.
(Continued)

(Continued)

Please note the expiry date on the sealant bottle.

Using the TMK

1. Detach the speed restriction label (1) from the sealant bottle (2), and place it in a highly visible place inside the vehicle such as on the steering wheel to remind the driver not to drive too fast.

Carefully follow below steps.

2. Shake the sealant bottle.

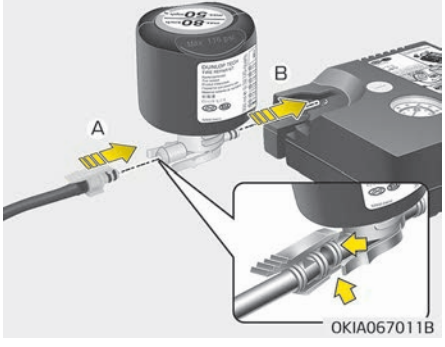

3. Connect the filling hose (3) onto the connector of the sealant bottle (A).

4. Ensure that button (9) on the compressor is not pressed.

5. Unscrew the valve cap from the valve of the flat tire and screw filling hose (3) of the sealant bottle onto the valve.
6. Insert the sealant bottle into the housing (5) of the compressor so that the bottle is upright.
7. Ensure that the compressor is switched off, position 0.

⚠ CAUTION

Securely install the sealant filling hose to the valve. If not, sealant may flow backward, possibly clogging the filling hose.

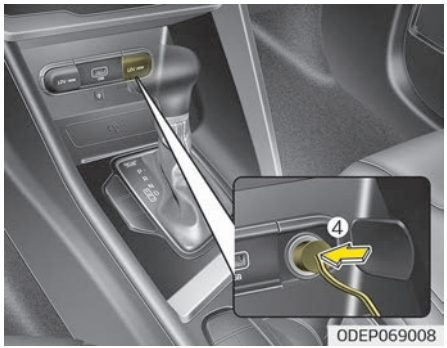

8. Connect between compressor and the vehicle power outlet using the cable and connectors (4).
9. With the ENGINE START/STOP button position on or ignition switch position on, switch on the compressor and let it run for approximately 5~7 minutes to fill the sealant up to cold tire recommended pressure. (refer to "Tires and wheels" on page 9-09). The inflation pressure of the tire after filling is unimportant and will be checked/corrected later.
   Be careful not to overinflate the tire and stay away from the tire when filling it.
   When the tire and wheel are damaged, do not use Tire Mobility Kit for your safety.

⚠ CAUTION

■ Tire pressure

Do not attempt to drive your vehicle if the tire pressure is below 250 kPa (36 psi/2.5 bar). This could result in an accident due to sudden tire failure.

10. Switch off the compressor.
11. Detach the hoses from the sealant bottle connector and from the tire valve.

Return the TMK to its storage location in the vehicle.

⚠ WARNING

■ Carbon monoxide

Carbon monoxide poisoning and suffocation is possible if the engine is left running in a poorly ventilated or unventilated location (such as inside a building).

Distributing the sealant

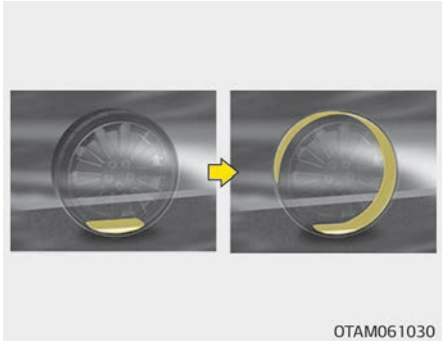

12. Immediately drive approximately 7~10 km (4~6 miles or about 10 min) to evenly distribute the sealant in the tire.

⚠ CAUTION

Do not exceed a speed of 60 km/h (35 mph). If possible, do not fall below a speed of 20 km/h (12 mph).
While driving, if you experience any unusual vibration, ride disturbance or noise, reduce your speed and drive with caution until you can safely pull off of the side of the road. Call for road side service or towing. Call for road side service or towing.
When you use the Tire Mobility Kit, the tire pressure sensors and wheel may be stained by sealant. Therefore, remove the tire pressure sensors and wheel stained by sealant and have the vehicle inspected at a professional workshop. Kia recommends to visit an authorized Kia dealer/service partner.

Checking the tire inflation pressure

1. After driving approximately 7~10 km (4~6 miles or about 10 minutes), stop at a suitable location.
2. Connect the filling hose (3) of the compressor (clip mounted side) directly and then connect the filling hose (3) (opposite side) to the tire valve.
3. Connect between compressor and the vehicle battery using the cable and connectors.
4. Adjust the tire inflation pressure to the cold tire recommended pressure as indicated on the vehicle's placard or tire inflation pressure label located on the driver's side center pillar outer panel. (In this owner's manual, refer to "Tires and Wheels" on page 9-09.)
   - To increase the inflation pressure: Switch on the compressor, position I. To check the current inflation pressure setting, briefly switch off the compressor.

⚠ WARNING

Do not let the compressor run for more than 10 minutes, otherwise the device will overheat and may be damaged.

   - To reduce the inflation pressure: Press the button (9) on the compressor.

⚠ CAUTION

If the inflation pressure is not maintained, drive the vehicle a second time, refer to Distributing the sealant. Then repeat steps 1 to 4.
Use of the TMK may be ineffectual for tire damage larger than approximately 4 mm (0.16 in).
Contact a professional workshop if the tire cannot be made roadworthy with the Tire Mobility Kit. Kia recommends to visit an authorized Kia dealer/service partner.

⚠ WARNING

The tire inflation pressure must be at least 250 kPa (36 psi/2.5 bar). If it is not, do not continue driving. Call for road side service or towing.

Notes on the safe use of the Tire Mobility Kit

- Park your car at the side of the road so that you can work with the TMK away from moving traffic. Place your warning triangle in a prominent place to make passing vehicles aware of your location.
- To be sure your vehicle will not move, even when you're on fairly level ground, always set your parking brake.
- Only use the TMK for sealing/inflation passenger car tires. Do not use on motorcycles, bicycles or any other type of tires.
- Do not remove any foreign objects, such as nails or screws, that have penetrated the tire.
- Before using the TMK, read the precautionary advice printed on the sealant bottle!
- Provided the car is outdoors, leave the engine running. Otherwise operating the compressor may eventually drain the car battery.
- Never leave the TMK unattended while it is being used.
- Do not leave the compressor running for more than 10 min. at a time or it may overheat.
- Do not use the TMK if the ambient temperature is below -30 °C (-22 °F).
- When the tire and wheel are damaged, do not use Tire Mobility Kit for your safety.

Tire Mobility Kit Technical Data

Technical Data	18 inch tire	16 inch tire
System voltage	DC 12 V	DC 12 V
Operating Voltage	DC 10 – 15 V	DC 10 – 15 V
Operating Current	MAX. 10 ± 1 A (at DC 12V operation)	MAX. 10 ± 1 A (at DC 12V operation)
Suitable for use at temperatures	- 30 ~ + 70 °C (-22 ~ + 158 °F)	- 30 ~ + 70 °C (-22 ~ + 158 °F)
Max. working pressure	6 bar (87 psi)	6 bar (87 psi)

Technical Data		18 inch tire	16 inch tire
Size	Compressor	161 x 150 x 55.8 mm (6.3 x 5.9 x 2.2 in.)	161 x 150 x 55.8 mm (6.3 x 5.9 x 2.2 in.)
	Sealant bottle	ø 85 x 104 mm (ø 3.3 x 4.1 in.)	ø 85 x 81 mm (ø 3.3 x 3.2 in.)
	Compressor weight	650 ± 30g (1.43 ± 0.07 lbs)	650 ± 30g (1.43 ± 0.07 lbs)
	Sealant volume	300 ml (18.3 cu. in)	200 ml (12.2 cu. in.)

❊ Sealant and spare parts can be obtained and replaced at an authorized vehicle or tire dealer. Empty sealant bottles may be disposed of at home. Liquid residue from the sealant should be disposed of by your vehicle or tire dealer or in accordance with local waste disposal regulations.

TOWING

Towing service

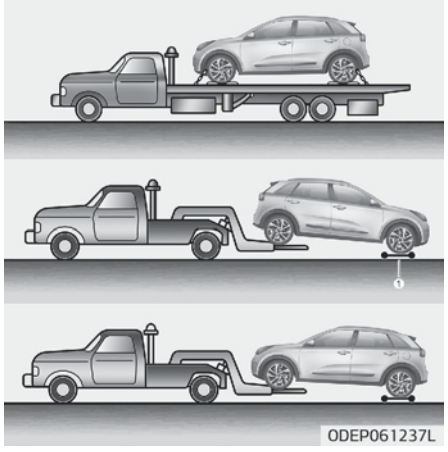

If emergency towing is necessary, we recommend having it done by an authorized Kia dealer or a commercial tow truck service. Proper lifting and towing procedures are necessary to prevent damage to the vehicle. The use of wheel dollies (1) or flatbed is recommended.

On FWD vehicles, it is acceptable to tow the vehicle with the rear wheels on the ground (without dollies) and the front wheels off the ground.
If any of the loaded wheels or suspension components are damaged or the vehicle is being towed with the front wheels on the ground, use a towing dolly under the front wheels.
When being towed by a commercial tow truck and wheel dollies are not used, the front of the vehicle should always be lifted, not the rear.

⚠ CAUTION

- **Do not tow the vehicle backwards with the front wheels on the ground as this may cause damage to the vehicle.**
- **Do not tow with sling-type equipment. Use wheel lift or flatbed equipment.**

When towing your vehicle in an emergency without wheel dollies:

1. Set the ignition switch in the ACC position.
2. Place the transmission shift lever in N (Neutral).
3. Release the parking brake.

⚠ CAUTION

Failure to place the transmission shift lever in N (Neutral) may cause internal damage to the transmission.

Removable towing hook (if equipped)

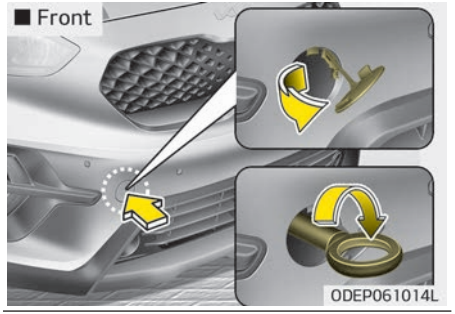

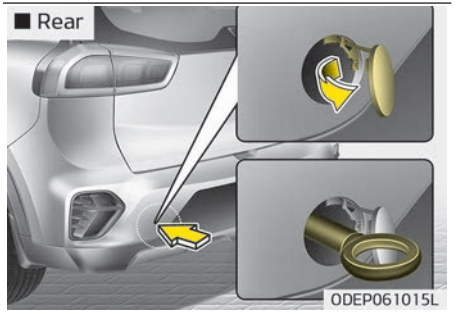

1. Open the tailgate, and remove the towing hook from the tool case.
2. Remove the hole cover pressing the lower part of the cover on the bumper.
3. Install the towing hook by turning it clockwise into the hole until it is fully secured.
4. Remove the towing hook and install the cover after use.

Emergency towing

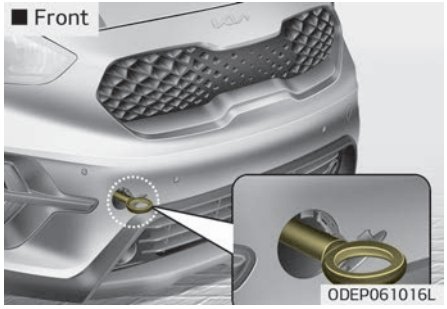

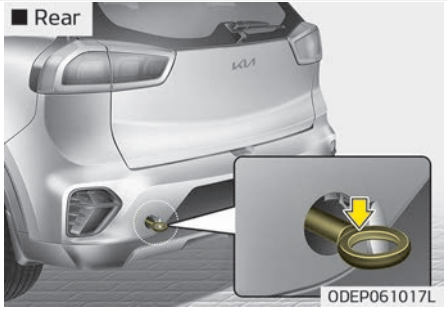

If towing is necessary, we recommend you to have it done by an authorized Kia dealer or a commercial tow truck service.

If towing service is not available in an emergency, your vehicle may be temporarily towed using a cable or chain secured to the emergency towing hook under the front (or rear) of the vehicle. Use extreme caution when towing the vehicle. A driver must be in the vehicle to steer it and operate the brakes.
Towing in this manner may be done only on hard-surfaced roads for a short distance and at low speed. Also, the wheels, axles, power train, steering and brakes must all be in good condition.

- Do not use the tow hooks to pull a vehicle out of mud, sand or other conditions from which the vehicle cannot be driven out under its own power.
- Avoid towing a vehicle heavier than the vehicle doing the towing.
- The drivers of both vehicles should communicate with each other frequently.

⚠ CAUTION

- **Attach a towing strap to the tow hook.**

(Continued)

(Continued)

- **Using a portion of the vehicle other than the tow hooks for towing may damage the body of your vehicle.**
- **Use only a cable or chain specifically intended for use in towing vehicles. Securely fasten the cable or chain to the towing hook provided.**
- **Accelerate or decelerate the vehicle in a slow and gradual manner while maintaining tension on the tow rope or chain to start or drive the vehicle, otherwise tow hooks and the vehicle may be damaged.**

- Before emergency towing, check if the hook is not broken or damaged.
- Fasten the towing cable or chain securely to the hook.
- Do not jerk the hook. Apply it steadily and with even force.
- To avoid damaging the hook, do not pull from the side or at a vertical angle. Always pull straight ahead.

⚠ WARNING

Use extreme caution when towing the vehicle.

- **Avoid sudden starts or erratic driving maneuvers which would place excessive stress on the emergency towing hook and towing cable or chain. The hook and towing cable or chain may break and cause serious injury or damage.**
- **If the disabled vehicle is unable to be moved, do not forcibly continue the towing. We recommend that you contact an authorized Kia dealer or a commercial tow truck service for assistance.**
- **Tow the vehicle as straight ahead as possible.**
- **Keep away from the vehicle during towing.**

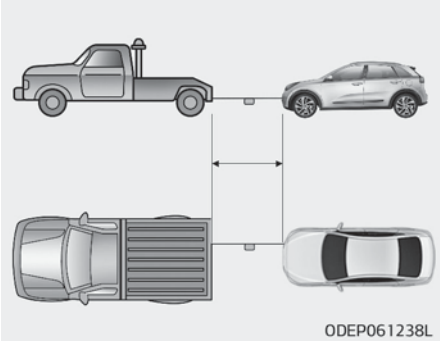

- Use a towing strap less than 5 m (16 feet) long. Attach a white or red cloth (about 30 cm (12 inches) wide) in the middle of the strap for easy visibility.

- Drive carefully so that the towing strap is not loosened during towing.
- The driver must be in the vehicle for steering and braking operations when the vehicle is towed and passengers other than the driver must not be allowed to be on board.

Emergency towing precautions

- Turn the ignition switch to ACC so the steering wheel isn't locked.
- Place the transmission shift lever in N (Neutral).
- Release the parking bake.
- Press the brake pedal with more force than normal since you will have reduced brake performance.
- More steering effort will be required because the power steering system will be disabled.
- If you are driving down a long hill, the brakes may overheat and brake performance will be reduced. Stop often and let the brakes cool off.
- The vehicle should be towed at a speed of 25 km/h (15 mph) or less within the distance of 20 km (12 miles).

⚠ CAUTION

■ Dual clutch transmission

(Continued)

(Continued)

- **If the car is being towed with all four wheels on the ground, it can be towed only from the front. Be sure that the transmission is in neutral. Be sure the steering is unlocked by placing the ignition switch in the ACC position. A driver must be in the towed vehicle to operate the steering and brakes.**
- **To avoid serious damage to the dual clutch transmission, limit the vehicle speed to 15 km/h (10 mph) and drive less than 1.5 km (1 mile) when towing.**
- **Before towing, check the dual clutch transmission for fluid leaks under your vehicle. If the dual clutch transmission fluid is leaking, flatbed equipment or a towing dolly must be used.**

IF AN ACCIDENT OCCURS

⚠ WARNING

- For your safety, do not touch high voltage cables, connectors and package modules.
  High voltage components are orange in color.
- Exposed cables or wires may be visible inside or outside of the vehicle. Never touch the wires or cables, because an electrical shock, an injury, or a death may occur.
- Any gas or electrolyte leakage from your vehicle is not only poisonous but also flammable.
  Upon witnessing one of those, open the windows, and remain a safe distance from the vehicle out of the road.
  Immediately contact a professional work shop and advise them that a hybrid vehicle is involved. Kia recommends to contact an authorized Kia dealer/service partner.
- If you need towing, refer to "Towing" on page 7-34.

(Continued)

(Continued)

- When the vehicle is severely damaged, remain a safe distance of 15 meter or more between your vehicle and other vehicles/flammables.

⚠ WARNING

If a small scale fire occurs, use a fire extinguisher (ABC, BC) that is meant for electrical fires.
If it is impossible to extinguish the fire in the early stage, remain a safe distance from the vehicle and immediately call your local fire emergency responders. Also, advise them that a hybrid vehicle is involved.
If the fire spreads to the high voltage battery, large amount of water is needed to put out the fire.
Using small amount of water or fire extinguishers not meant for electrical fires could cause serious injury or death from electrical shocks.

⚠ WARNING

When a submersion in water occurs:
When your vehicle is flooded in water, a high-voltage battery may cause shock or may catch on fire. Thus, turn the hybrid system OFF, take the key in your possession and move to a safe place. Never attempt physical contact with your flooded vehicle. Immediately contact a professional work shop and advise them that a hybrid vehicle is involved. Kia recommends to contact an authorized Kia dealer/service partner.

EMERGENCY COMMODITY (IF EQUIPPED)

There are some emergency commodities in the vehicle to help you respond to the emergency situation.

Fire extinguisher

If there is small fire and you know how to use the fire extinguisher, take the following steps carefully.

1. Pull the pin at the top of the extinguisher that keeps the handle from being accidentally pressed.
2. Aim the nozzle toward the base of the fire.
3. Stand approximately 2.5 m (8 ft) away from the fire and squeeze the handle to discharge the extinguisher. If you release the handle, the discharge will stop.
4. Sweep the nozzle back and forth at the base of the fire. After the fire appears to be out, watch it carefully since it may re-ignite.

First aid kit

There are some items such as scissors, bandage and adhesive tape and etc. in the kit to give first aid to an injured person.

Triangle reflector

Place the triangle reflector on the road to warn oncoming vehicles during emergencies, such as when the vehicle is parked by the roadside due to any problems.

Tire pressure gauge (if equipped)

Tires normally lose some air in day-to-day use, and you may have to add a few pounds of air periodically and it is not usually a sign of a leaking tire, but of normal wear. Always check tire pressure when the tires are cold because tire pressure increases with temperature.

To check the tire pressure, take the following steps:

1. Unscrew the inflation valve cap that is located on the rim of the tire.
2. Press and hold the gauge against the tire valve. Some air will escape as you begin and more will escape if you don't press the gauge in firmly.
3. A firm non-leaking push will activate the gauge.
4. Read the tire pressure on the gauge to know whether the tire pressure is low or high.
5. Adjust the tire pressures to the specified pressure. Refer to “Tires and wheels” on page 9-09.
6. Reinstall the inflation valve cap.

Maintenance

Engine compartment....8-04
Maintenance services....8-05
Owner's responsibility....8-05
Owner maintenance precautions....8-05
Owner maintenance....8-07
Owner maintenance schedule....8-07
Scheduled maintenance service....8-09
Scheduled maintenance service precaution....8-09
Normal Maintenance Schedule - For Gasoline Engine [For Europe (Except Russia)]....8-10
Normal Maintenance Schedule - For Gasoline Engine [For Europe (Except Russia)]....8-12
Maintenance Under Severe Usage Conditions - For Gasoline Engine [For Europe (Except Russia)]....8-15
Normal Maintenance Schedule - For Gasoline Engine [Except Europe (Including Russia)]....8-17
Normal Maintenance Schedule - For Gasoline Engine [Except Europe (Including Russia)]....8-19
Maintenance Under Severe Usage Conditions - For Gasoline Engine [Except Europe (Including Russia)]....8-23
Explanation of scheduled maintenance items....8-25
Engine oil and filter....8-25
HSG (Hybrid starter & generator) belt....8-25
Fuel filter (for gasoline)....8-25
Fuel lines, fuel hoses and connections....8-25
Vapor hose (for gasoline engine) and fuel filler cap....8-25
Vacuum crankcase ventilation hoses....8-25
Air cleaner filter....8-25
Spark plugs....8-25
Cooling system....8-26
Coolant (Engine/Inverter)....8-26
Dual clutch transmission fluid....8-26
Brake hoses and lines....8-26
Brake fluid....8-26
Parking brake....8-26
Brake discs, pads and calipers....8-26
Suspension mounting bolts....8-26
Steering gear box, linkage & boots/lower arm ball joint....8-26
Drive shafts and boots....8-26
Air conditioning refrigerant....8-26
Engine oil....8-27
Checking the engine oil level....8-27
Changing the engine oil and filter....8-28
Engine coolant....8-29
Checking the coolant level....8-29
Engine coolant....8-30
Inverter coolant....8-30
Recommended coolant....8-31
Changing the coolant....8-32
Brake fluid....8-33
Checking the brake fluid level....8-33
Engine clutch actuator fluid....8-34
Checking the engine clutch actuator fluid level....8-34
Washer fluid....8-35
Checking the washer fluid level....8-35
Parking brake....8-36
Checking the parking brake....8-36
Air cleaner....8-37

Filter replacement....8-37
Climate control air filter....8-38
Filter inspection....8-38
Wiper blades....8-39
Blade inspection....8-39
Blade replacement....8-39
Battery (Plug-in Hybrid)....8-42
For best battery service....8-42
Battery capacity label....8-43
Battery recharging....8-44
Reset items....8-45
Tires and wheels....8-46
Tire care....8-46
Recommended cold tire inflation pressures....8-46
Checking tire inflation pressure....8-47
Tire rotation....8-48
Wheel alignment and tire balance....8-49
Tire replacement....8-49
Wheel replacement....8-51
Tire traction....8-51
Tire maintenance....8-51
Tire sidewall labeling....8-51
Low aspect ratio tire (if equipped)....8-54
Fuses....8-56
Inner panel fuse replacement....8-57
Engine compartment fuse replacement....8-59
Fuse/relay panel description....8-61
Light bulbs....8-83
Bulb replacement precaution....8-83
Light bulb position (Front)....8-85
Light bulb position (Rear)....8-85
Light bulb position (Side)....8-86
Headlamp (High/Low beam) (Bulb type) bulb replacement (Headlamp type A)....8-87
Front turn signal lamp (Bulb type) bulb replacement (Headlamp type A)....8-88
Headlamp (High/Low beam) (LED type) bulb replacement (Headlamp type B)....8-88
Front turn signal (LED type) bulb replacement (Headlamp type B)....8-89
Daytime running lamp/Position lamp (LED type) bulb replacement....8-89
Front fog lamp (Bulb/LED type) bulb replacement....8-89
Stop and tail lamp, Rear turn signal lamp (Bulb type) bulb replacement....8-90
Tail lamp (inside) (Bulb type) bulb replacement....8-91
Stop and tail lamp (LED type) bulb replacement....8-91
Rear fog lamp (LED type) bulb replacement....8-92
Back up lamp (Bulb type) bulb replacement....8-92
License plate lamp (Bulb type) bulb replacement....8-92
High mounted stop lamp (LED type) bulb replacement....8-93
Side repeater lamp (LED type) bulb replacement....8-93
Map lamp (Bulb type) bulb replacement....8-94
Map lamp (LED type) bulb replacement....8-94
Vanity mirror lamp (Bulb type) bulb replacement....8-94
Room lamp (Bulb type) bulb replacement....8-95
Room lamp (LED type) bulb replacement....8-96
Tailgate room lamp (Bulb type) bulb replacement....8-96
Tailgate room lamp (LED type) bulb replacement....8-96

Headlamp and front fog lamp aiming (for Europe).....8-97
Appearance care..... 8-104
Exterior care..... 8-104
Interior care..... 8-108
Emission control system 8-111
1. Crankcase emission control system..... 8-111
2. Evaporative emission control system.....8-111
3. Exhaust emission control system..... 8-111

ENGINE COMPARTMENT

■ (Gasoline) 1.6L GDi

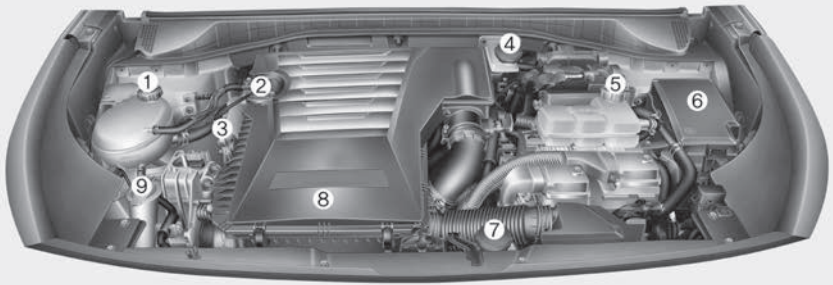

※ The actual engine room in the vehicle may differ from the illustration.

ODEP079115B

1. Engine coolant reservoir
2. Engine oil filler cap
3. Engine oil dipstick
4. Brake fluid reservoir
5. Inverter coolant reservoir
6. Fuse box
7. Engine clutch actuator reservoir tank
8. Air cleaner
9. Windshield washer fluid reservoir

MAINTENANCE SERVICES

You should exercise the utmost care to prevent damage to your vehicle and injury to yourself whenever performing any maintenance or inspection procedures.
Inadequate, incomplete or insufficient servicing may result in operational problems with your vehicle that could lead to vehicle damage, an accident, or personal injury.

Owner's responsibility

✻ NOTICE

Maintenance Service and Record Retention are the owner's responsibility.

Have your vehicle serviced by a professional workshop. Kia recommends to visit an authorized Kia dealer/service partner.
You should retain documents that show proper maintenance has been performed on your vehicle in accordance with "the scheduled maintenance service charts" on page 8-09.

You need this information to establish your compliance with the servicing and maintenance requirements of your vehicle warranties.
Detailed warranty information is provided in your Warranty & Maintenance book.
Repairs and adjustments required as a result of improper maintenance or a lack of required maintenance are not covered when your vehicle is covered by warranty.

Owner maintenance precautions

Improper or incomplete service may result in problems. This section gives instructions only for the maintenance items that are easy to perform.

✻ NOTICE

Improper owner maintenance during the warranty period may affect warranty coverage. For details, read the separate Warranty & Maintenance book provided with the vehicle. If you're unsure about any servicing or maintenance procedure, have the system serviced by a pro-

(Continued)

(Continued)

fessional workshop. Kia recommends to visit an authorized Kia dealer/service partner.

⚠ WARNING

■ Maintenance work

- **Performing maintenance work on a vehicle can be dangerous. You can be seriously injured while performing some maintenance procedures. If you lack sufficient knowledge and experience or the proper tools and equipment to do the work, have the system serviced by a professional workshop. Kia recommends to visit an authorized Kia dealer/service partner.**

(Continued)

(Continued)

- Working under the hood with the engine running is dangerous. It becomes even more dangerous when you wear jewelry or loose clothing. These can become entangled in moving parts and result in injury. Therefore, if you must run the engine while working under the hood, make certain that you remove all jewelry (especially rings, bracelets, watches, and necklaces) and all neckties, scarves, and similar loose clothing before getting near the engine or cooling fans.

⚠ CAUTION

- Do not put heavy objects or apply excessive force on top of the engine cover or fuel related parts.

(Continued)

(Continued)

- When you inspect the fuel system (fuel lines and fuel injection devices), contact a professional workshop. Kia recommends to visit an authorized Kia dealer/service partner.
- Do not drive long time with the engine cover removed.
- When checking the engine room, do not go near fire.
  Fuel, washer fluid, etc. are flammable oils that may cause fire.
- Before touching the battery, ignition cables and electrical wiring, you should disconnect the battery "-" terminal. You may get an electric shock from the electric current.
- When you remove the interior trim cover with a flat bed (-) driver, be careful not to damage the cover.
- Be careful when you replace and clean bulbs to avoid burns or electrical shock.

OWNER MAINTENANCE

The following lists are vehicle checks and inspections that should be performed at the frequencies indicated to help ensure safe, dependable operation of your vehicle.
Any adverse conditions should be brought to the attention of your dealer as soon as possible.
These Owner Maintenance Checks are generally not covered by warranties and you may be charged for labor, parts and lubricants used.

Owner maintenance schedule

When you stop for fuel:

- Check the coolant level in the coolant reservoir.
- Check the windshield washer fluid level.
- Look for low or under-inflated tires.

⚠ WARNING

Be careful when checking your engine coolant level when the engine is hot. Scalding hot coolant and steam may blow out under pressure. This could cause burns or other serious injury.

While operating your vehicle:

- Note any changes in the sound of the exhaust or any smell of exhaust fumes in the vehicle.
- Check for vibrations in the steering wheel. Notice any increased steering effort or looseness in the steering wheel, or change in its straight-ahead position.
- Notice if your vehicle constantly turns slightly or "pulls" to one side when traveling on smooth, level road.
- When driving, listen and check for unusual sounds, pulling to one side, increased brake pedal travel or "hard-to-push" brake pedal.
- If any slipping or changes in the operation of your transmission occurs, check the transmission fluid level.
- Check the dual clutch transmission P (Park) function.
- Check the parking brake.
- Check for fluid leaks under your vehicle (water dripping from the air conditioning system during or after use is normal).

At least monthly:

- Check the coolant level in the engine coolant reservoir.
- Check the operation of all exterior lights, including the stop lights, turn signals and hazard warning flashers.
- Check the inflation pressures of all tires including the spare for tires that are worn, show uneven wear, or are damaged.
- Check for loose wheel lug nuts.

At least twice a year (i.e., every spring and fall):

- Check the radiator, heater and air conditioning hoses for leaks or damage.
- Check the windshield washer spray and wiper operation. Clean the wiper blades with clean cloth dampened with washer fluid.
- Check the headlight alignment.
- Check the muffler, exhaust pipes, shields and clamps.
- Check the lap/shoulder belts for wear and function.

At least once a year:

- Clean the body and door drain holes.
- Lubricate the door hinges and checks, and hood hinges.
- Lubricate the door and hood locks and latches.
- Lubricate the door rubber weather-strips.
- Check the air conditioning system.
- Inspect and lubricate the automatic transmission linkage and controls.
- Clean the battery and terminals.
- Check the brake fluid level.

SCHEDULED MAINTENANCE SERVICE

Scheduled maintenance service precaution

Follow the Normal Maintenance Schedule if the vehicle is usually operated where none of the following conditions apply. If any of the following conditions apply, follow the Maintenance Under Severe Usage Conditions.

- Repeated driving short distance of less than 8 km (5 miles) in normal temperature or less than 16 km (10 miles) in freezing temperature
- Extensive engine idling or low speed driving for long distances
- Driving on rough, dusty, muddy, unpaved, graveled or salt-spread roads
- Driving in areas using salt or other corrosive materials or in very cold weather
- Driving in heavy dust condition
- Driving in heavy traffic area
- Driving on uphill, downhill, or mountain road repeatedly
- Using for towing or camping and driving with loading on the roof.
- Driving as a patrol car, taxi, other commercial use of vehicle towing
- Frequently driving under high speed or rapid acceleration/deceleration.
- Frequently driving in stop-and-go condition
- Engine oil usage which is not recommended (Mineral type, Semi-synthetic, Lower grade spec, etc.)
- Using for towing or camping and driving with loading on the roof.

If your vehicle is operated in any of the prior listed conditions, you should inspect, replace or refill more frequently, using the severe usage maintenance schedule instead of the normal usage maintenance schedule.

Normal Maintenance Schedule - For Gasoline Engine [For Europe (Except Russia)]

The following maintenance services must be performed to ensure good emission control and performance. Keep receipts for all vehicle emission services to protect your warranty. Where both mileage and time are shown, the frequency of service is determined by whichever occurs first.

NO.	ITEM	REMARK
*1	Coolant (Engine / Inverter)	When adding coolant, use only deionized water or soft water for your vehicle and never mix hard water in the coolant filled at the factory. An improper coolant mixture can result in serious malfunction or engine damage.
*2	Engine oil and engine oil filter	- As it is normal for engine oil to be consumed during driving, the engine oil level should be checked on regular basis. - The engine oil change interval for normal operating conditions is based on the use of the recommended engine specification. If the recommended engine oil specification is not used, then replace the engine oil according to the maintenance schedule under severe operating conditions.
*3	Fuel additives (Gasoline)	Kia recommends that you use unleaded gasoline which has an octane rating of RON (Research Octane Number) 95 / AKI (Antiknock Index) 91 or higher (for Europe) or Octane Rating of RON (Research Octane Number) 91 / AKI (Antiknock Index) 87 or higher (except Europe). For customers who do not use good quality gasolines including fuel additives regularly, and have problems starting or the engine does not run smoothly, one bottle of additives added to the fuel tank at every 15,000 km (10,000 miles)(for Europe, Australia and New Zealand)/10,000 km (6,500 miles) (except Europe, Australia and New Zealand). Additives are available from a professional workshop along with information on how to use them. Kia recommends to visit an authorized Kia dealer/service partner. Do not mix other additives.
*4	HSG (Hybrid Starter & Generator) belt	Inspect HSG belt for evidence of cuts, crocks, excessive wear or oil saturation and replace if necessary. If drive belt noise occurred, readjust drive belt tension before replace.

NO.	ITEM	REMARK
*5	Spark plug	For your convenience, it can be replaced prior to it's interval when you do maintenance of other items.
*6	Dual clutch transmission (DCT) fluid	Dual clutch transmission (DCT) fluid should be changed anytime it has been submerged in water.

Normal Maintenance Schedule – For Gasoline Engine [For Europe (Except Russia)]

MAINTENANCE INTERVALS	Normal Maintenance Schedule – For Gasoline Engine [For Europe (Except Russia)]								
	Number of months or driving distance, whichever comes first								
	Months	12	24	36	48	60	72	84	96
	Miles×1,000	10	20	30	40	50	60	70	80
	Km×1,000	15	30	45	60	75	90	105	120
MAINTENANCE ITEM									
Engine oil and engine oil filter*2		R	R	R	R	R	R	R	R
Coolant (Engine / Inverter)*1		At first, replace 210,000 km (140,000 miles) or 120 months After that, replace every 30,000 km (20,000 miles) or 24 months							
HSG (Hybrid Starter & Generator) belt*4		Inspect every 15,000 km (10,000 miles) or 12 months, Replace every 105,000km (70,000 miles) or 48 months.							
Vacuum hoses and crankcase ventilation hoses		I	I	I	I	I	I	I	I
Spark plugs*5	(Gasoline) 1.6L GDi	Replace every 150,000 km (100,000 miles) or 120 months							
Dual clutch transmission (DCT) fluid*6					I				I
Engine clutch actuator fluid		I	R	I	R	I	R	I	R
Engine clutch actuator hose and line		I	I	I	I	I	I	I	I
Drive shaft and boots			I		I		I		I
Fuel additives*3		Add every 15,000 km (10,000 miles) or 12 months							
Fuel lines, hoses and connections					I				I
Fuel tank air filter					I				I

MAINTENANCE INTERVALS	Normal Maintenance Schedule - For Gasoline Engine [For Europe (Except Russia)]							
	Number of months or driving distance, whichever comes first							
	Months	12	24	36	48	60	72	84	96
	Miles×1,000	10	20	30	40	50	60	70	80
	Km×1,000	15	30	45	60	75	90	105	120
MAINTENANCE ITEM									
Vapor hose and fuel filler cap					I				I
Air cleaner filter		-	I	-	R	-	R	-	R
Air cleaner rubber packing		I	I	I	I	I	I	I	I
Exhaust system			I		I		I		I
Cooling system		At first, inspect 60,000 km (40,000 miles) or 48 months After that, inspect every 30,000 km (20,000 miles) or 24 months							
Air conditioner compressor/refrigerant (if equipped)		I	I	I	I	I	I	I	I
Climate control air filter			R		R		R		R
Brake lines, hoses and connections		I	I	I	I	I	I	I	I
Brake fluid		I	R	I	R	I	R	I	R
Parking brake			I		I		I		I
Steering gear rack, linkage and boots		I	I	I	I	I	I	I	I
Tire (pressure & tread wear)		I	I	I	I	I	I	I	I
Suspension ball joints		I	I	I	I	I	I	I	I
Battery condition		I	I	I	I	I	I	I	I
Brake discs and pads		I	I	I	I	I	I	I	I

I: Inspect and if necessary, adjust, correct, clean or replace
R: Replace or change

- Fuel filter: The fuel filter is considered to be maintenance free but periodic inspection is recommended for this maintenance schedule depends on fuel quality.
  - If there are some important safety matters like fuel flow restriction, surging, loss of power, hard starting problem etc, replace the fuel filter immediately regardless of maintenance schedule and consult an authorized Kia dealer/service partner for details.

Maintenance Under Severe Usage Conditions - For Gasoline Engine [For Europe (Except Russia)]

MAINTENANCE ITEM	MAINTENANCE OPERATION	MAINTENANCE INTERVALS	DRIVING CONDITION
Engine oil and engine oil filter	R	Every 7,500 km (5,000 miles) or 6 months	A, B, C, D, E, F, G, H, I, J, K, L
HSG (Hybrid Starter & Generator) belt	R	Every 45,000 km (30,000 miles) or 24 months	C, D, E, K
	I	Every 15,000 km (10,000 miles) or 12 months	C, D, E, K
Air cleaner filter	R	More frequently	C, E
Spark plugs	R	More frequently	A, B, F, G, H, I, K
Dual clutch transmission (DCT) fluid	R	Every 120,000 km (80,000 miles)	C, D, E, F, G, H, I, J
Steering gear rack, linkage and boots	I	More frequently	C, D, E, F, G
Suspension ball joints	I	More frequently	C, D, E, F, G
Brake discs, pads and calipers	I	More frequently	C, D, E, G, H
Parking brake	I	More frequently	C, D, G, H
Drive shaft and boots	I	More frequently	C, D, E, F, G, H, I, J
Climate control air filter	R	More frequently	C, E, G

Maintenance operation
I: Inspect and if necessary, adjust, correct, clean or replace
R: Replace or change.
SEVERE DRIVING CONDITIONS
A: Repeatedly driving short distance of less than 8 km (5 miles) in normal temperature or less than 16 km (10 miles) in freezing temperature.

B: Extensive engine idling or low speed driving for long distances.
C: Driving on rough, dusty, muddy, unpaved, graveled or salt-spread roads.
D: Driving in areas using salt or other corrosive materials or in very cold weather.
E: Driving in heavy dust condition.
F: Driving in heavy traffic area.
G: Driving on uphill, downhill, or mountain road repeatedly.
H: Using for towing or camping and driving with loading on the roof.
I: Driving for patrol car, taxi, commercial car or vehicle towing.
J: Frequently driving under high speed or rapid acceleration/deceleration.
K: Frequently driving in stop-and-go conditions.
L: Engine oil usage which is not recommended (Mineral type, Semi-synthetic, Lower grade spec, etc.)

Normal Maintenance Schedule - For Gasoline Engine [Except Europe (Including Russia)]

The following maintenance services must be performed to ensure good emission control and performance. Keep receipts for all vehicle emission services to protect your warranty. Where both mileage and time are shown, the frequency of service is determined by whichever occurs first.

NO.	ITEM	REMARK
*1	Coolant (Engine / Inverter)	When adding coolant, use only deionized water or soft water for your vehicle and never mix hard water in the coolant filled at the factory. An improper coolant mixture can result in serious malfunction or engine damage.
*2	Engine oil and engine oil filter	- As it is normal for engine oil to be consumed during driving, the engine oil level should be checked on regular basis. - The engine oil change interval for normal operating conditions is based on the use of the recommended engine specification. If the recommended engine oil specification is not used, then replace the engine oil according to the maintenance schedule under severe operating conditions.
*3	Fuel additives (Gasoline)	Kia recommends that you use unleaded gasoline which has an octane rating of RON (Research Octane Number) 95 / AKI (Antiknock Index) 91 or higher (for Europe) or Octane Rating of RON (Research Octane Number) 91 / AKI (Antiknock Index) 87 or higher (except Europe). For customers who do not use good quality gasolines including fuel additives regularly, and have problems starting or the engine does not run smoothly, one bottle of additives added to the fuel tank at every 15,000 km (10,000 miles) (for Europe, Australia and New Zealand) / 10,000 km (6,500 miles) (except Europe, Australia and New Zealand). Additives are available from a professional workshop along with information on how to use them. Kia recommends to visit an authorized Kia dealer/service partner. Do not mix other additives.
*4	HSG (Hybrid Starter & Generator) belt	Inspect HSG belt for evidence of cuts, crocks, excessive wear or oil saturation and replace if necessary. If drive belt noise occurred, readjust drive belt tension before replace.

NO.	ITEM	REMARK
*5	Spark plug	For your convenience, it can be replaced prior to it's interval when you do maintenance of other items.
*6	Dual clutch transmission (DCT) fluid	Dual clutch transmission (DCT) fluid should be changed anytime it has been submerged in water.

Normal Maintenance Schedule - For Gasoline Engine [Except Europe (Including Russia)]

MAINTENANCE INTERVALS	Normal Maintenance Schedule - For Gasoline Engine [Except Europe (Including Russia)]								
	Number of months or driving distance, whichever comes first								
	Months	12	24	36	48	60	72	84	96
	Miles×1,000	10	20	30	40	50	60	70	80
	Km×1,000	15	30	45	60	75	90	105	120
MAINTENANCE ITEM									
Engine oil and engine oil filter*2	For Middle East,India, Central & South America	Inspect 10,000 km (6,500 miles) or 12 months							
	Except Middle East,India, Central & South America	R	R	R	R	R	R	R	R
Coolant (Engine / Inverter)*1		At first, replace 210,000 km (140,000 miles) or 120 months After that, replace every 30,000 km (20,000 miles) or 24 months							
HSG (Hybrid Starter & Generator) belt*4		Except Middle East, Brazil : Inspect every 15,000 km (10,000 miles) or 12 months, and replace every 105,000 km (70,000 miles) or 48 months For Middle East : Inspect every 10,000 km (6,500 miles) or 12 months, and replace every 100,000 km (65,000 miles) or 48 months							
Vacuum hoses and crankcase ventilation hoses		I	I	I	I	I	I	I	I
Spark plugs*5	(Gasoline) 1.6L GDi	Replace every 150,000 km (100,000 miles) or 120 months							
Dual clutch transmission (DCT) fluid*6					I				I
Engine clutch actuator fluid		Replace every 40,000 km (26,000 miles) or 24 months							

MAINTENANCE INTERVALS	Normal Maintenance Schedule - For Gasoline Engine [Except Europe (Including Russia)]								
	Number of months or driving distance, whichever comes first								
	Months	12	24	36	48	60	72	84	96
	Miles×1,000	10	20	30	40	50	60	70	80
	Km×1,000	15	30	45	60	75	90	105	120
MAINTENANCE ITEM									
Engine clutch actuator hose and line		I	I	I	I	I	I	I	I
Drive shaft and boots		I	I	I	I	I	I	I	I
Fuel additives (Gasoline)*3		Add every 10,000 km (6,500 miles) or 6 months							
Fuel lines, hoses and connections					I				I
Fuel tank air filter			I		R		I		R
Vapor hose and fuel filler cap					I				I
Air cleaner filter	Except China, India, Middle East	I	I	R	I	I	R	I	I
	For China, India, Middle East	R	R	R	R	R	R	R	R
Exhaust system			I		I		I		I
Cooling system		At first, inspect 60,000 km (40,000 miles) or 48 months After that, inspect every 30,000 km (20,000 miles) or 24 months							
Air conditioner compressor/refrigerant (if equipped)		I	I	I	I	I	I	I	I

MAINTENANCE INTERVALS	Normal Maintenance Schedule - For Gasoline Engine [Except Europe (Including Russia)]								
	Number of months or driving distance, whichever comes first								
	Months	12	24	36	48	60	72	84	96
	Miles×1,000	10	20	30	40	50	60	70	80
	Km×1,000	15	30	45	60	75	90	105	120
MAINTENANCE ITEM									
Climate control air filter	Except Australia and New Zealand	R	R	R	R	R	R	R	R
	For Australia and New Zealand	I	R	I	R	I	R	I	R
Air cleaner rubber packing		I	I	I	I	I	I	I	I
Brake lines, hoses and connections		I	I	I	I	I	I	I	I
Brake fluid		I	I	R	I	I	R	I	I
Parking brake			I		I		I		I
Steering gear rack, linkage and boots		I	I	I	I	I	I	I	I
Tire (pressure & tread wear)		I	I	I	I	I	I	I	I
Suspension ball joints		I	I	I	I	I	I	I	I
Battery condition		I	I	I	I	I	I	I	I
Brake discs and pads		I	I	I	I	I	I	I	I

I: Inspect and if necessary, adjust, correct, clean or replace
R: Replace or change

- Fuel filter: The fuel filter is considered to be maintenance free but periodic inspection is recommended for this maintenance schedule depends on fuel quality.
  - If there are some important safety matters like fuel flow restriction, surging, loss of power, hard starting problem etc, replace the fuel filter immediately regardless of maintenance schedule and consult an authorized Kia dealer/service partner for details.

Maintenance Under Severe Usage Conditions – For Gasoline Engine [Except Europe (Including Russia)]

Maintenance item		Maintenance operation	Maintenance intervals	Driving condition
Engine oil and engine oil filter	For Middle East, India, Central & South America	R	Every 5,000 km (3,000 miles) or 6 months	A, B, C, D, E, F, G, H, I, J, K, L
	Except Middle East, India, Central & South America	R	Every 7,500 km (5,000 miles) or 6 months	A, B, C, D, E, F, G, H, I, J, K, L
HSG (Hybrid Starter & Generator) belt	For Middle East	R	Every 40,000 km (26,000 miles) or 24 months	C, D, E, K
		I	Every 10,000 km (6,500 miles) or 12 months	C, D, E, K
	Except Middle East, Brazil	R	Every 45,000 km (30,000 miles) or 24 months	C, D, E, K
		I	Every 15,000 km (10,000 miles) or 12 months	C, D, E, K
Air cleaner filter		R	More frequently	C, E
Spark plugs		R	More frequently	A, B, F, G, H, I, K
Dual clutch transmission (DCT) fluid		R	Every 120,000 km (80,000 miles)	C, D, E, F, G, H, I, J
Steering gear rack, linkage and boots		I	More frequently	C, D, E, F, G
Suspension ball joints		I	More frequently	C, D, E, F, G
Brake discs, pads and calipers		I	More frequently	C, D, E, G, H
Parking brake		I	More frequently	C, D, G, H
Drive shaft and boots		I	More frequently	C, D, E, F, G, H, I, J

Maintenance item	Maintenance operation	Maintenance intervals	Driving condition
Climate control air filter	R	More frequently	C, E, G

Maintenance operation
I: Inspect and if necessary, adjust, correct, clean or replace
R: Replace or change.
SEVERE DRIVING CONDITIONS
A: Repeatedly driving short distance of less than 8 km (5 miles) in normal temperature or less than 16 km (10 miles) in freezing temperature.
B: Extensive engine idling or low speed driving for long distances.
C: Driving on rough, dusty, muddy, unpaved, graveled or salt-spread roads.
D: Driving in areas using salt or other corrosive materials or in very cold weather.
E: Driving in heavy dust condition.
F: Driving in heavy traffic area.
G: Driving on uphill, downhill, or mountain road repeatedly.
H: Using for towing or camping and driving with loading on the roof.
I: Driving for patrol car, taxi, commercial car or vehicle towing.
J: Frequently driving under high speed or rapid acceleration/deceleration.
K: Frequently driving in stop-and-go conditions.
L: Engine oil usage which is not recommended (Mineral type, Semi-synthetic, Lower grade spec, etc.)

EXPLANATION OF SCHEDULED MAINTENANCE ITEMS

Engine oil and filter

The engine oil and filter should be changed at the intervals specified in the maintenance schedule. If the vehicle is being driven in severe conditions, more frequent oil and filter changes are required.

HSG (Hybrid starter & generator) belt

The HSG belt should be changed at the intervals specified in the maintenance schedule.

Fuel filter (for gasoline)

Kia gasoline vehicle is equipped a lifetime fuel filter that integrated with the fuel tank. Regular maintenance or replacement is not needed but depends on fuel quality. If there are some important safety matters like fuel flow restriction, surging, loss of power, hard starting problem etc, fuel filter inspection or replace is needed.
Have the fuel filter inspected or replaced by a professional workshop. Kia recommends to visit an authorized Kia dealer/service partner.

Fuel lines, fuel hoses and connections

Check the fuel lines, fuel hoses and connections for leakage and damage. Have the fuel lines, fuel hoses and connections replaced by a professional workshop. Kia recommends to visit an authorized Kia dealer/service partner.

Vapor hose (for gasoline engine) and fuel filler cap

The vapor hose and fuel filler cap should be inspected at those intervals specified in the maintenance schedule. Make sure that a new vapor hose or fuel filler cap is correctly replaced.

Vacuum crankcase ventilation hoses (if equipped)

Inspect the surface of hoses for evidence of heat and/or mechanical damage. Hard and brittle rubber, cracking, tears, cuts, abrasions, and excessive swelling indicate deterioration. Particular attention should be paid to examine those hose surfaces nearest to high heat sources, such as the exhaust manifold.
Inspect the hose routing to assure that the hoses do not come in contact with any heat source, sharp edges or moving component which might cause heat damage or mechanical wear. Inspect all hose connections, such as clamps and couplings, to make sure they are secure, and that no leaks are present. Hoses should be replaced immediately if there is any evidence of deterioration or damage.

Air cleaner filter

Have the air cleaner filter replaced by a professional workshop. Kia recommends to visit an authorized Kia dealer/service partner.

Spark plugs

Make sure to install new spark plugs of the correct heat range.
When assembling parts, be sure to wipe the inside and outside of the boot bottom of the ignition coil and the insulator of the spark plug with a soft cloth to prevent contamination of the spark plug insulator.

⚠ WARNING

Do not disconnect and inspect spark plugs when the engine is hot. You may burn yourself.

Cooling system
Check the cooling system components, such as the radiator, coolant reservoir, hoses and connections for leakage and damage. Replace any damaged parts.

Coolant (Engine/Inverter)
The coolant should be changed at the intervals specified in the maintenance schedule.

Dual clutch transmission fluid
Inspect the dual clutch transmission fluid according to the maintenance schedule.

Brake hoses and lines
Visually check for proper installation, chafing, cracks, deterioration and any leakage. Replace any deteriorated or damaged parts immediately.

Brake fluid
Check the brake fluid level in the brake fluid reservoir. The level should be between "MIN" and "MAX" marks on the side of the reservoir. Use only hydraulic brake fluid conforming to DOT 3 or DOT 4 specification.

Parking brake
Inspect the parking brake system including the parking brake lever (or pedal) and cables.

Brake discs, pads and calipers
Check the pads for excessive wear, discs for run out and wear, and calipers for fluid leakage.
For more information on checking the pads or lining wear limit, we recommend to refer to the Kia web site. (https://www.kia-hotline.com)

Suspension mounting bolts
Check the suspension connections for looseness or damage. Retighten to the specified torque.

Steering gear box, linkage & boots/lower arm ball joint
With the vehicle stopped and engine off, check for excessive free-play in the steering wheel.
Check the linkage for bends or damage. Check the dust boots and ball joints for deterioration, cracks, or damage. Replace any damaged parts.

Drive shafts and boots
Check the drive shafts, boots and clamps for cracks, deterioration, or damage. Replace any damaged parts and, if necessary, repack the grease.

Air conditioning refrigerant
Check the air conditioning lines and connections for leakage and damage.

ENGINE OIL

Checking the engine oil level

Engine oil is used for lubricating, cooling, and operating various hydraulic components in the engine. Engine oil consumption while driving is normal, and it is necessary to check and refill the engine oil regularly. Also, check and refill the oil level within the recommended maintenance schedule to prevent deterioration of oil performance. Check the engine oil following the below procedure.

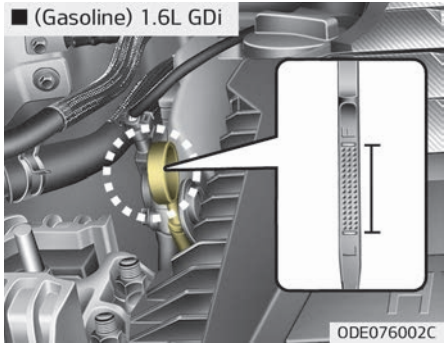

1. Be sure the vehicle is on level ground.
2. Start the engine and allow it to reach normal operating temperature.
3. Turn the engine off, remove the oil filler cap and pull the dipstick out. Wait for 15 minutes for the oil to return to the oil pan.
4. Wipe the dipstick clean and reinsert it fully.

⚠ WARNING

■ Radiator hose

Be very careful not to touch the radiator hose when checking or adding the engine oil as it may be hot enough to burn you.

5. Pull the dipstick out again and check the level. Check if the oil level is between the F-L line, and if it is below the L line, add enough oil to bring the level to F line.

⚠ CAUTION

When you wipe the oil level gauge, you should wipe it with a clean cloth. When mixed with debris, it can cause engine damage.

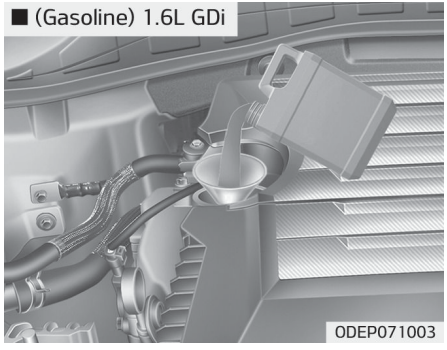

Use a funnel to help prevent oil from being spilled on engine components.

Use only the specified engine oil. (Refer to "Recommended lubricants and capacities" on page 9-13.)

Do not spill engine oil when adding or changing engine oil. Wipe off spilled oil immediately. The engine oil consumption may increase while you break in a new vehicle and it will be stabilized after driving 6,000 km (4,000 miles).
The engine oil consumption can be affected by driving habits, climate conditions, traffic conditions, oil quality, etc. Therefore, it is recommended that you inspect the engine oil level regularly and refill it if necessary.

Changing the engine oil and filter

Have the engine oil and filter replaced by a professional workshop. Kia recommends to visit an authorized Kia dealer/service partner.

- If the maintenance schedule to replace engine oil is exceeded, the engine oil performance may deteriorate, and the engine condition may be affected. Therefore, replace the engine oil according to the maintenance schedule.
- To keep the engine in optimal condition, use the recommended engine oil and filter. If the recommended engine oil and filter are not used replace it according to the maintenance schedule under severe usage conditions.
- The purpose of the maintenance schedule for engine oil replacement is to prevent oil deterioration and it is irrelevant to oil consumption.
  Check and refill engine oil regularly.

⚠ WARNING

Used engine oil may cause skin irritation or cancer if left in contact with the skin for prolonged periods of time. Used engine oil contains chemicals that have caused cancer in laboratory animals. Always protect your skin by washing your hands thoroughly with soap and warm water as soon as possible after handling used oil. Do not leave used engine oil within the reach of children.

⚠ CAUTION

The engine oil is very hot immediately after the vehicle has been driven and can cause burns during replacement. Replace the engine oil after the engine oil has cooled down.

ENGINE COOLANT

The high-pressure cooling system has a reservoir filled with year round anti-freeze coolant. The reservoir is filled at the factory.
Check the antifreeze protection and coolant level at least once a year, at the beginning of the winter season, and before traveling to a colder climate.

⚠ CAUTION

- **When the engine overheats from low engine coolant, suddenly adding engine coolant may cause cracks in the engine. To prevent damage, add engine coolant slowly in small quantities.**
- **Do not drive with no engine coolant. It may cause water pump failure and engine seizure, etc.**

Checking the coolant level

⚠ WARNING

Removing radiator cap

- **Never attempt to remove the radiator cap while the engine is operating or hot. Doing so might lead to cooling system and engine damage. Also, hot coolant or steam could cause serious personal injury.**

(Continued)

(Continued)

- **Turn the engine off and wait until it cools down. Use extreme care when removing the radiator cap. Wrap a thick towel around it, and turn it counterclockwise slowly to the first stop. Step back while the pressure is released from the cooling system.**
  When you are sure all the pressure has been released, press down on the cap, using a thick towel, and continue turning counterclockwise to remove it.
- **Even if the engine is not operating, do not remove the radiator cap or the drain plug while the engine and radiator are hot. Hot coolant and steam may still blow out under pressure, causing serious injury.**

⚠ WARNING

The electric motor (cooling fan) is controlled by coolant temperature, refrigerant pressure and vehicle speed. It may sometimes operate even when the vehicle is not operating. Use extreme caution when working near the blades of the cooling fan so that you are not injured by a rotating fan blades. As the engine coolant temperature decreases, the electric motor will automatically shut off. This is a normal condition. The electric motor (cooling fan) may operate until you disconnect the negative battery cable.

Engine coolant

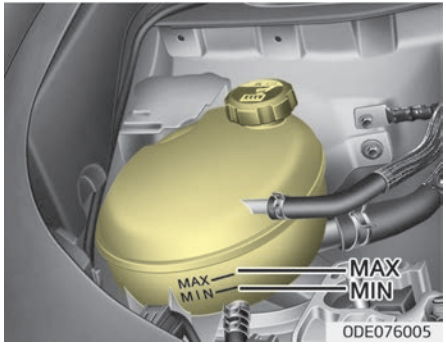

Check the condition and connections of all cooling system hoses and heater hoses. Replace any swollen or deteriorated hoses.
The coolant level should be filled between MAX and MIN marks on the side of the coolant reservoir when the engine is cool.
If the coolant level is low, add enough specified coolant to provide protection against freezing and corrosion. Bring the level to MAX, but do not overfill. If frequent additions are required, have the system inspected by a professional workshop. Kia recommends to visit an authorized Kia dealer/service partner.

Inverter coolant

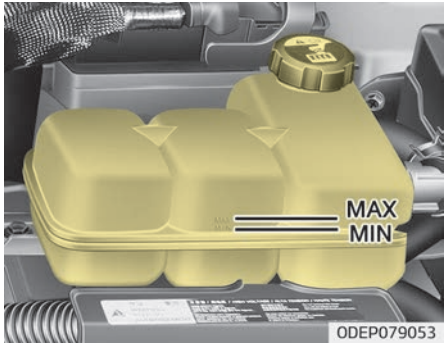

Check the condition and connections of all cooling system hoses and heater hoses. Replace any swollen or deteriorated hoses.
The coolant level should be filled between MAX and MIN marks on the side of the coolant reservoir when the engine is cool.
If the coolant level is low, add enough specified coolant to provide protection against freezing and corrosion. Bring the level to MAX, but do not overfill. If frequent additions are required, have the system inspected by a professional workshop. Kia recommends to visit an authorized Kia dealer/service partner.

Recommended coolant

- When adding coolant, use only deionized water or soft water for your vehicle and never mix hard water in the coolant filled at the factory. An improper coolant mixture can result in serious malfunction or engine damage.
- The engine in your vehicle has aluminum engine parts and must be protected by an ethylene-glycol with phosphate based coolant to prevent corrosion and freezing.
- DO NOT USE alcohol or methanol coolant or mix them with the specified coolant.
- Do not use a solution that contains more than 60% antifreeze or less than 35% antifreeze, which would reduce the effectiveness of the solution.

For mixture percentage, refer to the following table.

Ambient Temperature	Mixture Percentage (volume)	
	Antifreeze	Water
-15°C (5°F)	35	65
-25°C (-13°F)	40	60

Ambient Temperature	Mixture Percentage (volume)	
	Antifreeze	Water
-35°C (-31°F)	50	50
-45°C (-49°F)	60	40

■ Engine coolant reservoir cap

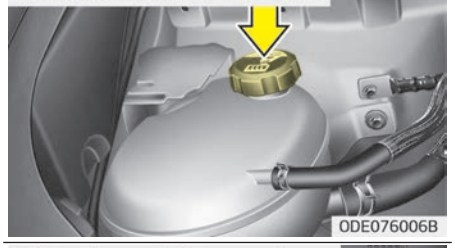

■ Inverter coolant reservoir cap

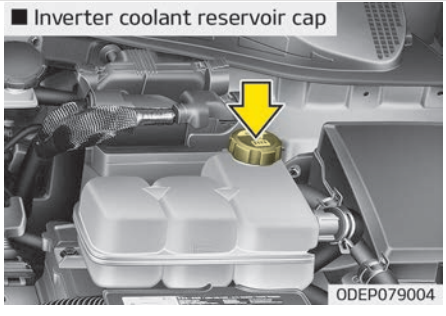

⚠ WARNING

Radiator cap

Do not remove the radiator cap when the engine and radiator are hot. Scalding hot coolant and steam may blow out under pressure causing serious injury.

✻ NOTICE

Make sure the coolant cap is properly closed after refill of coolant. Otherwise the engine could be overheated while driving.

(Continued)

(Continued)

■ Engine room front view

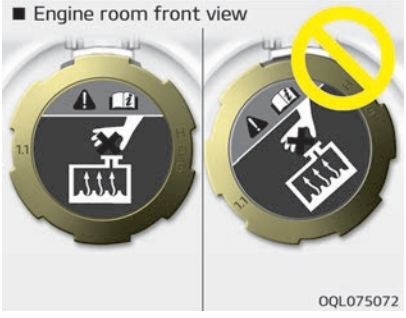

1. Check if the radiator cap label is straight In front.

■ Engine room rear view

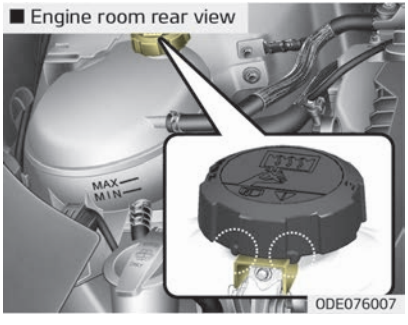

(Continued)

(Continued)

2. Make sure that the tiny protrusions inside the coolant cap should be securely interlocked.

Changing the coolant

Have the coolant replaced by a professional workshop. Kia recommends to visit an authorized Kia dealer/service partner.

⚠ CAUTION

Put a thick cloth around the radiator cap before refilling the coolant in order to prevent the coolant from overflowing into engine parts such as the alternator.

⚠ WARNING

■ Coolant

- **Do not use radiator coolant or antifreeze in the washer fluid reservoir.**

(Continued)

(Continued)

- **Radiator coolant can severely obscure visibility when sprayed on the windshield and may cause loss of vehicle control or damage the paint and body trim.**

BRAKE FLUID

Checking the brake fluid level

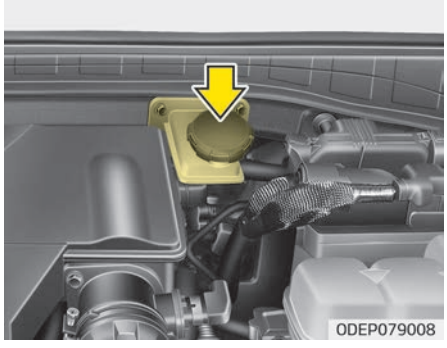

Check the fluid level in the reservoir periodically. The fluid level should be between MAX and MIN marks on the side of the reservoir.
Before removing the reservoir cap and adding brake fluid, clean the area around the reservoir cap thoroughly to prevent brake fluid contamination.
Periodically check that the fluid level in the brake fluid reservoir is between MIN and MAX. The level will fall with accumulated mileage. This is a normal condition associated with the wear of the brake linings.

If the fluid level is excessively low, have the system checked by a professional workshop. Kia recommends to visit an authorized Kia dealer/service partner.
Use only the specified brake fluid. (Refer to "Recommended lubricants or capacities." on page 9-13)
Never mix different types of fluid.

⚠ WARNING

■ Loss of brake fluid

In the event the brake system requires frequent additions of fluid, have the system inspected by a professional workshop. Kia recommends to visit an authorized Kia dealer/service partner.

⚠ WARNING

■ Brake fluid

When changing and adding brake fluid, handle it carefully. Do not let it come in contact with your eyes. If brake fluid should come in contact with your eyes, immediately flush

(Continued)

(Continued)

them with a large quantity of fresh tap water. Have your eyes examined by a doctor as soon as possible.

⚠ CAUTION

Do not allow brake fluid to contact the vehicle's body paint, as paint damage will result. Brake fluid, which has been exposed to open air for an extended time should never be used as its quality cannot be guaranteed. It should be properly disposed. Don't put in the wrong kind of fluid. A few drops of mineral based oil, such as engine oil, in your brake system can damage brake system parts.

ENGINE CLUTCH ACTUATOR FLUID

Checking the engine clutch actuator fluid level

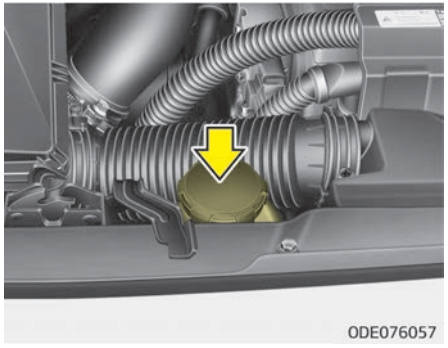

In normal driving conditions, the actuator fluid level does not go down rapidly. However, oil consumption rate may rise as vehicle mileage increases, and leakage in actuator related parts may result in increased consumption of the engine clutch actuator oil. Regularly check and make sure the engine clutch actuator oil fluid level is between MIN and MAX marks.
If the oil level is below MIN mark, have the vehicle checked by a professional workshop. Kia recommends to visit an authorized Kia dealer/service partner.
If the fluid level is excessively low, have the system checked by a professional workshop. Kia recommends to visit an authorized Kia dealer/service partner.
Use only the specified engine clutch actuator fluid.
(Refer to "Recommended lubricants or capacities." on page 9-13.)
Never mix different types of fluid.

⚠ WARNING

■ Loss of engine clutch actuator fluid

In the event the engine clutch actuator requires frequent additions of fluid, have the system inspected by a professional workshop. Kia recommends to visit an authorized Kia dealer/service partner.

⚠ WARNING

■ Engine clutch actuator fluid

When changing and adding engine clutch actuator fluid, handle it carefully. Do not let it come in contact

(Continued)

(Continued)

with your eyes. If engine clutch actuator fluid should come in contact with your eyes, immediately flush them with a large quantity of fresh tap water. Have your eyes examined by a doctor as soon as possible.

⚠ CAUTION

Do not allow engine clutch actuator fluid to contact the vehicle's body paint, as paint damage will result. The engine clutch actuator fluid, which has been exposed to open air for an extended time should never be used as its quality cannot be guaranteed. It should be properly disposed. Don't put in the wrong kind of fluid. A few drops of mineral-based oil, such as engine oil, in your engine clutch actuator system can damage engine clutch actuator system parts.

WASHER FLUID

Checking the washer fluid level

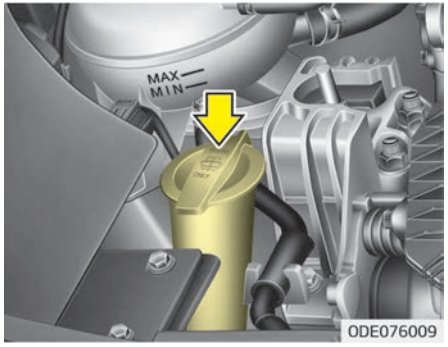

The reservoir is translucent so that you can check the level with a quick visual inspection.
Check the fluid level in the washer fluid reservoir and add fluid if necessary. Plain water may be used if washer fluid is not available. However, use washer solvent with antifreeze characteristics in cold climates to prevent freezing.

⚠ WARNING

■ Coolant

- **Do not use radiator coolant or antifreeze in the washer fluid reservoir.**
- **Radiator coolant can severely obscure visibility when sprayed on the windshield and may cause loss of vehicle control or damage to paint and body trim.**
- **Windshield Washer fluid agents contain some amounts of alcohol and can be flammable under certain circumstances. Do not allow sparks or flame to contact the washer fluid or the washer fluid reservoir. Damage to the vehicle or occupants could occur.**
- **Windshield washer fluid is poisonous to humans and animals. Do not drink and avoid contacting windshield washer fluid. Serious injury or death could occur.**

PARKING BRAKE

Checking the parking brake (if equipped)

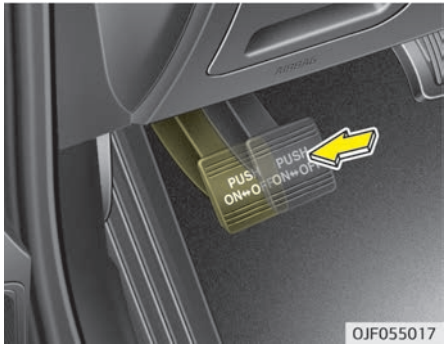

Check whether the stroke is within specification when the parking brake pedal is depressed with 30 kg (66 lb, 294 N) of force. Also, the parking brake alone should securely hold the vehicle on a fairly steep grade. If the stroke is more or less than specified, have the system serviced by a professional workshop. Kia recommends to visit an authorized Kia dealer/service partner.

Stroke : 6~7 notch

AIR CLEANER

Filter replacement

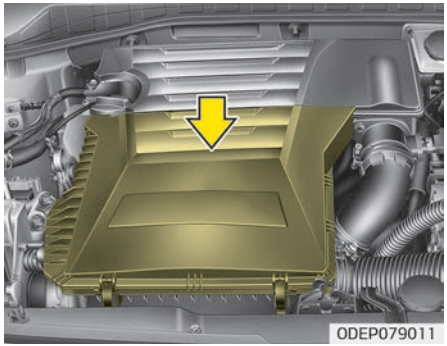

It must be replaced when necessary, and should not be washed.
You can clean the filter when inspecting the air cleaner element.
Clean the filter by using compressed air.

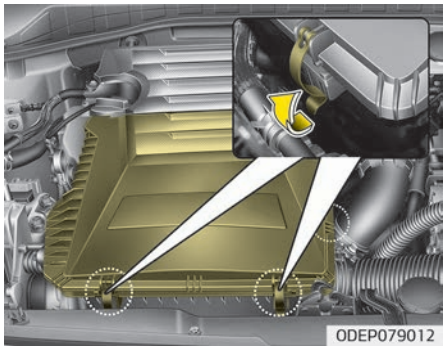

1. Loosen the air cleaner cover attaching clips and open the cover.

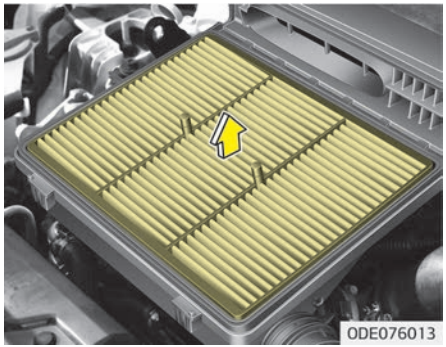

2. Wipe the inside of the air cleaner.
3. Replace the air cleaner filter.
4. Lock the cover with the cover attaching clips.

Replace the filter according to the Maintenance Schedule.
If the vehicle is operated in extremely dusty or sandy areas, replace the element more often than the usual recommended intervals. (Refer to "Maintenance under severe usage conditions" on page 8-23.)

⚠ CAUTION

- **Do not drive with the air cleaner removed; this will result in excessive engine wear.**
- **When removing the air cleaner filter, be careful that dust or dirt does not enter the air intake, or damage may result.**
- **Use parts for replacement from a professional workshop. Kia recommends to visit an authorized Kia dealer/service partner.**

CLIMATE CONTROL AIR FILTER

Filter inspection

The climate control air filter should be replaced according to the maintenance schedule. If the vehicle is operated in severely air-polluted cities or on dusty rough roads for a long period, it should be inspected more frequently and replaced earlier. When you replace the climate control air filter, replace it performing the following procedure, and be careful to avoid damaging other components.

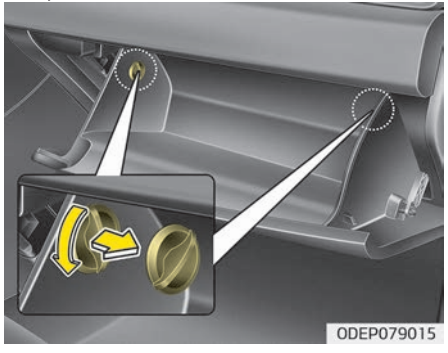

1. Open the glove box and remove the stoppers on both sides.

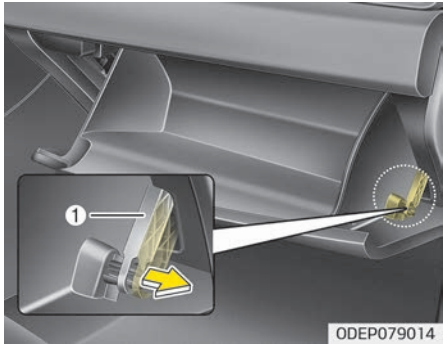

2. With the glove box open, pull the support strap (1).

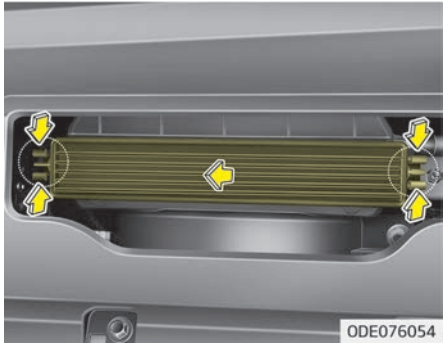

3. Remove the climate control air filter cover while pressing the lock on the both sides of the cover.

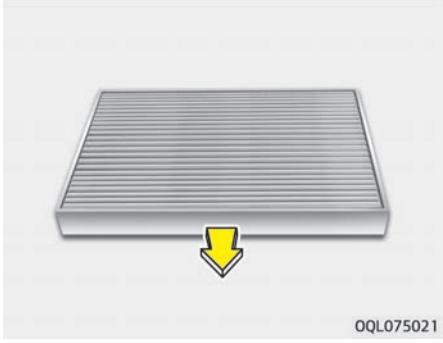

4. Replace the climate control air filter.
5. Reassemble in the reverse order of disassembly.

✻ NOTICE

When replacing the climate control air filter install it properly. Otherwise, the system may produce noise and the effectiveness of the filter may be reduced.

WIPER BLADES

Blade inspection

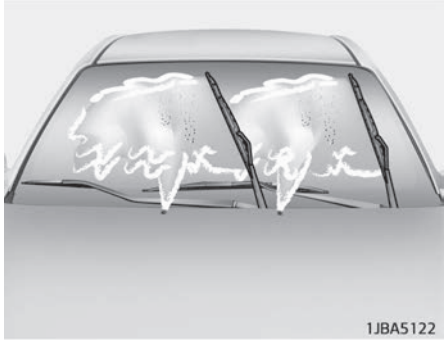

✻ NOTICE

Commercial hot waxes applied by automatic car washes have been known to make the windshield difficult to clean.

Contamination of either the windshield or the wiper blades with foreign matter can reduce the effectiveness of the windshield wipers. Common sources of contamination are insects, tree sap, and hot wax treatments used by some commercial car washes. If the blades are not wiping properly, clean both the window and the blades with a good cleaner or mild detergent, and rinse thoroughly with clean water.

⚠ CAUTION

To prevent damage to the wiper blades, do not use gasoline, kerosene, paint thinner, or other solvents on or near them.

Blade replacement

When the wipers no longer clean adequately, the blades may be worn or cracked, and require replacement.

⚠ CAUTION

To prevent damage to the wiper arms or other components, do not

(Continued)

(Continued)

attempt to move the wipers manually.

⚠ CAUTION

The use of a non-specified wiper blade could result in wiper malfunction and failure.

Front windshield wiper blade

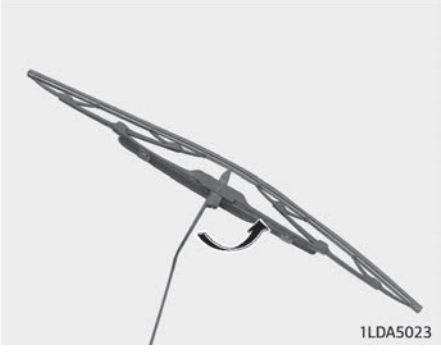

Type A

1. Raise the wiper arm and turn the wiper blade assembly to expose the plastic locking clip.

⚠ CAUTION

Do not allow the wiper arm to fall against the windshield, since it may chip or crack the windshield.

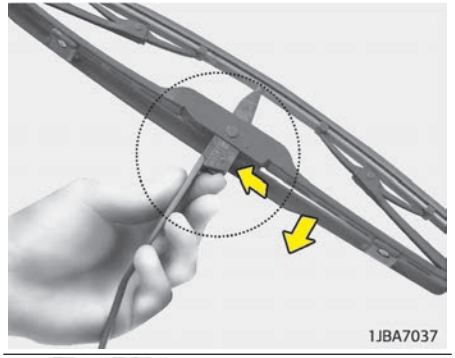

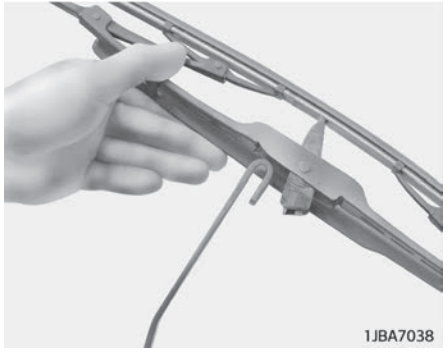

2. Compress the clip and slide the blade assembly downward.
3. Lift it off the arm.
4. Install the blade assembly in the reverse order of removal.

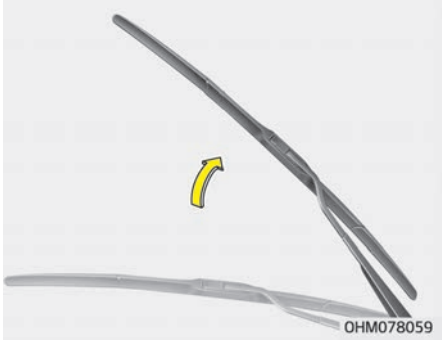

Type B

1. Raise the wiper arm.

⚠ CAUTION

Do not allow the wiper arm to fall against the windshield, since it may chip or crack the windshield.

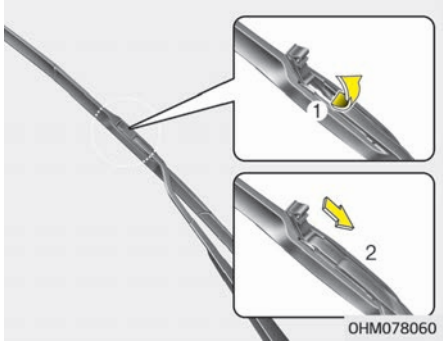

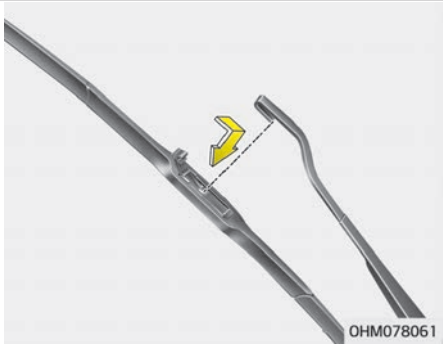

2. Lift up the wiper blade clip. Then pull down the blade assembly and remove it.
3. Install the new blade assembly.

Rear window wiper blade

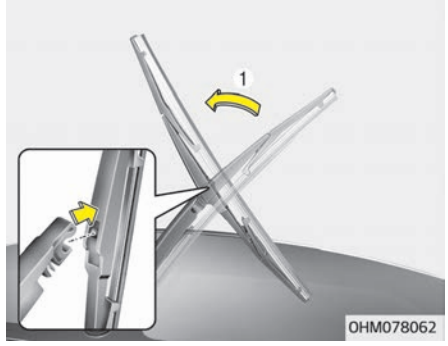

1. Raise the wiper arm and pull out the wiper blade assembly.

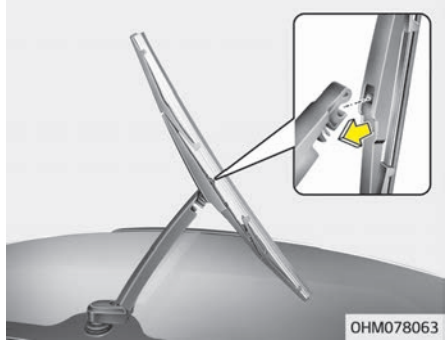

2. Install the new blade assembly by inserting the center part into the slot in the wiper arm until it clicks into place.
3. Make sure the blade assembly is installed firmly by trying to pull it slightly.

To prevent damage to the wiper arms or other components, have the wiper blade replaced by a professional workshop. Kia recommends to visit an authorized Kia dealer/service partner.

BATTERY (PLUG-IN HYBRID)

For best battery service

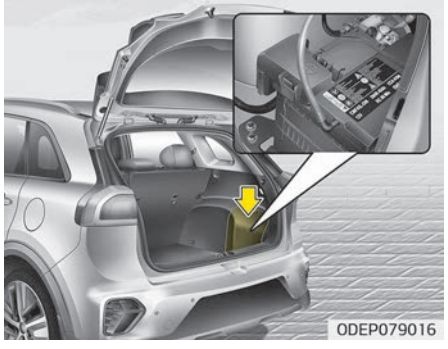

- Keep the battery securely mounted.
- Keep the battery top clean and dry.
- Keep the terminals and connections clean, tight, and coated with petroleum jelly or terminal grease.
- Rinse any spilled electrolyte from the battery immediately with a solution of water and baking soda.
- If the vehicle is not going to be used for an extended time, disconnect the battery cables.

✻ NOTICE

Basically equipped battery is maintenance free type. If your vehicle is equipped with the battery marked with LOWER and UPPER on the side, you can check the electrolyte level. The electrolyte level should be between LOWER and UPPER. If the electrolyte level is low, it needs to add distilled (demineralized) water (Never add sulfuric acid or other electrolyte). When refill, be careful not to splash the battery and adjacent components. And do not overfill the battery cells. It can cause corrosion on other parts. Then make sure to tighten the cell caps. Contact a professional workshop. Kia recommends to visit an authorized Kia dealer/service partner.

⚠ WARNING

■ Battery dangers

(Continued)

(Continued)

Always read the following instructions carefully when handling a battery.

Keep lighted cigarettes and all other flames or sparks away from the battery.

Hydrogen, a highly combustible gas, is always present in battery cells and may explode if ignited.

Keep batteries out of the reach of children because batteries contain highly corrosive SULFURIC ACID. Do not allow battery acid to contact your skin, eyes, clothing or paint finish.

(Continued)

(Continued)

If any electrolyte gets into your eyes, flush your eyes with clean water for at least 15 minutes and get immediate medical attention.
If electrolyte gets on your skin, thoroughly wash the contacted area. If you feel pain or burning sensation, get medical attention immediately.

Wear eye protection when charging or working near a battery. Always provide ventilation when working in an enclosed space.

An inappropriately disposed battery can be harmful to the environment and human health. Dispose the battery according to your local law(s) or regulation.

The battery contains lead. Do not dispose of it after use. Contact a professional workshop. Kia recommends to visit an authorized Kia dealer/service partner.

(Continued)

(Continued)

- **When lifting a plastic-cased battery, excessive pressure on the case may cause battery acid to leak, resulting in personal injury. Lift with a battery carrier or with your hands on opposite corners.**
- **Never attempt to recharge the battery when the battery cables are connected.**
- **The electrical ignition system works with high voltage. Never touch these components with the engine running or the ignition switched on.**

Failure to follow the above warnings can result in serious bodily injury or death.

⚠ CAUTION

- **When you don't use the vehicle for a long time in the low temperature area, separate the battery and keep it indoors.**

(Continued)

(Continued)

- **Always charge the battery fully to prevent battery case damage in low temperature area.**
- **If you connect unauthorized electronic devices to the battery, the battery may be discharged. Never use unauthorized devices.**

Battery capacity label

■ Example

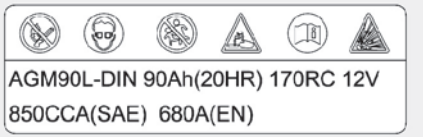

OUM074113L

❊ The actual battery label in the vehicle may differ from the illustration.

1. AGM90L-DIN : The Kia model name of battery
2. 90Ah(20HR) : The nominal capacity (in Ampere hours)
3. 170RC : The nominal reserve capacity (in min.)
4. 12V : The nominal voltage
5. 850CCA (SAE) : The cold-test current in amperes by SAE
6. 680A : The cold-test current in amperes by EN

Battery recharging

Your vehicle has a maintenance-free, calcium-based battery.

- If the battery becomes discharged in a short time (because, for example, the headlights or interior lights were left on while the vehicle was not in use), recharge it by slow charging (trickle) for 10 hours.
- If the battery gradually discharges because of high electric load while the vehicle is being used, recharge it at 20-30A for two hours.

⚠ WARNING

■ Recharging battery

When recharging the battery, observe the following precautions:

- **The battery must be removed from the vehicle and placed in an area with good ventilation.**
- **Do not allow cigarettes, sparks, or flame near the battery.**
- **Watch the battery during charging, and stop or reduce the charging rate if the battery cells begin gassing (boiling) violently or if the temperature of the electrolyte of any cell exceeds 49°C (120°F).**
- **Wear eye protection when checking the battery during charging.**
- **Disconnect the battery charger in the following order.**
  1. **Turn off the battery charger main switch.**
  2. **Unhook the negative clamp from the negative battery terminal.**

(Continued)

(Continued)

3. **Unhook the positive clamp from the positive battery terminal.**

⚠ WARNING

- **Before performing maintenance or recharging the battery, turn off all accessories and stop the engine.**
- **The negative battery cable must be removed first and installed last when the battery is disconnected.**
- **Operation related to the battery is recommended to be done by a professional workshop. Kia recommends to visit an authorized Kia dealer/service partner.**

⚠ **CAUTION**

- **Keep the battery away from water or any liquid.**
- **For your safety, use parts for replacement from a professional workshop. Kia recommends to visit an authorized Kia dealer/service partner.**

Reset items

Items should be reset after the battery has been discharged or the battery has been disconnected.

- Auto up/down window
- Sunroof
- Trip computer
- Climate control system
- Driver position Memory System
- Audio

TIRES AND WHEELS

Tire care

For proper maintenance, safety, and maximum fuel economy, you must always maintain recommended tire inflation pressures and stay within the load limits and weight distribution recommended for your vehicle.

Recommended cold tire inflation pressures

All tire pressures (including the spare) should be checked when the tires are cold. "Cold Tires" means the vehicle has not been driven for at least three hours or driven less than 1.6 km (1 mile).
Recommended pressures must be maintained for the best ride, top vehicle handling, and minimum tire wear.
For recommended inflation pressure, refer to "Tires and wheels (for Europe)" on page 9-09, "Tires and wheels (except Europe)" on page 9-11.

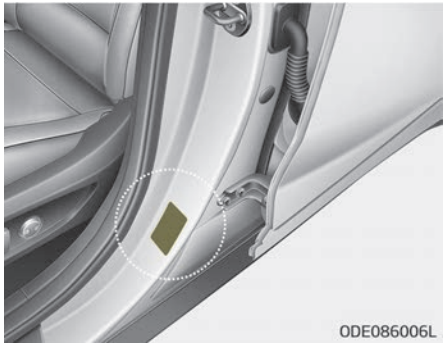

All specifications (sizes and pressures) can be found on a label attached to the vehicle.

⚠ WARNING

■ Tire under-inflation

Severe underinflation (70 kPa (10 psi) or more) can lead to severe heat build-up, causing blowouts, tread separation and other tire failures that can result in the loss of vehicle control leading to severe injury or death. This risk is much higher on

(Continued)

(Continued)

hot days and when driving for long periods at high speeds.

⚠ CAUTION

- **Underinflation also results in excessive wear, poor handling and reduced fuel economy. Wheel deformation also is possible. Keep your tire pressures at the proper levels. If a tire frequently needs refilling, have the system checked by a professional workshop. Kia recommends to visit an authorized Kia dealer/service partner.**
- **Overinflation produces a harsh ride, excessive wear at the center of the tire tread, and a greater possibility of damage from road hazards.**

(Continued)

(Continued)

- **Warm tires normally exceed recommended cold tire pressures by 28 to 41 kPa (4 to 6 psi). Do not release air from warm tires to adjust the pressure or the tires will be underinflated.**
- **Be sure to reinstall the tire inflation valve caps. Without the valve cap, dirt or moisture could get into the valve core and cause air leakage. If a valve cap is missing, install a new one as soon as possible.**

⚠ WARNING

■ Tire Inflation

Overinflation or underinflation can reduce tire life, adversely affect vehicle handling, and lead to sudden tire failure. This could result in loss of vehicle control and potential injury.

⚠ CAUTION

■ Tire pressure

Always observe the following:

- **Check tire pressure when the tires are cold. (After vehicle has been parked for at least three hours or hasn't been driven more than 1.6 km (1 mile) since startup.)**
- **Check the pressure of your spare tire each time you check the pressure of other tires.**
- **Never overload your vehicle. Be careful not to overload a vehicle luggage rack if your vehicle is equipped with one.**
- **Worn, old tires can cause accidents. If your tread is badly worn, or if your tires have been damaged, replace them.**

Checking tire inflation pressure

Check your tires once a month or more. Also, check the tire pressure of the spare tire.

How to check

Use a good quality gauge to check tire pressure. You can not tell if your tires are properly inflated simply by looking at them. Radial tires may look properly inflated even when they're underinflated.

Check the tire's inflation pressure when the tires are cold. - "Cold" means your vehicle has been sitting for at least three hours or driven no more than 1.6 km (1 mile).

Remove the valve cap from the tire valve stem. Press the tire gauge firmly onto the valve to get a pressure measurement. If the cold tire inflation pressure matches the recommended pressure on the tire and loading information label, no further adjustment is necessary. If the pressure is low, add air until you reach the recommended amount.

If you overfill the tire, release air by pushing on the metal stem in the center of the tire valve. Recheck the tire pressure with the tire gauge. Be sure to put the valve caps back on the valve stems. They help prevent leaks by keeping out dirt and moisture.

⚠ WARNING

- **Inspect your tires frequently for proper inflation as well as wear and damage. Always use a tire pressure gauge.**
- **Tires with too much or too little pressure wear unevenly causing poor handling, loss of vehicle control, and sudden tire failure leading to accidents, injuries, and even death. The recommended cold tire pressure for your vehicle can be found in this manual and on the tire label located on the driver's side center pillar.**
- **Worn tires can cause accidents. Replace tires that are worn, show uneven wear, or are damaged.**
- **Remember to check the pressure of your spare tire. Kia recommends that you check the spare every time you check the pressure of the other tires on your vehicle.**

Tire rotation

To equalize tread wear, it is recommended that the tires be rotated every 10,000 km (6,500 miles) or sooner if irregular wear develops.
During rotation, check the tires for correct balance.
When rotating tires, check for uneven wear and damage. Abnormal wear is usually caused by incorrect tire pressure, improper wheel alignment, out-of- balance wheels, severe braking or severe cornering. Look for bumps or bulges in the tread or side of tire. Replace the tire if you find either of these conditions. Replace the tire if fabric or cord is visible. After rotation, be sure to bring the front and rear tire pressures to specification and check lug nut tightness.
Refer to "Tire and wheels" on pages 9-09; 9-11 .

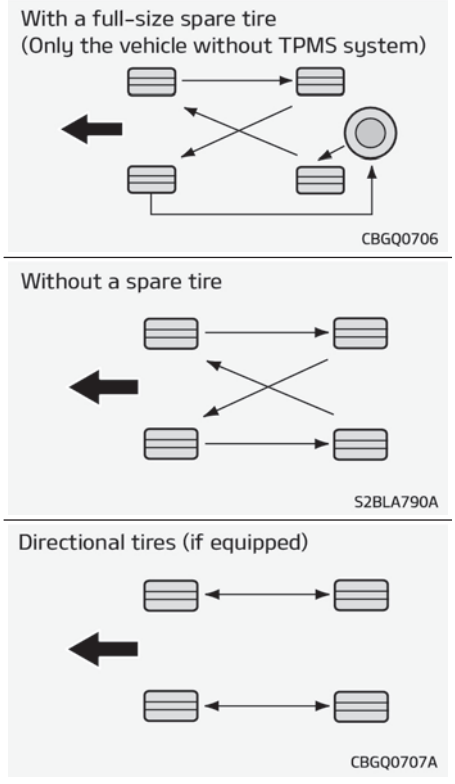

Disc brake pads should be inspected for wear whenever tires are rotated.

✻ NOTICE

Rotate radial tires that have an asymmetric tread pattern only from front to rear and not from right to left.

⚠ WARNING

- **Do not use the compact spare tire (if equipped) for tire rotation.**
- **Do not mix bias ply and radial ply tires under any circumstances. This may cause unusual handling characteristics that could result in death, severe injury, or property damage.**

Wheel alignment and tire balance

The wheels on your vehicle were aligned and balanced carefully at the factory to give you the longest tire life and best overall performance.

In most cases, you will not need to have your wheels aligned again. However, if you notice unusual tire wear or your vehicle pulling one way or the other, the alignment may need to be reset.
If you notice your vehicle vibrating when driving on a smooth road, your wheels may need to be rebalanced.

⚠ CAUTION

Improper wheel weights can damage your vehicle's aluminum wheels. Use only approved wheel weights.

Tire replacement

If the tire is worn evenly, a tread wear Indicator (A) will appear as a solid band across the tread. This shows there is less than 1.6 mm (1/16 in.) of tread left on the tire. Replace the tire when this happens.
Do not wait for the band to appear across the entire tread before replacing the tire.

NOTICE

We recommend that when replacing tires, use the same originally supplied with the vehicles.
If not, that affects driving performance.

CAUTION

When replacing the tires, recheck and tighten the wheel nuts after driving about 50 km (31 miles) and recheck after driving about 1,000 km (620 miles). If the steering wheel shakes or the vehicle vibrates while driving, the tire is out of balance. Align the tire balance. If the problem is not solved, contact a professional workshop. Kia recommends to visit an authorized Kia dealer/service partner.

WARNING

■ Replacing tires

(Continued)

(Continued)

To reduce the chance of serious or fatal injuries from an accident caused by tire failure or loss of vehicle control:

- **Replace tires that are worn, show uneven wear, or are damaged. Worn tires can cause loss of braking effectiveness, steering control, and traction.**
- **Do not drive your vehicle with too little or too much pressure in your tires. This can lead to uneven wear and tire failure.**
- **When replacing tires, never mix radial and bias-ply tires on the same car. You must replace all tires (including the spare) if moving from radial to bias-ply tires.**
- **Using tires and wheels other than the recommended sizes could cause unusual handling characteristics and poor vehicle control, resulting in a serious accident.**

(Continued)

(Continued)

- **Wheels that do not meet Kia's specifications may fit poorly and result in damage to the vehicle or unusual handling and poor vehicle control.**
- **The ABS works by comparing the speed of the wheels. The tire size affects wheel speed. When replacing tires, all 4 tires must use the same size originally supplied with the vehicle. Using tires of a different size can cause the ABS (Anti-lock Brake System) and ESC (Electronic Stability Control) to work irregularly.**

Compact spare tire replacement (if equipped)

A compact spare tire has a shorter tread life than a regular size tire. Replace it when you can see the tread wear indicator bars on the tire. The replacement compact spare tire should be the same size and design tire as the one provided with your new vehicle and should be mounted on the same compact spare tire wheel. The compact spare tire is not designed to be mounted on a regular size wheel, and the compact spare tire wheel is not designed for mounting a regular size tire.

Wheel replacement

When replacing the metal wheels for any reason, make sure the new wheels are equivalent to the original factory units in diameter, rim width and offset.

⚠ WARNING

A wheel that is not the correct size may adversely affect wheel and bearing life, braking and stopping abilities, handling characteristics, ground clearance, body-to-tire

(Continued)

(Continued)

clearance, snow chain clearance, speedometer and odometer calibration, headlight aim and bumper height.

Tire traction

Tire traction can be reduced if you drive on worn tires, tires that are improperly inflated or on slippery road surfaces. Tires should be replaced when tread wear indicators appear. Slow down whenever there is rain, snow or ice on the road to reduce the possibility of losing control of the vehicle.

Tire maintenance

In addition to proper inflation, correct wheel alignment helps to decrease tire wear. If you find a tire is worn unevenly, have a professional workshop check the wheel alignment. Kia recommends to visit an authorized Kia dealer/service partner.

When you have new tires installed, make sure they are balanced. This will increase vehicle ride comfort and tire life. Additionally, a tire should always be rebalanced if it is removed from the wheel.

Tire sidewall labeling

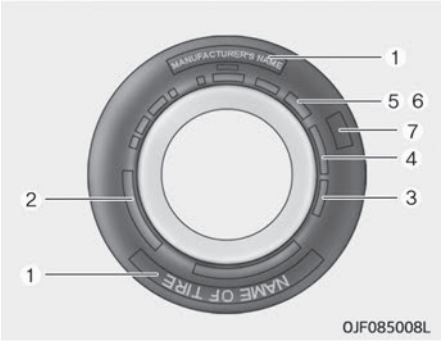

This information identifies and describes the fundamental characteristics of the tire and also provides the tire identification number (TIN) for safety standard certification. The TIN can be used to identify the tire in case of a recall.

1. Manufacturer or brand name

Manufacturer or Brand name is shown.

2. Tire size designation

A tire's sidewall is marked with a tire size designation. You will need this information when selecting replacement tires for your vehicle. The following explains what the letters and numbers in the tire size designation mean.
Example tire size designation:
(These numbers are provided as an example only; your tire size designator could vary depending on your vehicle.)

P235/55R19 108T

- P - Applicable vehicle type (tires marked with the prefix "P" are intended for use on passenger vehicles or light trucks; however, not all tires have this marking).
- 235 - Tire width in millimeters.
- 55 - Aspect ratio. The tire's section height as a percentage of its width.
- R - Tire construction code (Radial).
- 19 - Rim diameter in inches.
- 108 - Load Index, a numerical code associated with the maximum load the tire can carry.
- T - Speed Rating Symbol. See the speed rating chart in this section for additional information.

Wheel size designation

Wheels are also marked with important information that you need if you ever have to replace one. The following explains what the letters and numbers in the wheel size designation mean.
Example wheel size designation:

7.5JX19

- 7.5 - Rim width in inches.
- J - Rim contour designation.
- 19 - Rim diameter in inches.

Tire speed ratings

The chart below lists many of the different speed ratings currently being used for passenger car tires. The speed rating is part of the tire size designation on the sidewall of the tire. This symbol corresponds to that tire's designed maximum safe operating speed.

Speed Rating Symbol	Maximum Speed
S	180 km/h (112 mph)
T	190 km/h (118 mph)
H	210 km/h (130 mph)
V	240 km/h (149 mph)
W	270 km/h (168 mph)
Y	300 km/h (186 mph)

3. Checking tire life (TIN : Tire Identification Number)

Any tires that are over 6 years old, based on the manufacturing date, (including the spare tire) should be replaced by new ones. You can find the manufacturing date on the tire sidewall (possibly on the inside of the wheel), displaying the DOT Code. The DOT Code is a series of numbers on a tire consisting of numbers and English letters. The manufacturing date is designated by the last four digits (characters) of the DOT code.

DOT : XXXX XXXX 0000

The front part of the DOT means a plant code number, tire size and tread pattern and the last four numbers indicate week and year manufactured.
For example:
DOT XXXX XXXX 1621 represents that the tire was produced in the 16th week of 2021.

⚠ WARNING

■ Tire age

Tires degrade over time, even when they are not being used.
Regardless of the remaining tread, we recommend that tires be replaced after approximately six (6) years of normal service. Heat caused by hot climates or frequent high loading conditions can accelerate the aging process. Failure to follow this warning can result in sudden tire failure, which could lead to a loss of control and an accident involving serious injury or death.

4. Tire ply composition and material

The number of layers or plies of rubber- coated fabric in the tire. Tire manufacturers also must indicate the materials in the tire, which include steel, nylon, polyester, and others. The letter "R" means radial ply construction; the letter "D" means diagonal or bias ply construction; and the letter "B" means belted-bias ply construction.

5. Maximum permissible inflation pressure

This number is the greatest amount of air pressure that should be put in the tire. Do not exceed the maximum permissible inflation pressure. Refer to the Tire and Loading Information label for recommended inflation pressure.

6. Maximum load rating

This number indicates the maximum load in kilograms and pounds that can be carried by the tire. When replacing the tires on the vehicle, always use a tire that has the same load rating as the factory installed tire.

7. Uniform tire quality grading

Quality grades can be found where applicable on the tire sidewall between tread shoulder and maximum section width.
For example:
TREADWEAR 200
TRACTION AA
TEMPERATURE A

Tread wear

The tread wear grade is a comparative rating based on the wear rate of the tire when tested under controlled conditions on a specified government test course. For example, a tire graded 150 would wear one-and-a-half times (1½) as well on the government course as a tire graded 100.
The relative performance of tires depends upon the actual conditions of their use, however, and may depart significantly from the norm due to variations in driving habits, service practices and differences in road characteristics and climate.
These grades are molded on the sidewalls of passenger vehicle tires. The tires available as standard or optional equipment on your vehicle may vary with respect to grade.

Traction - AA, A, B & C

The traction grades, from highest to lowest, are AA, A, B and C. Those grades represent the tire's ability to stop on wet pavement as measured under controlled conditions on specified government test surfaces of asphalt and concrete. A tire marked C may have poor traction performance.

Temperature - A, B & C

The temperature grades are A (the highest), B, and C, representing the tire's resistance to the generation of heat and its ability to dissipate heat when tested under controlled conditions on a specified indoor laboratory test wheel.
Sustained high temperature can cause the material of the tire to degenerate and reduce tire life, and excessive temperature can lead to sudden tire failure. Grades B and A represent higher levels of performance on the laboratory test wheel than the minimum required by law.

⚠ WARNING

The traction grade assigned to this tire is based on straight-ahead braking traction tests, and does not include acceleration, cornering, hydroplaning, or peak traction characteristics.

⚠ WARNING

■ Tire temperature

The temperature grade for this tire is established for a tire that is properly inflated and not overloaded. Excessive speed, under inflation, or excessive loading, either separately or in combination, can cause heat build-up in tire and sudden tire failure. This can cause loss of vehicle control and serious injury or death.

Low aspect ratio tire (if equipped)

Low aspect ratio tires, whose aspect ratio is lower than 50, are provided for sporty looks.
Because the low aspect ratio tires are optimized for handling and braking, it may be more uncomfortable to ride in and there is more noise compare with normal tires.

⚠ CAUTION

Because the sidewall of the low aspect ratio tire is shorter than the normal, the wheel and tire of the low aspect ratio tire is easier to be damaged. So, follow the instructions below.

- **When driving on a rough road or off road, drive cautiously because tires and wheels may be damaged. And after driving, inspect tires and wheels.**
- **When passing over a pothole, speed bump, manhole, or curb stone, drive slowly so that the tires and wheels are not damaged.**
- **If the tire is impacted, inspect the tire condition or contact a professional workshop. Kia recommends to visit an authorized Kia dealer/service partner.**
- **To prevent damage to the tire, inspect the tire condition and pressure every 3,000 km (1,900 miles).**

(Continued)

(Continued)

- **It is not easy to recognize the tire damage with your own eyes. But if there is the slightest hint of tire damage, even though you cannot see the tire damage with your own eyes, have the tire checked or replaced because the tire damage may cause air leakage from the tire.**
- **If the tire is damaged by driving on a rough road, off road, pothole, manhole, or curb stone, it will not be covered by the warranty.**
- **You can find out the tire information on the tire sidewall.**

FUSES

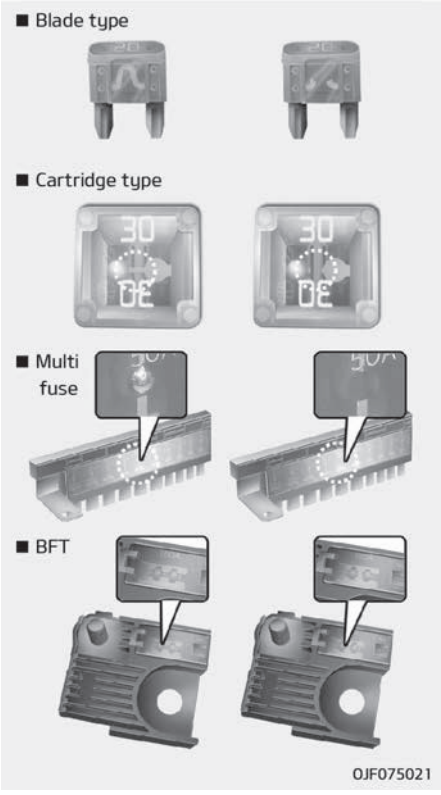

Right side: blown

A vehicle's electrical system is protected from electrical overload damage by fuses.

This vehicle has 2 (or 3) fuse panels, one located in the driver's side panel bolster, the others in the engine compartment near the battery.

If any of your vehicle's lights, accessories, or controls do not work, check the appropriate circuit fuse. If a fuse has blown, the element inside the fuse will melt.

If the electrical system does not work, first check the driver's side fuse panel.

Before replacing a blown fuse, disconnect the negative battery cable.

Always replace a blown fuse with one of the same rating.

If the replacement fuse blows, this indicates an electrical problem. Avoid using the system involved and immediately consult a professional workshop. Kia recommends to consult an authorized Kia dealer/service partner.

Three kinds of fuses are used: blade type for lower amperage rating, cartridge type, and multi fuse for higher amperage ratings.

⚠ WARNING

■ Fuse replacement

- **Never replace a fuse with anything but another fuse of the same rating.**
- **A higher capacity fuse could cause damage and possibly a fire.**
- **Never install a wire or aluminum foil instead of the proper fuse even as a temporary repair. It may cause extensive wiring damage and a possible fire.**
- **Do not arbitrarily modify or add-on electric wiring of the vehicle.**

⚠ CAUTION

Do not use a screwdriver or any other metal object to remove fuses because it may cause a short circuit and damage the system.

❊ Left side: Normal

✻ NOTICE

The actual fuse/relay panel label may differ from equipped items.

⚠ CAUTION

- **When replacing a blown fuse or relay with a new one, make sure the new fuse or relay fits tightly into the clips. The incomplete fastening fuse or relay may cause the vehicle wiring and electric systems damage and a possible fire.**
- **Do not remove fuses, relays and terminals fastened with bolts or nuts. The fuses, relays and terminals may be fastened incompletely, and it may cause a possible fire. If fuses, relays and terminals fastened with bolts or nuts are blown, consult a professional workshop. Kia recommends to consult an authorized Kia dealer/service partner.**

(Continued)

(Continued)

- **Do not input any other objects except fuses or relays into fuse/relay terminals such as a driver or wiring. It may cause contact failure and system malfunction.**
- **Do not plug in screwdrivers or aftermarket wiring into the terminal originally designed for fuse and relays only. The electrical system and wiring of the vehicle interior may be damaged or burned due to contact failure.**

Inner panel fuse replacement

1. Turn the ignition switch and all other switches off.
2. Open the fuse panel cover.
   If the switch is located in the "OFF", caution will be displayed in the cluster.

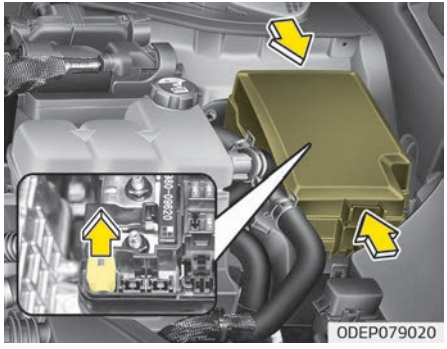

3. Pull the suspected fuse straight out. Use the removal tool provided in the main fuse box in the engine compartment.
4. Check the removed fuse; replace it if it is blown.
   Spare fuses are provided in the instrument panel fuse panel (or in the engine compartment fuse panel).

5. Push in a new fuse of the same rating, and make sure it fits tightly in the clips.

If it fits loosely, consult a professional workshop. Kia recommends to consult an authorized Kia dealer/service partner.
If you do not have a spare, use a fuse of the same rating from a circuit you may not need for operating the vehicle, such as the cigarette lighter fuse.
If the headlights or taillights, stoplights, courtesy lamp, day time running lights (D.R.L) do not work and the fuses are OK, check the fuse panel in the engine compartment. If a fuse is blown, it must be replaced.

Fuse switch

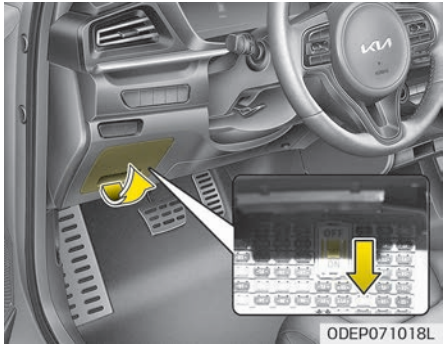

Always, put the fuse switch at the ON position.
If you move the switch to the OFF position, some items such as audio and digital clock must be reset and transmitter (or smart key) may not work properly.
If the fuse switch is in OFF, a warning sign will illuminate on the dashboard.

⚠ CAUTION

- **Put all switches in ON when driving.**
- **If the vehicle remains idle for over 1 month, put all switches in OFF to prevent the batteries from being discharged.**
- **Excluding long-term parking for over 1 month, the contact points of switches may wear out upon extensive use. Please refrain from excessive use of switches.**

Engine compartment fuse replacement

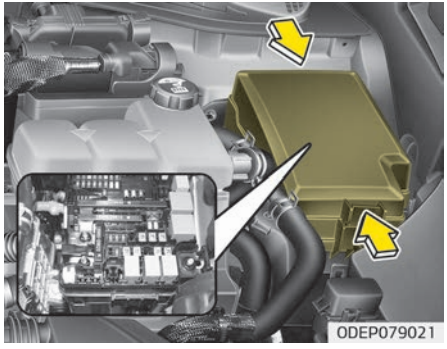

1. Turn the ignition switch and all other switches off.
2. Remove the fuse panel cover by pressing the tab and pulling the cover up. When the blade type fuse is disconnected, remove it by using the clip designed for changing fuses located in the engine room fuse box. Upon removal, securely insert reserve fuse of equal quantity.
3. Check the removed fuse; replace it if it is blown. To remove or insert the fuse, use the fuse puller in the engine compartment fuse panel.
4. Push in a new fuse of the same rating, and make sure it fits tightly in the clips. If it fits loosely, consult a professional workshop. Kia recommends to consult an authorized Kia dealer/service partner.

⚠ CAUTION

After checking the fuse panel in the engine compartment, securely install the fuse panel. If not, cover through the audible clicking sound. Electrical failures may occur from water contact.

Multi fuse

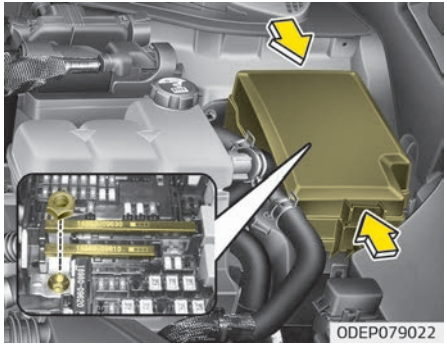

If the multi fuse is blown, it must be removed as follows:

1. Disconnect the negative battery cable.
2. Remove the nuts shown in the picture above.
3. Replace the fuse with a new one of the same rating.
4. Reinstall in the reverse order of removal.

✻ NOTICE

If the multi fuse is blown, consult a professional workshop. Kia recommends to consult an authorized Kia dealer/service partner.

Main fuse (Plug-in Hybrid)

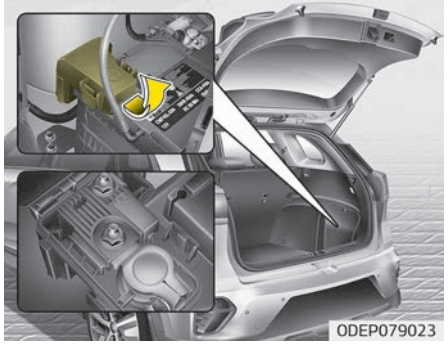

If the main fuse is blown, it must be removed as follows:

1. Turn off the engine.
2. Disconnect the negative battery cable.
3. Remove the nuts shown in the picture above.
4. Replace the fuse with a new one of the same rating.
5. Reinstall in the reverse order of removal.

✻ NOTICE

The electronic system may not function correctly even when the engine room and internal fuse box's individual fuses are not disconnected. In such case the cause of the problem may be disconnection of the main fuse (BFT type), which is located inside the positive battery terminal (+) cap. Since the main fuse is designed more intricately than other parts, visit a professional workshop. Kia recommends to visit the nearest authorized Kia dealer/service partner.

⚠ CAUTION

Visually inspect the battery cap for secure closing. If the battery cap is not securely latched, the electrical system may be damaged to due influx of moisture into the system.

Fuse/relay panel description

■ Driver's side fuse panel

■ Engine compartment fuse panel

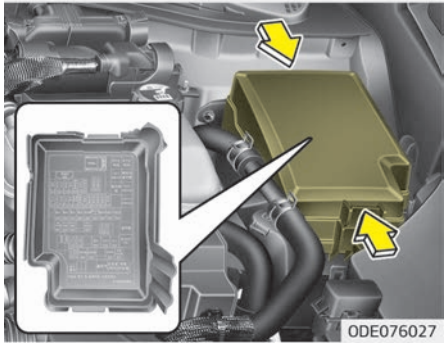

■ Battery terminal cover (Plug-in Hybrid)

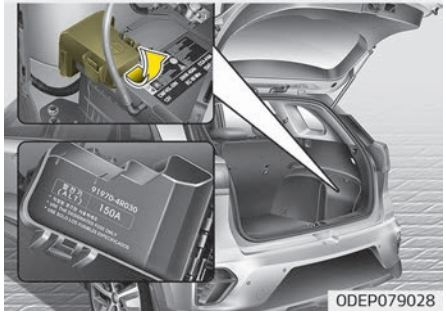

Inside the fuse/relay panel covers, you can find the fuse/relay label describing fuse/relay name and capacity.

✻ NOTICE

Not all fuse panel descriptions in this manual may be applicable to your vehicle. It is accurate at the time of printing. When you inspect the fuse panel in your vehicle, refer to the fuse panel label.

Driver's side fuse panel (Hybrid)

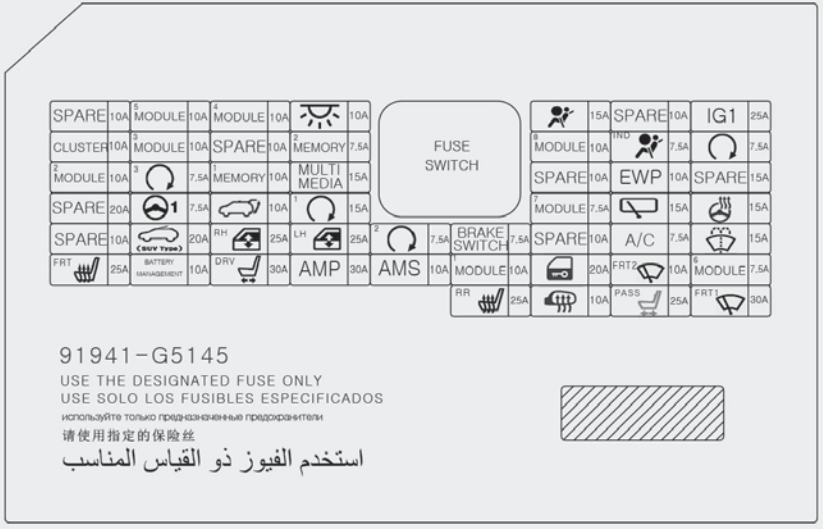

ODEP071120L

Driver's side fuse panel (plug-in hybrid)

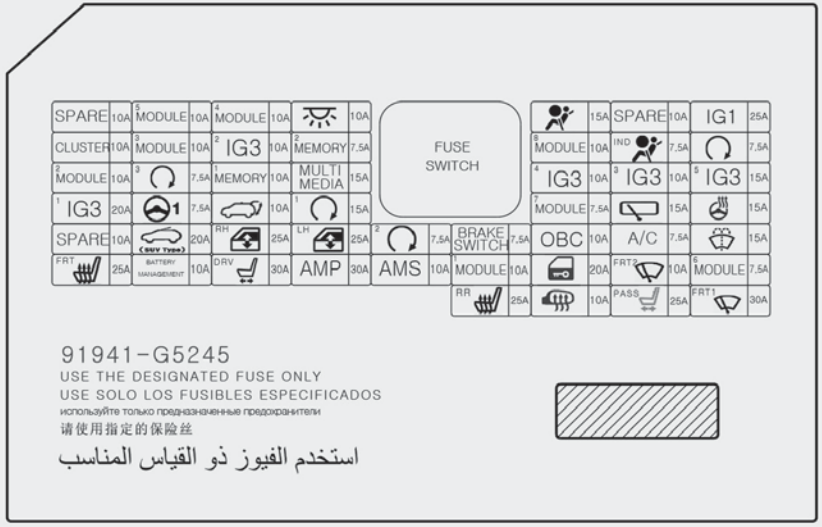

ODEP071119L

Instrument panel (Driver's side fuse panel) (Hybrid)

Fuse Name	Symbol	Fuse rat-ing	Circuit Protected
MODULE 5	5 MODULE	10A	Crash Pad Switch, Electro Chromic Mirror, Audio / Video &Navigation Head Unit, Audio, Air Conditioner Control Module, Head Lamp Leveling Device Actuator LH/RH, Driver IMS Module, Front Seat Warmer Control Module, Rear Seat Warmer Control Module, AMP, KEYBOARD, OBD
MODULE 4	4 MODULE	10A	Lane Departure Warning Control Module, Crash Pad Switch, Forward Collision-avoid-ance Assist (FCA) Module, Blind-spot Collision Warning (BCW) Radar Left Handle side/ Right Handle side, EPB, VESS
INTERIOR LAMP		10A	Luggage Lamp, Door Warning Switch, Front Vanity Lamp LH/RH, Room Lamp, Over-head Console Lamp, Rain Sensor, Mood Lamp, Wireless Charger
A/BAG		15A	ACU
IG 1	IG 1	25A	Engine Room Junction Block (Fuse - ECU3, HPCU2, ACTIVE HYDRAULIC BOOSTER 3, DCT4)
CLUSTER	CLUSTER	10A	Instrument Cluster
MODULE 3	3 MODULE	10A	BCM (Body Control Module), Dual clutch transmission Shift Lever, Driver/Passenger Door Module, Stop Lamp Switch
MEMORY 2	2 MEMORY	7.5A	Active Air Flap Unit, VESS
MODULE 8	8 MODULE	10A	Electric Water Pump (Engine), Active Air Flap Unit, Engine Room Junction Block (Bat-tery COOLING FAN Relay), BMS Control Module
A/BAG IND	IND	7.5A	Air Conditioner Control Module, Instrument Cluster
START		7.5A	[With Smart Key / With Immobilizer] Inhibitor Switch

Fuse Name	Symbol	Fuse rating	Circuit Protected
MODULE 2	2 MODULE	10A	Engine Room Junction Block (Power Outlet Relay), Wireless Charger, BCM (Body Control Module), AMP (Amplifier), Smart Key Control Module, USB Charger, Audio, Audio / Video & Navigation Head Unit, Driver Power Outside Mirror, BMS, KEYBOARD
PDM 3	3	7.5A	[Without Smart Key] Immobilizer Module [With Smart Key] Smart Key Control Module
MEMORY 1	1 MEMORY	10A	Instrument Cluster, Air Conditioner Control Module, Auto Light & Photo Sensor, Rain Sensor, BCM (Body Control Module), Driver Integrated memory system Module, Driver/Passenger Door Module, ECM
MULTI MEDIA	MULTI MEDIA	15A	Audio, Audio / Video & Navigation Head Unit
EWP	EWP	10A	Electric Water Pump (HEV)
MDPS	1	7.5A	MDPS (Motor Driven Power Steering) Unit
TAIL GATE		10A	Tail Gate Relay, ICM Relay Box (Fuel Lid Relay), Fuel Filler Switch
PDM 1	1	15A	Smart Key Control Module
MODULE 7	7 MODULE	7.5A	AC Inverter (220V), AC Inverter Module, Rear Seat Warmer Control Module, Front Seat Warmer Control Module/ Front Air Ventilation Seat Control Module
WIPER (REAR)		15A	Engine Room Junction Block (Rear Wiper Relay), RR Wiper MTR
HEATED STEERING		15A	BCM (Body Control Module)
SUNROOF	(SUV Type)	20A	Sunroof Motor
P/WINDOW RH	RH	25A	Power Window Right Handle side Relay, Driver/Passenger Safety Power Window Module

Fuse Name	Symbol	Fuse rat-ing	Circuit Protected
P/WINDOW LH	LH	25A	Power Window Left Handle side Relay, Driver/Passenger Safety Power Window Mod-ule
PDM 2	2	7.5A	[Without Smart Key] Immobilizer Module [With Smart Key] Smart Key Control Module, Start/Stop Button Switch
BRAKE SWITCH	BRAKE SWITCH	7.5A	Stop Lamp Switch, SMK UNIT
A/CON	A/C	7.5A	Air Conditioner Control Module, Engine Room Junction Block (PTC Heater #2 Relay, PTC Heater #1 Relay, Blower Relay), Electronic Air Conditioner Compressor
WASHER		15A	Multifunction Switch
S/HEATER (FRT)	FRT	25A	Front Seat Warmer Control Module, Front Air Ventilation Seat Control Module
BATTERY MAN-AGEMENT	BATTERY MANAGEMENT	10A	BMS (Battery Management System) Control Module
P/SEAT (DRV)	DRV	30A	[Without Integrated memory system] Driver Seat Manual Switch [With Integrated memory system] Driver Seat Manual Switch, Driver Integrated memory system Module
AMP	AMP	30A	AMP (Amplifier)
AMS	AMS	10A	NOT USED
MODULE 1	1 MODULE	10A	Data Link Connector, Hazard Switch/Key Interlock, Forward Collision-avoidance Assist (FCA) Module, Driver Smart Key Outside Handle, Passenger Smart Key Outside Han-dle, Outside Mirror Folding/ Unfolding Relay, Mood Lamp, Outside Mirror Switch
DOOR LOCK		20A	Door Lock/Unlock Relay, ICM Relay Box (Dead Lock Relay)
WIPER2 (FRT)	FRT2	10A	BCM (Body Control Module), ECM (Engine Control Module), Wiper MTR

Fuse Name	Symbol	Fuse rat-ing	Circuit Protected
MODULE 6	6 MODULE	7.5A	BCM (Body Control Module), Smart Key Control Module
S/HEATER (REAR)	RR	25A	Rear Seat Warmer Control Module
HEATED MIR-ROR		10A	Air Conditioner Control Module, Driver/Passenger Power Outside Mirror
P/SEAT PASS	PASS	25A	Passenger Seat Manual Switch
WIPER1 (FRT)	FRT1	30A	Wiper Motor, Engine Room Junction Block (Front Wiper (Low) Relay)

Instrument panel (Driver's side fuse panel) (Plug-in Hybrid)

Fuse Name	Symbol	Fuse rat-ing	Circuit Protected
MODULE 5	5 MODULE	10A	Crash Pad Switch, Electro Chromic Mirror, Audio / Video &Navigation Head Unit, Audio, Air Conditioner Control Module, Head Lamp Leveling Device Actuator LH/RH, Driver IMS Module, Front Seat Warmer Control Module, Rear Seat Warmer Control Module, Front Air Ventilation Seat Control Module, AMP, Instrument Cluster, KEYBOARD, OBD
MODULE 4	4 MODULE	10A	Lane Keeping Assist Control Module, Crash Pad Switch, Forward Collision-avoidance Assist (FCA) Module, Blind-spot Collision Warning (BCW) Radar Left Handle side/Right Handle side, EPB, VESS
INTERIOR LAMP		10A	Luggage Lamp, Door Warning Switch, Front Vanity Lamp LH/RH, Room Lamp, Over-head Console Lamp, Rain Sensor, Mood Lamp, Wireless Charger
A/BAG		15A	ACU

Fuse Name	Symbol	Fuse rating	Circuit Protected
IG 1	IG 1	25A	Engine Room Junction Block (Fuse - HPCU2, ACTIVE HYDRAULIC BOOSTER 3, DCT4)
CLUSTER	CLUSTER	10A	Instrument Cluster
MODULE 3	3 MODULE	10A	BCM (Body Control Module), Dual clutch transmission Shift Lever, Driver/Passenger Door Module, Stop Lamp Switch
IG3 2	2 IG3	10A	Fuel Filler Door & Battery Charge Switch, Instrument Cluster, Charger Indicator, Integrated Gateway Power control Module, Audio/Video & Navigation Head Unit, Audio
MEMORY 2	2 MEMORY	7.5A	Active Air Flap Unit, VESS
MODULE 8	8 MODULE	10A	Electric Water Pump (Engine), Active Air Flap Unit
A/BAG IND	IND	7.5A	Air Conditioner Control Module, Instrument Cluster
START		7.5A	Inhibitor Switch
MODULE 2	2 MODULE	10A	Engine Room Junction Block (Power Outlet Relay), Wireless Charger, BCM (Body Control Module), AMP (Amplifier), Smart Key Control Module, USB Charger, Audio, Audio / Video & Navigation Head Unit, Power Outside Mirror Switch, KEYBOARD
BUTTON START3	3	7.5A	Immobilizer Module, Smart Key Control Module
MEMORY 1	1 MEMORY	10A	Instrument Cluster, Air Conditioner Control Module, Auto Light & Photo Sensor, BCM (Body Control Module), Driver Integrated memory system Module, Driver/Passenger Door Module, ECM
MULTI MEDIA	MULTI MEDIA	15A	Audio, Audio / Video & Navigation Head Unit, KEYBOARD
IG3 4	4 IG3	10A	OBC (On-Board Charger) UNIT, TCM (Transmission Control Module), ECM (Engine Control Module), HPCU (Hybrid Power Control Unit)
IG3 3	3 IG3	10A	Electric Water Pump (PHEV)

Fuse Name	Symbol	Fuse rat-ing	Circuit Protected
IG3 5	5 IG3	15A	Inhibitor Switch, BMS (Battery Management System) Control Module, Engine Room Junction Block (BATTERY COOLING FAN Relay)
IG3 1	1 IG3	20A	ICM Relay Box (IG3 #1, IG3 #2, IG3 #3 Relay)
MDPS 1	1	7.5A	MDPS (Motor Driven Power Steering) Unit
TAIL GATE		10A	Tail Gate Relay, ICM Relay Box (Fuel Filler Door Relay, Charger Connector Lock/Unlock Relay), Fuel Filler & Battery Charger Switch, Charge Connector Lamp
BUTTON START1	1	15A	Smart Key Control Module
MODULE 7	7 MODULE	7.5A	AC Inverter (220V), AC Inverter Module, Rear Seat Warmer Control Module, Front Seat Warmer Control Module/ Front Air Ventilation Seat Control Module
WIPER (REAR)		15A	Engine Room Junction Block (Rear Wiper Relay), Rear Wiper Motor
HEATED STEERING		15A	BCM (Body Control Module)
SUNROOF	(SUV Type)	20A	Sunroof Motor
P/WINDOW RH	RH	25A	Power Window Right Handle side Relay, Power Window Main Switch, Passenger Power Window Switch (LHD), Rear Power Window Switch Right Handle side, Driver Safety Power Window Module (RHD), Passenger Safety Power Window Module (LHD)
P/WINDOW LH	LH	25A	Power Window Left Handle side Relay, Power Window Main Switch, Passenger Power Window Switch (RHD), Rear Power Window Switch Left Handle side, Driver Safety Power Window Module (LHD), Passenger Safety Power Window Module (RHD)
BUTTON START 2	2	7.5A	Immobilizer Module, Smart Key Control Module, Start/Stop Button Switch
BRAKE SWITCH	BRAKE SWITCH	7.5A	Stop Lamp Switch, Smart Key Control Module

Fuse Name	Symbol	Fuse rat-ing	Circuit Protected
OBC	OBC	10A	OBC (On-Board Charger) Unit
A/CON	A/C	7.5A	Air Conditioner Control Module, Engine Room Junction Block (PTC Heater #2 Relay, PTC Heater #1 Relay, Blower Relay), Electronic Air Conditioner Compressor
WASHER		15A	Multifunction Switch
S/HEATER (FRT)	FRT	25A	Front Seat Warmer Control Module, Front Air Ventilation Seat Control Module
BATTERY MAN-AGEMENT	BATTERY MANAGEMENT	10A	BMS (Battery Management System) Control Module
P/SEAT (DRV)	DRV	30A	Driver Seat Manual Switch, Driver Integrated memory system Module
AMP	AMP	30A	AMP (Amplifier)
AMS	AMS	10A	Battery Sensor
MODULE 1	1 MODULE	10A	Data Link Connector, Hazard Switch, Forward Collision-avoidance Assist (FCA) Module, Driver Smart Key Outside Handle, Passenger Smart Key Outside Handle, Outside Mir-ror Folding/ Unfolding Relay, Mood Lamp, Outside Mirror Switch
DOOR LOCK		20A	Door Lock/Unlock Relay, ICM Relay Box (Dead Lock Relay)
WIPER2 (FRT)	FRT2	10A	BCM (Body Control Module), ECM (Engine Control Module), Wiper Motor, Engine Room Junction Block (Front Wiper (Low) Relay)
MODULE 6	6 MODULE	7.5A	BCM (Body Control Module), Smart Key Control Module
S/HEATER (REAR)	RR	25A	Rear Seat Warmer Control Module
HEATED MIR-ROR		10A	Air Conditioner Control Module, Driver/Passenger Power Outside Mirror

Fuse Name	Symbol	Fuse rat-ing	Circuit Protected
P/SEAT PASS	PASS	25A	Passenger Seat Manual Switch
WIPER1 (FRT)	FRT1	30A	Wiper Motor, Engine Room Junction Block (Front Wiper (Low) Relay)

Engine compartment fuse panel

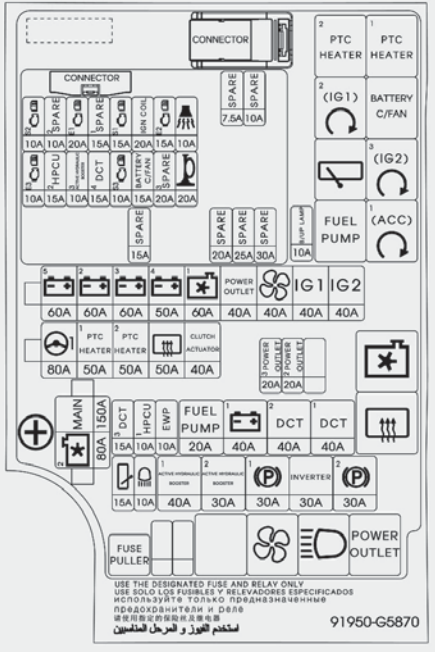

ODEP079112L

Battery terminal cover (Plug-in Hybrid)

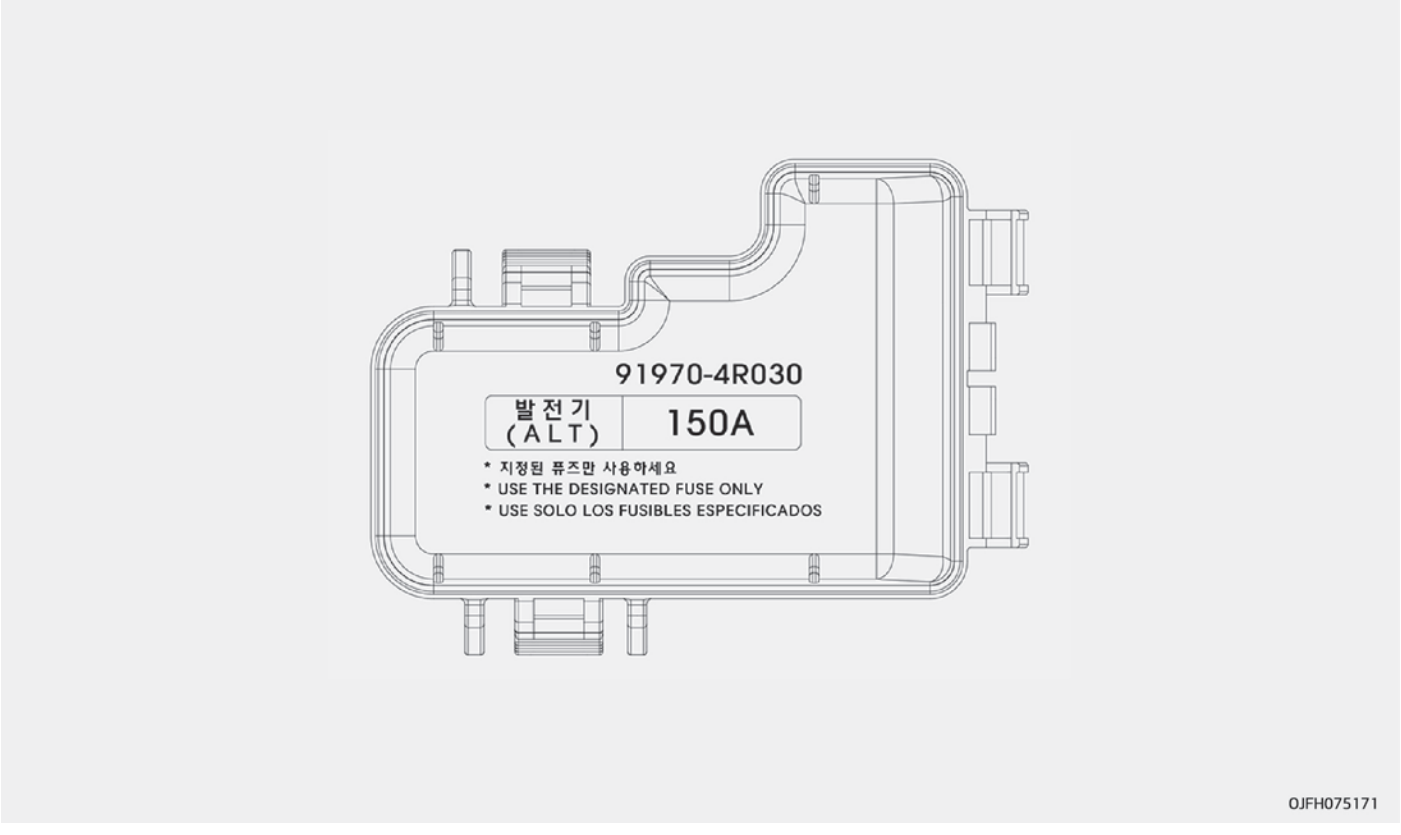

Engine room compartment fuse panel (Hybrid)

Fuse Name		Symbol	Fuse Rating	Circuit Protected
MULTI FUSE	B+ 5	5	60A	Fuse - BATTERY C/FAN, HORN, ECU2, B/ALARM HORN, Engine Control Relay
	B+ 2	2	60A	Instrument Panel Junction Block (Fuse - S/HEATER (REAR))
	B+ 3	3	60A	Instrument Panel Junction Block
	B+ 4	4	50A	Instrument Panel Junction Block (Fuse - TAIL GATE, SUN-ROOF, P/WINDOW RH, P/WINDOW LH, S/HEATER (FRT), BATTERY MANAGEMENT, P/SEAT (DRV), AMP, AMS)
	COOLING FAN 1	1	60A	Cooling Fan Relay
	POWER OUTLET	POWER OUTLET	40A	Power Outlet Relay
	BLOWER		40A	Blower Relay
	IG 1	IG 1	40A	Ignition Switch, Button Start #2 (IG1) Relay, Button Start #1 (ACC) Relay
	IG 2	IG 2	40A	Ignition Switch, Button Start #3 (IG2) Relay
	MDPS	1	80A	MDPS (Motor Driven Power Steering) Unit
	PTC HEATER 1	1 PTC HEATER	50A	PTC Heater #1 Relay
	PTC HEATER 2	2 PTC HEATER	50A	PTC Heater #2 Relay
	REAR HEATED		50A	Rear Defogger Relay
	CLUTCH ACTUATOR	CLUTCH ACTUATOR	40A	Clutch Actuator (HEV)
	MAIN	MAIN	150A	Fuse - REAR WIPER, H/LAMP HI, AHB1, AHB2, INVERTER, EPB1, EPB2

Fuse Name		Symbol	Fuse Rating	Circuit Protected
MULTI FUSE	COOLING FAN 2	2	80A	BLDC (Brushless Direct Current) Cooling Fan
FUSE	POWER OUTLET 3	3 POWER OUTLET	20A	Power Outlet #2
	POWER OUTLET 2	2 POWER OUTLET	20A	Power Outlet #1
	DCT 3	3 DCT	15A	TCM (Transmission Control Module)
	HPCU 1	1 HPCU	10A	HPCU (Hybrid Power Control Unit)
	EWP	EWP	10A	Electric Water Pump (Engine)
	FUEL PUMP	FUEL PUMP	20A	Fuel Pump Relay
	B+ 1	1	40A	Instrument Panel Junction Block (Fuse -PDM1, PDM2, BRAKE SWITCH, MODULE1, DOOR LOCK, Leak Current Autocut Device)
	DCT 2	2 DCT	40A	TCM (Transmission Control Module)
	DCT 1	1 DCT	40A	TCM (Transmission Control Module)
	REAR WIPER		15A	Rear Wiper Relay
	HEAD LAMP HI		10A	H/LAMP HI Relay
	ACTIVE HYDRAULIC BOOSTER 1	1 ACTIVE HYDRAULIC BOOSTER	40A	Integrated Brake Actuation Unit, Multipurpose Check Connector
	ACTIVE HYDRAULIC BOOSTER 2	2 ACTIVE HYDRAULIC BOOSTER	30A	Integrated Brake Actuation Unit
	EPB 1	1 (P)	30A	Electric Parking Brake Module

Fuse Name		Symbol	Fuse Rating	Circuit Protected
FUSE	INVERTER	INVERTER	30A	AC Inverter Module
	EPB 2	2 (P)	30A	Electric Parking Brake Module
	B/UP LAMP	B/UP LAMP	10A	Electro Chromic Mirror, Back-Up Lamp Left Handle side/ Right Handle side
	ECU 3	E3	10A	ECM (Engine Control Module)
	HPCU 2	2 HPCU	15A	HPCU (Hybrid Power Control Unit), Clutch Actuator (HEV)
	ACTIVE HYDRAULIC BOOSTER 3	3 ACTIVE HYDRAULIC BOOSTER	10A	Integrated Brake Actuation Unit, Multipurpose Check Connector
	DCT 4	4 DCT	15A	Dual clutch transmission Shift Lever, TCM (Transmission Control Module), Inhibitor Switch
	SENSOR 3	S3	10A	Fuel Pump Relay, Oil Control Valve #1/#2 (Intake/ Exhaust), Camshaft Position Sensor #1/#2 (Intake/ Exhaust)
	BATTERY C/FAN	BATTERY C/FAN	15A	Battery COOLING FAN Relay
	HORN		20A	Horn Relay
	SENSOR 2	S2	10A	Purge Control Solenoid Valve, Cooling Fan Relay, Mass Air Flow Sensor
	ECU 1	E1	20A	ECM (Engine Control Module)
	SENSOR 1	S1	15A	Oxygen Sensor (UP/DOWN)
	IGN COIL	IGN COIL	20A	Ignition Coil #1~#4
	ECU 2	E2	15A	ECM (Engine Control Module)
	B/ALARM HORN		10A	Burglar Alarm Horn Relay

Engine room compartment fuse panel (Plug-in Hybrid)

Fuse Name		Symbol	Fuse Rating	Circuit Protected
MULTI FUSE	B+ 5	5	60A	Fuse - BATTERY C/FAN, HORN, ECU2, B/ALARM HORN, Engine Control Relay
	B+ 2	2	60A	Instrument Panel Junction Block (Fuse - S/HEATER (REAR))
	B+ 3	3	60A	Instrument Panel Junction Block
	B+ 4	4	50A	Instrument Panel Junction Block (Fuse - TAIL GATE, SUN-ROOF, P/WINDOW RH, P/WINDOW LH, S/HEATER (FRT), BATTERY MANAGEMENT, P/SEAT (DRV), AMP, AMS)
	COOLING FAN 1	1	60A	Cooling Fan Relay
	POWER OUTLET	POWER OUTLET	40A	Power Outlet Relay
	BLOWER		40A	Blower Relay
	IG 1	IG 1	40A	Ignition Switch, Button Start #2 (IG1) Relay, Button Start #1 (ACC) Relay
	IG 2	IG 2	40A	Ignition Switch, Button Start #3 (IG2) Relay

Fuse Name		Symbol	Fuse Rating	Circuit Protected
MULTI FUSE	MDPS	1	80A	MDPS (Motor Driven Power Steering) Unit
	PTC HEATER 1	1 PTC HEATER	50A	PTC Heater #1 Relay
	PTC HEATER 2	2 PTC HEATER	50A	PTC Heater #2 Relay
	REAR HEATED		50A	Rear Defogger Relay
	CLUTCH ACTUATOR	CLUTCH ACTUATOR	40A	Clutch Actuator (HEV)
	MAIN	MAIN	150A	Fuse - REAR WIPER, H/LAMP HI, AHB1, AHB2, INVERTER, EPB1, EPB2
	COOLING FAN 2	2	80A	BLDC (Brushless Direct Current) Cooling Fan

Fuse Name		Symbol	Fuse Rating	Circuit Protected
FUSE	POWER OUTLET 3	3 POWER OUTLET	20A	Power Outlet #2
	POWER OUTLET 2	2 POWER OUTLET	20A	Power Outlet #1
	DCT 3	3 DCT	15A	TCM (Transmission Control Module)
	HPCU 1	1 HPCU	10A	HPCU (Hybrid Power Control Unit)
	EWP	EWP	10A	Electric Water Pump (Engine)
	FUEL PUMP	FUEL PUMP	20A	Fuel Pump Relay
	B+ 1	1	40A	Instrument Panel Junction Block (Fuse -BUTTON START1, BUTTON START2, BRAKE SWITCH, MODULE1, DOOR LOCK, Leak Current Autocut Device)
	DCT 2	2 DCT	40A	TCM (Transmission Control Module)
	DCT 1	1 DCT	40A	TCM (Transmission Control Module)
	REAR WIPER		15A	Rear Wiper Relay
	HEAD LAMP HI		10A	H/LAMP HI Relay
	ACTIVE HYDRAULIC BOOSTER 1	1 ACTIVE HYDRAULIC BOOSTER	40A	Integrated Brake Actuation Unit, Multipurpose Check Connector
	ACTIVE HYDRAULIC BOOSTER 2	2 ACTIVE HYDRAULIC BOOSTER	30A	Integrated Brake Actuation Unit
	EPB 1	1 (P)	30A	Electric Parking Brake Module

Fuse Name		Symbol	Fuse Rating	Circuit Protected
FUSE	INVERTER	INVERTER	30A	AC Inverter Module
	EPB 2	2 (P)	30A	Electric Parking Brake Module
	B/UP LAMP	B/UP LAMP	10A	Electro Chromic Mirror, Back-Up Lamp Left Handle side/ Right Handle side
	ECU 3	E3	10A	Not used
	HPCU 2	2 HPCU	15A	HPCU (Hybrid Power Control Unit), Clutch Actuator (HEV)
	ACTIVE HYDRAULIC BOOSTER 3	3 ACTIVE HYDRAULIC BOOSTER	10A	Integrated Brake Actuation Unit, Multipurpose Check Connector
	DCT 4	4 DCT	15A	Dual clutch transmission Shift Lever
	SENSOR 3	S3	10A	Fuel Pump Relay, Oil Control Valve #1/#2 (Intake/ Exhaust), Camshaft Position Sensor #1/#2 (Intake/ Exhaust)
	BATTERY C/FAN	BATTERY C/FAN	15A	Battery COOLING FAN Relay
	HORN		20A	Horn Relay
	SENSOR 2	S2	10A	Purge Control Solenoid Valve, Cooling Fan Relay, Mass Air Flow Sensor
	ECU 1	E1	20A	ECM (Engine Control Module)
	SENSOR 1	S1	15A	Oxygen Sensor (UP/DOWN)
	IGN COIL	IGN COIL	20A	Ignition Coil #1~#4
	ECU 2	E2	15A	ECM (Engine Control Module)
	B/ALARM HORN		10A	Burglar Alarm Horn Relay

Relay (Hybrid)

Symbol	Relay Name	Type
2 PTC HEATER	PTC Heater #2 Relay	MICRO
1 PTC HEATER	PTC Heater #1 Relay	MICRO
2 (IG1)	Button Start #2 (IG1) Relay	MICRO
BATTERY C/FAN	Battery C/FAN Relay	MICRO
	Rear Wiper Relay	MICRO
3 (IG2)	Button Start #3 (IG2) Relay	MICRO
FUEL PUMP	Fuel Pump Relay	MICRO
1 (ACC)	Button Start #1 (ACC) Relay	MICRO
	Cooling Fan Relay	MINI
	Rear Defogger Relay	MINI
	Blower Relay	MICRO
	HEAD LAMP HI Relay	MICRO
POWER OUTLET	Power Outlet Relay	MICRO

Relay (Plug-in Hybrid)

Symbol	Relay Name	Type
2 PTC HEATER	PTC Heater #2 Relay	MICRO
1 PTC HEATER	PTC Heater #1 Relay	MICRO
2 (IG1)	Button Start #2 (IG1) Relay	MICRO
BATTERY C/FAN	Battery C/FAN Relay	MICRO
	Rear Wiper Relay	MICRO
3 (IG2)	Button Start #3 (IG2) Relay	MICRO
FUEL PUMP	Fuel Pump Relay	MICRO
1 (ACC)	Button Start #1 (ACC) Relay	MICRO
	Cooling Fan Relay	MINI
	Rear Defogger Relay	MINI
	Blower Relay	MICRO
	HEAD LAMP HI Relay	MICRO
POWER OUTLET	Power Outlet Relay	MICRO

LIGHT BULBS

Bulb replacement precaution

Please prepare bulbs with appropriate standards in case of emergencies. Refer to "Bulb Wattage" on page 9-07.
When changing bulbs and sorts, first turn off the engine at a safe place, firmly apply the side brake and take out the battery's negative (-) terminal.

⚠ WARNING

■ Working on the lights

Prior to working on the light, firmly apply the parking brake, ensure that the ignition switch is turned to the LOCK position and turn off the lights to avoid sudden movement of the vehicle and burning your fingers or receiving an electric shock.

Use only the bulbs of the specified wattage.

⚠ WARNING

Be sure to replace the burned-out bulb with one of the same wattage rating. Otherwise, it may cause extensive wiring damage and possible fire.

⚠ CAUTION

If you don't have necessary tools, the correct bulbs and the expertise, consult a professional workshop. Kia recommends to consult an authorized Kia dealer/service partner. In many cases, it is difficult to replace vehicle light bulbs because other parts of the vehicle must be removed before you can get to the bulb. This is especially true if you have to remove the headlight assembly to get to the bulb(s). Removing/ installing the headlight assembly can result in damage to the vehicle.

⚠ CAUTION

- **If unauthentic parts or substandard lights are used when changing lights, it may lead to fuse disconnection and malfunction, and other wiring damages.**
- **Do not install extra lamps or LED to the vehicle. If supplementary lights are installed, it may lead to lamp malfunction and flickering of the lights. In addition, the fuse box and other writing may be damaged.**

· Lamp part malfunction due to network failure
The headlamp, taillight, and fog light may lit up when the head lamp switch is turned ON, and not light up when the taillight or for light switch is turned ON. This may be cause by network failure or vehicle electrical control system malfunction. If there is a problem, have the system serviced by a professional workshop. Kia recommends to visit an authorized Kia dealer/service partner.

- **Lamp part malfunction due to electrical control system stabilization**
  A normally functioning lamp may flicker momentarily. This momentary occurrence is due to stabilization unction of the vehicle's electrical on control system. If the lamp soon returns to normal, the vehicle does not require service.
  However, if the lamp goes out after the momentary flickering, or the flickering continues, have the system serviced by a professional workshop. Kia recommends to visit an authorized Kia dealer/service partner.

✻ NOTICE

- If the light bulb or lamp connector is removed from an operating lamp activated by electricity, the fuse box's electronic device may scan it as a malfunction. Therefore, a lamp malfunction history may be recorded in Diagnostic Trouble Code (DTC) in the fuse box.

(Continued)

(Continued)

- It is normal for an operating lamp may blink temporarily. Since this occurrence is due stabilization function of the vehicle's electronic control device, if the lamp lights up normally after temporary blinking, there is no problem in the vehicle. However, if the lamp continues to blink several times or turn off completely, there may be an error in the vehicle's electronic control device. In this case, have the vehicle checked by a professional workshop immediately. Kia recommends to visit an authorized Kia dealer/service partner.

✻ NOTICE

After an accident or after the headlight assembly is reinstalled, have the headlight aiming adjusted by a professional workshop. Kia recom-

(Continued)

(Continued)

mends to visit an authorized Kia dealer/service partner.

✻ NOTICE

You can find moisture inside the lens of lamps after a car wash or driving in the rain. It is a natural event caused by the temperature difference between the inside and the outside of the lamp and does not mean a problem with its functions. The moisture inside the lamp would disappear if you drive the vehicle with the headlamp turned on, however, the level at which the moisture is removed may differ depending on the size / location / condition of the lamp. If the moisture continues to stay inside the lamp, Kia recommends visiting an authorized Kia dealer/service partner.

Light bulb position (Front)

■ Head lamp - Type A

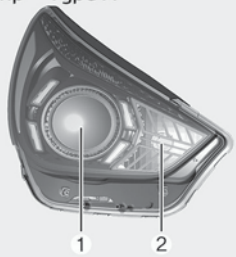

ODEP079099

■ Head lamp - Type B

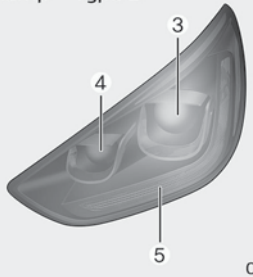

ODEP079029

■ Daytime running lamp & Position lamp

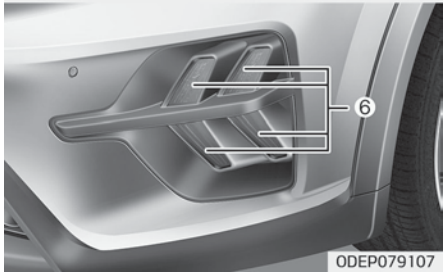

ODEP079107

■ Fog lamp

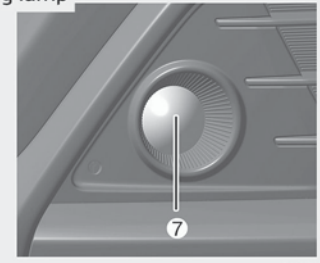

ODEP079100

1. Headlamp (Low/High) (Bulb type)
2. Front turn signal lamp (Bulb type)
3. Headlamp (Low/High) (LED type)
4. Headlamp (Low) (LED type)
5. Front turn signal lamp (LED type)
6. Day time running lamp / Position lamp (LED type)
7. Front fog lamp (Bulb/LED type)

Light bulb position (Rear)

■ Rear combination lamp - Type A

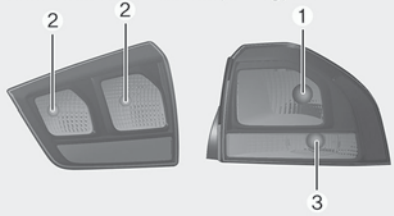

ODE076031

■ Rear combination lamp - Type B

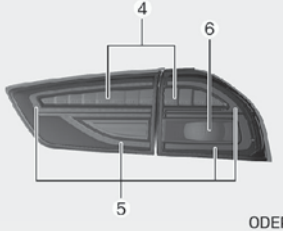

ODEP079102

■ Rear fog lamp

■ Back-up lamp

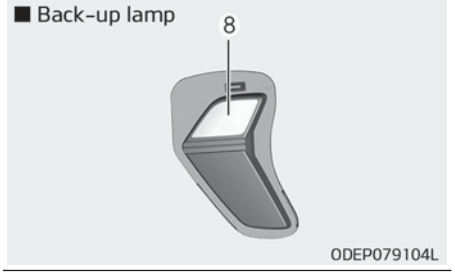

■ License plate lamp

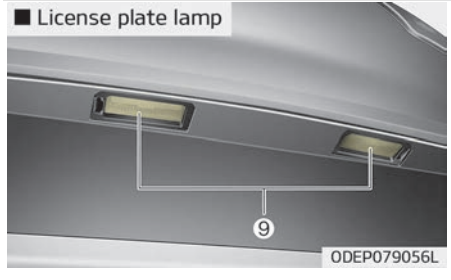

■ High mounted stop lamp

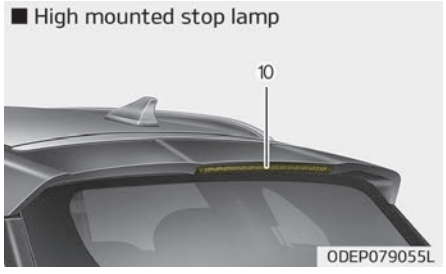

1. Stop and tail lamp (Bulb type)
2. Tail lamp (Bulb type)
3. Rear turn signal lamp (Bulb type)
4. Stop lamp (LED type)
5. Tail lamp (LED type)
6. Rear turn signal lamp (Bulb type)
7. Rear fog lamp (LED type)
8. Back-up lamp (Bulb type)
9. License plate lamp (Bulb type)
10. High mounted stop lamp (LED type)

Light bulb position (Side)

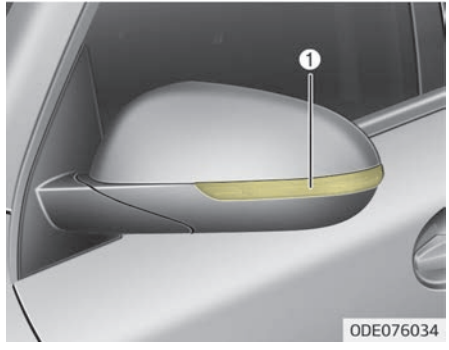

1. Side repeater lamp (LED type)

Headlamp (High/Low beam) (Bulb type) bulb replacement (Headlamp type A)

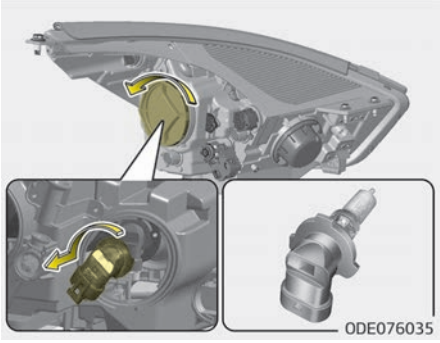

1. Open the hood.
2. Remove the headlamp bulb cover by turning it counterclockwise.
3. Disconnect the headlamp bulb socket-connector.
4. Remove the bulb-socket from the headlamp assembly by turning the bulb-socket counterclockwise until the tabs on the bulb-socket align with the slots on the headlamp assembly.
5. Install a new bulb-socket assembly in the headlamp assembly by aligning the tabs on the bulb-socket with the slots in the headlamp assembly. Push the bulb-socket into the headlamp assembly and turn the bulb-socket clockwise.
6. Install the headlamp bulb cover by turning it clockwise.

Headlamp bulb

⚠ WARNING

■ Halogen bulbs

- **Halogen bulbs contain pressurized gas that will produce flying pieces of glass if broken.**
- **Always handle them carefully, and avoid scratches and abrasions. If the bulbs are lit, avoid contact with liquids. Never touch the glass with bare hands. Residual oil may cause the bulb to overheat and burst when lit.**
  A bulb should be operated only when installed in a headlight.
- **If a bulb becomes damaged or cracked, replace it immediately and carefully dispose of it.**
- **Wear eye protection when changing a bulb. Allow the bulb to cool down before handling it.**

Front turn signal lamp (Bulb type) bulb replacement (Headlamp type A)

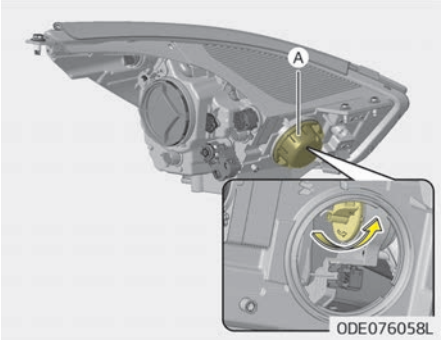

1. Open the hood.
2. Remove the dust cover (A) from the headlamp assembly then bulb-socket by turning the counterclockwise until the tabs on the bulb-socket align with the slots on the headlamp assembly.
3. Remove the bulb from the bulb-socket by pressing it in and rotating it counterclockwise until the tabs on the bulb align with the slots in the bulb-socket. Pull the bulb out of the bulb-socket.
4. Insert a new bulb by inserting it into the bulb-socket and rotating it until it locks into place.
5. Install the socket in the headlamp assembly by aligning the tabs on the bulb-socket with the slots in the assembly. Push the bulb-socket into the headlamp assembly and turn the socket clockwise.

Headlamp (High/Low beam) (LED type) bulb replacement (Headlamp type B)

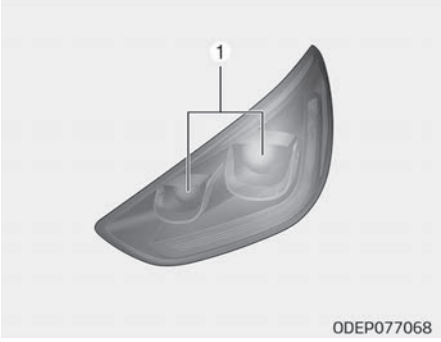

If the headlamp (LED type) (1) does not operate, have your vehicle checked by a professional workshop. Kia recommends to visit an authorized Kia dealer/service partner.
The LED lamp cannot be replaced as a single component because it is an integrated unit. The LED lamp has to be replaced with the unit.
A skilled technician should check or repair the headlamp (LED type), for it may damage related parts of the vehicle.

Front turn signal (LED type) bulb replacement (Headlamp type B)

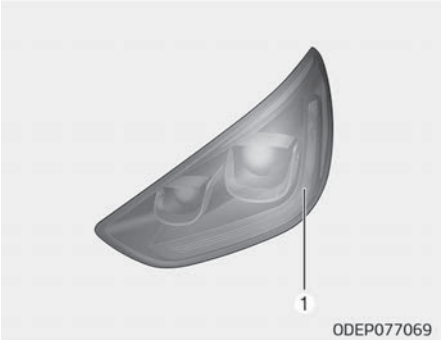

If the front turn signal lamp (LED type) (1) does not operate, have your vehicle checked by a professional workshop. Kia recommends to visit an authorized Kia dealer/service partner.
The LED lamp cannot be replaced as a single component because it is an integrated unit. The LED lamp has to be replaced with the unit.
A skilled technician should check or repair the front turn signal lamp (LED type), for it may damage related parts of the vehicle.

Daytime running lamp/Position lamp (LED type) bulb replacement

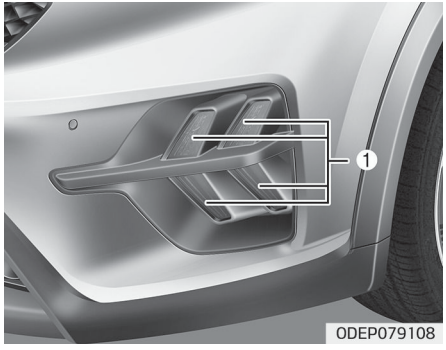

If the daytime running lamp/position lamp (LED type) (1) does not operate, have your vehicle checked by a professional workshop. Kia recommends to visit an authorized Kia dealer/service partner.
The LED lamp cannot be replaced as a single component because it is an integrated unit. The LED lamp has to be replaced with the unit.
A skilled technician should check or repair the daytime running lamp/position lamp (LED type), for it may damage related parts of the vehicle.

Front fog lamp (Bulb/LED type) bulb replacement

If the front fog lamp (Bulb/LED type) (1) does not operate, have your vehicle checked by a professional workshop. Kia recommends to visit an authorized Kia dealer/service partner.
The LED lamp cannot be replaced as a single component because it is an integrated unit. The LED lamp has to be replaced with the unit.

A skilled technician should check or repair the front fog lamp (Bulb/LED type), for it may damage related parts of the vehicle.

Stop and tail lamp, Rear turn signal lamp (Bulb type) bulb replacement

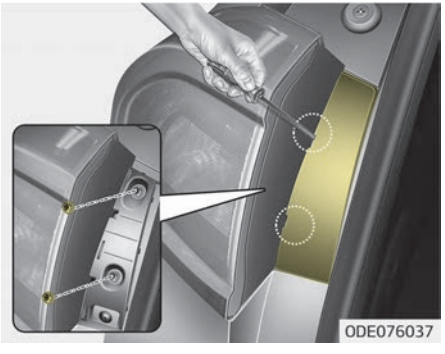

1. Open the tailgate.
2. Open the service cover.
3. Loosen the light assembly retaining screws with a cross-tip screwdriver.

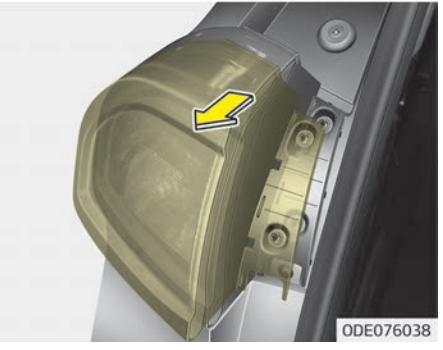

4. Remove the rear combination lamp assembly from the body of the vehicle.
5. Disconnect the rear combination lamp connector.

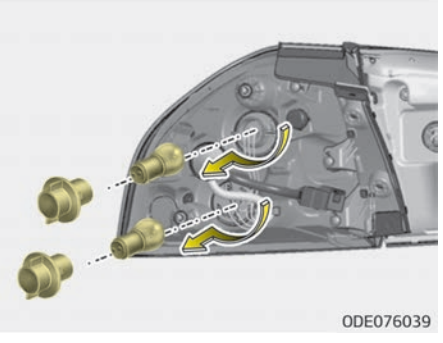

6. Remove the socket from the assembly by turning the socket counterclockwise until the tabs on the socket align with the slots on the assembly.
7. Remove the bulb from the socket by pressing it in and rotating it counterclockwise until the tabs on the bulb align with the slots in the socket. Pull the bulb out of the socket.
8. Insert a new bulb by inserting it into the socket and rotating it until it locks into place.
9. Install the socket in the assembly by aligning the tabs on the socket with the slots in the assembly. Push the socket into the assembly and turn the socket clockwise.
10. Install the rear combination lamp assembly to the body of the vehicle.
11. Install the service cover.

Tail lamp (inside) (Bulb type) bulb replacement

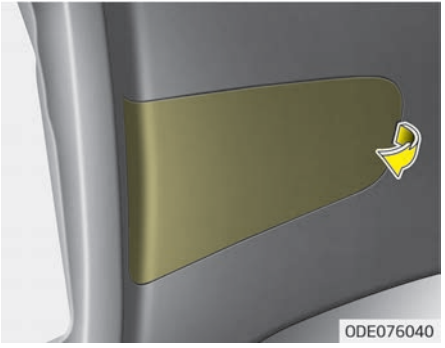

1. Open the tailgate.
2. Remove the service cover.

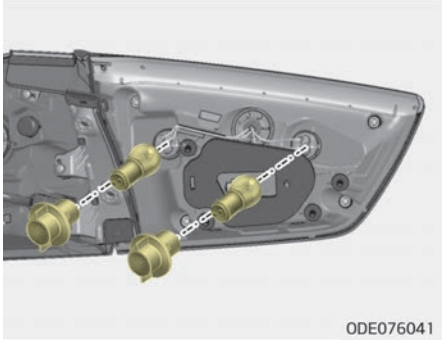

3. Remove the socket from the assembly by turning the socket counterclockwise until the tabs on the socket align with the slots on the assembly.
4. Remove the bulb from the socket by pressing it in and rotating it counter-clockwise until the tabs on the bulb align with the slots in the socket. Pull the bulb out of the socket.
5. Insert a new bulb by inserting it into the socket and rotating it until it locks into place.
6. Install the socket in the assembly by aligning the tabs on the socket with the slots in the assembly. Push the socket into the assembly and turn the socket clockwise.
7. Install the service cover by putting it into the service hole.

Stop and tail lamp (LED type) bulb replacement

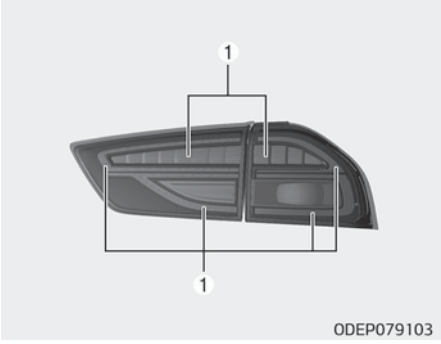

If the stop and tail lamp (LED type) (1) does not operate, have your vehicle checked by a professional workshop. Kia recommends to visit an authorized Kia dealer/service partner.

The LED lamp cannot be replaced as a single component because it is an integrated unit. The LED lamp has to be replaced with the unit.
A skilled technician should check or repair the stop and tail lamp (LED type), for it may damage related parts of the vehicle.

Rear fog lamp (LED type) bulb replacement

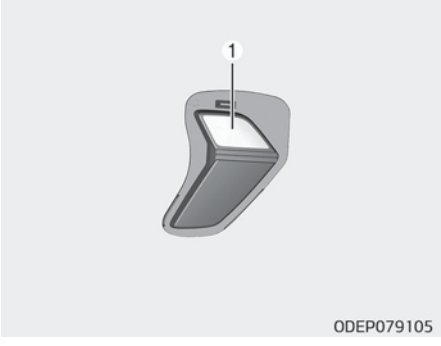

If the rear fog lamp (LED type) (1) does not operate, have your vehicle checked by a professional workshop. Kia recommends to visit an authorized Kia dealer/service partner.

The LED lamp cannot be replaced as a single component because it is an integrated unit. The LED lamp has to be replaced with the unit.
A skilled technician should check or repair the rear fog lamp (LED type), for it may damage related parts of the vehicle.

Back up lamp (Bulb type) bulb replacement

If the back-up lamp (Bulb type) (1) does not operate, have your vehicle checked by a professional workshop. Kia recommends to visit an authorized Kia dealer/service partner.

License plate lamp (Bulb type) bulb replacement

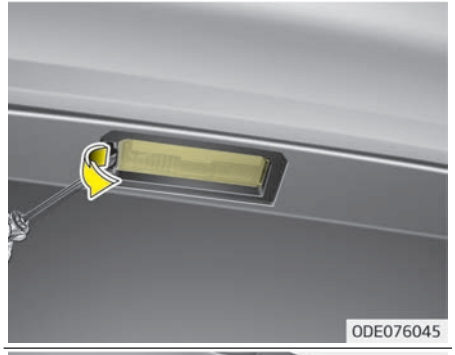

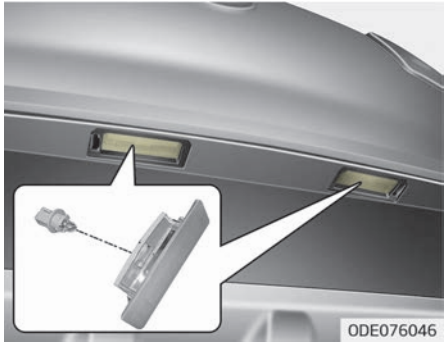

1. Using a flat-blade screwdriver, gently pry the lens cover from lamp housing.
2. Remove the socket from the assembly by turning the socket counterclockwise until the tabs on the socket align with the slots on the assembly.
3. Remove the bulb from bulb-socket by pulling it out.
4. Insert a new bulb by inserting it into the bulb-socket.
5. Install the socket in the assembly by aligning the tabs on the socket with the slots in the assembly. Push the socket into the assembly and turn the socket clockwise.
6. Align the lens cover tabs with the lamp housing notches and snap the lens into place.

High mounted stop lamp (LED type) bulb replacement

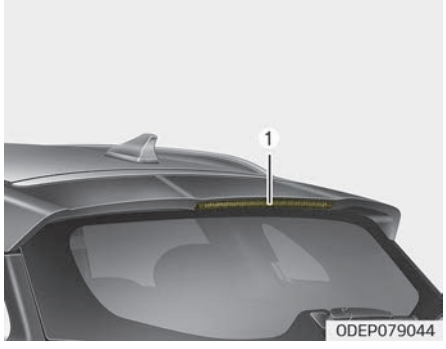

If the high mounted stop lamp (LED type) (1) does not operate, have your vehicle checked by a professional workshop. Kia recommends to visit an authorized Kia dealer/service partner.
The LED lamp cannot be replaced as a single component because it is an integrated unit. The LED lamp has to be replaced with the unit.
A skilled technician should check or repair the high mounted stop lamp (LED type), for it may damage related parts of the vehicle.

Side repeater lamp (LED type) bulb replacement

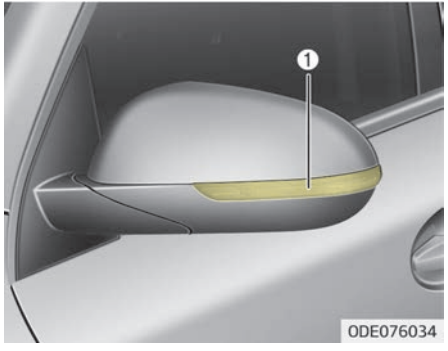

If the side repeater lamp (LED type) (1) does not operate, have your vehicle checked by a professional workshop. Kia recommends to visit an authorized Kia dealer/service partner.
The LED lamp cannot be replaced as a single component because it is an integrated unit. The LED lamp has to be replaced with the unit.
A skilled technician should check or repair the side repeater lamp (LED type), for it may damage related parts of the vehicle.

Map lamp (Bulb type) bulb replacement

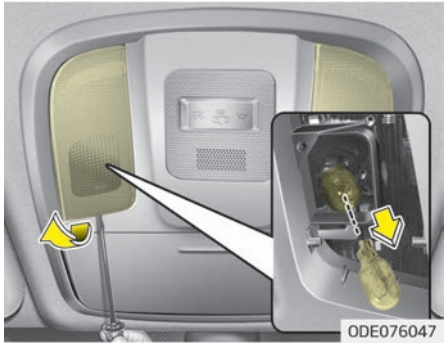

1. Using a flat-blade screwdriver, gently pry the lens cover from lamp housing.
2. Remove the bulb by pulling it straight out.
3. Install a new bulb in the socket.
4. Align the lens cover tabs with the lamp housing notches and snap the lens into place.

⚠ CAUTION

Be careful not to dirty or damage the lens, lens tab, and plastic housings.

Map lamp (LED type) bulb replacement

If the map lamp (LED type) (1) does not operate, have your vehicle checked by a professional workshop. Kia recommends to visit an authorized Kia dealer/service partner.

The LED lamp cannot be replaced as a single component because it is an integrated unit. The LED lamp has to be replaced with the unit.
A skilled technician should check or repair the map lamp (LED type), for it may damage related parts of the vehicle.

Vanity mirror lamp (Bulb type) bulb replacement

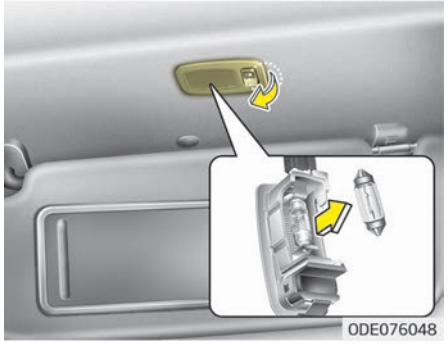

⚠ WARNING

Prior to working on the Interior lamps, ensure that the "OFF" button is depressed to avoid burning your fingers or receiving an electric shock.

1. Using a flat-blade screwdriver, gently pry the lamp assembly from interior.
2. Remove the bulb by pulling it straight out.
3. Install a new bulb in the socket.
4. Install the lamp assembly to interior.

⚠ CAUTION

Be careful not to dirty or damage the lens, lens tab, and plastic housings.

Room lamp (Bulb type) bulb replacement

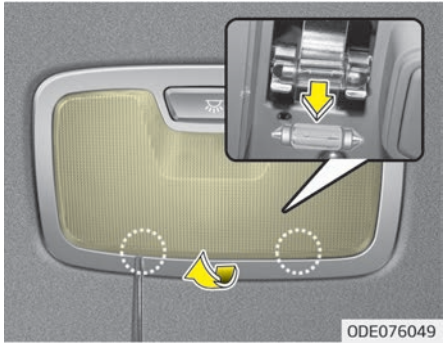

⚠ WARNING

Prior to working on the Interior lamps, ensure that the "OFF" button is depressed to avoid burning your fingers or receiving an electric shock.

1. Using a flat-blade screwdriver, gently pry the lens cover from lamp housing.
2. Remove the bulb by pulling it straight out.
3. Install a new bulb in the socket.
4. Align the lens cover tabs with the lamp housing notches and snap the lens into place.

⚠ CAUTION

Be careful not to dirty or damage the lens, lens tab, and plastic housings.

Room lamp (LED type) bulb replacement

If the room lamp (LED type) (1) does not operate, have your vehicle checked by a professional workshop. Kia recommends to visit an authorized Kia dealer/service partner.
The LED lamp cannot be replaced as a single component because it is an integrated unit. The LED lamp has to be replaced with the unit.
A skilled technician should check or repair the room lamp (LED type), for it may damage related parts of the vehicle.

Tailgate room lamp (Bulb type) bulb replacement

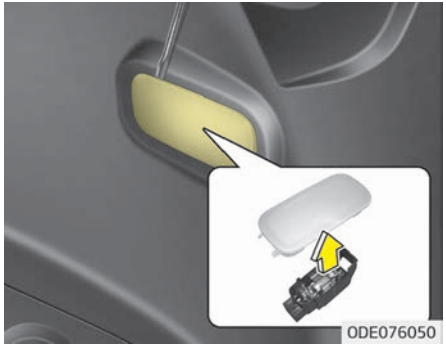

1. Using a flat-blade screwdriver, gently pry the lens cover from lamp housing.
2. Remove the bulb by pulling it straight out.
3. Install a new bulb in the socket.
4. Align the lens cover tabs with the lamp housing notches and snap the lens into place.

⚠ CAUTION

Be careful not to dirty or damage the lens, lens tab, and plastic housings.

Tailgate room lamp (LED type) bulb replacement

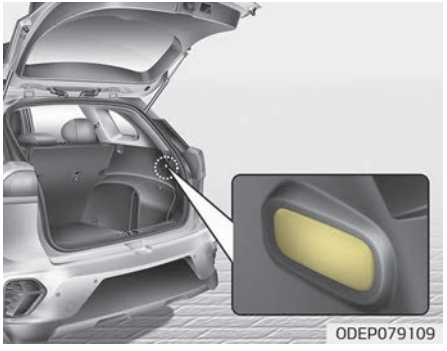

If the tailgate room lamp (LED type) (1) does not operate, have your vehicle checked by a professional workshop. Kia recommends to visit an authorized Kia dealer/service partner.

The LED lamp cannot be replaced as a single component because it is an integrated unit. The LED lamp has to be replaced with the unit.
A skilled technician should check or repair the tailgate room lamp (LED type), for it may damage related parts of the vehicle.

Headlamp and front fog lamp aiming (for Europe)

Headlamp aiming

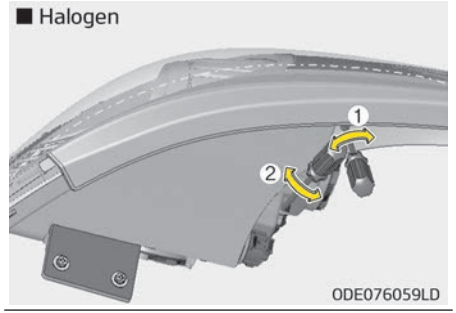

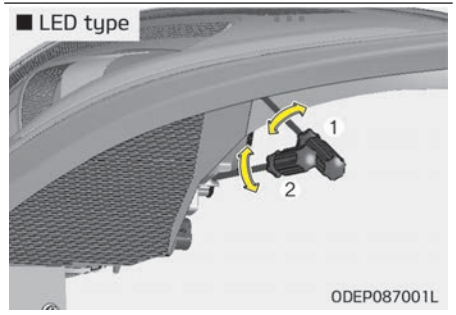

1. Inflate the tires to the specified pressure and remove any loads from the vehicle except the driver, spare tire, and tools.
2. The vehicle should be placed on a flat floor.
3. Draw vertical lines (Vertical lines passing through respective head lamp centers) and a horizontal line (Horizontal line passing through center of head lamps) on the screen.
4. With the head lamp and battery in normal condition, aim the head lamps so the brightest portion falls on the horizontal and vertical lines.
5. To aim the low and high beams left or right, turn the driver (1) clockwise or counterclockwise. To aim the low and high beams up or down, turn the driver (2) clockwise or counterclockwise.

Front fog lamp aiming

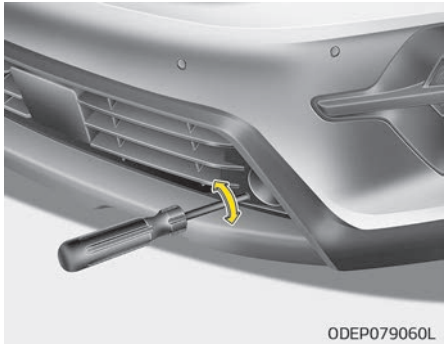

The front fog lamp can be aimed as the same manner of the head lamps aiming.
With the front fog lamps and battery normal condition, aim the front fog lamps.
To aim the front fog lamp up or down, turn the driver clockwise or counterclockwise.

Aiming point

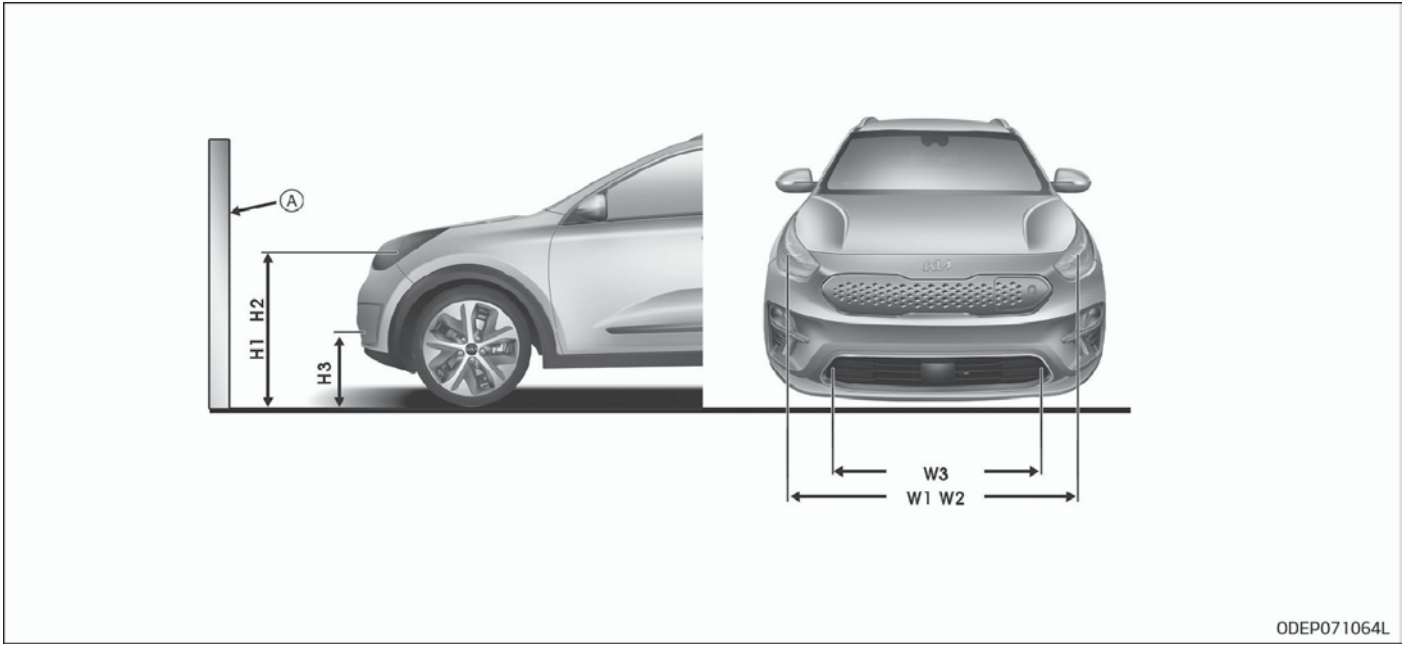

* A: Screen

Unit: mm (in)

Vehicle condition	Head lamp (Halogen type)				Head lamp (LED type)			
	Ground Height		Distance between lamps		Ground Height		Distance between lamps	
	Low beam	High beam	Low beam	High beam	Low beam	High beam	Low beam	High beam
	H1	H2	W1	W2	H1'	H2'	W1'	W2'
Without driver	814 (32.0)	814 (32.0)	1,411 (55.5)	1,411 (55.5)	824 (32.4)	824 (32.4)	1,384 (54.5)	1,384 (54.5)
With driver	809 (31.8)	809 (31.8)	1,411 (55.5)	1,411 (55.5)	819 (32.2)	819 (32.2)	1,384 (54.5)	1,384 (54.5)

Vehicle condition	Front Fog lamp (Bulb/LED Type)	
	Ground Height	Distance between lamps
	H3	W3
Without driver	329 (12.9)	960 (37.8)
With driver	324 (12.7)	960 (37.8)

Head lamp low beam (LHD)

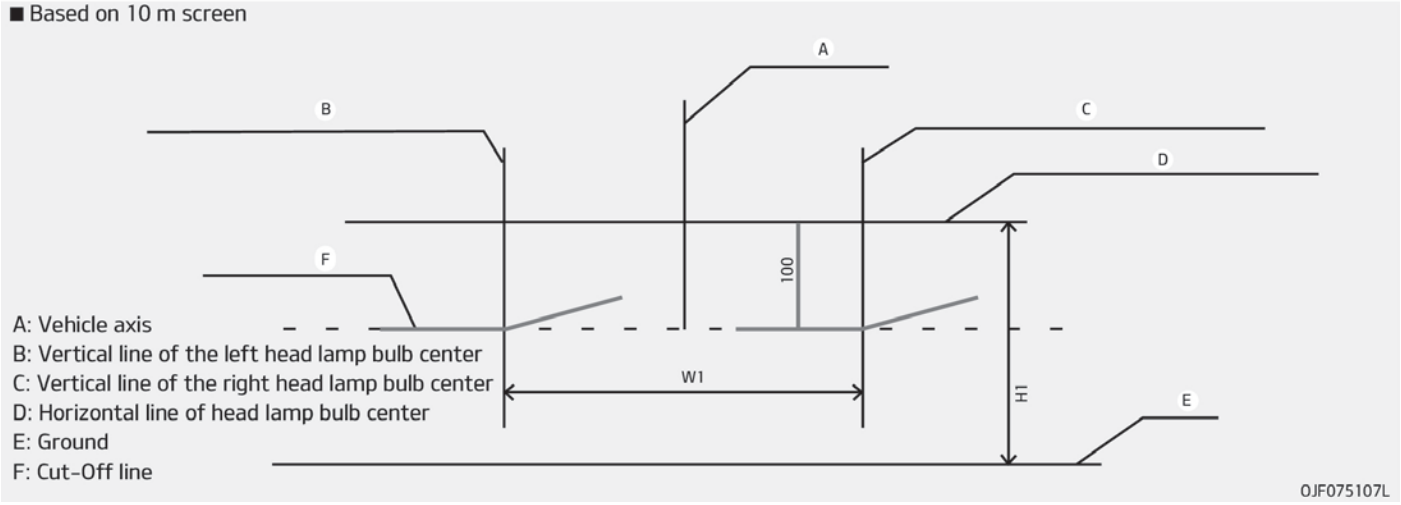

1. Turn the low beam on without driver aboard.
2. The cut-off line should be projected in the cut-off line shown in the picture.
3. When aiming the low beam, vertical aiming should be adjusted after adjusting the horizontal aiming.
4. If head lamp leveling device is equipped, adjust the head lamp leveling device switch with 0 positions.

Head lamp low beam (RHD)

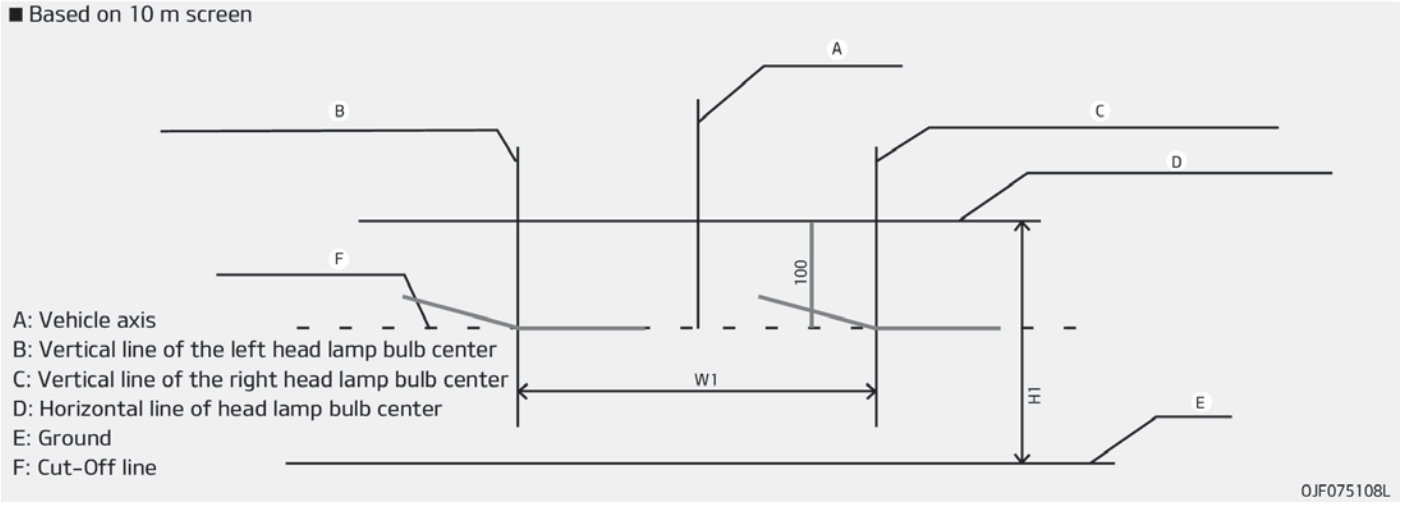

1. Turn the low beam on without driver aboard.
2. The cut-off line should be projected in the cut-off line shown in the picture.
3. When aiming the low beam, vertical aiming should be adjusted after adjusting the horizontal aiming.
4. If head lamp leveling device is equipped, adjust the head lamp leveling device switch with 0 positions.

Front fog light

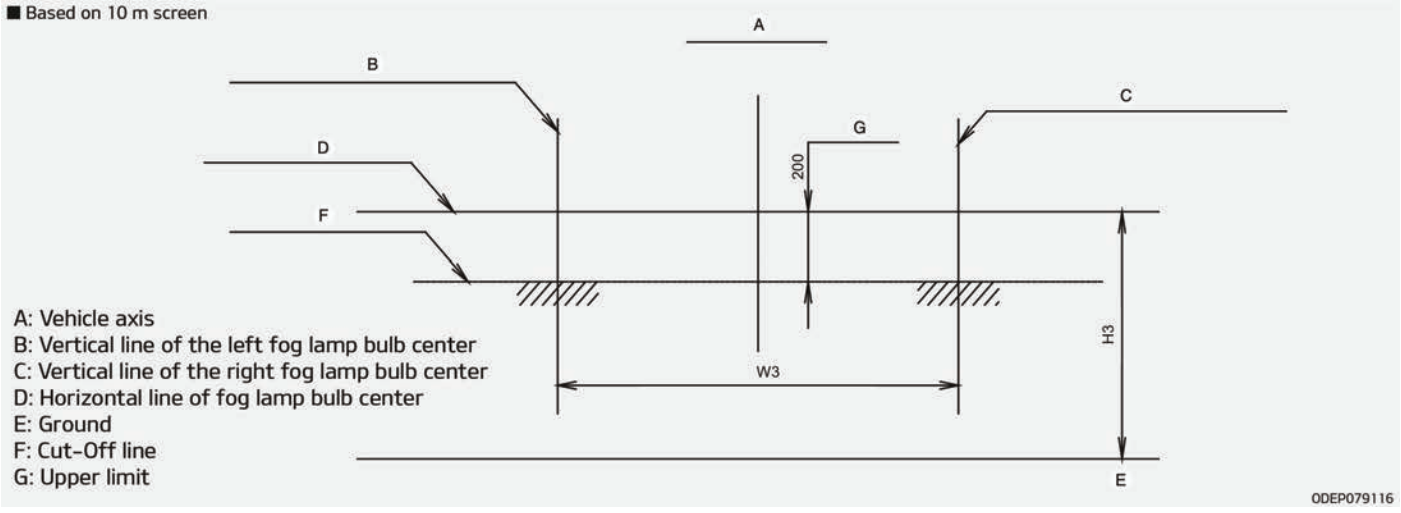

1. Turn the front fog lamp on without the driver aboard.
2. The cut-off line should be projected in the allowable range (shaded region).

APPEARANCE CARE

Exterior care

✻ NOTICE

If you park the vehicle around a stainless signboard or windshield building etc., the plastic exterior trim (bumper, spoiler, garnish, lamp, outside mirror etc.) may be damaged by reflected sunlight from the external structure. To avoid damaging the plastic exterior trim, park the vehicle away from the areas where the reflected light may occur or use a vehicle cover. (Depending on the vehicle, the type of exterior trim applied such as spoiler may differ.)

Exterior general caution

It is very important to follow the label directions when using any chemical cleaner or polish. Read all warning and caution statements that appear on the label.

Finish maintenance

Washing

To help protect your vehicle's finish from rust and deterioration, wash it thoroughly and frequently at least once a month with lukewarm or cold water.
If you use your vehicle for off-road driving, you should wash it after each off-road trip. Pay special attention to the removal of any accumulation of salt, dirt, mud, and other foreign materials. Make sure the drain holes in the lower edges of the doors and rocker panels are kept clear and clean.
Insects, tar, tree sap, bird droppings, industrial pollution and similar deposits can damage your vehicle's finish if not removed immediately.
Even prompt washing with plain water may not completely remove all these deposits. A mild soap, safe for use on painted surfaces, may be used.
After washing, rinse the vehicle thoroughly with lukewarm or cold water. Do not allow soap to dry on the finish.

⚠ CAUTION

- **Do not use strong soap, chemical detergents or hot water, and do not wash the vehicle in direct sunlight or when the body of the vehicle is warm.**
- **Be careful when washing the side windows of your vehicle. Especially, with high-pressure water, water may leak through the windows and wet the interior.**
- **To prevent damage to the plastic parts and lamps, do not clean with chemical solvents or strong detergents.**

⚠ WARNING

■ Wet brakes

After washing the vehicle, test the brakes while driving slowly to see if they have been affected by water. If braking performance is impaired, dry the brakes by applying them lightly while maintaining a slow forward speed.

High-pressure washing

- When using high-pressure washers, make sure to maintain sufficient distance from the vehicle.
  Insufficient clearance or excessive pressure can lead to component damage or water penetration.
- Do not spray the camera, sensors or its surrounding area directly with a high pressure washer. Shock applied from high pressure water may cause the device to not operate normally.
- Do not bring the nozzle tip close to boots (rubber or plastic covers) or connectors as they may be damaged if they come into contact with high pressure water.

⚠ CAUTION

- **Water washing in the engine compartment including high pressure water washing may cause the failure of electrical circuits located in the engine compartment.**
- **Never allow water or other liquids to come in contact with electrical/electronic components inside the vehicle as this may damage them.**
- **To prevent damage to the charging door, make sure to close and lock the vehicle doors when washing (high-pressure washing, automatic car washing, etc.) the vehicle.**

Waxing

Wax the vehicle when water will no longer bead on the paint.
Always wash and dry the vehicle before waxing. Use a good quality liquid or paste wax, and follow the manufacturer's instructions. Wax all metal trim to protect it and to maintain its luster.

Removing oil, tar, and similar materials with a spot remover will usually strip the wax from the finish. Be sure to re-wax these areas even if the rest of the vehicle does not yet need waxing. Do not apply wax on embossed unpainted unit, as it may tarnish the unit.

⚠ CAUTION

- **Wiping dust or dirt off the body with a dry cloth will scratch the finish.**
- **Do not use steel wool, abrasive cleaners, acid detergents or strong detergents containing high alkaline or caustic agents on chrome-plated or anodized aluminum parts. This may result in damage to the protective coating and cause discoloration or paint deterioration.**

Finish damage repair

Deep scratches or stone chips in the painted surface must be repaired promptly. Exposed metal will quickly rust and may develop into a major repair expense.

✻ NOTICE

If your vehicle is damaged and requires any metal repair or replacement, be sure the body shop applies anti-corrosion materials to the parts repaired or replaced.

Bright-metal maintenance

- To remove road tar and insects, use a tar remover, not a scraper or other sharp object.
- To protect the surfaces of bright-metal parts from corrosion, apply a coating of wax or chrome preservative and rub to a high luster.
- During winter weather or in coastal areas, cover the bright metal parts with a heavier coating of wax or preservative. If necessary, coat the parts with non-corrosive petroleum jelly or other protective compound.

Underbody maintenance

Corrosive materials used for ice and snow removal and dust control may collect on the underbody. If these materials are not removed, accelerated rusting can occur on underbody parts such as the fuel lines, frame, floor pan and exhaust system, even though they have been treated with rust protection. Thoroughly flush the vehicle underbody and wheel openings with lukewarm or cold water once a month, after off-road driving and at the end of each winter. Pay special attention to these areas because it is difficult to see all the mud and dirt. It will do more harm than good to wet down the road grime without removing it. The lower edges of the doors, rocker panels, and frame members have drain holes that should not clog with dirt; trapped water in these areas can cause rusting.

⚠ WARNING

After washing the vehicle, test the brakes while driving slowly to see if they have been affected by water. If braking performance is impaired, dry

(Continued)

(Continued)

the brakes by applying them lightly while maintaining a slow forward speed.

Aluminum wheel maintenance

The aluminum wheels are coated with a clear protective finish.

- Do not use any abrasive cleaner, polishing compound, solvent, or wire brushes on aluminum wheels. They may scratch or damage the finish.
- Clean the wheel when it has cooled.
- Use only a mild soap or neutral detergent, and rinse thoroughly with water. Also, be sure to clean the wheels after driving on salted roads. This helps prevent corrosion.
- Avoid washing the wheels with high-speed car wash brushes.
- Do not use any alkaline or acid detergent. It may damage and corrode the aluminum wheels coated with a clear protective finish.

Corrosion protection

Protecting your vehicle from corrosion

By using the most advanced design and construction practices to combat corrosion, we produce vehicles of the highest quality. However, this is only part of the job. To achieve the long-term corrosion resistance your vehicle can deliver, the owner's cooperation and assistance is also required.

Common causes of corrosion

The most common causes of corrosion on your vehicle are:

- Road salt, dirt and moisture that is allowed to accumulate underneath the vehicle.
- Removal of paint or protective coatings by stones, gravel, abrasion or minor scrapes and dents which leave unprotected metal exposed to corrosion.

High-corrosion areas

If you live in an area where your vehicle is regularly exposed to corrosive materials, corrosion protection is particularly important. Some of the common causes of accelerated corrosion are road salts, dust control chemicals, ocean air and industrial pollution.

Moisture breeds corrosion

Moisture creates the conditions in which corrosion is most likely to occur. For example, corrosion is accelerated by high humidity, particularly when temperatures are just above freezing. In such conditions, the corrosive material is kept in contact with the vehicle's surface by moisture that evaporate slowly.

Mud is particularly corrosive because it dries slowly and holds moisture in contact with the vehicle. Although the mud appears to be dry, it can still retain moisture and promote corrosion.

High temperatures can also accelerate corrosion of parts that are not properly ventilated so the moisture can be dispersed.

For all these reasons, it is particularly important to keep your vehicle clean and free of mud or accumulations of other materials. This applies not only to the visible surfaces but particularly to the underside of the vehicle.

To help prevent corrosion

You can help prevent corrosion from getting started by observing the following:

■Keep your vehicle clean

The best way to prevent corrosion is to keep your vehicle clean and free of corrosive materials. Attention to the underside of the vehicle is particularly important.

- If you live in a high-corrosion area — where road salts are used, near the ocean, areas with industrial pollution, acid rain, etc.—, you should take extra care to prevent corrosion. In winter, hose off the underside of your vehicle at least once a month and be sure to clean the underside thoroughly when winter is over.
- When cleaning underneath the vehicle, give particular attention to the components under the fenders and other areas that are hidden from view. Do a thorough job; just dampening the accumulated mud rather than washing it away will accelerate corrosion rather than prevent it. Water under high pressure and steam are particularly effective in removing accumulated mud and corrosive materials.

- When cleaning lower door panels, rocker panels and frame members, be sure that drain holes are kept open so that moisture can escape and not be trapped inside to accelerate corrosion.

■Keep your garage dry

Don't park your vehicle in a damp, poorly ventilated garage. This creates a favorable environment for corrosion. This is particularly true if you wash your vehicle in the garage or drive it into the garage when it is still wet or covered with snow, ice or mud. Even a heated garage can contribute to corrosion unless it is well ventilated so moisture is dispersed.

■Keep paint and trim in good condition

Scratches or chips in the finish should be covered with "touch-up" paint as soon as possible to reduce the possibility of corrosion. If bare metal is showing through, the attention of a qualified body and paint shop is recommended.
Bird droppings : Bird droppings are highly corrosive and may damage painted surfaces in just a few hours. Always remove bird droppings as soon as possible.

■Don't neglect the interior

Moisture can collect under the floor mats and carpeting and cause corrosion. Check under the mats periodically to be sure the carpeting is dry. Use particular care if you carry fertilizers, cleaning materials or chemicals in the vehicle.
These should be carried only in proper containers and any spills or leaks should be cleaned up, flushed with clean water and thoroughly dried.

Interior care

Interior general precautions

Prevent chemicals such as perfume, cosmetic oil, sun cream, hand cleaner, and air freshener from contacting the interior parts because they may cause damage or discoloration. If they do contact the interior parts, wipe them off immediately. If necessary, use a vinyle cleaner, see instructions for correct usage.

⚠ CAUTION

Never allow water or other liquids to come in contact with electrical/elec-

(Continued)

(Continued)

tronic components inside the vehicle as this may damage them.

⚠ CAUTION

When cleaning leather products (steering wheel, seats etc.), use neutral detergents or low alcohol content solutions. If you use high alcohol content solutions or acid/alkaline detergents, the color of the leather may fade or the surface may get stripped off.

Taking care of leather seats

- Vacuum the seat periodically to remove dust and sand on the seat.
  It will prevent abrasion or damage of the leather and maintain its quality.
- Wipe the natural leather seat cover often with dry or soft cloth.
- Sufficient use of a leather protective may prevent abrasion of the cover and helps maintain the color.
  Be sure to read the instructions and consult a specialist when using leather coating or protective agents.

- Leather with bright colors (beige, cream beige) is easily contaminated and clear in appearance. Clean the seats frequently.
- Avoid wiping with wet cloth. It may cause the surface to crack.

Cleaning the leather seats

- Remove all contaminations instantly. Refer to instructions below for removal of each contaminant.
- Cosmetic products (sunscreen, foundation, etc.)
  - Apply cleansing cream on a cloth and wipe the contaminated point. Wipe off the cream with a wet cloth and remove water with a dry cloth.
- Beverages (coffee, soft drink, etc.)
  - Apply a small amount of neutral detergent and wipe until contaminations do not smear.
- Oil
  - Remove oil instantly with absorbable cloth and wipe with stain remover for natural leather only.
- Chewing gum
  - Harden the gum with ice and remove gradually.

Fabric seat cover using precautions (If equipped)

Please clean the fabric seats regularly with a vacuum cleaner in consideration of fabric material characteristics. If they are heavily soiled with beverage stains, etc., use a suitable interior cleaner. To prevent damage to seat covers, wipe off the seat covers down to the seams with a large wiping motion and moderate pressure using a soft sponge or microfiber cloth.
Velcro closures on clothing or sharp objects may cause snagging or scratches on the surface of the seats. Make sure not to rub such objects against the surface.

Cleaning the upholstery and interior trim

Vinyl

Remove dust and loose dirt from vinyl with a whisk broom or vacuum cleaner. Clean vinyl surfaces with a vinyl cleaner.

Fabric

Remove dust and loose dirt from fabric with a whisk broom or vacuum cleaner. Clean with a mild soap solution recommended for upholstery or carpets. Remove fresh spots immediately with a fabric spot cleaner. If fresh spots do not receive immediate attention, the fabric can be stained and its color can be affected. Also, its fire-resistant properties can be reduced if the material is not properly maintained.

⚠ CAUTION

Using anything but recommended cleaners and procedures may affect the fabric's appearance and fire-resistant properties.

Cleaning the lap/shoulder belt webbing

Clean the belt webbing with any mild soap solution recommended for cleaning upholstery or carpet. Follow the instructions provided with the soap. Do not bleach or re-dye the webbing because this may weaken it.

Cleaning the interior window glass

If the interior glass surfaces of the vehicle become fogged (that is, covered with an oily, greasy or waxy film), they should be cleaned with a glass cleaner. Follow the directions on the glass cleaner container.

⚠ CAUTION

Do not scrape or scratch the inside of the rear window. This may result in damage of the rear window defroster grid.

EMISSION CONTROL SYSTEM (IF EQUIPPED)

The emission control system of your vehicle is covered by a written limited warranty. Please see the warranty information contained in the Warranty & Maintenance book in your vehicle.
Your vehicle is equipped with an emission control system to meet all applicable emission regulations.
There are three emission control systems, as follows.

1. Crankcase emission control system
2. Evaporative emission control system
3. Exhaust emission control system

In order to assure the proper function of the emission control systems, have your vehicle inspected and maintained by a professional workshop in accordance with the maintenance schedule in this manual. Kia recommends to visit an authorized Kia dealer/service partner.

Caution for the Inspection and Maintenance Test (With Electronic Stability Control (ESC) system)

- **To prevent the vehicle from misfiring during dynamometer testing, turn the Electronic Stability Control (ESC) system off by pressing the ESC switch.**
- **After dynamometer testing is completed, turn the ESC system back on by pressing the ESC switch again.**

1. Crankcase emission control system

The positive crankcase ventilation system is employed to prevent air pollution caused by blow-by gases being emitted from the crankcase. This system supplies fresh filtered air to the crankcase through the air intake hose. Inside the crankcase, the fresh air mixes with blow-by gases, which then pass through the PCV valve into the induction system.

2. Evaporative emission control system

The Evaporative Emission Control System is designed to prevent fuel vapors from escaping into the atmosphere.

Canister

Fuel vapors generated inside the fuel tank are absorbed and stored in the on-board canister. When the engine is running, the fuel vapors absorbed in the canister are drawn into the surge tank through the purge control solenoid valve.

Purge control solenoid valve (PCSV)

The purge control solenoid valve is controlled by the Engine Control Module (ECM); when the engine coolant temperature is low during idling, the PCSV closes so that evaporated fuel is not taken into the engine. After the engine warms up during ordinary driving, the PCSV opens to introduce evaporated fuel to the engine.

3. Exhaust emission control system

The Exhaust Emission Control System is a highly effective system which controls exhaust emissions while maintaining good vehicle performance.

Engine exhaust gas precautions (carbon monoxide)

- Carbon monoxide can be present with other exhaust fumes. Therefore, if you smell exhaust fumes of any kind inside your vehicle, have it inspected and repaired immediately. If you ever suspect exhaust fumes are coming into your vehicle, drive it only with all the windows fully open. Have your vehicle checked and repaired immediately.

⚠ WARNING

■ Exhaust

Engine exhaust gases contain carbon monoxide (CO). Though colorless and odorless, it is dangerous and could be lethal if inhaled. Follow the instructions on this page to avoid CO poisoning.

- Do not operate the engine in confined or closed areas (such as garages) any more than what is necessary to move the vehicle in or out of the area.
- When the vehicle is stopped in an open area for more than a short time with the engine running, adjust the ventilation system (as needed) to draw outside air into the vehicle.
- Never sit in a parked or stopped vehicle for any extended time with the engine running.
- When the engine stalls or fails to start, excessive attempts to restart the engine may cause damage to the emission control system.

Operating precautions for catalytic converters (if equipped)

⚠ WARNING

■ Fire

- **A hot exhaust system can ignite flammable items under your vehicle. Do not park the vehicle over or near flammable objects, such as grass, vegetation, paper, leaves, etc.**
- **The exhaust system and catalytic system are very hot while the engine is running or immediately after the engine is turned off. Keep away from the exhaust system and catalytic, you may get burned. Also, do not remove the heat sink around the exhaust system, do not seal the bottom of the vehicle or do not coat the vehicle for corrosion control. It may present a fire risk under certain conditions.**

Your vehicle is equipped with a catalytic converter emission control device. Therefore, the following precautions must be observed:

- Make sure to refuel your vehicle according to the "Fuel requirements" on page 2-03.
- Do not operate the vehicle when there are signs of engine malfunction, such as misfire or a noticeable loss of performance.
- Do not misuse or abuse the engine. Examples of misuse are coasting with the ignition off and descending steep grades in gear with the ignition off.
- Do not operate the engine at high idle speed for extended periods (5 minutes or more).
- Do not modify or tamper with any part of the engine or emission control system. All inspections and adjustments must be made by a professional workshop. Kia recommends to visit an authorized Kia dealer/service center.
- Avoid driving with an extremely low fuel level. Running out of fuel could cause the engine to misfire, damaging the catalytic converter.

Failure to observe these precautions could result in damage to the catalytic converter and to your vehicle.
Additionally, such actions could void your warranties.

Gasoline Particulate Filter (GPF) (if equipped)

The Gasoline Particulate Filter (GPF) is the system that removes the soot from the exhaust gas. Unlike a disposable air filter, the GPF system automatically burns (oxidizes) and removes the accumulated soot while driving.

However, repeated short-distance driving or long-distance driving at a low speed can stop the accumulated soot from automatically being removed by the GPF system. If the accumulated soot reaches a certain amount, the GPF warning light ( ) will illuminate. To re-operate the GPF system, the vehicle should be driven for more than 30 minutes at a speed of 80 km/h (50 mph) and faster. Ensure the following conditions are met: safe road conditions, transmission 3 or above, and engine speed of 1,500-4,000 rpm. Driving at 80 km/h (50 mph) or faster for recommended hours will get the GPF system back to work and stop the GPF warning light.

If the GPF warning light stays on or the warning message "Check exhaust system" pops up even after driving at recommended speed and for recommended hours, visit a professional workshop and check the GPF system. Kia recommends to visit an authorized Kia dealer/service partner. Constant driving with the GPF warning light on can damage the GPF system and undermine fuel economy.

Specifications & Consumer information

Dimensions.....9-02
Engine.....9-03
Gross vehicle weight.....9-04
Luggage volume.....9-05
Air conditioning system.....9-06
Bulb wattage.....9-07
Tires and wheels (for Europe).....9-09
Tires and wheels (except Europe).....9-11
Recommended lubricants and capacities.....9-13
Recommended SAE viscosity number.....9-14
Vehicle identification number (VIN).....9-16
Vehicle certification label.....9-17
Tire specification and pressure label.....9-18
Engine number.....9-19
Air conditioner compressor label.....9-20
Refrigerant label.....9-21
Declaration of conformity.....9-22
Fuel Label 9-23
Hybrid vehicle.....9-23
Plug-in Hybrid vehicle.....9-23
How to check the symbol on the charging label 9-24
Precautions for charging AC and Trickle charger (Portable charging cable) (AC charging).....9-24
Electric charging label (For Europe).....9-26
Electric charging label symbol table (For Europe).....9-26

DIMENSIONS

Item			Size (mm)
Overall length			4,355
Overall width			1,805
Overall height	Without Roof rack		1,535
	With Roof rack		1,545
Tread	Front	205/60R16	1,565
		225/45ZR18*	1,555
	Rear	205/60R16	1,579
		225/45ZR18*	1,569
Wheelbase			2,700

* This tire is only for the HEV (Hybrid Electric Vehicle) system

ENGINE

Item	(Gasoline) 1.6 GDi
Displacement [cc]	1,580
Bore x Stroke [mm]	72 X 97
Firing order	1-3-4-2
No. of cylinders	4 In-line, DOHC

GROSS VEHICLE WEIGHT

Item	Hybrid	Plug-in Hybrid
	(Gasoline) 1.6 GDi	
	DCT	
GVW kg (lbs)	1,930 kg (4,255 lbs)	2,000 kg (4,409 lbs)

LUGGAGE VOLUME

For HEV

Item		Volume
VDA	MIN.	436 liter
	MAX.	1,434 liter

Min: Behind rear seat to upper edge of the seat back.

Max: Behind front seat to roof.

For PHEV

Item		Volume
VDA	MIN.	324 liter
	MAX.	1,322 liter

Min: Behind rear seat to upper edge of the seat back.

Max: Behind front seat to roof.

AIR CONDITIONING SYSTEM

Item	Weight of volume	Classification
Refrigerant	550 ± 25g	R-1234yf
	550 ± 25g	R-134a
Compressor lubricant	130 ± 10g	POE

Please contact a professional workshop for more details. Kia recommends to contact an authorized Kia dealer/service partner.

BULB WATTAGE

Light Bulb			Wattage (W)	Bulb type
Front	Headlamps (Low/High)	Bulb type	60	HB3
		LED type	LED	LED
	Headlamps (Low)		LED	LED
	Turn signal lamps	Bulb type	21	PY21W
		LED type	LED	LED
	Position lamps		LED	LED
	Daytime running light		LED	LED
	Fog lamps	Bulb type	51	HB4
		LED type	LED	LED
	Side Repeater lamps		LED	LED
Rear	Stop/Tail lamps		21/5	P21/5W
	Stop lamps		LED	LED
	Tail lamps	Bulb type	10	W5W 2EA
		LED type	LED	LED
	Turn signal lamps		21	P21W
	Fog lamp*1		LED	LED
	Back-up lamp		16	W16W
	License plate lamps		5	W5W
	High mounted stop lamp		LED	LED

*1 If equipped

Light Bulb			Wattage (W)	Bulb type
Interior	Map lamp	Bulb type	10	WEDGE
		LED type	LED	LED
	Vanity mirror lamps*1		5	FESTOON
	Room lamp	Bulb type	10	FESTOON
		LED type	LED	LED
	Tailgate lamp	Bulb type	10	FESTOON
		LED type	LED	LED

*1 If equipped

TIRES AND WHEELS (FOR EUROPE)

Item	Tire size	Wheel size	Load capacity		Speed capacity		Inflation pressure [bar (psi, kPa)]				Wheel lug nut torque [Kgf·m (lbf·ft, N·m)]
							Normal load		Maximum load		
			LI *1	Kg	SS *2	Km/h	Front	Rear	Front	Rear	
Full size tire	205/60 R16	6.5J x 16	92	630	H	210	2.5 (36, 250)		2.5 (36, 250)		11~13 (79~94, 107~127)
	225/45 ZR18 *3	7.5J x 18	91	615	W	270	2.5 (36, 250)		2.5 (36, 250)		
Compact spare tire	T125/80 D16 *3	4T x 16	97	730	M	130	4.2 (60, 420)		4.2 (60, 420)		

*1 Load Index
*2 Speed Symbol
*3 Only for Hybrid Electric Vehicle (HEV).

✻ NOTICE

- We recommend that when replacing tires, use the same originally supplied with the vehicles. If not, that affects driving performance.
- When driving in high altitude grades, it is natural for the atmospheric pressure to decrease. Therefore, please check the tire pressure and add more air when necessary. Additionally required tire air pressure per km above sea level: 1.5 psi/km

⚠ CAUTION

When replacing tires, use the same size originally supplied with the vehicle.
Using tires of a different size can damage the related parts or make it work irregularly.

TIRES AND WHEELS (EXCEPT EUROPE)

Item	Tire size	Wheel size	Load capacity		Speed capacity		Inflation pressure [bar (psi, kPa)]				Wheel lug nut torque [Kgf·m (lbf·ft, N·m)]
							Normal load		Maximum load		
			LI *1	Kg	SS *2	Km/h	Front	Rear	Front	Rear	
Full size tire	205/60 R16	6.5J x 16	92	630	H	210	2.5 (36, 250)		2.5 (36, 250)		11~13 (79~94, 107~127)
	225/45 R18 *3	7.5J x 18	91	615	V	240	2.5 (36, 250)		2.5 (36, 250)		
Compact spare tire	T125/80 D16 *3	4T x 16	97	730	M	130	4.2 (60, 420)		4.2 (60, 420)		

*1 Load Index
*2 Speed Symbol
*3 Only for Hybrid Electric Vehicle (HEV).

✻ NOTICE

- We recommend that when replacing tires, use the same originally supplied with the vehicles. If not, that affects driving performance.
- When driving in high altitude grades, it is natural for the atmospheric pressure to decrease. Therefore, please check the tire pressure and add more air when necessary. Additionally required tire air pressure per km above sea level: 1.5 psi/km

⚠ CAUTION

When replacing tires, use the same size originally supplied with the vehicle.
Using tires of a different size can damage the related parts or make it work irregularly.

RECOMMENDED LUBRICANTS AND CAPACITIES

Lubricant		Volume	Classification
Engine oil [*1] (drain and refill) Recommends Kia RECOMMENDS RECOMMANDE РЕКОМЕНДУЕТ TOTAL QUARTZ		3.8 liter (4.01 US qt.)	SAE 5W-30, API Latest (ILSAC Latest) or ACEA A5/B5
Dual Clutch Transmission (DCT) Fluid		1.6 ~ 1.7 liter (1.69 ~ 1.79 US qt.)	API GL-4, SAE 70W HK D DCTF TGO-10 PLUS (SK) SPIRAX S6 GHDE 70W DCTF PLUS (H.K.SHELL)
Coolant		5.8 liter (6.13 US.qt.)	Mixture of antifreeze and water (Ethylene glycol base coolant for aluminum radiator)
Inverter coolant		2.43 liter (2.56 US qt.)	Mixture of antifreeze and water (Ethylene glycol base coolant for aluminum radiator)
Brake fluid		402.6 ± 24.4 cc (0.425 ± 0.025 US qt.)	DOT 3 or DOT 4
Engine clutch actuator fluid		100 ± 20 cc (0.105 ± 0.021 US qt.)	DOT 3 or DOT 4
Fuel	HEV	45 liter (11.9 gal)	Refer to “Fuel requirements” on page 2-03.
	PHEV	43 liter (11.4 gal)	

[*1] Refer to “Recommended SAE viscosity numbers” on page 9-14.

Recommended SAE viscosity number

⚠ CAUTION

Always be sure to clean the area around any filler plug, drain plug, or dipstick before checking or draining any lubricant. This is especially important in dusty or sandy areas and when the vehicle is used on unpaved roads. Cleaning the plug and dipstick areas will prevent dirt and grit from entering the engine and other mechanisms that could be damaged.

Engine oil viscosity (thickness) has an effect on fuel economy and cold weather operating (engine start and engine oil flowability). Lower viscosity engine oils can provide better fuel economy and cold weather performance, however, higher viscosity engine oils are required for satisfactory lubrication in hot weather. Using oils of any viscosity other than those recommended could result in engine damage. When choosing an oil, consider the range of temperature your vehicle will be operated in before the next oil change. Proceed to select the recommended oil viscosity from the chart.

Temperature Range for SAE Viscosity Numbers										
Temperature	°C	-30	-20	-10	0	10	20	30	40	50
	(°F)	-10	0	20		40	60	80	100	120
(Gasoline) 1.6 GDi *1		5W-30								

*1: Requires <API Latest(ILSAC Latest) or ACEA A5/B5, Full synthetic> grade engine oil. If a lower grade engine oil(mineral oil including Semi-synthetic) is used, then the engine oil and oil filter must be replaced as indicated severe maintenance condition.

An engine oil displaying this American Petroleum Institute (API) Certification Mark conforms to the International Lubricant Specification Advisory Committee (ILSAC). It is recommended to only use engine oils that uphold this API Certification Mark.

VEHICLE IDENTIFICATION NUMBER (VIN)

■ Frame number

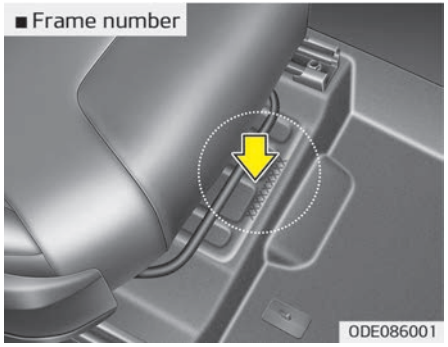

The vehicle identification number (VIN) is the number used in registering your vehicle and in all legal matters pertaining to its ownership, etc.
The number is punched on the floor under the passenger seat. To check the number, open the cover.

■ VIN label (if equipped)

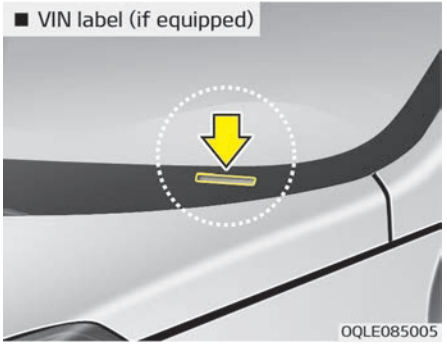

The VIN is also on a plate attached to the top of the dashboard. The number on the plate can easily be seen through the windshield from outside.

VEHICLE CERTIFICATION LABEL

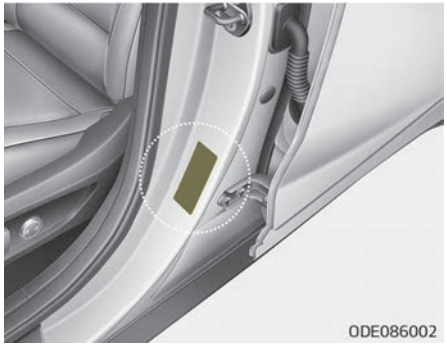

The vehicle certification label attached on the driver's (or front passenger's) side center pillar gives the vehicle identification number (VIN).

TIRE SPECIFICATION AND PRESSURE LABEL

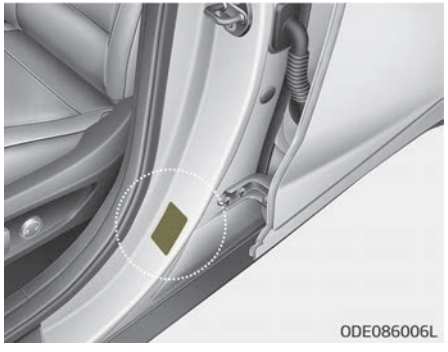

The tires supplied on your new vehicle are chosen to provide the best performance for normal driving.
The tire label located on the driver's side center pillar gives the tire pressures recommended for your vehicle.

ENGINE NUMBER

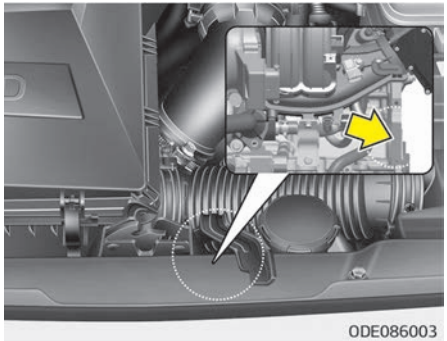

The engine number is stamped on the engine block as shown in the drawing.

AIR CONDITIONER COMPRESSOR LABEL

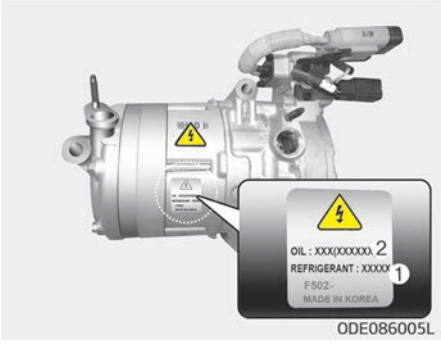

A compressor label informs you the type of compressor your vehicle is equipped with such as model, supplier part number, production number, refrigerant (1) and refrigerant oil (2).

REFRIGERANT LABEL

The refrigerant label is located on the underside of the hood.

DECLARATION OF CONFORMITY

■ Example

CE0678B

The radio frequency components of the vehicle comply with requirements and other relevant provisions of Directive 1995/5/EC.
Further information including the manufacturer's declaration of conformity is available on Kia web site as follows;
http://www.kia-hotline.com

FUEL LABEL (IF EQUIPPED)

Hybrid vehicle

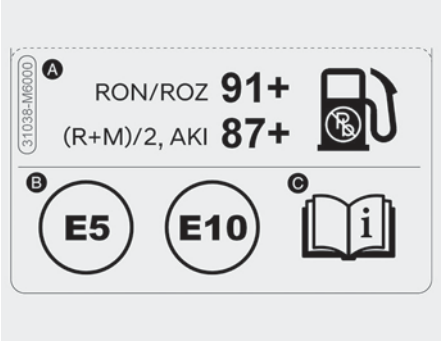

The fuel label is attached on the fuel filler door.

A- Octane rating of unleaded Gasoline (Petrol)
  1. RON/ROZ : Research Octane Number
  2. (R+M)/2, AKI : Anti Knock Index

B- Identifiers for Petrol-type fuels
❊ This symbol means usable fuel. Do not use any other fuel.

C- For further details, refer to "Fuel Requirements" on page 2-03.

Plug-in Hybrid vehicle

■ For Europe

■ Except Europe

The fuel label is attached on the fuel filler door.

A- Octane rating of unleaded Gasoline (Petrol)
  1. RON/ROZ : Research Octane Number
  2. (R+M)/2, AKI : Anti Knock Index

B- Identifiers for Petrol-type fuels
❊ This symbol means usable fuel. Do not use any other fuel.

C- For further details, refer to "Fuel Requirements" on page 2-03.

D- Add fuel into the fuel tank within 20 min.

HOW TO CHECK THE SYMBOL ON THE CHARGING LABEL (FOR EUROPE)

Precautions for charging AC and Trickle charger (Portable charging cable) (AC charging)

Vehicle charging INLET	Charging connector OUTLET
ODEPQ010018	ODEEV090005L

Vehicle charging INLET	Charging connector OUTLET
	<Symbol location and application example>

1. After opening the charging door, check the charging symbol at the bottom of the warning label
2. Check the charging connector symbol of the AC and Trickle charger cable
3. After checking the English matching of the charging symbol, proceed with the charging process

❈ Refer to "Electric charging label symbol table" on page 9-26

4. Risk of failure, fire, injury, etc. expected when using the symbol unmatched charging connector

Electric charging label (For Europe)

The electric charging label is attached on the charging door.

①	Warning for high voltage
②	
③	
④	Identifier for charging door
⑤	For further details, refer to "How to check the symbol on the charging label" on page 9-24.
⑥	Charging voltage and current ~ : AC single phase
⑦	Identifiers for charging type. Refer to "Electric charging label symbol table" on page 9-26.

Electric charging label symbol table (For Europe)

AC and Trickle charger charging

Supply Type	Con-figura-tion	Type of ac-cesso-ry	Volt-age range	Identi-fier
AC	7P	Vehi-cle con-nector and vehicle inlet	≤480V RMS	C

Appendix

VETRARAKSTUR (ICELANDIC VERSION).....10-02
Akstur í snjó eða hálku.....10-02
Uppsetning á keðjum.....10-03

VETRARAKSTUR (ICELANDIC VERSION)

Akstur í þungri færð og vetrarveðri leiðir til aukins slits á ökutækinu og skapar ýmis vandamál. Hægt er að draga úr erfiðleikum sem fylgja vetrarakstri ef farið er að þessum ráðleggingum:

Akstur í snjó eða hálku

Við akstur í djúpum snjó kann að vera nauðsynlegt að nota vetrarhjólbarða eða setja keðjur á hjólbarðana. Reynist nauðsynlegt að nota vetrarhjólbarða þarf að velja hjólbarða af sömu stærð og gerð og venjulegu hjólbarðarnir. Sé það ekki gert getur það dregið úr öryggi og skert aksturseiginleika ökutækisins.
Hraðakstur, skyndileg hröðun, nauðhemlun og krappar beygjur geta enn fremur falið í sér mikla hættu.
Þegar dregið er úr hraða er ráðlegt að beita vélarhemlun sem kostur er.
Við nauðhemlun á snævi þöktum eða hálum vegum getur ökutækið hæglega runnið til. Nauðsynlegt er að halda hæfilegri fjarlægð á milli þíns ökutækis og ökutækisins fyrir framan. Alltaf ætti að beita hemlinum mjúklega. Hafa ber í huga að ef keðjur eru settar á hjólbarða fæst aukinn drifkraftur en það hindrar þó ekki að ökutækið renni til hliðanna.

✻ TILKYNNING

Notkun snjókeðja er ólögleg í sumum ríkjum. Kynnið ykkur gildandi landslög áður en keðjur eru settar upp.

Vetrarhjólbarðar

Ef vetrarhjólbarðar eru settir á ökutækið þarf að gæta þess að nota þverofna hjól- barða af sömu stærð og ásþunga og upprunalegu hjólbarðarnir. Setjið vetrarhjólbarða á öll fjögur hjólin til að tryggja örugga stýringu ökutækisins við öll veðurskilyrði. Hafið í huga að á auðum vegi kunna vetrarhjólbarðar að hafa minna grip en hjólbarðarnir sem fylgdu ökutækinu. Því þarf að aka af gætni, jafnvel á auðum vegum. Ráðfærið ykkur við söluaðila hjólbarðanna um ráðlagðan hámarkshraða.

⚠ VIÐVÖRUN

■ Stærðir vetrarhjólbarða (framhald)

(framhald)

Vetrarhjólbarðar ættu að vera af sömu stærð og gerð og hjólbarðarnir sem fylgdu ökutækinu.
Misræmi á því getur dregið úr öryggi og skert aksturseiginleika ökutækisins.

Áður en negldir hjólbarðar eru settir upp er rétt að kynna sér reglugerðir um notkun slíkra hjólbarða í viðkomandi landi, fylki eða sveitarfélagi.

Keðjur á hjólbarða

Hliðar þverofinna hjólbarða eru þynnri en á öðrum hjólbörðum og sumar gerðir snjókeðja geta því valdið skemmdum á þeim. Því er ráðlegt að nota vetrarhjólbarða fremur en keðjur, ef þess er kostur.
Setjið aldrei keðjur á hjólbarða ökutækja sem búin eru álfelgum þar sem keðjurnar geta valdið skemmdum á felgunum. Ef óhjákvæmilegt reynist að nota keðjur skal nota vírkeðjur sem eru innan við 12 mm á þykkt. Ábyrgðartrygging söluaðila ökutækisins tekur ekki til skemmda sem orsakast af rangri notkun snjókeðja. Snjókeðjur skal aðeins setja á framhjólbarðana.

⚠ VARÚÐ

- **Gætið þess að snjókeðjurnar séu af þeirri stærð og gerð sem hæfir hjólbörðunum. Notkun snjókeðja af rangri gerð getur valdið skemmdum á yfirbyggingu og fjöðrun ökutækisins og kann að falla utan ábyrgðartryggingar söluaðila ökutækisins. Þá geta festikrókar keðjanna skemmst vegan núnings við íhluti ökutækisins og snjókeðjurnar losnað af hjólbarðanum. Gætið þess að snjókeðjurnar séu með SAE vottun í S-flokki.**
- **Eftir um það bil 0,5-1 km akstur skal ævinlega skoða keðjurnar aftur til að tryggja að þær hafi verið settar upp á réttan og öruggan hátt. Herðið keðjurnar eða setjið þær aftur á ef þær hafa losnað.**
- **Ef hjólbarðar ökutækisins eru 18 tommur skal ekki nota snjókeðjur. Þær geta valdið skemmdum á ökutækinu (hjólum, fjöðrun og yfirbyggingu).**

Uppsetning á keðjum

Þegar keðjur eru settar á skal fylgja leiðbeiningum framleiðanda og herða keðjurnar eins mikið og unnt er.
Þegar keðjur hafa verið settar á skal aka hægt. Ef hljóð heyrist sem bendir til að keðjurnar séu í snertingu við yfirbyggingu eða undirvagn er rétt að nema staðar og herða keðjurnar. Ef snerting virðist enn eiga sér stað skal hægja aksturinn þar til hljóðið þagnar.
Takið keðjurnar niður um leið og komið er á rudda og snjólausa vegi.

⚠ VIÐVÖRUN

■ Uppsetning á keðjum

Þegar snjókeðjur eru settar upp skal leggja ökutækinu á sléttum fleti fjarri umferð. Kveikið á viðvörunarljósum ökutækisins og setjið þríhyrningslaga viðvörunarskilti upp fyrir aftan ökutækið, ef það er tiltækt. Hafið ökutækið ævinlega í stöðuhemli og drepið á vélinni áður en snjókeðjur eru settar upp.

⚠ VIÐVÖRUN

■ Keðjur á hjólbarða

- **Notkun keðja getur skert akstursr- eiginleika ökutækisins.**
- **Akið ekki hraðar en 30 km/klst. eða samkvæmt ráðlögðum hámarkshraða framleiðanda keðjanna, hvort sem reynist lægra.**
- **Akið gætilega og sneiðið hjá þústum, holum, kröppum beygjum og öðrum hættum á veginum, sem gætu valdið hristingi ökutækisins.**
- **Forðist krappar beygjur eða læsta hemlun.**

⚠ VARÚÐ

- **Séu snjókeðjur af rangri stærð eða rangt upp settar geta þær valdið skemmdum á hemlalögn, fjöðrun, yfirbyggingu og hjólum ökutækisins.**

(framhald)

(framhald)

- **Hvenær sem hljóð bendir til þess að keðjurnar sláist við ökutækið skal stöðva akstur og herða keðjurnar.**

A

Advanced smart cruise control system
- Set Smart Cruise Control Reaction.....6-106
- To convert to Cruise Control mode.....6-106

Air bag warning label.....4-66

Air bag warning light.....4-48

Air bags.....4-44
- Air bag inflation and non-inflation conditions.....4-63
- Air bag warning label.....4-66
- Air bag warning light.....4-48
- Curtain air bag.....4-60
- Driver's and passenger's front air bag.....4-52
- Inflation conditions.....4-63
- Inflation conditions (Air bags).....4-63
- Operation.....4-45
- Passenger's front air bag ON/OFF switch.....4-55
- Side air bag.....4-58
- SRS care.....4-64
- SRS components and functions.....4-49

Air cleaner.....8-37
- Filter replacement.....8-37

Air conditioner compressor label.....9-20

Air conditioning system.....5-131
- Automatic climate control system.....5-131

Air conditioning system lubricants.....9-06

Air ventilation seat.....5-150

Anti-lock brake system (ABS).....6-39

Appearance care.....8-104
- Exterior care.....8-104
- Interior care.....8-108

Armed stage.....5-11

Ashtray.....5-146

AUTO HOLD.....6-36

Automatic climate control system.....5-131
- Automatic heating and air conditioning.....5-132
- Climate control air filter.....8-38

Automatic transaxle
- Shift-lock override.....6-23

B

Basic function.....6-86

Battery (Plug-in Hybrid).....8-42

Battery replacement.....5-09

Battery saver function.....5-107

Before driving.....6-06

Blind-Spot Collision Warning (BCW).....6-69

Bonnet: see "Hood".....5-27

Brake fluid.....8-33

Brake system..... 6-28
Anti-lock brake system (ABS)..... 6-39
AUTO HOLD..... 6-36
Electronic parking brake (EPB)..... 6-31
Electronic stability control (ESC)..... 6-41
Emergency Stop Signal (ESS)..... 6-46
Foot parking brake..... 6-29
Hill-start assist control (HAC)..... 6-45
Parking brake..... 6-29,8-36
Power brakes..... 6-28
Vehicle stability management (VSM)..... 6-44
Bulb replacement..... 8-83
Bulb wattage..... 9-07
Button start/stop: see "Engine Start/Stop button"..6-11

C

Capacities (Lubricants)..... 9-13
Care of seat belts..... 4-31
Care
Care of seat belts..... 4-31
Exterior care..... 8-104
Interior care..... 8-108
SRS care..... 4-64
Tire care..... 8-46
Cargo security screen..... 5-157
Center console storage..... 5-144
Central door lock switch..... 5-15
Chains - tire..... 6-143
Child restraint system..... 4-33
Installing a Child Restraint System (CRS)..... 4-35
ISOFIX anchorage and top-tether anchorage (ISOFIX anchorage system) for children..... 4-36
Selecting a Child Restraint System (CRS)..... 4-33
Climate control air filter..... 5-128,8-38
Combined cluster: see "Instrument cluster"..... 5-50
Compact spare tire..... 7-22
Compact spare tire replacement..... 8-51
Coolant..... 8-29
Cooling fluid: see "Engine coolant"..... 8-29
Crankcase emission control system..... 8-111
Cruise Control..... 6-91
Cruise Control (CC)
Driving Assist button..... 6-92
Cruise control system
To cancel cruise control..... 6-93
To decrease the cruising speed..... 6-93
To increase cruise control set speed..... 6-92
To resume cruising speed at more than approximately 30 km/h..... 6-94
To set cruise control speed..... 6-92

To temporarily accelerate with the cruise control on....6-93
Cup holder....5-146
Curtain air bag....4-60

D

Dashboard: see "Instrument cluster"....5-50
Day/night rearview mirror....5-46
Daytime running light....5-107
Declaration of conformity....6-125,9-22
Defogging (windshield)....5-141
Defroster (rear window)....5-125
Dimensions....9-02
Disarmed stage....5-12
Displays: see "Instrument cluster"....5-50
Door lock/unlock features....5-16
Door locks....5-14
Central door lock switch....5-15
Door lock/unlock features....5-16
From inside the vehicle....5-15
From outside the vehicle....5-14
Drinks holder: see "Cup holder"....5-146
Driver attention warning (DAW)....6-86
Driver position memory system....4-11
Driver's and passenger's front air bag....4-52
Driving at night....6-140
Driving in flooded areas....6-141
Driving in the rain....6-140
Driving off-road....6-141
Dual clutch transmission (DCT)....6-16

E

Economical operation....6-136
Electric power steering....5-42
Electrochromic mirror (ECM)....5-47
Electronic parking brake (EPB)....6-31
Electronic stability control (ESC)....6-41
Emergency starting....7-05
Jump starting....7-05,7-06,7-07
Push starting....7-09
Emergency Stop Signal (ESS)....6-46
Emergency tailgate safety release....5-20
Emergency towing....7-35
Emergency while driving....7-03
Emission control system....8-111
Crankcase emission control system....8-111
Evaporative emission control system....8-111

Exhaust emission control system.....8-111
Gasoline Particulate Filter (GPF)..... 8-113
Engine..... 9-03
Engine compartment.....3-07,8-04
Engine coolant..... 8-29
Engine number..... 9-19
Engine oil..... 8-27
Engine overheats..... 7-10
Engine Start/Stop button.....6-11
ENGINE START/STOP button position.....6-11
ENGINE START/STOP button position.....6-11
Illuminated ENGINE START/STOP button..... 6-11
ENGINE START/STOP button illumination.....6-11
Engine will not start..... 7-04
Evaporative emission control system.....8-111
Exhaust emission control system..... 8-111
Explanation of scheduled maintenance items.....8-25
Exterior care.....8-104
Exterior features..... 5-158
Roof rack.....5-158
Exterior overview (Front)..... 3-02
Exterior overview (Rear).....3-02

F

Flat tire..... 7-17
Changing tires..... 7-18
Compact spare tire.....7-22
Jack and tools.....7-17
Removing the spare tire.....7-18
Storing the spare tire.....7-18
Floor mat anchor(s)..... 5-155,5-156
Fluid
Brake fluid.....8-33
Washer fluid.....8-35
Fog light (front).....5-113
Fog light (rear)..... 5-114
Folding the outside rearview mirror.....5-49
Foot parking brake.....6-29
Forward Collision-Avoidance Assist (FCA)(Sensor Fusion)..... 6-48
Forward Collision-avoidance Assist (FCA)
Function malfunction.....6-54
Forward Collision-Avoidance Assist setting and activation.....6-48
Forward/Reverse Parking Distance Warning (PDW).....5-101
Front seat adjustment (manual).....4-05

Front seat adjustment (power).....4-06
Fuel gauge.....5-57
Fuel Label.....9-23
Hybrid vehicle.....9-23
Plug-in Hybrid vehicle.....9-23
Fuel requirements.....2-03
Function malfunction.....6-54
Fuse switch.....8-58
Fuses.....8-56
Fuse switch.....8-58
Fuse/relay panel description..... 8-61,8-62,8-63
Instrument panel fuse.....8-57
Multi fuse.....8-59,8-60

G

Gasoline Particulate Filter (GPF).....8-113
Gauges.....5-53
Glove box.....5-144

H

Hazard warning flasher.....7-02
Hazardous driving conditions.....6-138
Headlight (Headlamp) escort function.....5-107
Headlight bulb replacement.....8-83
Headlight position.....5-108
Headrest (front).....4-07,4-15
Heated steering wheel.....5-44
Heater
Automatic climate control system.....5-132
High beam operation.....5-110
Highway driving.....6-141
Hill-start assist control (HAC).....6-45
Hood.....5-27
Horn.....5-45
How to check the symbol on the charging label (For Europe).....9-24
How to use this manual.....2-02
Hybrid Battery SOC (State of Charge) Gauge.....5-55
Hybrid system gauge.....5-54

I

Ignition switch illumination.....6-08
Ignition switch position.....6-08
Immobilizer system.....5-05
Indicator lights.....5-92
Inside rearview mirror.....5-46

Instrument cluster.....5-50
Gauges.....5-53
Indicator lights.....5-92
Instrument cluster control.....5-51
Trip computer.....5-74
Trip modes.....5-74
User settings mode.....5-65
Warning and indicator lights.....5-86
Warning lights.....5-86
Instrument panel fuse.....8-57
Instrument panel overview.....3-05
Intelligent speed limit warning (ILSW)
ISLW activation/deactivation.....6-81
Operation.....6-82
Intelligent Speed Limit Warning (ISLW)
Display.....6-82
Interior care.....8-108
Interior features.....5-146
Air ventilation seat.....5-150
Ashtray.....5-146
Cargo security screen.....5-157
Cup holder.....5-146
Floor mat anchor(s).....5-155,5-156
Luggage net holder.....5-157
Power outlet.....5-150
Sun visor.....5-147
USB charger.....5-151,5-154
Vanity mirror lamp.....5-123
Wireless smart phone charger.....5-153
Interior lamp AUTO turn off function.....5-121
Interior light.....5-121
Interior lamp AUTO turn off function.....5-121
Map lamp.....5-121
Room lamp.....5-122
Tailgate room lamp.....5-122
Vanity mirror lamp.....5-123
Interior overview.....3-04
ISOFIX system.....4-36

J

Jack and tools.....7-17
Jump starting.....7-05,7-06,7-07

K

Key operations.....5-04
Key positions.....6-08
Ignition switch position.....6-08
Illuminated ignition switch.....6-08
Keys.....5-04
Immobilizer system.....5-05
Key operations.....5-04

Record your key number.....5-04

L

Label
Air bag warning label..... 4-66
Air conditioner compressor label..... 9-20
Refrigerant label.....9-21
Tire sidewall labeling.....8-51
Tire specification and pressure label.....9-18
Vehicle certification label..... 9-17
Lane Following Assist (LFA).....6-111
Lane Keeping Assist (LKA..... 6-62
Lap belt.....4-24
Lap/shoulder belt.....4-23
LCD display control..... 5-62
LCD display modes.....5-63
LCD display
Indicator lights..... 5-92
LCD display control.....5-62
LCD display modes..... 5-63
Trip computer.....5-74
Trip computer mode..... 5-64
Trip modes.....5-74
User settings mode.....5-65
Warning and indicator lights.....5-86
Warning lights..... 5-86
Leading vehicle departure alert function.....6-86
Light bulbs.....8-83
Lighting.....5-107
Auto light..... 5-109
Battery saver function.....5-107
Daytime running light.....5-107
Front fog light.....5-113
Headlight (Headlamp) escort function.....5-107
Headlight position..... 5-108
High beam operation..... 5-110
Parking light position..... 5-108
Rear fog light..... 5-114
Turn signals..... 5-113
Lubricants and capacities.....9-13
Luggage box..... 5-145
Luggage net holder..... 5-157
Luggage volume.....9-05

M

Maintenance schedule.....8-09
Maintenance services.....8-05
Maintenance
Explanation of scheduled maintenance items.....8-25
Maintenance services..... 8-05

Scheduled maintenance service.....8-09
Tire maintenance.....8-51
Manual climate control system
Air conditioning.....5-138
Climate control air filter.....5-128
Map lamp.....5-121
Mirrors.....5-46
Day/night rearview mirror.....5-46
Electrochromic mirror (ECM).....5-47
Folding the outside rearview mirror.....5-49
Inside rearview mirror.....5-46
Outside rearview mirror.....5-47
Remote control.....5-48
Multi fuse.....8-59,8-60

O

Odometer.....5-59
Oil (engine).....8-27
Outside rearview mirror.....5-47
Outside temperature gauge.....5-59
Overheats.....7-10

P

Panorama sunroof
Sunroof open warning.....5-41
Parking assist system
Types of warning indicator and sound.....5-103
Parking brake.....6-29,8-36
Parking distance warning - reverse
Parking distance warning - reverse.....5-98
Types of warning sound.....5-98
Parking light position.....5-108
Passenger's front air bag ON/OFF switch.....4-55
Plug-in hybrid mode indicator.....5-56
Power brakes.....6-28
Power outlet.....5-150
Power window lock button.....5-25
Pre-tensioner seat belt.....4-27
Precautions (seat belt).....4-29
Precautions for charging AC and Trickle charger (Portable charging cable) (AC charging).....9-24
Push starting.....7-09

R

Rear Cross-traffic Collision Warning (RCCW).....6-117
Rear Occupant Alert (ROA) system.....5-17
Rear seat.....4-12

Rear view monitor (RVM)
Rear view monitor (RVM).....5-96
Rear View While Driving.....5-96
Rear window defroster.....5-125
Recommended cold tire inflation pressures 8-46
Recommended lubricants and capacities..... 9-13
Recommended SAE viscosity number.....9-14
Record your key number.....5-04
Reducing the risk of a rollover.....6-138
Refrigerant label..... 9-21
Regenerative braking system.....6-25
Remote control (outside rear view mirror)..... 5-48
Remote keyless entry system..... 5-07
Remote keyless entry system operations.....5-07
Smart key system operation..... 5-07
Transmitter precautions..... 5-08
Remote keyless entry system operations..... 5-07
Remote keyless entry
Battery replacement..... 5-09
Replacement light bulb..... 8-83
Resetting the sunroof.....5-40
Road warning.....7-02
Rocking the vehicle.....6-139
Roof rack.....5-158
Room lamp.....5-122
Rotation (Tire).....8-48

S

Scheduled maintenance service..... 8-09
Seat belt restraint system.....4-17
Seat belts..... 4-17
Care of seat belts..... 4-31
Lap belt.....4-24
Lap/shoulder belt.....4-23
Pre-tensioner seat belt.....4-27
Precautions.....4-29
Seat belt restraint system..... 4-17
Stowing the rear seat belt.....4-26
Seats..... 4-02
Driver position memory system.....4-11
Front seat adjustment (manual)..... 4-05
Front seat adjustment (power)..... 4-06
Headrest (front).....4-07,4-15
Rear seat.....4-12
Shift-lock override - Automatic transaxle..... 6-23
Side air bag.....4-58
Smart Cruise Control (SCC).....6-95
Smart cruise control with Stop & Go system
Speed setting..... 6-96

Smart key system operation.....5-07
Smooth cornering.....6-140
Snow tires.....6-142
Spare tire.....7-17
Changing tires.....7-18
Compact spare tire.....7-22
Compact spare tire replacement.....8-51
Removing the spare tire.....7-18
Storing the spare tire.....7-18
Special driving conditions.....6-138
Driving at night.....6-140
Driving in flooded areas.....6-141
Driving in the rain.....6-140
Driving off-road.....6-141
Hazardous driving conditions.....6-138
Highway driving.....6-141
Rocking the vehicle.....6-139
Smooth cornering.....6-140
Speed Limit Information Function (SLIF).....6-81
Driver's attention.....6-84
Speedometer.....5-53
SRS care.....4-64
SRS components and functions.....4-49
Starting difficulties, see engine will not start.....7-04
Steering wheel
Electric power steering.....5-42
Heated steering wheel.....5-44
Horn.....5-45
Tilt and telescopic steering.....5-43
Storage compartment.....5-144
Center console storage.....5-144
Glove box.....5-144
Luggage box.....5-145
Sunglass holder.....5-145
Stowing the rear seat belt.....4-26
Sun visor.....5-147
Sunglass holder.....5-145
Sunroof.....5-37
Resetting the sunroof.....5-40
Sunshade.....5-37
Sunroof open warning.....5-41
Sunshade.....5-37

T

Tailgate.....5-19
Emergency tailgate safety release.....5-20
Non-power tailgate closing.....5-20
Non-power tailgate opening.....5-19
Tailgate room lamp.....5-122
Theft-alarm stage.....5-12
Theft-alarm system.....5-11

Armed stage.....5-11
Disarmed stage.....5-12
Theft-alarm stage.....5-12
Tilt and telescopic steering.....5-43
Tire care.....8-46
Tire chains.....6-143
Tire Mobility Kit (T.M.K).....7-26
Tire pressure monitoring system.....7-11
Tire rotation.....8-48
Tire specification and pressure label.....9-18
Tires and wheels.....8-46,9-09
Compact spare tire replacement.....8-51
Low aspect ratio tire.....8-54
Recommended cold tire inflation pressures.....8-46
Tire care.....8-46
Tire maintenance.....8-51
Tire replacement.....8-49
Tire rotation.....8-48
Tire sidewall labeling.....8-51
Tire traction.....8-51
Wheel alignment and tire balance.....8-49
Wheel replacement.....8-51
To set speed limit.....6-78
Towing.....7-34
Emergency towing.....7-35
Removable towing hook.....7-35
Trailer towing.....6-146
Transmitter precautions.....5-08
Trip computer.....5-74
Trip computer mode.....5-64
Trip modes.....5-74
Turn signals.....5-113

U

USB charger.....5-151,5-154
User settings mode.....5-65

V

Vanity mirror lamp.....5-123
Vehicle break-in process.....2-08
Vehicle certification label.....9-17
Vehicle handling instructions.....2-06
Vehicle identification number (VIN).....9-16
Vehicle modifications.....2-07
Vehicle stability management (VSM).....6-44
Vehicle weight.....6-156

W

Warning and indicator lights..... 5-86
Warning lights.....5-86
Washer fluid.....8-35
Welcome system..... 5-124
Wheel alignment and tire balance.....8-49
Wheel replacement.....8-51
Windows..... 5-22
  Power window lock button..... 5-25
Windshield defrosting and defogging..... 5-141
Windshield washers.....5-118
Winter driving.....6-142
  Snow tires.....6-142
  Tire chains..... 6-143
Wiper blades..... 8-39
Wipers and washers.....5-116
  Windshield washers..... 5-118
Wireless smart phone charger..... 5-153