ON ENG FOREWORD.qxp 1/14/2019 1:46 PM Page 1

FOREWORD

Dear Customer,

Thank you for selecting your new Kia vehicle.

As a global car manufacturer focused on building high-quality vehicles with exceptional value, Kia Motors is dedicated to providing you with a customer service experience that exceeds your expectations.

This Owner's Manual will acquaint you with the operation of features and equipment that are either standard or optional on this vehicle, along with themaintenance needs of this vehicle. Therefore, you may find some description and illustrations not applicable to your vehicle. You are advised to read this publication carefully and follow the instructions and recommendations. Pleas always keep this manual in the vehicle for your, and any subsequent owner's reference.

All information contained in this Owner's Manual was accurate at the time of publication. However, as Kia continues to make improvements to its products the company reserves the right to make changes to this manual or any of its vehicles at any time without notice and without incurring any obligations. Please drive safely, and enjoy your Kia vehicle!

© 2019 Kia MOTORS AMERICA, Inc.

All rights reserved. May not be reproduced or translated in whole or in part without the written consent of Kia Motors America, Inc.

Printed in U.S.A.

ON ENG FOREWORD.qxp 1/14/2019 1:46 PM Page 2

ON ENG FOREWORD.qxp 1/14/2019 1:46 PM Page 3

TABLE OF CONTENTS

Introduction	1
Your vehicle at a glance	2
Safety features of your vehicle	3
Features of your vehicle	4
Driving your vehicle	5
What to do in an emergency	6
Maintenance	7
Specifications & Consumer information	8
Index	I

ON ENG 1.qxp 3/18/2019 2:14 PM Page 1

Introduction

1

How to use this manual 1-2
Fuel requirements 1-3
• Gasoline engine 1-3
Vehicle handling instructions 1-6
Vehicle modifications 1-6
Vehicle break-in process 1-6
Risk of burns when parking or stopping vehicle . . 1-7

ON ENG 1.qxp 3/18/2019 2:14 PM Page 2

HOW TO USE THIS MANUAL

We want to help you get the greatest possible driving pleasure from your vehicle. Your Owner's Manual can assist you in many ways. We strongly recommend that you read the entire manual. In order to minimize the chance of death or injury, you must read the WARNING and CAUTION sections in the manual.

Illustrations complement the words in this manual to best explain how to enjoy your vehicle. By reading your manual, you learn about features, important safety information, and driving tips under various road conditions.

The general layout of the manual is provided in the Table of Contents. Use the index when looking for a specific area or subject; it has an alphabetical listing of all information in your manual.

Sections: This manual has eight sections plus an index. Each section begins with a brief list of contents so you can tell at a glance if that section has the information you want.

You will find various WARNINGs, CAUTIONs, and NOTICEs in this manual. These WARNINGs were prepared to enhance your personal safety. You should carefully read and follow ALL procedures and recommendations provided in these WARNINGs, CAUTIONs and NOTICEs.

⚠ WARNING

A WARNING indicates a situation in which harm, serious bodily injury or death could result if the warning is ignored.

⚠ CAUTION

A CAUTION indicates a situation in which damage to your vehicle could result if the caution is ignored.

✻ NOTICE

A NOTICE indicates interesting or helpful information is being provided.

ON ENG 1.qxp 3/18/2019 2:14 PM Page 3

FUEL REQUIREMENTS

Gasoline engine

Unleaded

For Europe

For the optimal vehicle performance, we recommend you to use unleaded gasoline with an octane rating of RON (Research Octane Number) 95 / AKI (Anti Knock Index) 91 or higher.

You may use unleaded gasoline with an octane rating of RON 91~94 / AKI 87~90 but it may result in slight performance reduction of the vehicle. (Do not use methanol blended fuels.)

Except Europe

Your new Kia vehicle is designed to use only unleaded fuel having an Octane Rating of RON (Research Octane Number) 91 / AKI (Anti-Knock Index) 87 or higher. (Do not use methanol blended fuels.)

Your new vehicle is designed to obtain maximum performance with UNLEADED FUEL, as well as minimize exhaust emissions and spark plug fouling.

⚠ CAUTION

NEVER USE LEADED FUEL. The use of leaded fuel is detrimental to the catalytic converter and will damage the engine control system's oxygen sensor and affect emission control.

Never add any fuel system cleaning agents to the fuel tank other than what has been specified. (Kia recommends to consult an authorized Kia dealer/service partner for details.)

⚠ WARNING

- **Do not "top off" after the nozzle automatically shuts off when refueling.**
- **Always check that the fuel cap is installed securely to prevent fuel spillage in the event of an accident.**

Leaded (if equipped)

For some countries, your vehicle is designed to use leaded gasoline. When you are going to use leaded gasoline, Kia recommends to visit an authorized Kia dealer/service partner and ask whether leaded gasoline in your vehicle is available or not.

Octane Rating of leaded gasoline is same with unleaded one.

ON ENG 1.qxp 3/18/2019 2:14 PM Page 4

Gasoline containing alcohol and methanol

Gasohol, a mixture of gasoline and ethanol (also known as grain alcohol), and gasoline or gasohol containing methanol (also known as wood alcohol) are being marketed along with or instead of leaded or unleaded gasoline.

Do not use gasohol containing more than 10% ethanol, and do not use gasoline or gasohol containing any methanol. Either of these fuels may cause drivability problems and damage to the fuel system, engine control system and emission control system.

Discontinue using gasohol of any kind if drivability problems occur.

Vehicle damage or drivability problems may not be covered by the manufacturer's warranty if they result from the use of:

1. Gasohol containing more than 10% ethanol.
2. Gasoline or gasohol containing methanol.
3. Leaded fuel or leaded gasohol.

⚠ CAUTION

Never use gasohol which contains methanol. Discontinue use of any gasohol product which impairs drivability.

Other fuels

Using fuels such as

- Silicone (Si) contained fuel,
- MMT (Manganese, Mn) contained fuel,
- Ferrocene (Fe) contained fuel, and
- Other metalic additives contained fuels, may cause vehicle and engine damage or cause plugging, misfiring, poor acceleration, engine stalling, catalyst melting, abnormal corrosion, life cycle reduction, etc.

  Also, the Malfunction Indicator Lamp (MIL) may illuminate.

✻ NOTICE

Damage to the fuel system or performance problem caused by the use of these fuels may not be covered by your New Vehicle Limited Warranty.

ON ENG 1.qxp 3/18/2019 2:14 PM Page 5

Use of MTBE

Kia recommends avoiding fuels containing MTBE (Methyl Tertiary Butyl Ether) over 15.0% vol. (Oxygen Content 2.7% weight) in your vehicle.

Fuel containing MTBE over 15.0% vol. (Oxygen Content 2.7% weight) may reduce vehicle performance and produce vapor lock or hard starting.

⚠ CAUTION

Your New Vehicle Limited Warranty may not cover damage to the fuel system and any performance problems that are caused by the use of fuels containing methanol or fuels containing MTBE (Methyl Tertiary Butyl Ether) over 15.0% vol. (Oxygen Content 2.7% weight.)

Do not use methanol

Fuels containing methanol (wood alcohol) should not be used in your vehicle. This type of fuel can reduce vehicle performance and damage components of the fuel system, engine control system and emission control system.

Fuel Additives

Kia recommends that you use unleaded gasoline which has an octane rating of RON (Research Octane Number) 95 / AKI (Anti Knock Index) 91 or higher (for Europe) or Octane Rating of RON (Reasearch Octane Number) 91 / AKI (Anti-Knock Index) 87 or higher (except Europe).

For customers who do not use good quality gasolines including fuel additives regularly, and have problems starting or the engine does not run smoothly, one bottle of additives added to the fuel tank at every 15,000km (For Europe) / 10,000km (Except Europe). Additives are available from a professional workshop along with information on how to use them. Kia recommends to visit an authorized Kia dealer/service partner.

Operation in foreign countries

If you are going to drive your vehicle in another country, be sure to:

- Observe all regulations regarding registration and insurance.
- Determine that acceptable fuel is available.

ON ENG 1.qxp 3/18/2019 2:14 PM Page 6

VEHICLE HANDLING INSTRUCTIONS

As with other vehicles of this type, failure to operate this vehicle correctly may result in loss of control, an accident or vehicle rollover.

Specific design characteristics (higher ground clearance, track, etc.) give this vehicle a higher center of gravity than other types of vehicles. In other words they are not designed for cornering at the same speeds as conventional 2-wheel drive vehicles. Avoid sharp turns or abrupt maneuvers. Again, failure to operate this vehicle correctly may result in loss of control, an accident or vehicle rollover. **Be sure to read the "Reducing the risk of a rollover" driving guidelines, in chapter 5 of this manual.**

VEHICLE MODIFICATIONS

This vehicle should not be modified. Modification of your vehicle could affect its performance, safety or durability and may even violate governmental safety and emissions regulations.

In addition, damage or performance problems resulting from any modification may not be covered under warranty.

- If you use unauthorized electronic devices, it may cause the vehicle to operate abnormally, wire damage, battery discharge and fire. For your safety, do not use unauthorized electronic devices.

VEHICLE BREAK-IN PROCESS

No special break-in period is needed. By following a few simple precautions for the first 1,000 km (600 miles) you may add to the performance, economy and life of your vehicle.

- Do not race the engine.
- While driving, keep your engine speed (rpm, or revolutions per minute) within 3,000 rpm.
- Do not maintain a single speed for long periods of time, either fast or slow. Varying engine speed is needed to properly break-in the engine.
- Avoid hard stops, except in emergencies, to allow the brakes to seat properly.
- Don't tow a trailer during the first 2,000 km (1,200 miles) of operation.

ON ENG 1.qxp 3/18/2019 2:14 PM Page 7

RISK OF BURNS WHEN PARKING OR STOPPING VEHICLE.

- Do not park or stop the vehicle near flammable items such as leaves, paper, oil, and tire. Such items placed near the exhaust system can become a fire hazard.
- When an engine idles at a high speed with the rear side of the vehicle touching the wall, heat of the exhaust gas can cause discoloration or fire. Keep enough space between the rear part of the vehicle and the wall.
- Be sure not to touch the exhaust/catalytic systems while engine is running or right after the engine is turned off. There is a risk of burns since the systems are extremely hot.

ON ENG 2.qxp 3/18/2019 2:15 PM Page 1

Your vehicle at a glance

Exterior overview 2-2
Interior overview 2-4
Instrument panel overview 2-5
Engine compartment 2-6

ON ENG 2.qxp 3/18/2019 2:15 PM Page 2

EXTERIOR OVERVIEW

■ Front view



1. Hood 4-43
2. Head lamp (Features of your vehicle)..4-130
   Head lamp (Maintenance) 7-76
3. Front fog lamp
   (Features of your vehicle).....4-135
   Front fog lamp (Maintenance).....7-77
4. Wheel and tire (Maintenance) 7-42
   Wheel and tire (Specification) 8-7
5. Outside rearview mirror 4-64
6. Dual Sunroof.....4-48
7. Front windshield wiper blades
   (Features of your vehicle).....4-140
   Front windshield wiper blades
   (Maintenance).....7-33
8. Windows 4-37
9. Parking distance warning 4-120

❈ The actual shape may differ from the illustration.

OON018001L

ON ENG 2.qxp 3/18/2019 2:15 PM Page 3

■ Rear view

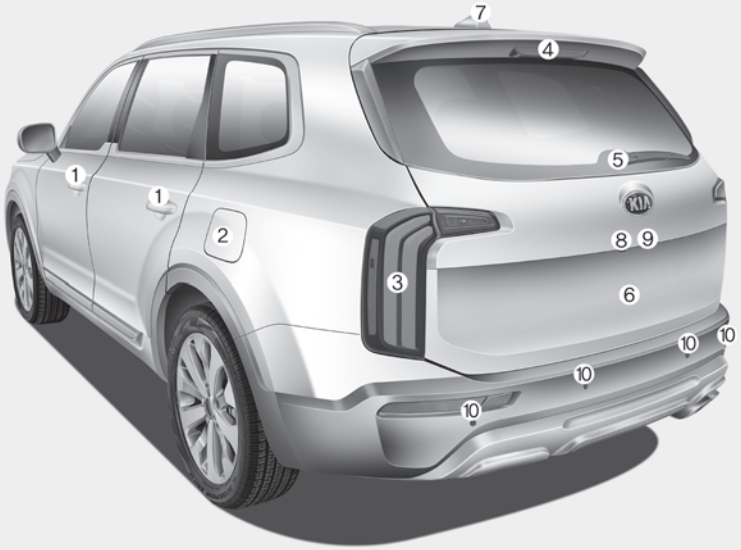

1. Door locks.....4-14
2. Fuel filler lid 4-45
3. Rear combination lamp (Maintenance)..7-78
4. High mounted stop lamp (Maintenance).....7-81
5. Rear window wiper blade 7-33
6. Tailgate.....4-24
7. Antenna 4-208
8. Tailgate open switch 4-24
9. Rear view monitor.....4-125
10. Parking distance warning (Reverse).....4-116 , 4-120

❈ The actual shape may differ from the illustration.

OON018002L

ON ENG 2.qxp 3/18/2019 2:15 PM Page 4

INTERIOR OVERVIEW



1. Inside door handle 4-15
2. Driver position memory button.....3-10
3. Outside rearview mirror folding.....4-66
4. Outside rearview mirror selection 4-65
5. Outside rearview mirror control.....4-65
6. Central Door lock/unlock switch.....4-16
7. Power window switch 4-37
8. Power window lock button.....4-40
   Electronic Child Safety Lock switch 4-18
9. Instrument panel illumination control switch 4-69
10. BCW/BCA On/Off button.....5-128
11. LKA system On/OFF button.....5-114
12. ESC Off button.....5-47
13. Tailgate open/close button 4-26
14. Steering wheel 4-53
15. Tilt and telescopic steering control lever.....4-54
16. Brake pedal.....5-30
17. Hood release lever.....4-43
18. Inner fuse panel 7-54
19. Seat.....3-2

❊ The actual shape may differ from the illustration.

OON018003L

ON ENG 2.qxp 3/18/2019 2:16 PM Page 5

INSTRUMENT PANEL OVERVIEW

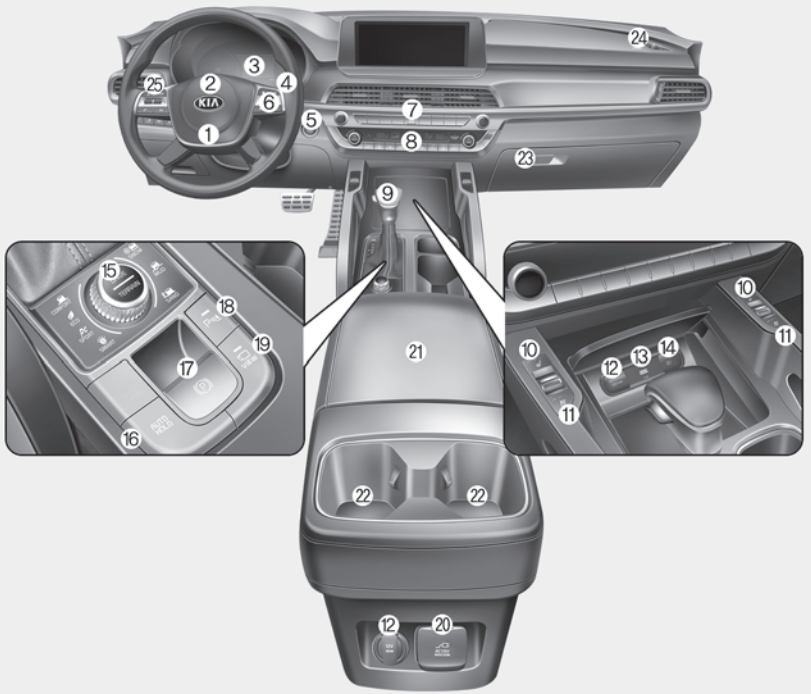

✻The actual shape may differ from the illustration.

1. Driver's front air bag 3-61
2. Horn 4-55
3. Instrument cluster 4-68
4. Wiper and washer control lever 4-140
5. Engine Start/Stop button 5-7
6. Cruise control button 5-82
   Smart cruise control with stop & go 5-87
7. Hazard warning flasher.....6-2
8. Climate control system.....4-150 , 4-165
9. Shift lever.....5-12
10. Front seat warmer switch 4-193
11. Front seat air ventilation switch 4-195
12. Power outlet.....4-196
13. USB port.....4-208
14. USB charger 4-198
15. Terrain mode dial 5-20
    Drive mode dial 5-56, 5-61
16. AUTO HOLD button.....5-40
17. EPB switch.....5-34
18. Parking distance warning system
    On/Off button 4-120
19. Surround view monitoring system
    On/Off button 4-126
20. AC inverter.....4-199
21. Center console storage box.....4-187
22. Cup holder 4-191
23. Glove box.....4-187
24. Passenger's front air bag.....3-61
25. Lighting control lever.....4-130

OON018004L

ON ENG 2.qxp 3/18/2019 2:16 PM Page 6

ENGINE COMPARTMENT

■ **Gasoline Engine (Lambda II 3.8L - GDI)**

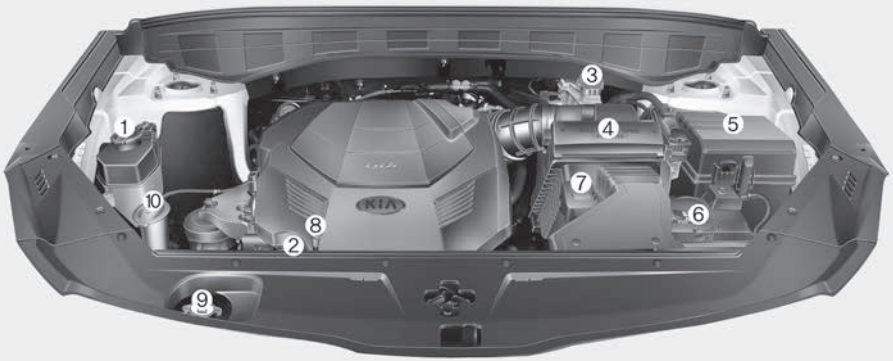

1. Engine coolant reservoir 7-23
2. Engine oil filler cap.....7-22
3. Brake fluid reservoir 7-26
4. Air cleaner.....7-29
5. Fuse box 7-54
6. Negative battery terminal.....7-37
7. Positive battery terminal.....7-37
8. Engine oil dipstick 7-21
9. Radiator cap.....7-25
10. Windshield washer fluid reservoir ...7-27

❈ The actual engine cover in the vehicle may differ from the illustration.

OON078001L

ON ENG 3.qxp 1/14/2019 1:53 PM Page 1

Safety features of your vehicle

Seats 3-2
- **Front seat 3-2**
- **Front seat adjustment - manual. 3-7**
- **Front seat adjustment - power. 3-8**
- **Driver position memory system (for power seat). . . 3-10**
- **Headrest (for front seat) 3-13**
- **Seatback pocket. 3-16**
- **Seatback hook 3-16**
- **Rear seat adjustment 3-17**

Seat belts 3-29
- **Seat belt restraint system 3-29**
- **Pre-tensioner seat belt. 3-35**
- **Seat belt precautions 3-38**
- **Care of seat belts 3-41**

Child restraint system (CRS) 3-42
- **Our recommendation:Children always in the rear . . 3-42**
- **Selecting a Child Restraint System (CRS) 3-43**
- **Installing a Child Restraint System (CRS). 3-45**
- **ISOFIX anchorage and top-tether anchorage (ISOFIX anchorage system) for children 3-46**

Air bag - supplemental restraint system 3-53
- **How does the air bag system operate 3-54**
- **Air bag warning and indicator 3-57**
- **SRS components and functions 3-57**
- **Driver's and passenger's front air bag 3-61**
- **Side air bag 3-65**
- **Curtain air bag 3-67**
- **Why didn't my air bag go off in a collision? (Inflation and non-inflation conditions of the air bag). 3-69**
- **SRS Care 3-74**
- **Additional safety precautions. 3-75**
- **Adding equipment to or modifying your air bag-equipped vehicle 3-76**
- **Air bag warning label 3-77**

ON ENG 3.qxp 1/8/2019 3:01 PM Page 2

SEATS

■ 8 Seats

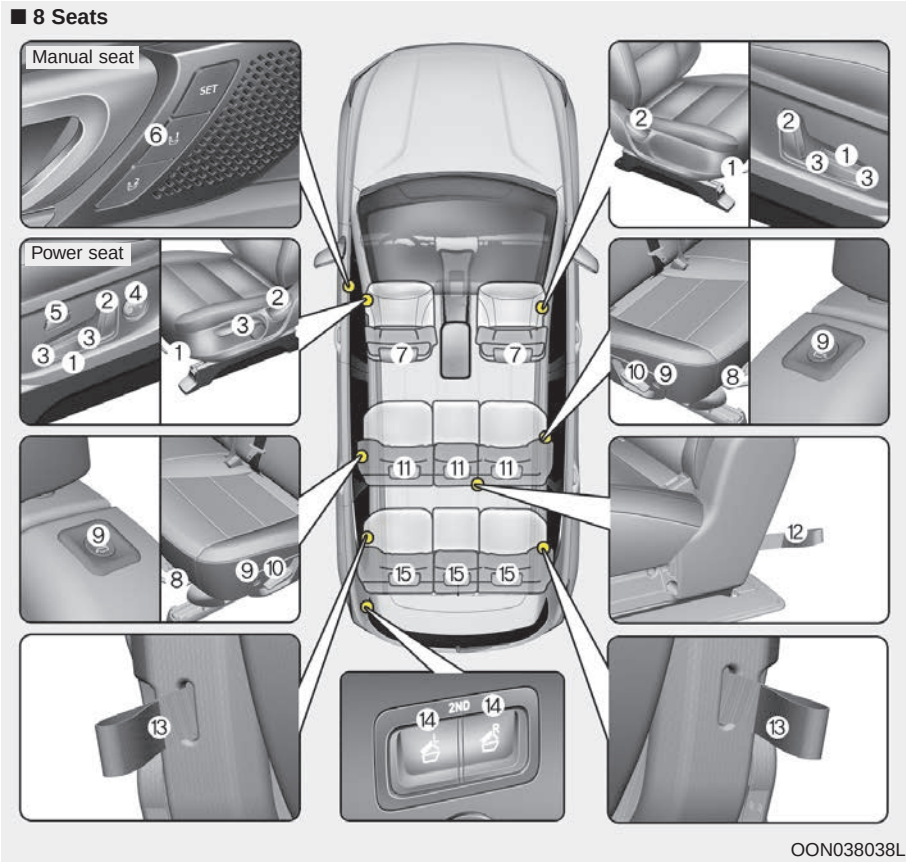

OON038038L

Front seat

(1) Forward and backward
(2) Seatback angle
(3) Seat cushion height*
(4) Lumbar support (Driver's seat)*
(5) Cushion extension (Driver's seat)*
(6) Driver position memory system*
(7) Headrest

2nd row seat

(8) Forward and backward
(9) Walk-in switch
(10) Seatback angle
(11) Headrest
(12) Walk-in strap for emergency

3rd row seat

(13) Seatback angle strap
(14) 2nd row seat remote folding button
(15) Headrest

* : if equipped

ON ENG 3.qxp 1/8/2019 3:01 PM Page 3

■ 7 Seats

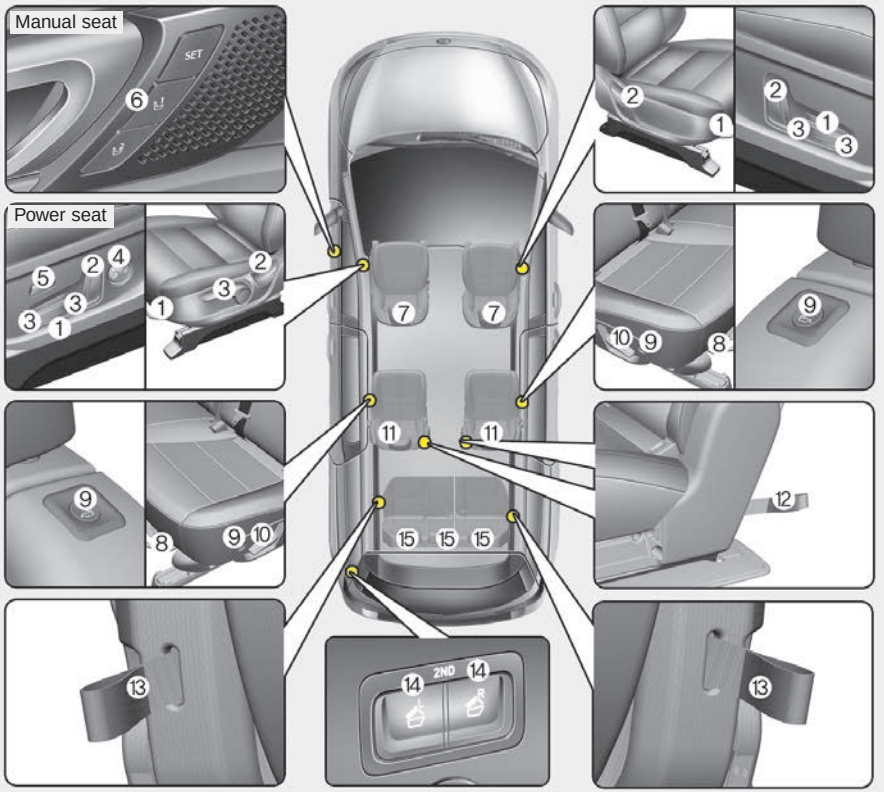

OON038039L

Front seat

(1) Forward and backward
(2) Seatback angle
(3) Seat cushion height*
(4) Lumbar support (Driver's seat)*
(5) Cushion extension (Driver's seat)*
(6) Driver position memory system*
(7) Headrest

2nd row seat

(8) Forward and backward
(9) Walk-in switch
(10) Seatback angle
(11) Headrest
(12) Walk-in strap for emergency

3rd row seat

(13) Seatback angle strap
(14) 2nd row seat remote folding button
(15) Headrest

* : if equipped

ON ENG 3.qxp 1/8/2019 3:01 PM Page 4

⚠ WARNING - Loose objects

Loose objects in the driver's foot area could interfere with the operation of the foot pedals, possibly causing an accident. Do not place anything under the front seats.

⚠ WARNING - Uprighting seat

When you return the seatback to its upright position, hold the seatback and return it slowly and be sure there are no other occupants around the seat. If the seatback is returned without being held and controlled, the back of the seat could spring forward resulting in accidental injury to a person struck by the seatback.

⚠ WARNING - Driver responsibility for passengers

Riding in a vehicle with the seatback reclined could lead to serious or fatal injury in an accident. If a seat is reclined during an accident, the occupant's hips may slide under the lap portion of the seat belt applying great force to the unprotected abdomen. Serious or fatal internal injuries could result. The driver must advise the passenger to keep the seatback in an upright position whenever the vehicle is in motion.

⚠ WARNING

Do not use a sitting cushion that reduces friction between the seat and passenger. The passenger's hips may slide under the lap portion of the seat belt during an accident or a sudden stop. Serious or fatal internal injuries could result because the seat belt cannot operate normally.

⚠ WARNING - Driver's seat

- **Never attempt to adjust the seat while the vehicle is moving. This could result in loss of control, and an accident causing death, serious injury, or property damage.**

(Continued)

ON ENG 3.qxp 1/8/2019 3:01 PM Page 5

(Continued)

- **Do not allow anything to interfere with the normal position of the seatback. Storing items against a seatback or in any other way interfering with proper locking of a seatback could result in serious or fatal injury in a sudden stop or collision.**
- **Always drive and ride with your seatback upright and the lap portion of the seat belt snug and low across the hips. This is the best position to protect you in case of an accident.**
- **In order to avoid unnecessary and perhaps severe air bag injuries, always sit as far back as possible from the steering wheel while maintaining comfortable control of the vehicle. We recommend that your chest be at least 25 cm (10 inches) away from the steering wheel.**

⚠ WARNING
- Rear seatbacks

- **The rear seatback must be securely latched. If not, passengers and objects could be thrown forward resulting in serious injury or death in the event of a sudden stop or collision.**
- **Luggage and other cargo should be laid flat in the cargo area. If objects are large, heavy, or must be piled, they must be secured.**

  Under no circumstances should cargo be piled higher than the seatbacks. Failure to follow these warnings could result in serious injury or death in the event of a sudden stop, collision or rollover.

(Continued)

(Continued)

- **No passenger should ride in the cargo area or sit or lie on folded seatbacks while the vehicle is moving. All passengers must be properly seated in seats and restrained properly while riding.**
- **When resetting the seatback to the upright position, make sure it is securely latched by pushing it forward and backwards.**
- **To avoid the possibility of burns, do not remove the carpet in the cargo area.**

  Emission control devices beneath this floor generate high temperatures.

ON ENG 3.qxp 1/8/2019 3:01 PM Page 6

⚠ WARNING

After adjusting the seat, always check that it is securely locked into place by attempting to move the seat forward or backward without using the lock release lever. Sudden or unexpected movement of the driver's seat could cause you to lose control of the vehicle resulting in an accident.

⚠ WARNING

- **Do not adjust the seat while wearing seat belts. Moving the seat cushion forward may cause strong pressure on the abdomen.**
- **Use extreme caution so that hands or other objects are not caught in the seat mechanisms while the seat is moving.**
- **Do not put a cigarette lighter on the floor or seat. When you operate the seat, gas may gush out of the lighter and cause fire.**
- **If there are occupants in the rear seats, be careful while adjusting the front seat position.**
- **Use extreme caution when picking small objects trapped under the seats or between the seat and the center console. Your hands might be cut or injured by the sharp edges of the seat mechanism.**

Feature of Seat Leather

- Leather is made from the outer skin of an animal, which goes through a special process to be available for use. Since it is a natural substance, each part differs in thickness or density.

  Wrinkles may appear as a natural result of stretching and shrinking depending on the temperature and humidity.
- The seat is made of stretchable fabric to improve comfort.
- The parts contacting the body are curved and the side supporting area is high which provides driving comfort and stability.
- Wrinkles may appear naturally from usage. It is not a fault of the product.

ON ENG 3.qxp 1/8/2019 3:01 PM Page 7

⚠ CAUTION

- ***Wrinkles or abrasions which appear naturally from usage are not covered by warranty.***
- ***Belts with metallic accessories, zippers or keys inside the back pocket may damage the seat covering.***
- ***Make sure not to wet the seat. It may change the nature of natural leather.***
- ***Jeans or clothes which could bleach may contaminate the surface of the seat covering.***

Front seat adjustment - manual

Forward and backward

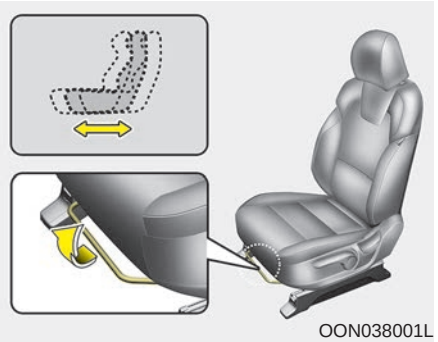

OON038001L

To move the seat forward or backward:

1. Pull the seat slide adjustment lever up and hold it.
2. Slide the seat to the position you desire.
3. Release the lever and make sure the seat is locked in place.

Adjust the seat before driving, and make sure the seat is locked securely by trying to move forward and backward without using the lever. If the seat moves, it is not locked properly.

Seatback angle

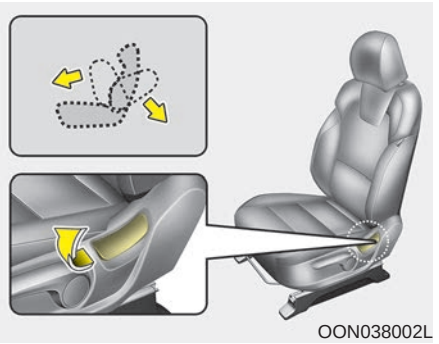

OON038002L

To recline the seatback:

1. Lean forward slightly and lift up the seatback recline lever.
2. Carefully lean back on the seat and adjust the seatback of the seat to the position you desire.
3. Release the lever and make sure the seatback is locked in place. (The lever MUST return to its original position for the seatback to lock.)

ON ENG 3.qxp 1/8/2019 3:01 PM Page 8

Seat height (if equipped)

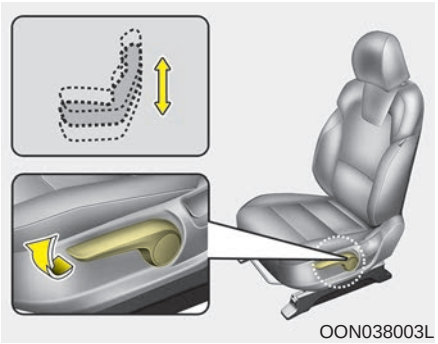

To change the height of the seat, push the lever upwards or downwards.

- To lower the seat cushion, push the lever down several times.
- To raise the seat cushion, pull the lever up several times.

Front seat adjustment - power (if equipped)

The front seat can be adjusted by using the control switches located on the outside of the seat cushion. Before driving, adjust the seat to the proper position so you can easily control the steering wheel, pedals and switches on the instrument panel.

⚠ WARNING

The power seat is operable with the ignition OFF.

Therefore, children should never be left unattended in the vehicle.

⚠ CAUTION

- ***The power seat is driven by an electric motor. Stop operating once the adjustment is completed. Excessive operation may damage the electrical equipment.***
- ***When in operation, the power seat consumes a large amount of electrical power. To prevent unnecessary charging system drain, don't adjust the power seat longer than necessary while the engine is not running.***
- ***Do not operate two or more power seat control switches at the same time. Doing so may result in power seat motor or electrical component malfunction.***

ON ENG 3.qxp 1/8/2019 3:01 PM Page 9

Forward and backward

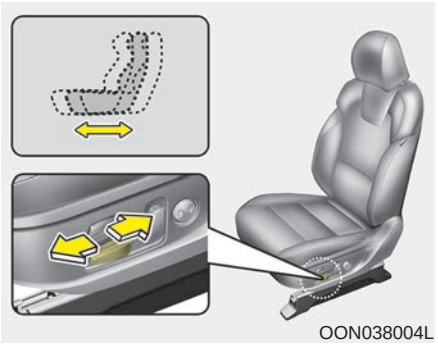
OON038004L

Push the control switch forward or backward to move the seat to the desired position. Release the switch once the seat reaches the desired position.

Cushion extension (for driver's seat, if equipped)

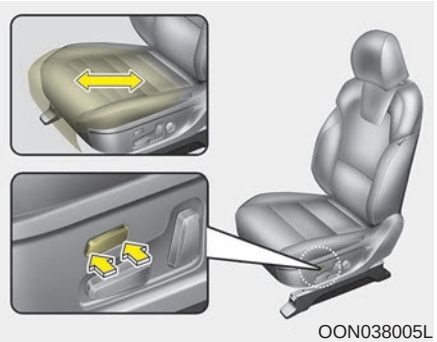
OON038005L

Press the front portion of the switch to raise the cushion extension, or the rear portion of the switch to lower it. Release the switch once the cushion extension reaches the desired position.

Seatback angle

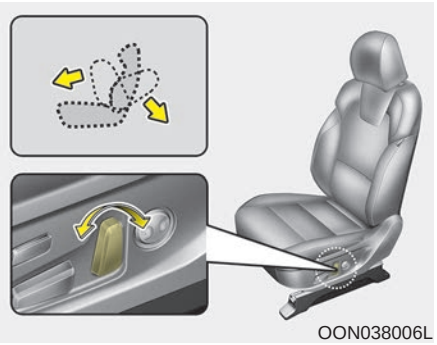
OON038006L

Push the control switch forward or backward to move the seatback to the desired angle. Release the switch once the seat reaches the desired position.

ON ENG 3.qxp 1/8/2019 3:01 PM Page 10

Seat height (if equipped)

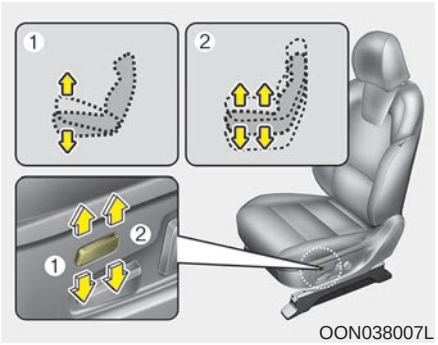

OON038007L

Pull the front portion (1) of the control switch up to raise or press down to lower the front part of the seat cushion. Pull the rear portion (2) of the control switch up to raise or press down to lower the rear part of the seat cushion. Release the switch once the seat reaches the desired position.

Lumbar support (if equipped)

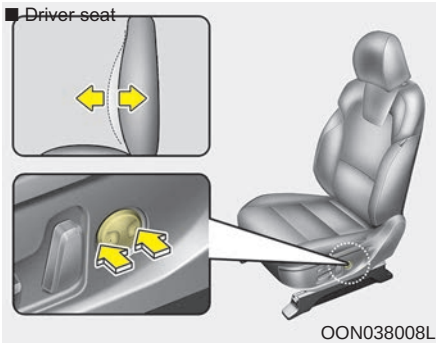

OON038008L

The lumbar support can be adjusted by pressing the lumbar support switch on the side of the seat.

1. Press the front portion of the switch to increase support, or the rear portion of the switch, to decrease support.
2. Release the switch once it reaches the desired position.

Driver position memory system (if equipped, for power seat)

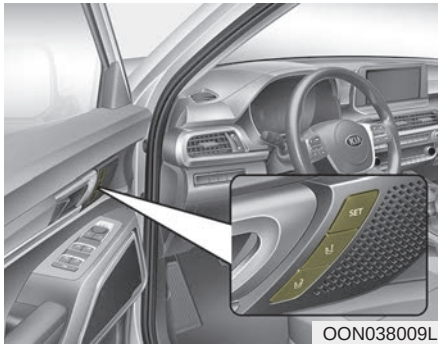

OON038009L

A driver position memory system is provided to store and recall the driver seat and outside rearview mirror position with a simple button operation. By saving the desired position into the system memory, different drivers can reposition the driver seat based upon their driving preference.

If the battery is disconnected, the position memory will be erased and the driving position should be restored in the system.

ON ENG 3.qxp 1/8/2019 3:01 PM Page 11

⚠ WARNING

Never attempt to operate the driver position memory system while the vehicle is moving.

This could result in loss of control, and an accident causing death, serious injury, or property damage.

⚠ CAUTION

The driver position memory system requires a large amount of electric power.

Refrain from using the system when the engine is stopped to prevent battery discharge.

Storing positions into memory using the buttons on the door

Storing driver's seat positions

1. Place the Engine Strat/Stop button is ON while the vehicle stop.
2. Adjust the driver's seat and outside rearview mirror comfortable for the driver.
3. Press SET button on the control panel. The system will beep once.
4. Press one of the memory buttons (1 or 2) within 4 seconds after pressing the SET button. The system will beep twice when memory has been successfully stored.

Recalling positions from memory

1. Operate following steps while vehicle stop.
2. To recall the position in the memory, press the desired memory button (1 or 2). The system will beep once, then the driver's seat will automatically adjust to the stored position.

Adjusting the control switch for the driver's seat while the system is recalling the stored position will cause the movement to stop and move in the direction that the control switch is moved.

⚠ WARNING

Use caution when recalling the adjustment memory while sitting in the vehicle. Push the seat position control switch to the desired position immediately if the seat moves too far in any direction.

ON ENG 3.qxp 1/8/2019 3:01 PM Page 12

Easy access function (if equipped)

The driver can turn off or set the driver's seat settings directly.

User setting mode in the instrument cluster:The system will move the driver's seat automatically as follows:

- For the driver's seat settings, "Convenience → Seat Easy Access → Off / Normal / Extend", and "Convenience → Seat upward/downward"
- It will move the driver's seat rearward when the engine start/stop button is changed to the OFF position and front driver's door is opened.
- It will move the driver's seat forward when the engine start/stop button is changed to the ACC or START position and front driver's Door is opened.
- It will move the driver's seat forward when you get in your vehicle with the smart key after closing the driver's door.

You can activate or deactivate this feature. Refer to "User settings" in chapter 4.

✻ NOTICE

Upward / downward movement of the seat may not work when passengers get on/off the vehicle in order to prevent foot injuries in certain places.

Driver position memory system reset

If the Driver position memory system reset fails to work, initialize the system as follows.

How to initialize:

1. Stop the car and open the driver's door with the Engine start/stop button in ON and the automatic shift lever in P(parking) position.
2. Pull the driver's seat forward as far as possible and have the seatback upright as much as possible using driver's seat forward/backward adjustment and seatback angle (recline) movement switches.
3. Push SET button and and seat fore movement switch button for 2 seconds simultaneously.

ON ENG 3.qxp 1/8/2019 3:01 PM Page 13

Initialization in the process :

1. Initialization begins as the alarm sounds.
2. The seat and seatback will automatically move backwards. The alarm sound will continue while the system is in operation.
3. Initialization will be all set after the seat and seatback move to the center with alarm sound being raised. If, however, cases as follows occur, the initialization process will come to a stop and the alarm sound will stop as well.
   - When pushing driving position memory system button
   - When pushing driver's seat height adjustment switch
   - When the driving speed exceeds 3km/h
   - When the driver's door is closed

✻ NOTICE

- **When the operation of the driver's seat and alarm sound stop during the initialization process, start the process again.**
- **Make sure that there are no obstacles around the driver's seat before starting initialization.**
- **When the initialization is finished, adjust the seat to suit the driver's body and save it back to the driver position memory system.**

Headrest (for front seat)

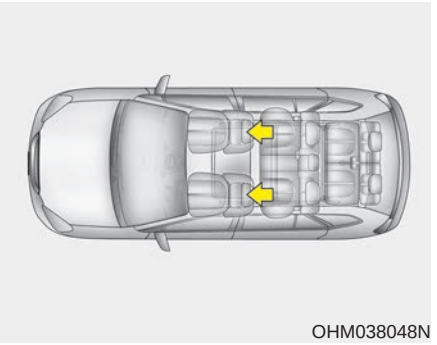

OHM038048N

The driver's and front passenger's seats are equipped with a headrest for the occupant's safety and comfort.

The headrest not only provides comfort for the driver and front passenger, but also helps protect the head and neck in the event of a collision.

ON ENG 3.qxp 1/8/2019 3:01 PM Page 14

⚠ WARNING

- **For maximum effectiveness in case of an accident, the headrest should be adjusted so the middle of the headrest is at the same height of the center of gravity of an occupant's head. Generally, the center of gravity of most people's head is similar with the height of the top of their eyes. Also, adjust the headrest as close to your head as possible. For this reason, the use of a cushion that holds the body away from the seatback is not recommended.**
- **Do not operate the vehicle with the headrests removed. Severe injury to the occupants may occur in the event of an accident. Headrests may provide protection against neck injuries when properly adjusted.**
- **Do not adjust the headrest position of the driver's seat while the vehicle is in motion.**

Adjusting the height up and down

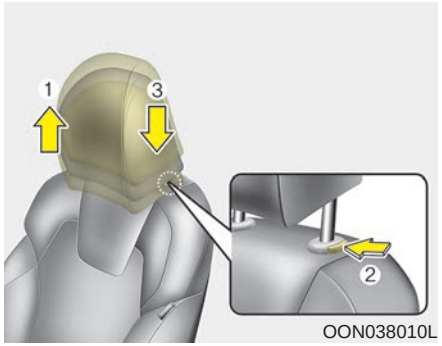

OON038010L

To raise the headrest, pull it up to the desired position (1). To lower the headrest, push and hold the release button (2) and lower the headrest to the desired position (3).

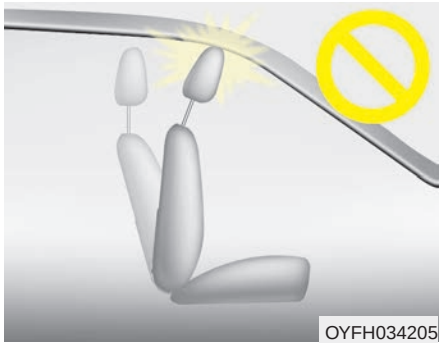
OYFH034205

⚠ CAUTION

If you recline the seatback towards the front with the headrest and seat cushion raised, the headrest may come in contact with the sunvisor or other parts of the vehicle.

ON ENG 3.qxp 1/8/2019 3:02 PM Page 15

■ Type A

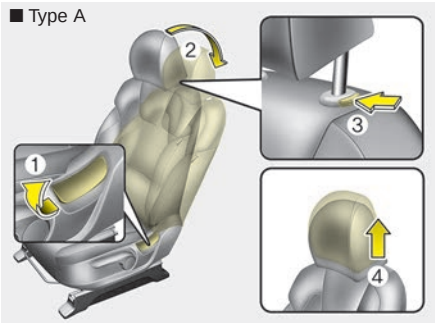

OON038011L

■ Type B

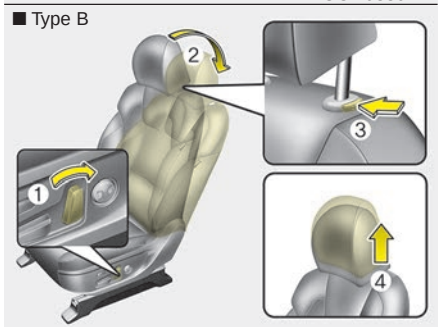

OON038012L

Removal/Reinstall

To remove the headrest:

1. Recline the seatback (2) with the recline lever or switch (1).
2. Raise headrest as far as it can go.
3. Press the headrest release button (3) while pulling the headrest up (4).

⚠ WARNING

NEVER allow anyone to ride in a seat with the headrest removed.

■ Type A

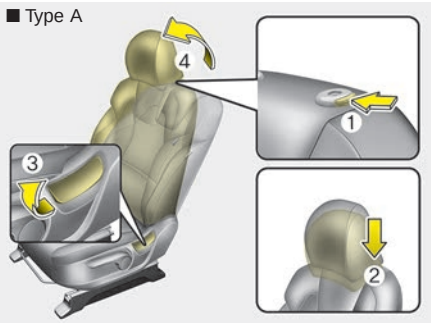

OON038013L

■ Type B

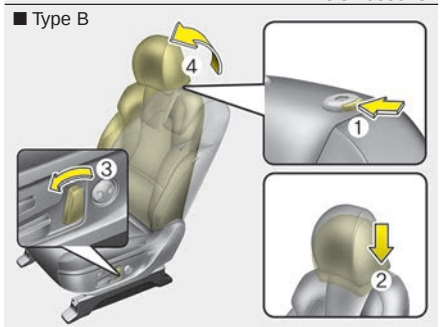

OON038014L

ON ENG 3.qxp 1/8/2019 3:02 PM Page 16

To reinstall the headrest:

1. Put the headrest poles (2) into the holes while pressing the release button or switch (1).
2. Recline the seatback(4) with the recline lever or switch (3).
3. Adjust the headrest to the appropriate height.

⚠ WARNING

Always make sure the headrest locks into position after reinstalling and adjusting it properly.

Seatback pocket

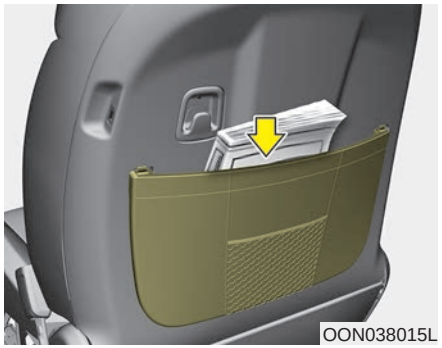

The seatback pocket is provided on the back of the front passenger's and driver's seatbacks.

⚠ WARNING - Seatback pockets

Do not put heavy or sharp objects in the seatback pockets. In an accident they could come loose from the pocket and injure vehicle occupants.

Seatback hook

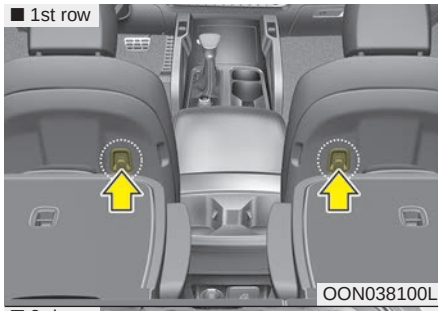

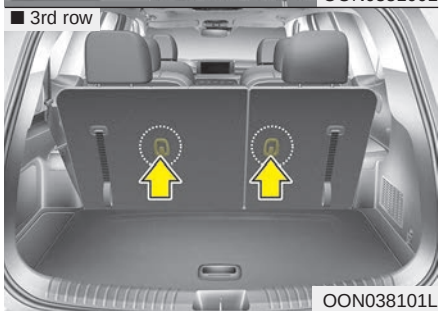

Use it when hanging light shopping bags.

ON ENG 3.qxp 1/8/2019 3:02 PM Page 17

⚠ CAUTION - Hanging clothing

Do not hang heavy clothes, since those may damage the hook.

Rear seat adjustment

Forward and backward (2nd row seat)

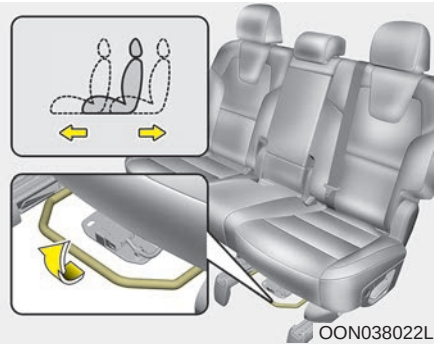

To move the seat forward or backward:

1. Pull the seat slide adjustment lever up and hold it.
2. Slide the seat to the position you desire.
3. Release the lever and make sure the seat is locked in place.

Adjust the seat before driving, and make sure the seat is locked securely by trying to move forward and backward without using the lever. If the seat moves, it is not locked properly.

ON ENG 3.qxp 1/8/2019 3:02 PM Page 18

Seatback angle (2nd row seat)

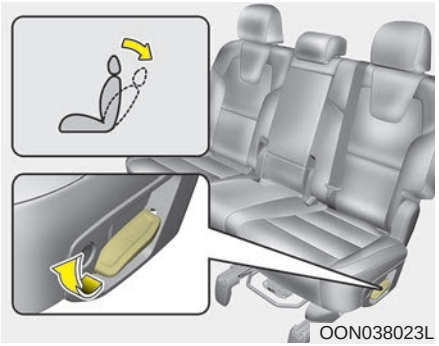
OON038023L

To recline the seatback:

1. Pull up the seatback recline lever.
2. Hold the lever and adjust the seatback of the seat to the position you desire.
3. Release the lever and make sure the seatback is locked in place. (The lever MUST return to its original position for the seatback to lock.)

Walk-in seat (2nd row seat)

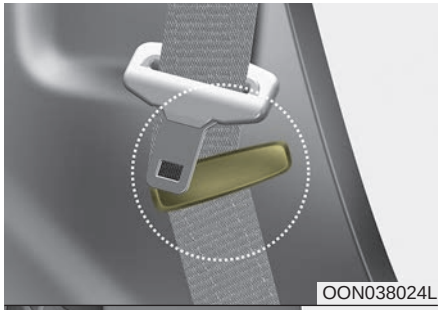
OON038024L

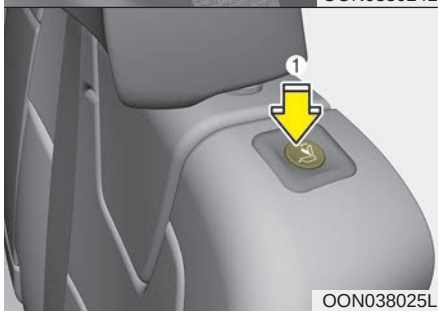

OON038025L

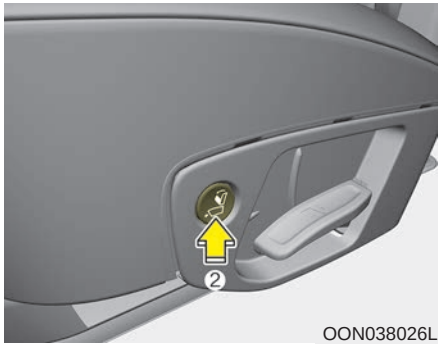

OON038026L

To get in or out of the 3rd row seat:

1. Routing the seat belt webbing through the rear seat belt guide clip. After inserting the seat belt, tighten the belt webbing by pulling it up.
2. When you press the folding switch (1) in the upper part of the 2nd-row seatback or the folding switch (2) in the outer part of the seat, the seatback is folded while the seat slightly moves forward. If necessary, move the 2nd-row seat forward by using the forward/backward position control lever.

ON ENG 3.qxp 1/8/2019 3:02 PM Page 19

3. For your safety, hold the seat when you get in/out of the vehicle.
4. After you sit down on or get up from the 3rd-row seat, adjust the position of the 2nd-row seat and set the seatback straight.

⚠ WARNING

Never attempt to adjust while the vehicle is moving or the 2nd row seat is occupied as the seat may suddenly move and cause the passenger on the seat to be injured.

Seat back angle(3rd row seat)

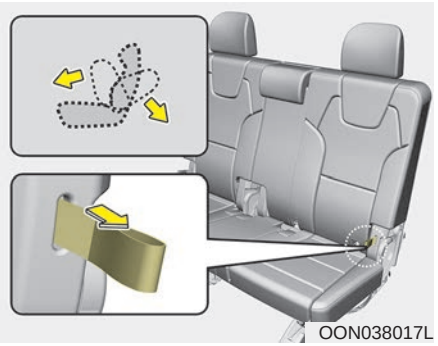
OON038017L

You can adjust the angle of the seat-back by pulling the strap on the left / right side of the 3rd row seat.

After adjusting the angle, raise the headrest to make sure that the passenger's head is not placed above the headrest.

Armrest

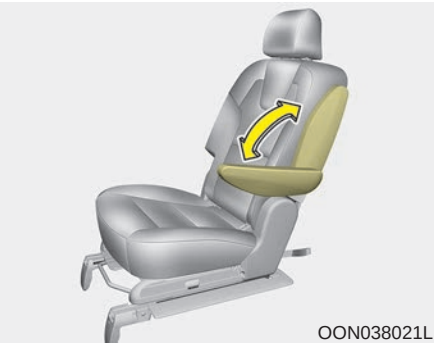
OON038021L

- For 7 seats

The 2nd row seats have the armrest located on the side of seatback.

To use the armrest, swing down the armrest to the lowest position.

Then, adjust the armrest to the desired position while raising it.

When adjusting the position, the operating sound will be heard. This indicates normal operation, not malfunction.

ON ENG 3.qxp 1/8/2019 3:02 PM Page 20

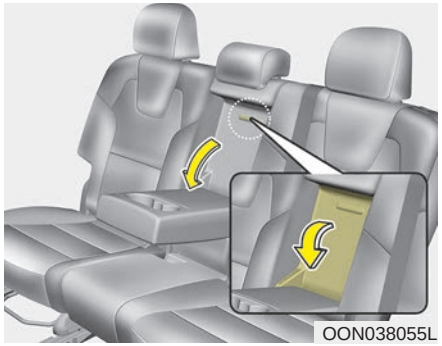

- For 8 seats

To use the armrest, pull it forward from the seatback.

Folding the rear seat

The rear seatbacks can be folded to facilitate carrying long items or to increase the luggage capacity of the vehicle.

⚠ WARNING

The purpose of the fold-down rear seatbacks is to allow you to carry longer objects that could not be accommodated in the cargo area.

Never allow passengers to sit on top of the folded down seatback while the vehicle is moving. This is not a proper seating position and no seat belts are available for use. This could result in serious injury or death in case of an accident or sudden stop. Objects carried on the folded down seatback should not extend higher than the top of the front seatbacks. This could allow cargo to slide forward and cause injury or damage during sudden stops.

⚠ WARNING

When folding the seatback, be sure to hold the seatback or headrest with your hands.

⚠ CAUTION

When folding or unfolding a rear seat, make sure to lower the seat's headrest as much as possible and put the seatback of the seat in front of the rear seat in the upright position.

If there is any interference when folding or unfolding the seat, the interfered area of the seat may be damaged.

ON ENG 3.qxp 1/8/2019 3:02 PM Page 21

To fold down the rear seatback

1. Insert the rear seat belt buckle in the pocket between the rear seat-back and cushion, and insert the rear seat belt webbing in the guide to prevent the seat belt from being damaged.
2. Set the front seatback to the upright position and if necessary, slide the front seat forward.
3. Lower the rear headrests to the lowest position.

⚠ CAUTION

When the seats in the 2nd-row are folded to use the area as a cargo compartment, be sure to turn off the seat heater (if equipped).

■ 2nd row seat

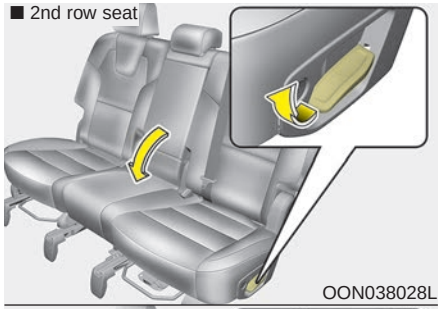

OON038028L



OON038030L

■ 3rd row seat



OON038028L

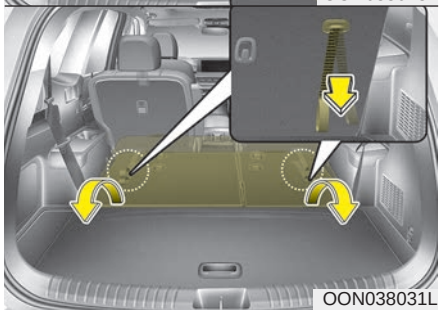

OON038031L

ON ENG 3.qxp 1/8/2019 3:02 PM Page 22

4. Pull on the seatback folding lever (for 2nd row) or strap (for 3rd row), then fold the seat toward the front of the vehicle. When you return the seatback to its upright position, always be sure it has locked into position by pushing on the top of the seatback.
5. To use the rear seat, lift and pull the seatback backward by pulling on the folding lever (for 2nd row) or strap (for 3rd row).

   Pull the seatback firmly until it clicks into place.

   Make sure the seatback is locked in place.
6. Return the rear seat belt to the proper position.

2nd row seat folding



OON038032L

This feature allows you to fold seats in the 2nd row while the tailgate is open.

1. Press the folding switch (1) of the seatback located on the left and right sides of the tailgate.

L: Folding the left seat in the 2nd-row

R: Folding the right seat in the 2nd-row

2. You can use additional space by folding the seatback forward.
3. If the seatback is not fully folded, fold down the seatback again to make it completely folded.

⚠ WARNING - Rear seat folding

Do not fold the rear seats (2nd & 3rd row seats), if passengers, pets or luggage are in the rear seats.

It may cause injury or damage to passengers, pets, luggage.

ON ENG 3.qxp 4/2/2019 11:19 AM Page 23

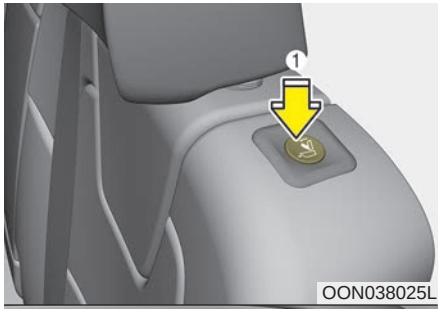

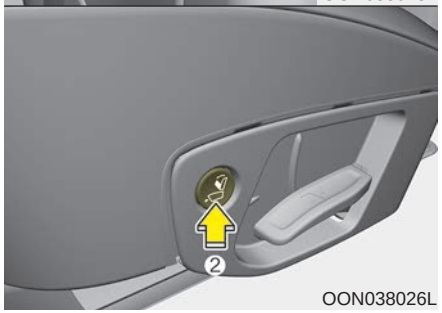

■ 7 seat

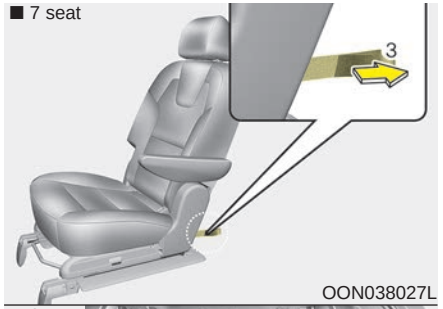

■ 8 seat

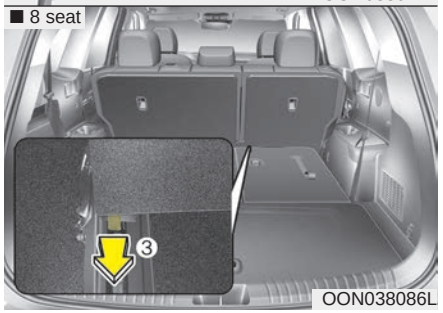

- If the folding switch (1 or 2) in the 2nd row (in the upper part of the 2nd-row seatback or the outer part of the seat) does not work, pull the strap (3) on the bottom left of the seat in the 2nd row. It works just like the folding switch and you can move the seat forward along with the seatback.
- Do not pull the strap (3) when the 2nd-row seat(s) is/are occupied. Sudden movement of the seat(s) may result in injury. Use the strap only when the folding switch in the 2nd row (in the upper part of the second-row seatback or the outer part of the seat) does not work.

This strap (3) is for 3rd row passengers to go out even when the vehicle's power is in run-out emergency condition in an accident.

⚠ WARNING

Never attempt to adjust using the 2nd row seat walk-in switch or strap while the vehicle is moving or seat is occupied as the seat may suddenly move and cause the passenger on the seat to be injured.

ON ENG 3.qxp 1/8/2019 3:02 PM Page 24

⚠ WARNING - Uprighting seat

When you return the seatback to its upright position, hold the seatback and return it slowly. If the seatback is returned without holding it, the back of the seat could spring forward resulting in injury caused by being struck by the seatback.

⚠ CAUTION - Damaging rear seat belt buckles

When you fold the rear (2nd and/or 3rd row) seatback, insert the buckle in the pocket between the rear seatback and cushion. Doing so can prevent the buckle from being damaged by the rear seatback.

⚠ CAUTION - Rear seat belts

When returning the rear (2nd and/or 3rd row) seatbacks to the upright position, remember to return the rear shoulder belts to their proper position. Routing the seat belt webbing through the rear seat belt guides will help keep the belts from being trapped behind or under the seats.

⚠ WARNING - Cargo

Cargo should always be secured to prevent it from being thrown about the vehicle in a collision and causing injury to the vehicle occupants. Do not place objects in the rear (2nd and/or 3rd row) seats, since they cannot be properly secured and may hit the front seat occupants in a collision.

⚠ WARNING - Cargo loading

Make sure the engine is off, the automatic transmission is in P (Park) and the parking brake is securely applied whenever loading or unloading cargo. Failure to take these steps may allow the vehicle to move if the shift lever is inadvertently moved to another position.

ON ENG 3.qxp 1/8/2019 3:03 PM Page 25

Rear seat headrests (2nd, 3rd row rear seat)

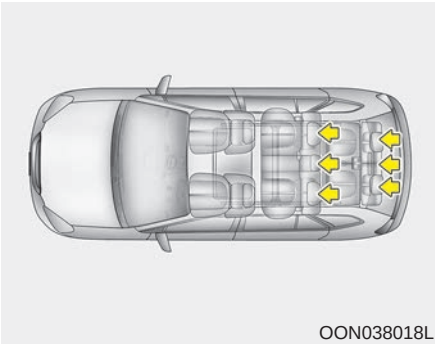

OON038018L

The rear seat(s) is equipped with headrests in all the seating positions for the occupant's safety and comfort.

The headrest not only provides comfort for passengers, but also helps protect the head and neck in the event of a collision.

⚠ WARNING

- **For maximum effectiveness in case of an accident, the headrest should be adjusted so the middle of the headrest is at the same height of the center of gravity of an occupant's head. Generally, the center of gravity of most people's head is similar with the height of the top of their eyes. Also adjust the headrest as close to your head as possible. For this reason, the use of a cushion that holds the body away from the seatback is not recommended.**
- **Do not operate the vehicle with the headrests removed. Severe injury to an occupant may occur in the event of an accident. Headrests may provide protection against severe neck injuries when properly adjusted.**

⚠ CAUTION

When there is no occupant in the rear seats, adjust the height of the headrest to the lowest position. The rear seat headrest can reduce the visibility of the rear area.

ON ENG 3.qxp 1/8/2019 3:03 PM Page 26

Adjusting the height up and down (2nd row seat and 3rd row center seat)

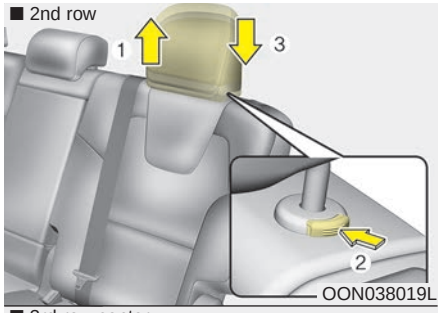

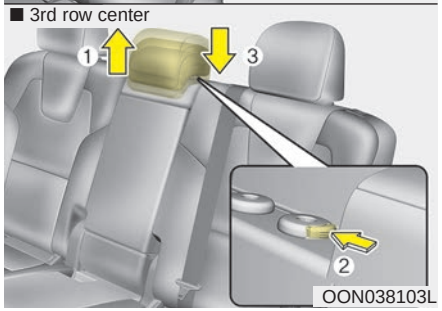

To raise the headrest, pull it up to the desired position (1). To lower the headrest, push and hold the release button (2) on the headrest support and lower the headrest to the desired position (3).

Removal (2nd and 3rd row seat)

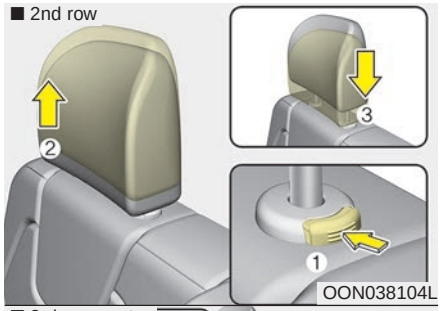

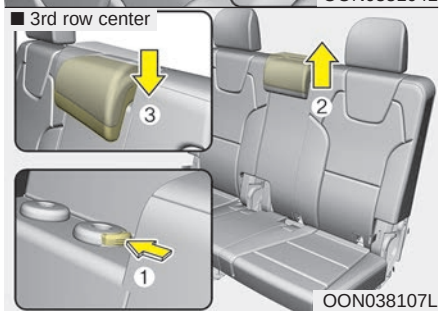

To remove the headrest, raise it as far as it can go then press the release button (1) while pulling the headrest up (2).

ON ENG 3.qxp 1/14/2019 1:53 PM Page 27

To reinstall the headrest, put the headrest poles (3) into the holes while pressing the release button (1). Then adjust it to the appropriate height.

⚠ WARNING

Make sure the headrest locks in position after adjusting it to properly protect the occupants.

3rd row headrest folding (except for center)

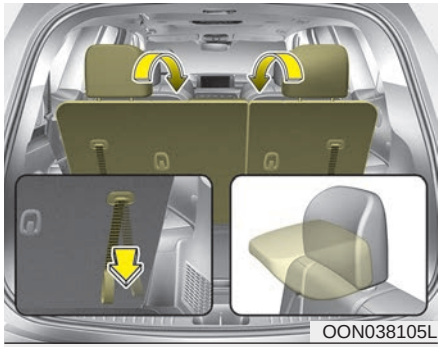
OON038105L

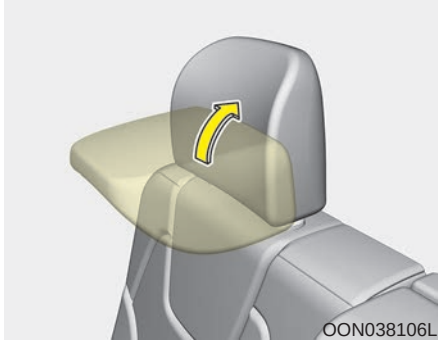
OON038106L

The headrest will fold down automatically when folding the seatback.

To fold the headrest manually :
Pull the strap.

To unfold the headrest :
Raise the headrest manually.

Always be sure the headrest has locked into position after you return the seatback.

ON ENG 3.qxp 1/8/2019 3:03 PM Page 28

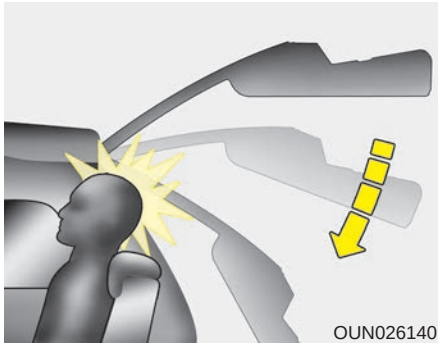
OUN026140

⚠ WARNING

If the tailgate is pushed down to close it when a passenger's head is not against a properly adjusted headrest or a tall person is seated, the tailgate may hit the occupant's head, which could cause injury.

ON ENG 3.qxp 1/8/2019 3:03 PM Page 29

SEAT BELTS

Seat belt restraint system

⚠ WARNING

- For maximum restraint system protection, the seat belts must always be used whenever the vehicle is moving.
- Seat belts are most effective when seatbacks are in the upright position.
- Children age 12 and under must always be properly restrained in the rear seat. Never allow children to ride in the front passenger seat. If a child over 12 must be seated in the front seat, he/she must be properly belted and the seat should be moved as far back as possible.
- Never wear the shoulder belt under your arm or behind your back. An improperly positioned shoulder belt can cause serious injuries in a crash.

(Continued)

(Continued)

The shoulder belt should be positioned midway over your shoulder across your collarbone.

- Never wear a seat belt over fragile objects. If there is a sudden stop or impact, the seat belt can damage it.
- Avoid wearing twisted seat belts. A twisted belt can't do its job well. In a collision, it could even cut into you. Be sure the belt webbing is straight and not twisted.
- Be careful not to damage the belt webbing or hardware. If the belt webbing or hardware is damaged, replace it.

⚠ WARNING

Seat belts are designed to bear upon the bony structure of the body, and should be worn low across the front of the pelvis or the pelvis, chest and shoulders, as applicable; wearing the lap section of the belt across the abdominal area must be avoided.

Seat belts should be adjusted as firmly as possible, consistent with comfort, to provide the protection for which they have been designed.

A slack belt will greatly reduce the protection afforded to the wearer.

(Continued)

ON ENG 3.qxp 1/8/2019 3:03 PM Page 30

(Continued)

Care should be taken to avoid contamination of the webbing with polishes, oils and chemicals, and particularly battery acid. Cleaning may safely be carried out using mild soap and water. The belt should be replaced if webbing becomes frayed, contaminated or damaged. It is essential to replace the entire assembly after it has been worn in a severe impact even if damage to the assembly is not obvious. Belts should not be worn with straps twisted. Each belt assembly must only be used by one occupant; it is dangerous to put a belt around a child being carried on the occupant's lap.

⚠ WARNING

- **No modifications or additions should be made by the user which will either prevent the seat belt adjusting devices from operating to remove slack, or prevent the seat belt assembly from being adjusted to remove slack.**
- **When you fasten the seat belt, be careful not to latch the seat belt in buckles of other seat. It's very dangerous and you may not be protected by the seat belt properly.**
- **Do not unfasten the seat belt and do not fasten and unfasten the seat belt repeatedly while driving. This could result in loss of control, and an accident causing death, serious injury, or property damage.**

(Continued)

(Continued)

- **When fastening the seat belt, make sure that the seat belt does not pass over objects that are hard or can break easily.**
- **Make sure there is nothing in the buckle. The seat belt may not be fastened securely.**

ON ENG 3.qxp 1/8/2019 3:03 PM Page 31

Seat belt warning



Driver's seat belt warning

As a reminder to the driver, the seat belt warning light will illuminate for approximately 6 seconds each time you turn the Engine Start/Stop button to regardless of belt fastening.

If you start to drive without the seatbelt fastened or you unfasten the seat belt when you drive under 20km/h or stop, the corresponding warning light will illuminate.

If you start to drive without the seat belt fastened or you unfasten the seat belt when you drive 20km/h and faster, the warning light will blink and warning chime will sound for approximately 100 seconds.

When the seat belt is unfastened during driving, the warning light will illuminate when the speed is under 20 km/h.

When the speed is 20 km/h and faster, the warning light will blink and warning chime will sound for approximately 100 seconds.

Lap/shoulder belt

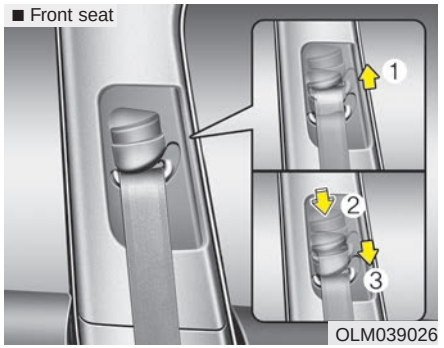

Height adjustment

You can adjust the height of the shoulder belt anchor to one of 4 positions for maximum comfort and safety.

The height of the adjusting seat belt should not be too close to your neck. You will not be getting the most effective protection. The shoulder portion should be adjusted so that it lies across your chest and midway over your shoulder near the door and not your neck.

ON ENG 3.qxp 1/8/2019 3:03 PM Page 32

To adjust the height of the seat belt anchor, lower or raise the height adjuster into an appropriate position.

To raise the height adjuster, pull it up (1). To lower it, push it down (3) while pressing the height adjuster button (2).

Release the button to lock the anchor into position. Try sliding the height adjuster to make sure that it has locked into position.

Improperly positioned seat belts can cause serious injuries in an accident.

⚠ WARNING

- **Verify the shoulder belt anchor is locked into position at the appropriate height. Never position the shoulder belt across your neck or face.**
- **Failure to replace seat belts after an accident could leave you with damaged seat belts that will not provide protection in the event of another collision leading to personal injury or death. Replace your seat belts after being in an accident as soon as possible.**

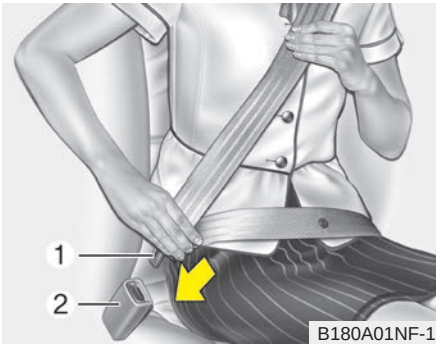

To fasten your seat belt:

To fasten your seat belt, pull it out of the retractor and insert the metal tab (1) into the buckle (2). There will be an audible "click" when the tab locks into the buckle.

The seat belt automatically adjusts to the proper length only after the lap belt portion is adjusted manually so that it fits snugly around your hips. If you lean forward in a slow, easy motion, the belt will extend and let you move around. If there is a sudden stop or impact, however, the belt will lock into position. It will also lock if you try to lean forward too quickly.

✻ NOTICE

If you are not able to pull out the seat belt from the retractor, firmly pull the belt out and release it. Then you will be able to pull the belt out smoothly.

ON ENG 3.qxp 1/8/2019 3:03 PM Page 33

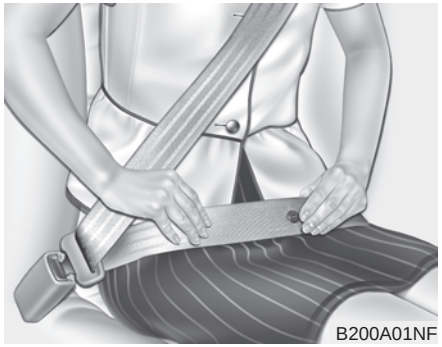
B200A01NF

⚠ WARNING

You should place the lap belt portion as low as possible and snugly across your hips, not on your waist. If the lap belt is located too high on your waist, it may increase the chance of injury in the event of a collision. Both arms should not be under or over the belt. Rather, one should be over and the other under, as shown in the illustration.

Never wear the seat belt under the arm near the door.

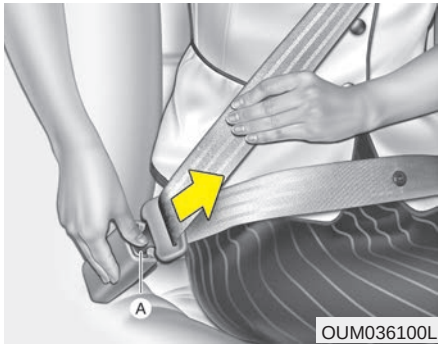

OUM036100L

To release the seat belt:

The seat belt is released by pressing the release button (A) in the locking buckle. When it is released, the belt should automatically draw back into the retractor.

If this does not happen, check the belt to be sure it is not twisted, then try again.

■ 2nd row seat

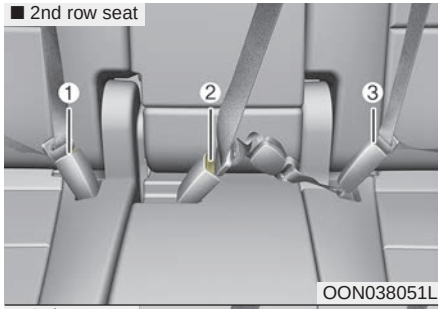

OON038051L

■ 3rd row seat

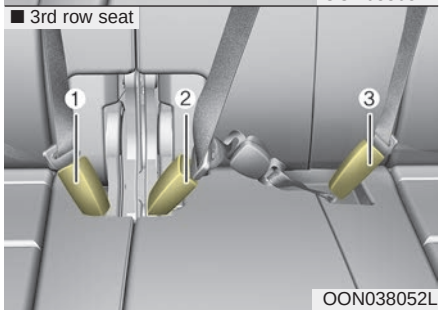

OON038052L

The seat belt should be locked into the buckle on each seat cushion to be properly fastened.

① : Rear right seat belt fastening buckle

② : Rear center seat belt fastening buckle

③ : Rear left seat belt fastening buckle

ON ENG 3.qxp 1/8/2019 3:03 PM Page 34

■ 2nd row seat

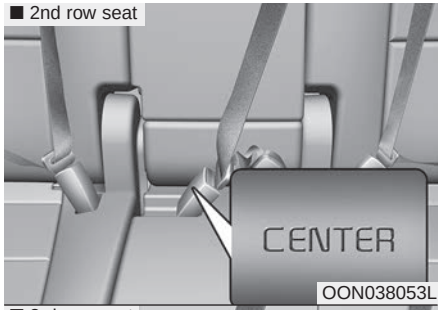

■ 3rd row seat

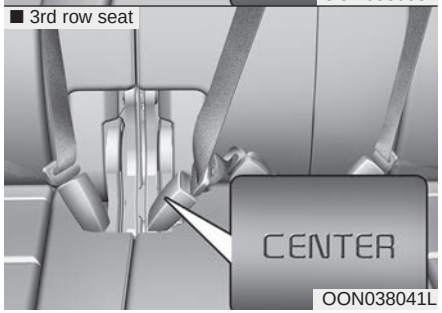

When using the rear center seat belt, the buckle with the “CENTER” mark must be used.

⚠ CAUTION

Do not force to lock the left or right seat belt into the center seat belt buckle.

Make sure to lock the rear ceter seat belt into the center seat belt buckle.

If not, the improperly fastened seat belt will not be able to provide protection.

3 Point rear center belt (for 3rd row center seat)

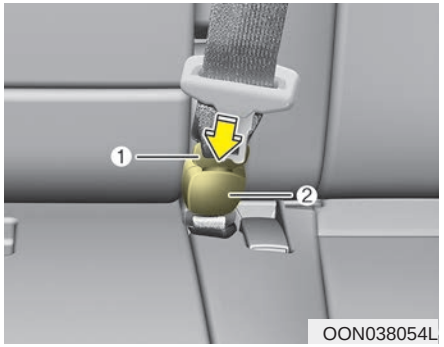

⚠ WARNING - Rear center seat belt

Do not separate mini tongue (1) and mini buckle (2) even if there is not an occupant.

If it is separated, It may hit the rear seat occupants in a collision or sudden stops.

ON ENG 3.qxp 1/8/2019 3:03 PM Page 35

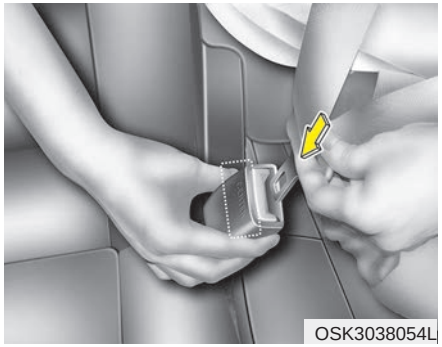
OSK3038054L

Pull the tongue plate and insert the tongue plate into the open end of the buckle until an audible “click” is heard, indicating the latch is locked. Make sure the belt is not twisted.

⚠ CAUTION

When using the rear center seat belt, the buckle with the “CENTER” mark must be used.

There will be an audible “click” when the tab locks in the buckle. The seat belt automatically adjusts to the proper length only after the lap belt is adjusted manually so that it fits snugly around your hips, if you lean forward in a slow, easy motion, the belt will extend and let you move around. If there is a sudden stop or impact, the belt will lock into position. It will also lock if you try to lean forward too quickly.

⚠ WARNING

When using the rear seat center belt, you must lock all tongue plates and buckles. If any tongue plate or buckle is not locked, it will increase the chance of injury in the event of collision.

Pre-tensioner seat belt (if equipped)


OED030300

Your vehicle is equipped with pre-tensioner seatbelts at the front outboard seating positions.

The purpose of the pre-tensioner is to make sure that the seat belts fit tightly against the occupant's body in certain collisions.

The pre-tensioner seat belts may be activated in crashes where the collision is severe enough.

ON ENG 3.qxp 1/8/2019 3:03 PM Page 36

When the vehicle stops suddenly, or if the occupant tries to lean forward too quickly, the seat belt retractor will lock into position. In certain frontal collisions, the pre-tensioner will activate and pull the seat belt into tighter contact against the occupant's body.

If the system senses excessive tension on the driver or passenger's seat belt when the pre-tensioner activates, the load limiter inside the pre-tensioner will release some of the pressure on the affected seat belt. (if equipped)

⚠ WARNING

For your safety, be sure that the belt webbing is not loose or twisted and always sit properly on your seat.

✻ NOTICE

The pre-tensioner will activate not only in a frontal collision but also in a side collision, if the vehicle is equipped with a side or curtain air bag.

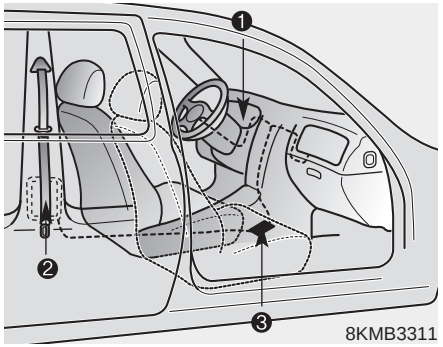

8KMB3311

The seat belt pre-tensioner system consists mainly of the following components. Their locations are shown in the illustration:

1. SRS air bag warning light
2. Retractor pre-tensioner assembly
3. SRS control module

⚠ WARNING

To obtain maximum benefit from a pre-tensioner seat belt:

1. **The seatbelt must be working correctly and adjusted to the proper position. Please read and follow all of the important information and precautions about your vehicle's occupant safety features – including seat belts and air bags – that are provided in this manual.**
2. **Be sure you and your passengers always wear seat belts properly.**

ON ENG 3.qxp 1/8/2019 3:03 PM Page 37

✻ NOTICE

- When the pre-tensioner seat belts are activated, a loud noise may be heard and fine dust, which may appear to be smoke, may be visible in the passenger compartment. These are normal operating conditions and are not hazardous.
- Although it is harmless, the fine dust may cause skin irritation and should not be breathed for prolonged periods. Wash all exposed skin areas thoroughly after an accident in which the pre-tensioner seat belts were activated.
- Because the sensor that activates the SRS air bag is connected with the pre-tensioner seat belt, the SRS air bag warning light on the instrument panel will illuminate for approximately 6 seconds after the Engine Start/Stop button has been turned to the "ON" position, and then it should turn off.

⚠ CAUTION

If the pre-tensioner seat belt is not working properly, the SRS air bag warning light will illuminate even if there is no malfunction of the SRS air bag. If the SRS air bag warning light does not illuminate when the Engine Start/Stop button is turned to ON, or if it remains illuminated after illuminating for approximately 6 seconds, or if it illuminates while the vehicle is being driven, have the system inspected by a professional workshop. Kia recommends to visit an authorized Kia dealer/service partner.

⚠ WARNING

- Pre-tensioners seat belts systems are designed to operate only one time. After activation, pre-tensioner seat belts must be replaced. All seat belts, of any type, should always be replaced after they have been worn during a collision.
- The pre-tensioner seat belt assembly mechanisms become hot during activation. Do not touch the pre-tensioner seat belt assemblies for several minutes after they have been activated.
- Do not attempt to inspect or replace the pre-tensioner seat belts yourself. Have the system inspected by a professional workshop. Kia recommends to visit an authorized Kia dealer/service partner.
- Do not attempt to service or repair the pre-tensioner seat belt system in any manner.

(Continued)

ON ENG 3.qxp 1/8/2019 3:03 PM Page 38

(Continued)

- **Improper handling of the pre-tensioner seat belt assemblies, and failure to heed the warnings not to strike, modify, inspect, replace, service or repair the pre-tensioner seat belt assemblies may lead to improper operation or inadvertent activation and serious injury.**
- **Always wear the seat belts when driving or riding in a motor vehicle.**
- **If the vehicle or pre-tensioner seat belt must be discarded, contact a professional workshop. Kia recommends to visit an authorized Kia dealer/service partner.**
- **Body work on the front area of the vehicle may damage the pre-tensioner seat belt system. Therefore, have the system serviced by a professional workshop. Kia recommends to visit an authorized Kia dealer/service partner.**

Seat belt precautions

⚠ WARNING

All occupants of the vehicle must wear their seat belts at all times. Seat belts and child restraints reduce the risk of serious or fatal injuries for all occupants in the event of a collision or sudden stop. Without a seat belt, occupants could be shifted too close to a deploying air bag, strike the interior structure or be thrown from the vehicle. Properly worn seat belts greatly reduce these hazards.

Always follow the precautions about seat belts, air bags and occupant seating contained in this manual.

Infant or small child

You should be aware of the specific requirements in your country. Child and/or infant seats must be properly placed and installed in the rear seat. For more information about the use of these restraints, refer to “Child restraint system” in this section.

⚠ WARNING

Every person in your vehicle needs to be properly restrained at all times, including infants and children. Never hold a child in your arms or lap when riding in a vehicle. The violent forces created during a crash will tear the child from your arms and throw the child against the interior. Always use a child restraint appropriate for your child's height and weight.

ON ENG 3.qxp 1/8/2019 3:03 PM Page 39

✻ NOTICE

Small children are best protected from injury in an accident when properly restrained in the rear seat by a child restraint system that meets the requirements of the Safety Standards of your country. Before buying any child restraint system, make sure that it has a label certifying that it meets Safety Standards of your country. The restraint must be appropriate for your child's height and weight. Check the label on the child restraint for this information. Refer to "Child restraint system" in this section.

Larger children

Children who are too large for child restraint systems should always occupy the rear seat and use the available lap/shoulder belts. The lap portion should be fastened and snugged on the hips and as low as possible. Check if the belt fits periodically. A child's squirming could put the belt out of position. Children are given the most safety in the event of an accident when they are restrained by a proper restraint system in the rear seat. If a larger child (over age 12) must be seated in the front seat, the child should be securely restrained by the available lap/shoulder belt and the seat should be placed in the rearmost position. Children age 12 and under should be restrained securely in the rear seat. NEVER place a child age 12 and under in the front seat. NEVER place a rear facing child seat in the front seat of a vehicle.

If the shoulder belt portion slightly touches the child's neck or face, try placing the child closer to the center of the vehicle. If the shoulder belt still touches their face or neck they need to be returned to a child restraint system.

⚠ WARNING - Shoulder belts on small children

- **Never allow a shoulder belt to be in contact with a child's neck or face while the vehicle is in motion.**
- **If seat belts are not properly worn and adjusted on children, there is a risk of death or serious injury.**

ON ENG 3.qxp 1/8/2019 3:03 PM Page 40

Pregnant women

The use of a seat belt is recommended for pregnant women to lessen the chance of injury in an accident. When a seat belt is used, the lap belt portion should be placed as low and securely as possible on the hips, not across the abdomen. For specific recommendations, consult a physician.

⚠ WARNING - Pregnant women

Pregnant women must never place the lap portion of the safety belt over the area of the abdomen where the fetus is located or above the abdomen where the belt could crush the fetus during an impact.

Injured person

A seat belt should be used when an injured person is being transported. When this is necessary, you should consult a physician for recommendations.

One person per belt

Two people (including children) should never attempt to use a single seat belt. This could increase the severity of injuries in case of an accident.

Do not lie down

To reduce the chance of injuries in the event of an accident and to achieve maximum effectiveness of the restraint system, all passengers should be sitting up and the front and rear (2nd and/or 3rd row) seats should be in an upright position when the vehicle is moving. A seat belt cannot provide proper protection if the person is lying down in the rear seat or if the front and rear (2nd and/or 3rd row) seats are in a reclined position.

⚠ WARNING

Riding with a reclined seatback increases your chance of serious or fatal injuries in the event of a collision or sudden stop. The protection of your restraint system (seat belts and air bags) is greatly reduced by reclining your seat. Seat belts must be secured against your hips and chest to work properly. The more the seatback is reclined, the greater the chance an occupant's hips will slide under the lap belt causing serious internal injuries. Also, the shoulder belt may strike the occupant's neck. Drivers and passengers should always sit well back in their seats, properly belted, and with the seatbacks upright.

ON ENG 3.qxp 1/8/2019 3:03 PM Page 41

Care of seat belts

Seat belt systems should never be disassembled or modified. In addition, care should be taken to assure that seat belts and belt hardware are not damaged by seat hinges, doors or other abuse.

⚠ WARNING

- **When you return the rear seatback to its upright position after the rear seatback has been folded down, be careful not to damage the seat belt webbing or buckle. Be sure that the webbing or buckle does not get caught or pinched in the rear seat. A seat belt with damaged webbing or buckle could possibly fail during a collision or sudden stop, resulting in serious injury. If the webbing or buckles are damaged, get them replaced immediately.**
- **Seatbelts can become hot in a vehicle that has been closed up in sunny weather.**

  They could burn infants and children.

Periodic inspection

All seat belts should be inspected periodically for wear or damage of any kind. Any damaged parts should be replaced as soon as possible.

Keep belts clean and dry

Seat belts should be kept clean and dry. If belts become dirty, they can be cleaned by using a mild soap solution and warm water. Bleach, dye, strong detergents or abrasives should not be used because they may damage and weaken the fabric.

When to replace seat belts

Entire in-use seat belt assembly or assemblies should be replaced if the vehicle has been involved in an accident. This should be done even if no damage is visible. In this case, have the system replaced by a professional workshop. Kia recommends to consult an authorized Kia dealer/service partner.

ON ENG 3.qxp 1/8/2019 3:03 PM Page 42

CHILD RESTRAINT SYSTEM (CRS)

Our recommendation: Children always in the rear

⚠ WARNING

Always properly restrain children in the vehicle. Children of all ages are safer when riding in the rear seats. Never place a rearward-facing Child Restraint System on the front passenger seat, unless the air bag is deactivated.

Children under age 13 should always ride in the rear seats and must always be properly restrained to minimize the risk of injury in an accident, sudden stop or sudden maneuver.

According to accident statistics, children are safer when properly restrained in the rear seats than in the front seat. Children too large for a Child Restraint System must use the seat belts provided.

Most countries have regulations which require children to travel in approved Child Restraint Systems.

The laws governing the age or height/weight restrictions at which seat belts can be used instead of Child Restraint System differs among countries, so you should be aware of the specific requirements in your country, and where you are travelling.

Child Restraint Systems must be properly installed in the vehicle seat. Always use a commercially available Child Restraint System that meets the requirements of your country.

Child Restraint System (CRS)

Infants and younger children must be restrained in an appropriate rearward-facing or forward-facing CRS that has first been properly secured to the seat of the vehicle. Read and comply with the instructions for installation and use provided by the manufacturer of the Child Restraint System.

⚠ WARNING

- **Always follow the Child Restraint System manufacturer's instructions for installation and use.**
- **Always properly restrain your child in the Child Restraint System.**
- **Do not use an infant carrier or a child safety seat that "hooks" over a seatback, it may not provide adequate protection in an accident.**
- **After an accident, have the system checked by a professional workshop. Kia recommends to visit an authorized Kia dealer/service partner.**

ON ENG 3.qxp 1/8/2019 3:03 PM Page 43

Selecting a Child Restraint System (CRS)

When selecting a Child Restraint System for your child, always:

- Make sure the Child Restraint System has a label certifying that it meets applicable Safety Standards of your country.

  A Child Restraint System may only be installed if it was approved in accordance with the requirements of ECE-R44 or ECE-R129.
- Select a Child Restraint System based on your child's height and weight. The required label or the instructions for use typically provide this information.
- Select a Child Restraint System that fits the vehicle seating position where it will be used.

  For the suitability of Child Restraint Systems on the vehicle's seating positions, please refer to the installation tables.
- Read and comply with the warnings and instructions for installation and use provided with the Child Restraint System.

Child Restraint System types

There are three main types of Child Restraint Systems: rearward-facing, forward-facing and booster Child Restraint Systems.

They are classified according to the child's age, height and weight.

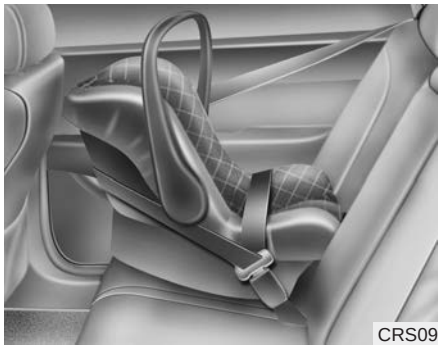
CRS09

Rearward-facing Child Restraint System

A rearward-facing Child Restraint System provides restraint with the seating surface against the back of the child. The harness system holds the child in place, and in an accident, acts to keep the child positioned in the Child Restraint Systems and reduce the stress to the fragile neck and spinal cord.

ON ENG 3.qxp 1/8/2019 3:04 PM Page 44

All children under the age of one year must always ride in a rearward-facing Child Restraint System. There are different types of rearward-facing Child Restraint Systems: infant-only Child Restraint Systems can only be used rearward-facing. Convertible and 3-in-1 Child Restraint Systems typically have higher height and weight limits for the rearward-facing position, allowing you to keep your child rearward-facing for a longer period of time.

Keep using Child Restraint Systems in the rearward-facing position as long as children fit within the height and weight limits allowed by the Child Restraint System's manufacturer.


OON038056L

Forward-facing Child Restraint System

A forward-facing Child Restraint System provides restraint for the child's body with a harness. Keep children in a forward-facing Child Restraint System with a harness until they reach the top height or weight limit allowed by your Child Restraint System's manufacturer.

Once your child outgrows the forward-facing Child Restraint System, your child is ready for a booster seat.

Booster seats

A booster seat is a Child Restraint System designed to improve the fit of the vehicle's seat belt system. A booster seat positions the seat belt so that it fits properly over the stronger parts of your child's body. Keep your children in booster seats until they are big enough to fit in a seat belt properly.

For a seat belt to fit properly, the lap belt must lie comfortable across the upper thighs, not the stomach. The shoulder belt should lie comfortable across the shoulder and chest and not across the neck or face. Children under age 13 must always be properly restrained to minimize the risk of injury in an accident, sudden stop or sudden maneuver.

ON ENG 3.qxp 1/8/2019 3:04 PM Page 45

Installing a Child Restraint System (CRS)

⚠ WARNING

Before installing your Child Restraint System always:

Read and follow the instructions provided by the manufacturer of the Child Restraint System.

Failure to follow all warnings and instructions could increase the risk of the SERIOUS INJURY or DEATH if an accident occurs.

⚠ WARNING

If the vehicle headrest prevents proper installation of a Child Restraint System, the headrest of the respective seating position shall be readjusted or entirely removed.

After selecting a proper Child Restraint System for your child and checking that the Child Restraint System fits properly on the seating position, there are three general steps for a proper installation:

- **Properly secure the Child Restraint System to the vehicle.** All Child Restraint Systems must be secured to the vehicle with the lap belt or lap part of a lap/shoulder belt or with the ISOFIX top-tether and/or ISOFIX anchorage and/or with the support leg.
- **Make sure the Child Restraint System is firmly secured.** After installing a Child Restraint System to the vehicle, push and pull the seat forward and from side-to-side to verify that it is securely attached to the seat. A Child Restraint System secured with a seat belt should be installed as firmly as possible. However, some side-to-side movement can be expected.

  When installing a Child Restraint System, adjust the vehicle seat and seatback (up and down, forward and rearward) so that your child fits in the Child Restraint System in a confortable manner.
- **Secure the child in the Child Restraint System.** Make sure the child is properly strapped in the Child Restraint System according to the Child Restraint System manufacturer's instructions.

⚠ CAUTION

A Child Restraint System in a closed vehicle can become very hot. To prevent burns, check the seating surface and buckles before placing your child in the Child Restraint System.

ON ENG 3.qxp 1/8/2019 3:04 PM Page 46

ISOFIX anchorage and top-tether anchorage (ISOFIX anchorage system) for children

The ISOFIX system holds a Child Restraint System during driving and in an accident. This system is designed to make installation of the Child Restraint System easier and reduce the possibility of improperly installing your Child Restraint System. The ISOFIX system uses anchors in the vehicle and attachments on the Child Restraint System. The ISOFIX system eliminates the need to use seat belts to secure the Child Restraint System to the rear seats.

ISOFIX anchorages are metal bars built into the vehicle. There are two lower anchors for each ISOFIX seating position that will accommodate a Child Restraint System with lower attachments.

To use the ISOFIX system in your vehicle, you must have a Child Restraint System with ISOFIX attachments.

The Child Restraint System manufacturer will provide you with instructions on how to use the Child Restraint System with its attachments for the ISOFIX anchorages.

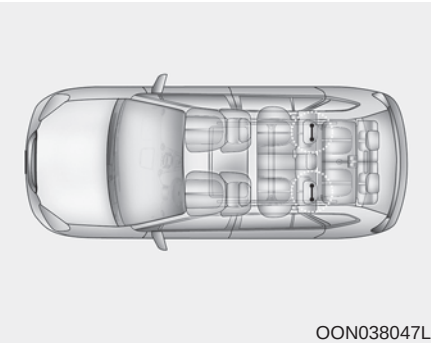

OON038047L

ISOFIX anchorages have been provided in the left and right outboard rear seating positions. Their locations are shown in the illustration.

⚠ WARNING

Do not attempt to install a Child Restraint System using ISOFIX anchorages in the rear center seating position. There are no ISOFIX anchorages provided for this seat. Using the outboard seat anchorages, for the CRS installation on the rear center seating position, can damage the anchorages.

ON ENG 3.qxp 1/8/2019 3:04 PM Page 47

■ 7 seats

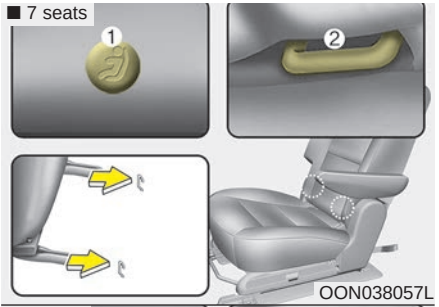

■ 8 seats

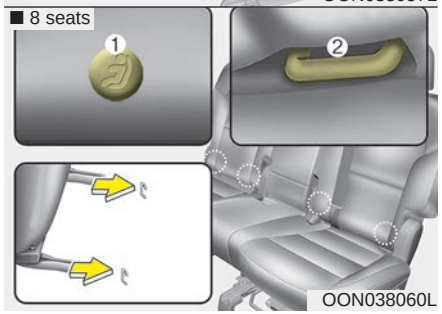

ISOFIX anchorages are located between the seatback and the seat cushion of the rear seat left and right outboard seating positions, indicated by the symbols.

❊ (1) : ISOFIX Anchor Position Indicator

(2) : ISOFIX Anchor

Securing a Child Restraint System with the "ISOFIX Anchorage System"

To install a ISOFIX-compatible Child Restraint System in either of the rear outboard seating positions:

1. Move the seat belt buckle away from the ISOFIX anchorages.
2. Move any other objects away from the anchorages that could prevent a secure connection between the Child Restraint System and the ISOFIX anchorages.
3. Place the Child Restraint System on the vehicle seat, then attach the seat to the ISOFIX anchorages according to the instructions provided by the Child Restraint System manufacturer.
4. Follow the instructions of the Child Restraint System's manufacturer for proper installation and connection of the ISOFIX attachments on the Child Restraint System to the ISOFIX anchorages.

⚠ WARNING

Take the following precautions when using the ISOFIX system:

- **Read and follow all installation instructions provided with your Child Restraint System.**
- **To prevent the child from reaching and taking hold of unretracted seat belts, buckle all unused rear seat belts and retract the seat belt webbing behind the child. Children can be strangled if a shoulder belt becomes wrapped around their neck and the seat belt tightens.**
- **NEVER attach more than one Child Restraint System to a single anchorage. This could cause the anchor or attachment to come loose or break.**

(Continued)

ON ENG 3.qxp 1/8/2019 3:04 PM Page 48

(Continued)

- **Always have the ISOFIX(i-Size) system inspected by your dealer after an accident. An accident can damage the ISOFIX(i-Size) system and may not properly secure the Child Restraint System.**

Securing a Child Restraint System seat with "Top-tether Anchorage" system

■ 7 seats



OON038059L

■ 8 seats

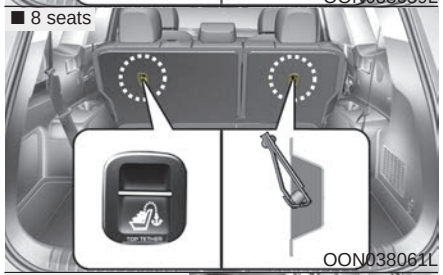

OON038061L

■ 3rd row for Mexico



OON038102L

Child restraint system top tether anchorages are located on the back of the rear seatbacks.

ON ENG 3.qxp 1/8/2019 3:04 PM Page 49

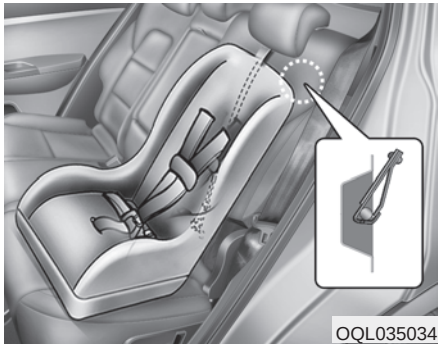

1. Route the Child Restraint System top-tether strap over the seatback. Placing the top tether strap, please follow the instructions of the Child Restraint System manufacturer.
2. Connect the top-tether strap to the top-tether anchorage, then tighten the top-tether strap according to the instructions of your Child Restraint System's manufacturer to firmly attach the Child Restraint System to the seat.

⚠ WARNING

Take the following precautions when installing the top-tether:

- **Read and follow all installation instructions provided with your Child Restraint System.**
- **NEVER attach more than one Child Restraint System to a single ISOFIX top-tether anchorage. This could cause the anchorage or attachment to come loose or break.**
- **Do not attach the top-tether to anything other than the correct top-tether anchorage. It may not work properly if attached to something else.**

(Continued)

(Continued)

- **Child Restraint System anchorages are designed to withstand only those loads imposed by correctly fitted Child Restraint System.**

  Under no circumstances are they to be used for adult seat belts or harnesses or for attaching other items or equipment to the vehicle.

Securing a Child Restraint System with a lap/shoulder belt

When not using the ISOFIX system, all Child Restraint Systems must be secured to a rear seat with the lap part of a lap/shoulder belt.

ON ENG 3.qxp 1/8/2019 3:04 PM Page 50

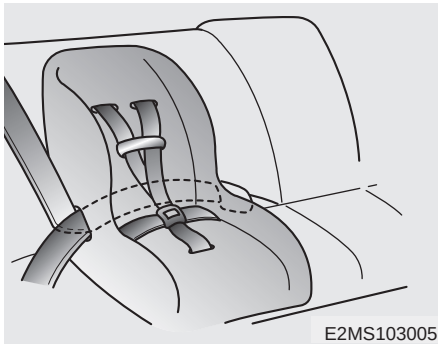
E2MS103005

Installing a Child Restraint System with a lap/shoulder belt

To install a Child Restraint System on the rear seats, do the following:

1. Place the Child Restraint System on a rear seat and route the lap/shoulder belt around or through the Child Restraint System, following the Child Restraint System manufacturer's instructions.

   Make sure the seat belt webbing is not twisted.

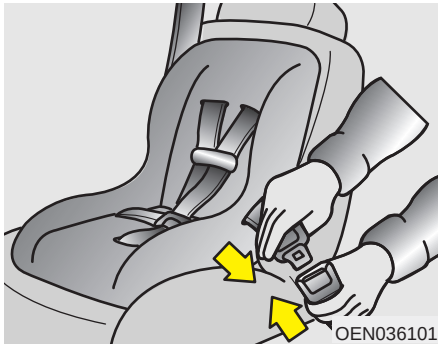
OEN036101

2. Fasten the lap/shoulder belt latch into the buckle. Listen for the distinct "click" sound. Position the release button so that it is easy to access in case of an emergency.

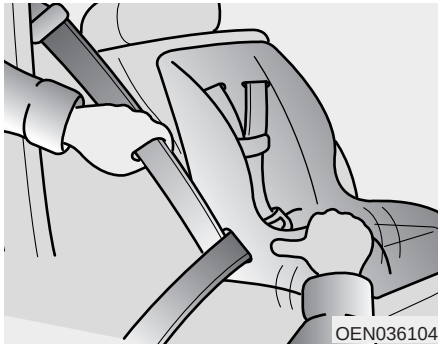
OEN036104

3. Remove as much slack from the belt as possible by pushing down on the Child Restraint System while feeding the shoulder belt back into the retractor.
4. Push and pull on the Child Restraint System to confirm that the seat belt is holding it firmly in place.

If your Child Restraint System manufacturer recommends the use of a top-tether with the lap/shoulder belt.

To remove the Child Restraint System, press the release button on the buckle and then pull the lap/shoulder belt out of the Child Restraint System and allow the seat belt to retract fully.

ON ENG 3.qxp 1/8/2019 3:04 PM Page 51

Suitability of each seating position for belted & ISOFIX Child Restraint Systems (CRS)according to UN regulations

(Information for use by vehicle users and CRS manufacturers)

- Yes : Suitable for fitment of the designated category of CRS
- No : Not suitable for fitment of the designated category of CRS
- "-" : Not applicable
- The table is based on LHD vehicle. Except for the front passenger seat, the table is valid for RHD vehicle. For RHD vehicle front passenger seat, please use information for the seating position number 3.
- If your car is for seven seater, seating position number 5 is not available

CRS categories		Seating positions								Remarks
		1	2	3	4	5	6	7	8	
Universal belted CRS		-	No	Yes (F, R)	Yes (F, R)	Yes (F, R)	Yes (F, R)	Yes (F, R)	Yes (F, R)	F : Forward facing R : Rearward facing
i-size CRS	ISOFIX CRF : F2, F2X, R1, R2	-	No	No	No	No	No	No	No	
Carry-cot (ISOFIX lateral facing CRS)	ISOFIX CRF: L1, L2	-	No	No	No	No	No	No	No	
SOFIX infant* CRS (* : ISOFIX baby CRS)	SOFIX CRF : R1	-	No	Yes (R)	No	Yes (R)	No	No	No	
ISOFIX toddler CRS - small	ISOFIX CRF : F2,F2X, R2,R2X	-	No	Yes (F, R)	No	Yes (F, R)	No	No	No	
ISOFIX toddler CRS - large* (* : not booster seats)	ISOFIX CRF : F3, R3	-	No	Yes (F, R)	No	Yes (F, R)	No	No	No	
Booster Seat - reduced Width	ISO CRF : B2	-	No	Yes	No	Yes	No	No	No	
Booster Seat - full Width	ISO CRF : B3	-	No	Yes	No	Yes	No	No	No	

ON ENG 3.qxp 1/8/2019 3:04 PM Page 52

- Never place a rearward facing Child Restraint System on the front passenger seat
- To install CRS at 3rd row and 2nd row should be moved forward.



OON038088L

Seat number	Position in the vehicle
1	Front left
2	Front right
3	2nd row left
4	2nd row center
5	2nd row right
6	3nd row left
7	3nd row center
8	3nd row right

ON ENG 3.qxp 1/8/2019 3:04 PM Page 53

AIR BAG - SUPPLEMENTAL RESTRAINT SYSTEM (IF EQUIPPED

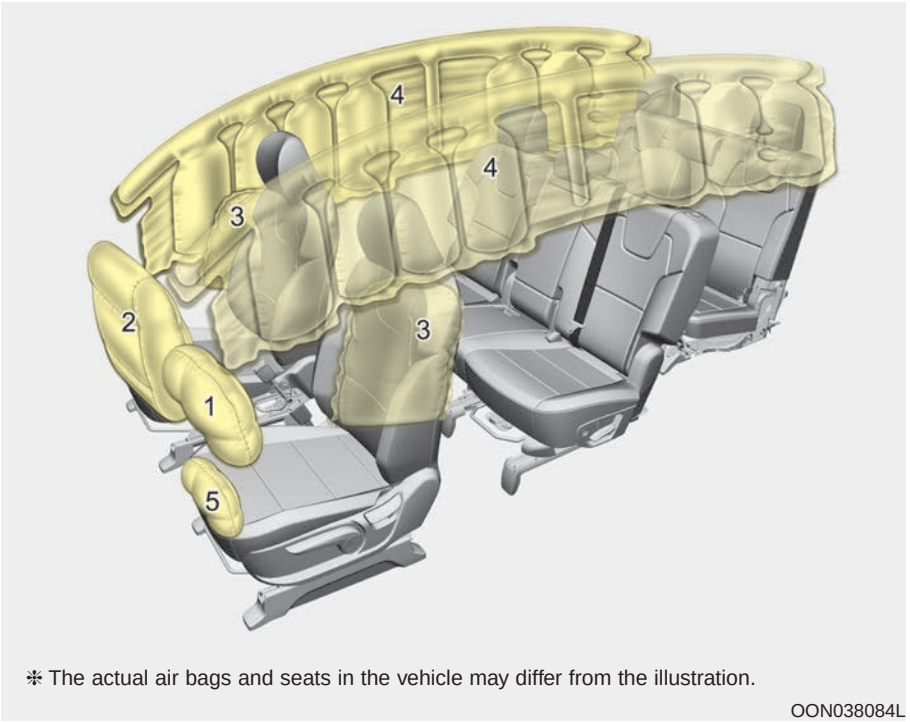

❈ The actual air bags and seats in the vehicle may differ from the illustration.

OON038084L

(1) Driver's front air bag
(2) Passenger's front air bag
(3) Side air bag*
(4) Curtain air bag*
(5) Driver`s knee air bag*

* : if equipped

⚠ WARNING

- **Even in vehicles with air bags, you and your passengers must always wear the safety belts provided in order to minimize the risk and severity of injury in the event of a collision or in most rollover situations.**
- **SRS and pretensioners contain explosive chemicals.**

  If scraping a vehicle without removing SRS and pretensioners from a vehicle, it may cause fire. Before scraping a vehicle, contact a professional workshop. Kia recommends to visit an authorized Kia dealer/service partner.
- **Keep the SRS parts and wirings away from water or any liquid. If the SRS components are inoperative due to exposure to water or liquids, it may cause fire or severe injury.**

ON ENG 3.qxp 1/8/2019 3:04 PM Page 54

How does the air bag system operate

- Air bags are activated (able to inflate if necessary) only when the Engine START/STOP button is turned to the ON or START position.
- Air bags inflate instantly in the event of serious frontal or side collision (if equipped with side air bag or curtain air bag) in order to help protect the occupants from serious physical injury.
- There is no single speed at which the air bags will inflate.

  Generally, air bags are designed to inflate based upon the severity of a collision and its direction. These two factors determine whether the sensors produce an electronic deployment/ inflation signal.
- Air bag deployment depends on a number of factors including vehicle speed, angles of impact and the density and stiffness of the vehicles or objects which your vehicle hits in the collision. The determining, factors are not limited to those mentioned above.
- The front air bags will completely inflate and deflate in an instant.

  It is virtually impossible for you to see the air bags inflate during an accident. It is much more likely that you will simply see the deflated air bags hanging out of their storage compartments after the collision.
- In order to help provide protection in a severe collision, the air bags must inflate rapidly. The speed of air bag inflation is a consequence of extremely short time in which a collision occurs and the need to get the air bag between the occupant and the vehicle structures before the occupant impacts those structures. This speed of inflation reduces the risk of serious or life-threatening injuries in a severe collision and is thus a necessary part of air bag design.

  However, air bag inflation can also cause injuries which can include facial abrasions, bruises and broken bones because the inflation speed also causes the air bags to expand with a great deal of force.
- **There are even circumstances under which contact with the steering wheel air bag can cause fatal injuries, especially if the occupant is positioned excessively close to the steering wheel.**
- In addition to inflating in serious side collisions, side and/or curtain air bags will inflate if the sensing system detects a rollover. (if equipped with rollover senor)
- When a rollover is detected, side and/or curtain air bags will remain inflated longer to help provide protection from ejection, especially when used in conjunction with the seat belts. (if equipped with rollover senor)

ON ENG 3.qxp 1/8/2019 3:04 PM Page 55

⚠ WARNING

- **To avoid severe personal injury or death caused by deploying air bags in a collision, the driver should sit as far back from the steering wheel air bag. The front passenger should always move their seat as far back as possible and sit back in their seat.**
- **Air bag inflates instantly in an event of a collision, passengers may be injured by the air bag expansion force if they are not in a proper position.**
- **Air bag inflation may cause injuries including facial or bodily abrasions, injuries from broken glasses or burns.**

Noise and smoke

When the air bags inflate, they make a loud noise and they leave smoke and powder in the air inside of the vehicle. This is normal and is a result of the ignition of the air bag inflator. After the air bag inflates, you may feel substantial discomfort in breathing due to the contact of your chest with both the seat belt and the air bag, as well as from breathing the smoke and powder. **Open your doors and/or windows as soon as possible after impact in order to reduce discomfort and prevent prolonged exposure to the smoke and powder.**

Though smoke and powder are non-toxic, it may cause irritation to the skin (eyes, nose and throat, etc.). If this is the case, wash and rinse with cold water immediately and consult the doctor if the symptom persists.

⚠ WARNING

- **When the air bags deploy, the air bag related parts in the steering wheel and/or instrument panel and/or in both sides of the roof rails above the front and rear doors are very hot. To prevent injury, do not touch the air bag storage areas internal components immediately after an air bag has inflated.**
- **Do not install or place any accessories near air bag deployment areas, such as the instrument panel, windows, pillars, and roof rails.**

ON ENG 3.qxp 1/8/2019 3:04 PM Page 56

Front passenger's air bag warning label for child restraint system

■ Type A



OYDESA2042

■ Type B

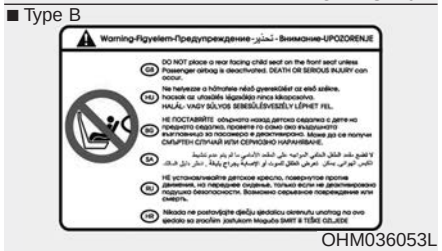

OHM036053L

⚠ WARNING

Never place a rear facing child restraint in the front passenger seat, unless the passenger-side air bag is deactivated. An inflating passenger-side air bag could impact the rear-facing child restraint and kill the child.

In addition, we recommend that you do not place front-facing child restraints in the front passenger's seat either. If the front passenger air bag inflates, it could cause serious or fatal injuries to the child.

⚠ WARNING

- **NEVER use a rearward facing child restraint on a seat protected by an ACTIVE AIR BAG in front of it, DEATH or SERIOUS INJURY to the CHILD can occur.**
- **When children are seated in the rear outboard seats of a vehicle equipped with side and/or curtain air bags, be sure to install the child restraint system as far away from the door side as possible, and securely lock the child restraint system in position.**

  Inflation of side and/or curtain air bags could cause serious injury or death to an infant or child.

ON ENG 3.qxp 1/8/2019 3:04 PM Page 57

Air bag warning and indicator

Air bag warning light



W7-147

The purpose of the air bag warning light in your instrument panel is to alert you of a potential problem with your air bag - Supplemental Restraint System (SRS).

When the Engine Start/Stop button is turned ON, the warning light should illuminate for approximately 6 seconds, then go off.

Have the system checked if:

- The light does not turn on briefly when you turn the Engine Start/Stop button ON.
- The light stays on after illuminating for approximately 6 seconds.
- The light comes on while the vehicle is in motion.
- The light blinks when the Engine Start/Stop button is in ON position.

SRS components and functions

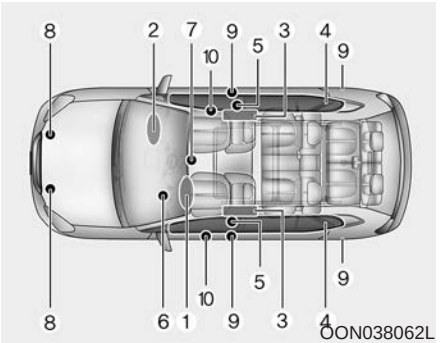

OON038062L

The SRS consists of the following components:

1. Driver's front air bag module
2. Passenger's front air bag module*
3. Side air bag modules*
4. Curtain air bag modules*
5. Retractor pre-tensioner assemblies
6. Air bag warning light
7. SRS control module (SRSCM) / Rollover sensor*

ON ENG 3.qxp 1/8/2019 3:04 PM Page 58

8. Front impact sensors
9. Side impact sensors*
10. Side pressure impact sensors*

* : if equipped

The SRSCM continually monitors all elements while the Engine Start/Stop button is ON to determine if a frontal, near-frontal impact or side impact is severe enough to require air bag deployment or pre-tensioner seat belt deployment.

The SRS air bag warning light on the instrument panel will illuminate for about 6 seconds after the Engine Start/Stop button is turned to the ON position, after which the air bag warning light should go out.

⚠ WARNING

If any of the following conditions occurs, this indicates a malfunction of the SRS. In this case, have the system inspected by a professional workshop. Kia recommends to visit an authorized Kia dealer/service partner.

- **The light does not turn on briefly when you turn the ignition ON.**
- **The light stays on after illuminating for approximately 6 seconds.**
- **The light comes on while the vehicle is in motion.**
- **The light blinks when the ignition switch is in ON position.**

Driver's front air bag (1)



The air bag modules are located both in the center of the steering wheel and in the front passenger's panel above the glove box. When the SRSCM detects a sufficiently severe impact to the front of the vehicle, it will automatically deploy the front air bags.

ON ENG 3.qxp 1/8/2019 3:04 PM Page 59

Driver's front air bag (2)

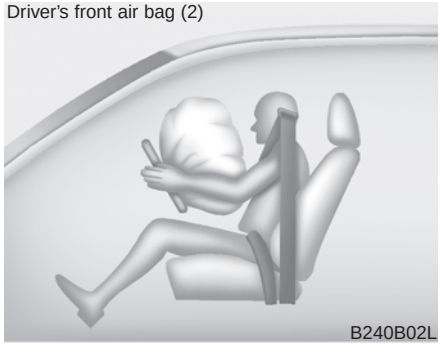

B240B02L

Upon deployment, tear seams molded directly into the pad covers will separate under pressure from the expansion of the air bags. Further opening of the covers then allows full inflation of the air bags.

Driver's front air bag (3)

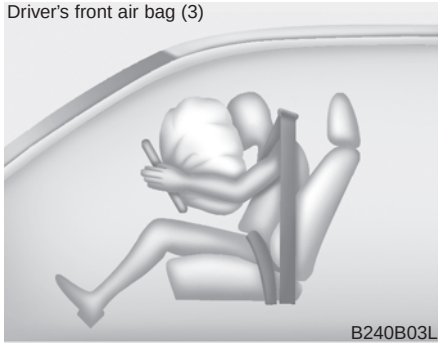

B240B03L

A fully inflated air bag, in combination with a properly worn seat belt, slows the driver's or the passenger's forward motion, reducing the risk of head and chest injury.

After complete inflation, the air bag immediately starts deflating, enabling the driver to maintain forward visibility and the ability to steer or operate other controls.

Passenger's front air bag

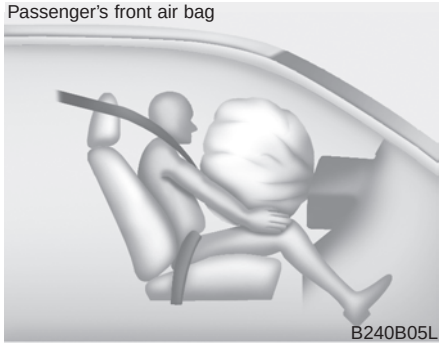

B240B05L

⚠ WARNING

- **Do not install or place any accessories (drink holder, CD holder, sticker, etc.) on the front passenger's panel above the glove box in a vehicle with a passenger's air bag. Such objects may become dangerous projectiles and cause injury if the passenger's air bag inflates.**

(Continued)

ON ENG 3.qxp 1/8/2019 3:04 PM Page 60

(Continued)

- When installing a container of liquid air freshener inside the vehicle, do not place it near the instrument cluster nor on the instrument panel surface.

  It may become dangerous projectiles and cause injury if the passenger's air bag inflates.

⚠ WARNING

- If an air bag deploys, there may be a loud noise followed by a fine dust released in the vehicle. These conditions are normal and are not hazardous - the air bags are packed in this fine powder. The dust generated during air bag deployment may cause skin or eye irritation as well as aggravate asthma for some persons. Always wash all exposed skin areas thoroughly with cold water and a mild soap after an accident in which the air bags were deployed.
- The SRS can function only when the Engine Start/Stop button is in the ON position.

(Continued)

(Continued)

If the SRS air bag warning light does not illuminate, or continuously remains on after illuminating for about 6 seconds when the Engine Start/Stop button is turned to the ON position, or after the engine is started, comes on while driving, the SRS is not working properly.

In this case, have the system inspected by a professional workshop. Kia recommends to visit an authorized Kia dealer/service partner.

- Before you replace a fuse or disconnect a battery terminal, turn off the Engine Start/stop button. Never remove or replace the air bag related fuse(s) when the Engine Start/Stop button is in the ON position. Failure to heed this warning will cause the SRS air bag warning light to illuminate.

ON ENG 3.qxp 1/8/2019 3:04 PM Page 61

Driver's and passenger's front air bag

■ Driver's front air bag



OON038063L

■ Driver's knee air bag

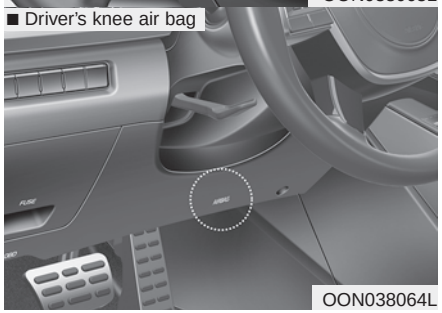

OON038064L

■ Passenger's front air bag

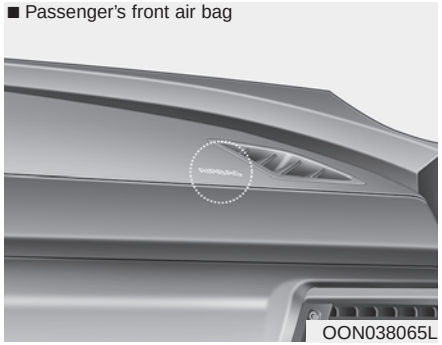

OON038065L

Your vehicle is equipped with a Supplemental Restraint (Air Bag) System and lap/shoulder belts at both the driver and passenger seating positions.

The indications of the system's presence are the letters "AIR BAG" intagliated on the air bag pad cover in the steering wheel and the passenger's side front panel pad above the glove box.

The SRS consists of air bags installed under the pad covers in the center of the steering wheel and the passenger's side front panel above the glove box.

The purpose of the SRS is to provide the vehicle's driver and/or the front passenger with additional protection than that offered by the seat belt system alone in case of a frontal impact of sufficient severity.

ON ENG 3.qxp 1/8/2019 3:04 PM Page 62

⚠ WARNING

The driver's hands should be placed on the steering wheel at the 9:00 and 3:00 positions. The passenger's arms and hands should be placed on their laps.

⚠ WARNING

Always use seat belts and child restraints – every trip, every time, everyone! Air bags inflate with considerable force and in the blink of an eye. Seat belts help keep occupants in proper position to obtain maximum benefit from the air bag. Even with air bags, improperly and unbelted occupants can be severely injured when the air bag inflates. Always follow the precautions about seat belts, air bags and occupant safety contained in this manual.

To reduce the chance of serious or fatal injuries and receive the maximum safety benefit from your restraint system:

(Continued)

(Continued)

- **Never place a child in any child or booster seat in the front seat.**
- **ABC – Always Buckle Children in the back seat. It is the safest place for children of any age to ride.**
- **Front and side air bags can injure occupants improperly positioned in the front seats.**
- **Move your seat as far back as practical from the front air bags, while still maintaining control of the vehicle.**
- **You and your passengers should never sit or lean unnecessarily close to the air bags. Improperly positioned drivers and passengers can be severely injured by inflating air bags.**

(Continued)

ON ENG 3.qxp 1/8/2019 3:04 PM Page 63

(Continued)

- **Never lean against the door or center console – always sit in an upright position.**
- **No objects should be placed over or near the air bag modules on the steering wheel, instrument panel, and the front passenger's panel above the glove box, because any such object could cause harm if the vehicle is in a crash severe enough to cause the air bags to deploy.**
- **Do not tamper with or disconnect SRS wiring or other components of the SRS system. Doing so could result in injury, due to accidental deployment of the air bags or by rendering the SRS inoperative.**

(Continued)

(Continued)

- **If the SRS air bag warning light remains illuminated while the vehicle is being driven, have the system inspected by a professional workshop. Kia recommends to visit an authorized Kia dealer/service partner.**
- **Air bags can only be used once - have the system replaced by a professional workshop.**

  Kia recommends to visit an authorized Kia dealer/service partner.
- **The SRS is designed to deploy the front air bags only when an impact is sufficiently severe and when the impact angle is less than 30° from the forward longitudinal axis of the vehicle. Additionally, the air bags will only deploy once. Seat belts must be worn at all times.**

(Continued)

(Continued)

- **Front air bags are not intended to deploy in side-impact, rear-impact or rollover crashes. In addition, front air bags will not deploy in frontal crashes below the deployment threshold.**
- **A child restraint system must never be placed in the front seat. The infant or child could be severely injured or killed by an air bag deployment in case of an accident.**
- **Children age 12 and under must always be properly restrained in the rear seat. Never allow children to ride in the front passenger seat. If a child over 12 must be seated in the front seat, he or she must be properly belted and the seat should be moved as far back as possible.**

(Continued)

ON ENG 3.qxp 1/8/2019 3:04 PM Page 64

(Continued)

- **For maximum safety protection in all types of crashes, all occupants including the driver should always wear their seat belts whether or not an air bag is also provided at their seating position to minimize the risk of severe injury or death in the event of a crash. Do not sit or lean unnecessarily close to the air bag while the vehicle is in motion.**
- **Sitting improperly or out of position can result in serious or fatal injury in a crash. All occupants should sit upright with the seat back in an upright position, centered on the seat cushion with their seat belt on, legs comfortably extended and their feet on the floor until the vehicle is parked and the Engine Start/Stop button is in OFF position.**

(Continued)

(Continued)

- **The SRS air bag system must deploy very rapidly to provide protection in a crash. If an occupant is out of position because of not wearing a seat belt, the air bag may forcefully contact the occupant causing serious or fatal injuries.**

⚠ WARNING - No attaching objects

No objects (such as crash pad cover, cellular phone holder, cup holder, perfume or stickers) should be placed over or near the air bag modules on the steering wheel, instrument panel, windshield glass, and the front passenger's panel above the glove box. Such objects could cause harm if the vehicle is in a crash severe enough to cause the air bags to deploy. Do not place any objects over the air bag or between the air bag and yourself.

ON ENG 3.qxp 1/8/2019 3:04 PM Page 65

Side air bag (if equipped)

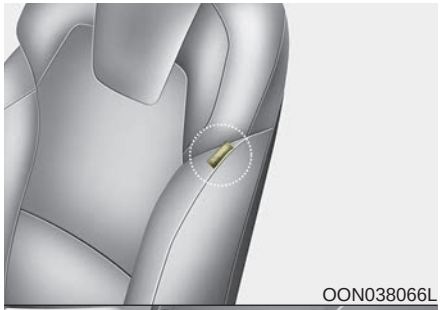

❊ The actual air bags in the vehicle may differ from the illustration.

Your vehicle is equipped with a side air bag in each front seat.

The purpose of the air bag is to provide the vehicle's driver and/or the front passenger with additional protection than that offered by the seat belt alone.

The side air bags are designed to deploy only during certain side-impact collisions, depending on the crash severity, angle, speed and point of impact. The side air bags are not designed to deploy in all side impact situations.

The side and/or curtain air bags on both sides of the vehicle will deploy if a rollover or possible rollover is detected. (if equipped with rollover senor)

The side air bags are not designed to deploy in all side impact or rollover situations. (if equipped with rollover senor)

⚠ WARNING

Do not allow the passengers to lean their heads or bodies onto doors, put their arms on the doors, stretch their arms out of the window, or place objects between the doors and passengers when they are seated on seats equipped with side and/or curtain air bags.

ON ENG 3.qxp 1/8/2019 3:04 PM Page 66

⚠ WARNING

- **The side air bag is supplemental to the driver's and the passenger's seat belt systems and is not a substitute for them. Therefore your seat belts must be worn at all times while the vehicle is in motion. The air bags deploy only in certain side impact conditions severe enough to cause significant injury to the vehicle occupants.**
- **For best protection from the side air bag system and to avoid being injured by the deploying side air bag, both front seat occupants should sit in an upright position with the seat belt properly fastened.**
- **Do not use any accessory seat covers.**
- **Use of seat covers could reduce or prevent the effectiveness of the system.**

(Continued)

(Continued)

- **To prevent unexpected deployment of the side air bag that may result in personal injury, avoid impact to the side impact sensor when the ignition key is on.**
- **If the seat or seat cover is damaged, have the system serviced by a professional workshop.**

  Kia recommends to visit an authorized Kia dealer/service partner.

⚠ WARNING - No attaching objects

- **Do not place any objects over the air bag or between the air bag and yourself. Also, do not attach any objects around the area the air bag inflates such as the door, side door glass, front and rear pillar.**
- **Do not place any objects between the door and the seat. They may become dangerous projectiles if the side air bag inflates.**
- **Do not install any accessories on the side or near the side air bags.**

ON ENG 3.qxp 1/8/2019 3:05 PM Page 67

Curtain air bag (if equipped)



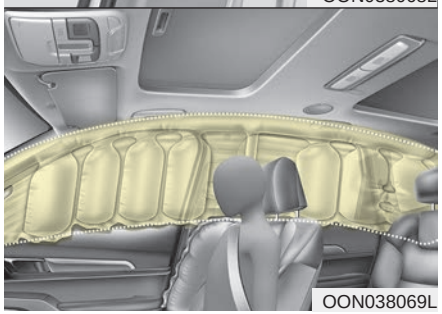

❊ The actual air bags in the vehicle may differ from the illustration.

Curtain air bags are located along both sides of the roof rails above the front and rear doors.

They are designed to help protect the heads of the front seat occupants and the rear outboard seat occupants in certain side impact collisions.

The curtain air bags are designed to deploy during certain side impact collisions, depending on the crash severity, angle, speed and point of impact. The curtain air bags are not designed to deploy in all side impact situations, collisions from the front or rear of the vehicle or in most rollover situations.

The curtain air bags on both sides of the vehicle will deploy in certain rollover situations. (if equipped with rollover senor)

⚠ WARNING

- **Do not hang heavy items on the coat hooks for safety reasons.**
- **In order for side and curtain air bags to provide the best protection, both front seat occupants and both outboard rear occupants should sit in an upright position with the seat belts properly fastened.**

  Importantly, children should sit in a proper child restraint system in the rear seat.
- **When children are seated in the rear outboard seats, they must be seated in the proper child restraint system.**

  Make sure to put the child restraint system as far away from the door side as possible, and secure the child restraint system in a locked position.

(Continued)

ON ENG 3.qxp 1/8/2019 3:05 PM Page 68

(Continued)

- **Do not allow the passengers to lean their heads or bodies onto doors, put their arms on the doors, stretch their arms out of the window, or place objects between the doors and passengers when they are seated on seats equipped with side and/or curtain air bags.**
- **Never try to open or repair any components of the curtain air bag system. If necessary, have the system serviced by a professional workshop. Kia recommends to visit an authorized Kia dealer/service partner.**

Failure to follow the above mentioned instructions can result in injury or death to the vehicle occupants in an accident.

⚠ WARNING - No attaching objects

- **Do not place any objects over the air bag. Also, do not attach any objects around the area the air bag inflates such as the door, side door glass, front and rear pillar, roof side rail.**
- **Do not hang hard or breakable objects on the clothes hanger.**

ON ENG 3.qxp 1/8/2019 3:05 PM Page 69

Why didn't my air bag go off in a collision? (Inflation and non-inflation conditions of the air bag)

There are many types of accidents in which the air bag would not be expected to provide additional protection.

These include rear impacts, second or third collisions in multiple impact accidents, as well as low speed impacts.

Air bag collision sensors

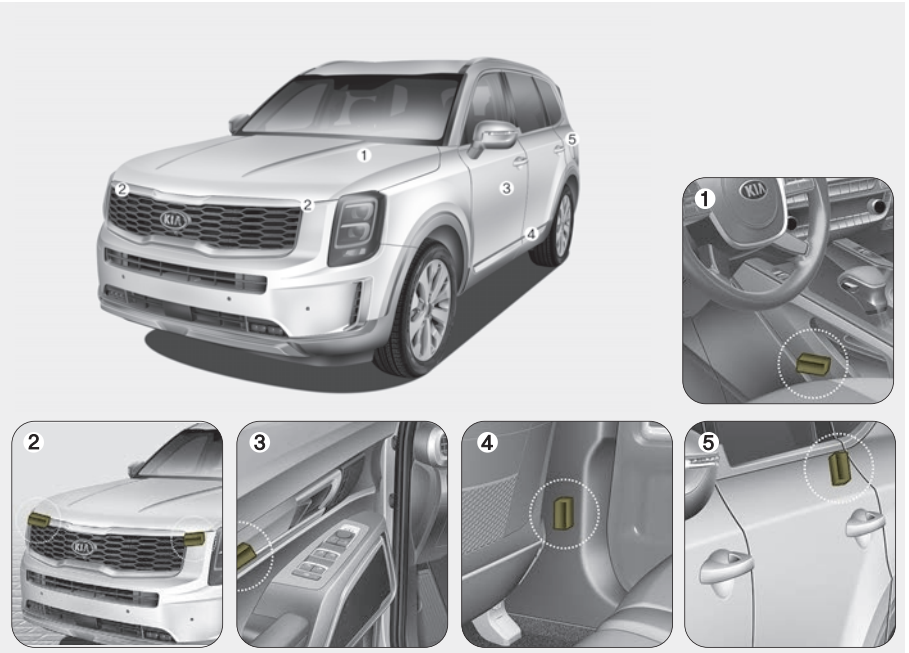

OON038070L/OON038071L/OON038072L/OON038073L/OON038087L/OON038074L

(1) SRS control module / Rollover sensor*
(2) Front impact sensor
(3) Side pressure sensor (if equipped)
(4) Side impact sensor (if equipped)
(5) Side impact sensor (if equipped)

ON ENG 3.qxp 1/8/2019 3:05 PM Page 70

⚠ WARNING

- **Do not hit or allow any objects to impact the locations where air bag or sensors are installed.**

  This may cause unexpected air bag deployment, which could result in serious personal injury or death.
- **If the installation location or angle of the sensors is altered in any way, the air bags may deploy when they should not or they may not deploy when they should, causing severe injury or death.**

  Therefore, do not try to perform maintenance on or around the air bag sensors. Have the system serviced by a professional workshop. Kia recommends to visit an authorized Kia dealer/service partner.

(Continued)

(Continued)

- **Problems may arise if the sensor installation angles are changed due to the deformation of the front bumper, body or B pillar where side collision sensors are installed. In this case, have the system serviced by a professional workshop. Kia recommends to visit an authorized Kia dealer/service partner.**
- **Your vehicle has been designed to absorb impact and deploy the air bag(s) in certain collisions. Installing bumper guards or replacing a bumper with non-genuine parts may adversely affect your vehicles collision and air bag deployment performance.**

Air bag inflation conditions



Front air bags

Front air bags are designed to inflate in a frontal collision depending on the intensity, speed or angles of impact of the front collision.

ON ENG 3.qxp 1/8/2019 3:05 PM Page 71



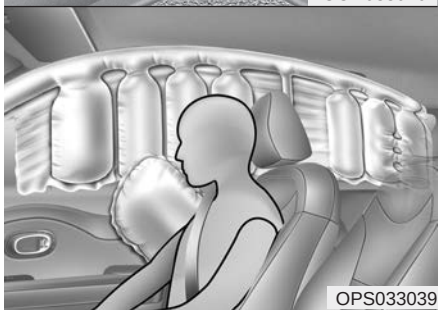

❈ The actual air bags in the vehicle may differ from the illustration.

Side and curtain air bags (if equipped)

Side and/or curtain air bags are designed to inflate when an impact is detected by side collision sensors depending on the strength, speed or angles of impact resulting from a side impact collision.

Also, the side and curtain air bags are designed to inflate when a rollover is detected by a rollover sensor. (if equipped with rollover senor)

Although the front air bags (driver's and front passenger's air bags) are designed to inflate only in frontal collisions, they also may inflate in other types of collisions if the front impact sensors detect a sufficient impact. Side air bags (side and/or curtain air bags) are designed to inflate only in side impact collisions, but they may inflate in other collisions if the side impact sensors detect a sufficient impact.

Side air bag and/or curtain air bags may also inflate where rollover sensors indicate the possibility of a rollover occurring (even if none actually occurs) or in other situations, including when the vehicle is tilted while being towed. (if equipped with rollover senor)

If the vehicle chassis is impacted by bumps or objects on unimproved roads or sidewalks, air bags may deploy. Drive carefully on unimproved roads or on surfaces not designed for vehicle traffic to prevent unintended air bag deployment.

ON ENG 3.qxp 1/8/2019 3:05 PM Page 72

Air bag non-inflation conditions

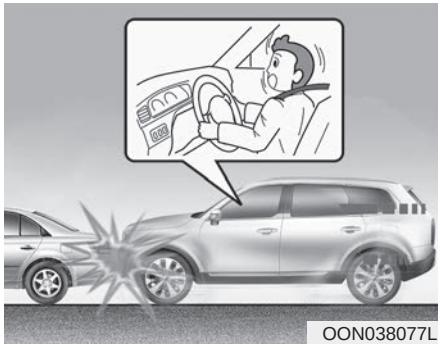

- In certain low-speed collisions the air bags may not deploy. The air bags are designed not to deploy in such cases because they may not provide benefits beyond the protection of the seat belts in such collisions.



- Air bags are not designed to inflate in rear collisions, because occupants are moved backward by the force of the impact. In this case, inflated air bags would not be able to provide any additional benefit.



- Front air bags may not inflate in side impact collisions, because occupants move to the direction of the collision, and thus in side impacts, frontal air bag deployment would not provide additional occupant protection.
- However, if equipped with side and curtain air bags, the air bags may inflate depending on the intensity, vehicle speed and angles of impact.

ON ENG 3.qxp 1/8/2019 3:05 PM Page 73

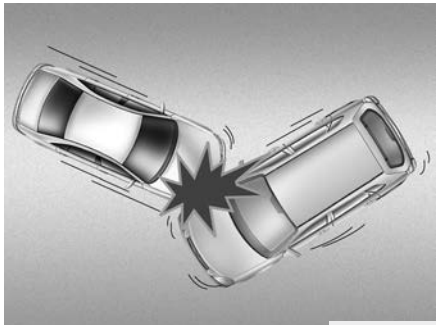

OED036102

- In an angled collision, the force of impact may direct the occupants in a direction where the air bags would not be able to provide any additional benefit, and thus the sensors may not deploy any air bags.

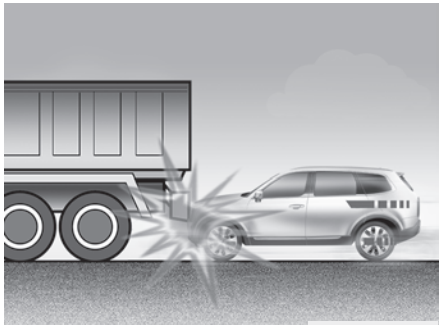

OON038081L

- Just before impact, drivers often brake heavily. Such heavy braking lowers the front portion of the vehicle causing it to “ride” under a vehicle with a higher ground clearance. Air bags may not inflate in this "under-ride" situation because deceleration forces that are detected by sensors may be significantly replaced by such “under-ride” collisions.

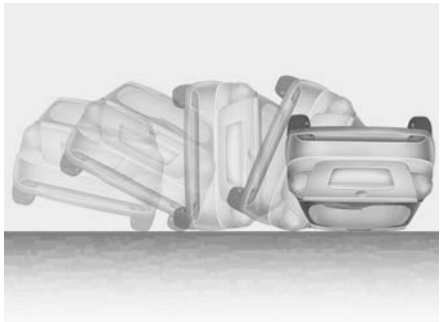

OED036104

- Air bags may not inflate in rollover accidents because the vehicle can not detect rollover accident. (if not equipped with rollover sensor)
- Front air bags may not inflate in all rollover accidents where the SRSCM indicates that the front air bag deployment would not provide additional occupant protection. (if equipped with rollover senor)

  However, side and/or curtain air bags may inflate when the vehicle is rolled over following (or after) side impact collision.

ON ENG 3.qxp 1/8/2019 3:05 PM Page 74

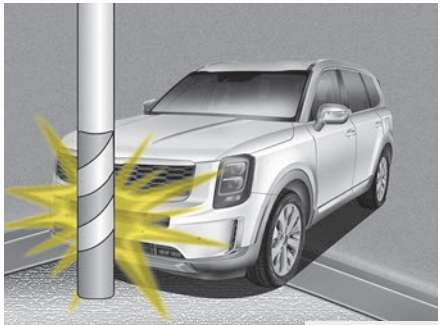
OON038082L

- Air bags may not inflate if the vehicle collides with objects such as utility poles or trees, where the point of impact is concentrated to one area and the full force of the impact is not delivered to the sensors.

SRS Care

The SRS is virtually maintenance-free and so there are no parts you can safely service by yourself. If the SRS air bag warning light does not illuminate, or continuously remains on, have the system inspected by a professional workshop. Kia recommends to visit an authorized Kia dealer/service partner.

⚠ WARNING

- **Modification to SRS components or wiring, including the addition of any kind of badges to the pad covers or modifications to the body structure, can adversely affect SRS performance and lead to possible injury.**

(Continued)

(Continued)

- **For cleaning the air bag pad covers, use only a soft, dry cloth or one which has been moistened with plain water. Solvents or cleaners could adversely affect the air bag covers and proper deployment of the system.**
- **No objects should be placed over or near the air bag modules on the steering wheel, instrument panel, and the front passenger's panel above the glove box, because any such object could cause harm if the vehicle is in a crash severe enough to cause the air bags to inflate.**
- **If the air bags inflate, have the system replaced by a professional workshop.**

  Kia recommends to visit an authorized Kia dealer/service partner.

(Continued)

ON ENG 3.qxp 1/8/2019 3:05 PM Page 75

(Continued)

- **Do not tamper with or disconnect SRS wiring, or other components of the SRS system. Doing so could result in injury, due to accidental inflation of the air bags or by rendering the SRS inoperative.**
- **If components of the air bag system must be discarded, or if the vehicle must be scrapped, certain safety precautions must be observed. An authorized Kia dealer knows these precautions and can give you the necessary information. Failure to follow these precautions and procedures could increase the risk of personal injury.**
- **If your car was flooded and has soaked carpeting or water on flooring, you shouldn't try to start the engine; in this case, have your vehicle inspected by a professional workshop. Kia recommends to contact an authorized Kia dealer/service partner.**

Additional safety precautions

- **Never let passengers ride in the cargo area or on top of a folded-down back seat.** All occupants should sit upright, fully back in their seats with their seat belts on and their feet on the floor.
- **Passengers should not move out of or change seats while the vehicle is moving.** A passenger who is not wearing a seat belt during a crash or emergency stop can be thrown against the inside of the vehicle, against other occupants, or out of the vehicle.
- **Each seat belt is designed to restrain one occupant.** If more than one person uses the same seat belt, they could be seriously injured or killed in a collision.
- **Do not use any accessories on seat belts.** Devices claiming to improve occupant comfort or reposition the seat belt can reduce the protection provided by the seat belt and increase the chance of serious injury in a crash.
- **Passengers should not place hard or sharp objects between themselves and the air bags.** Carrying hard or sharp objects on your lap or in your mouth can result in injuries if an air bag inflates.
- **Keep occupants away from the air bag covers.** All occupants should sit upright, fully back in their seats with their seat belts on and their feet on the floor. If occupants are too close to the air bag covers, they could be injured if the air bags inflate.
- **Do not attach or place objects on or near the air bag covers.** Any object attached to or placed on the front or side air bag covers could interfere with the proper operation of the air bags.
- **Do not modify the front seats.** Modification of the front seats could interfere with the operation of the supplemental restraint system sensing components or side air bags.

ON ENG 3.qxp 1/8/2019 3:05 PM Page 76

- **Do not place items under the front seats.** Placing items under the front seats could interfere with the operation of the supplemental restraint system sensing components and wiring harnesses.
- **Never hold an infant or child on your lap.** The infant or child could be seriously injured or killed in the event of a crash. All infants and children should be properly restrained in appropriate child safety seats or seat belts in the rear seat.

⚠ WARNING

- **Sitting improperly or out of position can cause occupants to be shifted too close to a deploying air bag, strike the interior structure or be thrown from the vehicle resulting in serious injury or death.**
- **Always sit upright with the seatback in an upright position, centered on the seat cushion with your seat belt on, legs comfortably extended and your feet on the floor.**

⚠ WARNING - Towing Vehicle

Always have the Engine Start/Stop button in the OFF position when your vehicle is being towed. The side air bags may inflate if the vehicle is tilted such as when being towed because of the rollover sensors in the vehicle. (if equipped with rollover senor)

Adding equipment to or modifying your air bag-equipped vehicle

If you modify your vehicle by changing your vehicle's frame, bumper system, front end or side sheet metal or ride height, this may affect the operation of your vehicle's air bag system.

ON ENG 3.qxp 1/8/2019 3:05 PM Page 77

Air bag warning label

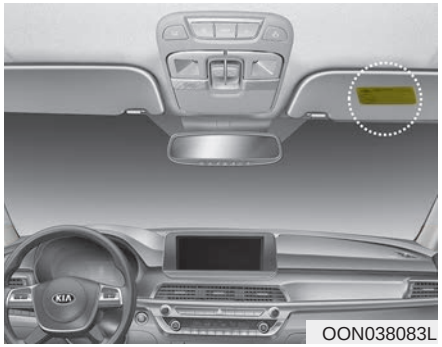

Air bag warning labels are attached to alert driver and passengers of potential risk of air bag system.

Note that these government warnings focus on the risk of children. We also want you to be aware of the risks adults are exposed to which have been described in previous pages.

ON ENG 4.qxp 3/18/2019 2:18 PM Page 1

Features of your vehicle

Smart key 4-5
- Record your key number 4-5
- Key operations 4-5
- Immobilizer system 4-6

Smart key functions 4-7
- Smart key precautions 4-9

Theft-alarm system 4-11
- Armed stage 4-11
- Theft-alarm stage 4-12
- Disarmed stage 4-12

Door locks 4-14
- Operating door locks from outside the vehicle 4-14
- Operating door locks from inside the vehicle 4-15
- Door lock/unlock features 4-17
- Child-protector rear door lock 4-18
- Electronic child safety lock system 4-18
- Safe Exit Assist (SEA) system 4-19
- Rear Occupant Alert (ROA) system 4-21

Tailgate 4-24
- Non-power tailgate 4-24
- Power tailgate 4-26
- Smart tailgate 4-32
- Emergency tailgate safety release 4-36

Windows 4-37
- Power windows 4-38

Hood 4-43
- Opening the hood 4-43
- Hood open warning 4-43
- Closing the hood 4-44

Fuel filler lid 4-45
- Opening the fuel filler lid 4-45
- Closing the fuel filler lid 4-46

Dual sunroof 4-48
- Sunroof open warning 4-49
- Sunshade 4-49
- Sliding the sunroof (for front seat) 4-50
- Tilting the sunroof (for front seat) 4-51
- Resetting the sunroof 4-52

Steering wheel 4-53
- Electronic power steering 4-53
- Tilt & telescopic steering 4-54
- Heated steering wheel 4-55
- Horn 4-55

Mirrors 4-57
- Inside rearview mirror 4-57
- Outside rearview mirror 4-64
- Reverse parking aid function 4-67

ON ENG 4.qxp 3/18/2019 2:18 PM Page 2

Instrument cluster 4-68
- Instrument cluster control 4-69
- Gauges 4-70
- Transmission shift indicator 4-73

LCD display 4-74
- LCD display control 4-74
- LCD display modes 4-75
- Trip information (Trip computer) 4-88
- Service mode 4-91
- LCD display messages 4-92

Warning and indicator lights 4-98
- Warning lights 4-98
- Indicator Lights 4-107

Head Up Display (HUD) 4-113
- Description 4-113
- Head up display on/off 4-114
- Head up display information 4-114
- Head up display setting 4-115

Parking distance warning-reverse 4-116
- Operation of the parking distance warning-reverse . 4-116
- Non-operational conditions of parking distance warning-reverse 4-117
- Parking distance warning-reverse precautions . . . 4-118
- Self-diagnosis 4-119

Parking distance warning 4-120
- Operation of the parking distance warning 4-120
- Non-operational conditions of parking distance warning 4-122
- Self-diagnosis 4-124

Rear view monitor 4-125

Surround view monitoring system 4-126
- Rear view monitor 4-126

Blind spot view monitor system 4-129

Lighting 4-130
- Battery saver function 4-130
- Headlight escort function 4-130
- Daytime running light 4-131
- Lighting control 4-131
- High beam operation 4-133
- Turn signals and lane change signals 4-134
- Front fog light 4-135
- Rear fog light 4-135
- Headlight leveling device 4-136
- High beam assist 4-136

Wipers and washers 4-140
- Windshield wipers 4-141
- Windshield washers 4-143
- Rear window wiper and washer switch 4-144

ON ENG 4.qxp 3/18/2019 2:18 PM Page 3

Interior light 4-145
- Automatic turn off function 4-145
- Map lamp 4-145
- Room lamp 4-146
- Luggage lamp 4-147
- Glove box lamp 4-147
- Vanity mirror lamp 4-147

Welcome system 4-148
- Headlight (Headlamp) escort function 4-148
- Interior light 4-148
- Pocket lamp 4-148

Defroster 4-149
- Rear window defroster 4-149

Manual climate control system 4-150
- Heating and air conditioning 4-151
- Rear climate control 4-158
- System operation 4-162
- Climate control air filter 4-164
- Checking the amount of air conditioner refrigerant and compressor lubricant 4-164

Automatic climate control system 4-165
- Automatic heating and air conditioning 4-166
- Manual heating and air conditioning 4-167
- Rear climate control 4-174
- System operation 4-178
- Climate control air filter 4-180
- Checking the amount of air conditioner refrigerant and compressor lubricant 4-180

Windshield defrosting and defogging 4-181
- Manual climate control system 4-181
- Automatic climate control system 4-182
- Defogging logic 4-183

Climate control additional features 4-186
- Sunroof inside air recirculation 4-186
- Automatic ventilation 4-186

Storage compartment 4-187
- Center console storage 4-187
- Glove box 4-187
- Sunglass holder 4-188
- Luggage box 4-189

Interior features 4-190
- Cigarette lighter 4-190
- Ashtray 4-190
- Cup holder 4-191
- Sunvisor 4-192
- Seat warmer 4-193
- Seat cooler (Air ventilation seat) 4-195
- Power outlet 4-196
- USB charger 4-198
- AC inverter 4-199

ON ENG 4.qxp 3/18/2019 2:18 PM Page 4

• Wireless smart phone charging system 4-200
• Coat hook 4-203
• Floor mat anchor(s) 4-204
• Side curtain 4-204
• Luggage net holder 4-205
Exterior features 4-206
• Roof rack 4-206
Audio system 4-208
• USB port 4-208
• How vehicle radio works 4-209

ON ENG 4.qxp 3/18/2019 2:18 PM Page 5

SMART KEY

Record your key number



The key code number is stamped on the key code tag attached to the key set. Should you lose your keys, Kia recommends to contact an authorized Kia dealer/service partner.

Remove the key code tag and store it in a safe place. Also, record the key code number and keep it in a safe place (not in the vehicle).

Key operations

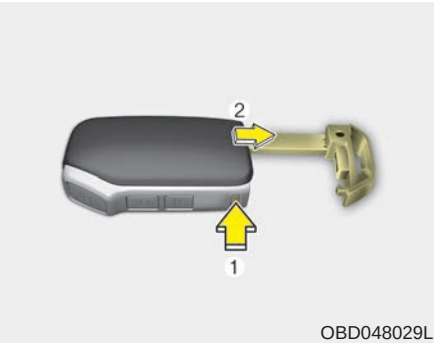

OBD048029L

- Used to start the engine.
- Used to lock and unlock the doors.
- Used to lock and unlock the glove box.

To remove the mechanical key, press and hold the release button (1) and remove the mechanical key (2).

To reinstall the mechanical key, put the key into the hole and push it until a click sound is heard.

⚠ WARNING - Smart key

Leaving children unattended in a vehicle with the Smart key is dangerous even if the start button is not in the ACC or ON position. Children copy adults and they could press the start button. The smart key would enable children to operate power windows or other controls, or even make the vehicle move, which could result in serious bodily injury or even death. Never leave the keys in your vehicle with unsupervised children, when the engine is running.

ON ENG 4.qxp 3/18/2019 2:18 PM Page 6

Immobilizer system

Your vehicle may be equipped with an electronic engine immobilizer system to reduce the risk of unauthorized vehicle use.

Your immobilizer system is comprised of a small transponder in the smart key and electronic devices inside the vehicle.

With the immobilizer system, whenever the engine start/stop button is changed to the ON position, it checks and determines and verifies if the smart key is valid or not.

If the key is determined to be valid, the engine will start.

If the key is determined to be invalid, the engine will not start.

To activate the immobilizer system:

Change the engine start/stop button to the OFF position. The immobilizer system activates automatically. Without a valid smart key for your vehicle, the engine will not start.

To deactivate the immobilizer system:

Change the engine start/stop button to the ON position.

⚠ WARNING

In order to prevent theft of your vehicle, do not leave spare keys anywhere in your vehicle. Your immobilizer password is a customer unique password and should be kept confidential. Do not leave this number anywhere in your vehicle.

✻ NOTICE

When starting the engine, do not use the key with other immobilizer keys around. Otherwise the engine may not start or may stop soon after it starts. Keep each key separately in order to avoid a starting malfunction.

⚠ CAUTION

Do not put metal accessories near the smart key. Metal accessories may interrupt the transponder signal and may prevent the engine from being started.

✻ NOTICE

If you need additional keys or lose your keys, Kia recommends to visit an authorized Kia dealer/service partner.

ON ENG 4.qxp 3/18/2019 2:18 PM Page 7

SMART KEY FUNCTIONS

■ Type A



OBD048031L

■ Type B



OBD048093L

With a smart key, you can lock or unlock a door and even start the engine without inserting the key.



OSK3048047L

Carrying the smart key, you may lock and unlock the vehicle doors (and tailgate). Also, you may start the engine. Refer to the following, for more details.

Locking (1)

Pressing the button of the front outside door handles with all doors closed and any door unlocked, locks all the doors. If all doors and engine hood are closed, the hazard warning lights will blink once to indicate that all doors are locked.

The button will only operate when the smart key is within 1 ~ 2 m (39 ~ 78 in.) from the outside door handle. If you want to make sure that a door has locked or not, you should check the door lock button inside the vehicle or pull the outside door handle.

Even though you press the outside door handle buttons, the doors will not lock and the chime will sound for 3 seconds if any of following occur:

- The smart key is in the vehicle.
- The Engine Start/Stop button is in the ACC or ON position.
- Any door except the tailgate is open.

ON ENG 4.qxp 3/18/2019 2:18 PM Page 8

Unlocking (2)

Pressing the button of the front outside door handles with all doors closed and locked, unlocks all the doors. The hazard warning lights blink twice to indicate that all doors are unlocked.

The button will only operate when the smart key is within 0.7 ~ 1 m (28 ~ 40 in.) from the outside door handle.

When the smart key is recognized in the area of 0.7 ~ 1 m (28 ~ 40 in.) from the front outside door handle, other people can also open the door without possession of the smart key.

After pressing the button, the doors will lock automatically unless you open any door within 30 seconds.

Tailgate unlocking (3)

If you are within 0.7 m ~ 1 m (28 ~ 40 in.) from the outside tailgate handle, with your smart key in possession, the tailgate will unlock and open when you press the tailgate handle switch.

The hazard warning lights will blink twice to indicate that the tailgate is unlocked.

Also, once the tailgate is opened and then closed, the tailgate will lock automatically.

Start-up

You can start the engine without inserting the key. For detailed information refer to “Starting the engine with a smart key” in chapter 5.

Remote start (4, if equipped, For Middle East)

You can start the engine and turn on the climate system by pressing the remote start button (4) outside the vehicle equipped with automatic transmission.

To start and stop engine remotely :

1. Press the door lock button (1), and then the hazard warning lights blink once to alert you.
2. Press the remote start button (4) for more than 2 seconds to start engine within 4 seconds after pressing the door lock button (1).
3. While remote starting, the hazard warning lights blink. If you want to stop the engine, press the remote start button (4) again.

The climate system will be continuously maintained, as selected when the engine is restarted. If the climate system turned off before you stopped the engine, the climate system does not operate when you start the engine remotely.

ON ENG 4.qxp 3/18/2019 2:18 PM Page 9

If someone without a designated smart key rides your vehicle while remote starting, the engine is automatically stopped for security.

✻ NOTICE

After remotely starting the engine, the engine will turn off automatically after 10 minutes if you do not operate your vehicle.

⚠ CAUTION

- ***The remote start will not work if you exceed the operating distance limit (about 10 m).***
- ***Avoid idling the engine for prolonged periods to obey the emission regulations in your country.***
- ***Laws in your country may restrict the use of remote start.***

  You should check country regulations before using this remote starting system.
- ***It is only possible to start the engine remotely when the shift lever is in P (Parking) position.***
- ***If the hood or the tailgate is opened, you can't start the engine remotely.***

Smart key precautions

✻ NOTICE

- **If, for some reason, you happen to lose your smart key, you will not be able to start the engine. Tow the vehicle, if necessary, contact a professional workshop. Kia recommends to contact an authorized Kia dealer/service partner.**
- **A maximum of 2 smart keys can be registered to a single vehicle. If you lose a smart key, Kia recommends to contact an authorized Kia dealer/service partner.**
- **The smart key will not work if any of the following occurs:**
  - **The smart key is close to a radio transmitter such as a radio station or an airport which can interfere with normal operation of the smart key.**
  - **The smart key is near a mobile two-way radio system or a cellular phone.**
  - **Another vehicle's smart key is being operated close to your vehicle.**

(Continued)

ON ENG 4.qxp 3/18/2019 2:18 PM Page 10

(Continued)

When the smart key does not work properly, open and close the door with the mechanical key. If you have a problem with the smart key, Kia recommends to contact an authorized Kia dealer/service partner.

- **If the smart key is in close proximity to your cell phone or smart phone, the signal from the smart key could be blocked by normal operation of your cell phone or smart phone. This is especially important when the phone is active such as making call, receiving calls, text messaging, and/or sending/receiving emails. Avoid placing the smart key and your cell phone or smart phone in the same pants or jacket pocket and maintain adequate distance between the two devices.**

⚠ CAUTION

Keep the smart key away from water or any liquid. If the keyless entry system is inoperative due to exposure to water or liquids, it will not be covered by your manufacturer's vehicle warranty.

ON ENG 4.qxp 3/18/2019 2:18 PM Page 11

THEFT-ALARM SYSTEM (IF EQUIPPED)

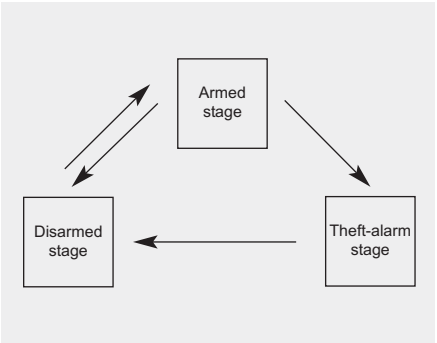

This system is designed to provide protection from unauthorized entry into the vehicle. This system is operated in three stages: the first is the "Armed" stage, the second is the "Theft-alarm" stage, and the third is the "Disarmed" stage. If triggered, the system provides an audible alarm with blinking of the hazard warning lights.

Armed stage

Park the vehicle and stop the engine. Arm the system as described below.

Using the smart key

1. Turn off the engine.
2. Make sure that all doors, the engine hood and tailgate are closed and latched.
3. • Lock the doors by pressing the button of the front outside door handle with the smart key in your possession.

   After completion of the steps above, the hazard warning lights will operate once to indicate that the system is armed.

   If the tailgate or engine hood remains opened, the hazard warning lights will not operate and theft-alarm will not arm. After this, if the tailgate and engine hood are closed, the hazard warning lights will blink once and the theft-alarm will arm.

• Lock the doors by pressing the lock button on the smart key.

After completion of the steps above, the hazard warning lights will operate once to indicate that the system is armed.

If the tailgate or engine hood remains opened, the hazard warning lights will not operate and theft-alarm will not arm. After this, if the tailgate and engine hood are closed, the hazard warning lights will blink once and the theft-alarm will arm.

ON ENG 4.qxp 3/18/2019 2:18 PM Page 12

Do not arm the system until all passengers have left the vehicle. If the system is armed while a passenger(s) remains in the vehicle, the alarm may be activated when the remaining passenger(s) leaves the vehicle. If any door (or tailgate) or engine hood is opened within 30 seconds after the system enters the armed stage, the system will be disarmed to prevent unnecessary alarm.

Theft-alarm stage

The alarm will be activated if any of the following occurs while the system is armed.

- A front or rear door is opened without using the transmitter.
- The tailgate is opened without using the transmitter.
- The engine hood is opened.

The horn will sound and the hazard warning lights will blink continuously for approximately 27 seconds. Then, an alarm will sound two times with 10 seconds interval. If the alarm situation does not change after the alarm has sounded, it will go off again. To turn off the system, unlock the doors with the transmitter.

Disarmed stage

The system will be disarmed when:

Smart key

- The door unlock button is pressed.
- The button of the front outside door is pressed while carrying the smart key.
- The engine is started. (within 3 seconds)

After the doors are unlocked, the hazard warning lights will blink twice to indicate that the system is disarmed.

After pressing the unlock button, if any door (or tailgate) is not opened within 30 seconds, the system will be rearmed.

ON ENG 4.qxp 3/18/2019 2:18 PM Page 13

✻ NOTICE

- **If the system is not disarmed with the smart key, open the door with the mechanical key and start the engine. Then the system will be disarmed.**
- **If you lose your keys, Kia recommends to visit an authorized Kia dealer/service partner.**

⚠ CAUTION

Do not change, alter or adjust the theft-alarm system because it could cause the theft-alarm system to malfunction have the system serviced by a professional workshop. Kia recommends to visit an authorized Kia dealer/service partner.

Malfunctions caused by improper alterations, adjustments or modifications to the theft-alarm system are not covered by your vehicle manufacturer warranty.

ON ENG 4.qxp 3/18/2019 2:18 PM Page 14

DOOR LOCKS

Operating door locks from outside the vehicle

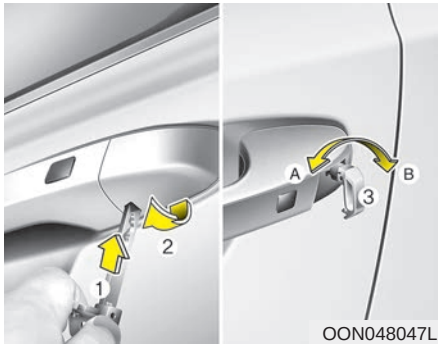

To remove the cover :

1. Pull out the door handle.
2. Press the lever (1) located inside the bottom part of the cover with a key or flat-head screwdriver.
3. Push out the cover (2) while pressing the lever.

- Turn the key toward the rear of the vehicle to lock and toward the front of the vehicle to unlock.
- If you Unlock (A)/Lock (B) the driver's door with a key, only the driver's door will lock/unlock.
- Doors can also be locked and unlocked with the transmitter.
- Once the doors are unlocked, they may be opened by pulling the door handle.
- When closing the door, push the door by hand. Make sure the doors are closed securely.
- When the vehicle's transmitter battery expires and you leave the vehicle, make sure all the door are locked. You can lock the driver's door with a key and the rest of the door with the lock button above the door inside handle.

⚠ CAUTION

Be careful not to damage the cover while removing it or misplace it after removing it.

✻ NOTICE

- **In cold and wet climates, door lock and door mechanisms may not work properly due to freezing conditions.**
- **If the door is locked/unlocked multiple times in rapid succession with either the vehicle key or door lock switch, the system may stop operating temporarily in order to protect the circuit and prevent damage to system components.**

ON ENG 4.qxp 3/18/2019 2:19 PM Page 15

⚠ WARNING

- **If you don't close the door securely, the door may open on it's own.**
- **Make sure that no ones hands or other body parts are trapped when closing doors.**

⚠ WARNING

If someone/somebody must spend a long time in the vehicle when it is very hot or cold outside, there is risk of injuries or danger to life. Do not lock the vehicle from the outside when there are people in it.

⚠ CAUTION

Do not frequently repeat opening and closing of doors, or apply excessive force to a door while the door closer is operating.

Operating door locks from inside the vehicle

With the door lock button

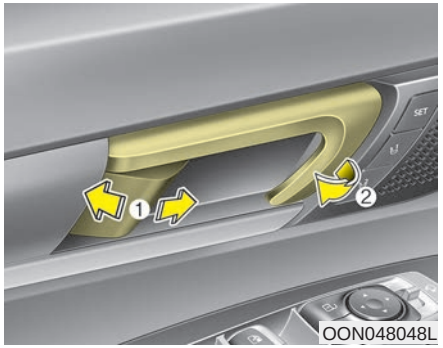

- To unlock a door, push the door lock button (1) to the "Unlock" position. The red mark on the button will be visible.
- To lock a door, push the door lock button (1) to the "Lock" position. If the door is locked properly, the red mark on the door lock button will not be visible.
- To open a door, pull the door handle (2) outward.
- If the inner door handle of the driver's (or front passenger's) door is pulled when the door lock button is in the lock position, the button will unlock and the door will open. (if equipped)
- Doors cannot be locked if the smart key is in the vehicle and/or door is open.

⚠ WARNING - Door lock malfunction

If a power door lock ever fails to function while you are in the vehicle, try one or more of the following techniques to exit:

- **Operate the door unlock feature repeatedly (both electronic and manual) while simultaneously pulling on the door handle.**
- **Operate the other door locks and handles, front and rear.**
- **Lower a front window and use the key to unlock the door from outside.**
- **Move to the cargo area and open the tailgate.**

ON ENG 4.qxp 3/18/2019 2:19 PM Page 16

⚠ WARNING

Do not pull the inner door handle of driver's (or passenger's) door while the vehicle is moving.

With central door lock switch

■ Driver`s door

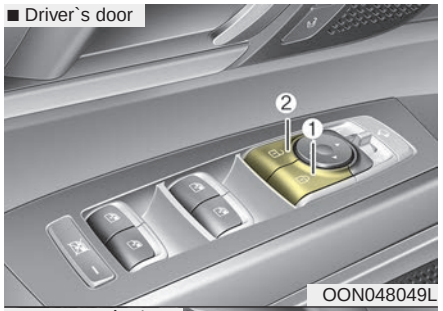

OON048049L

■ Passenger`s door

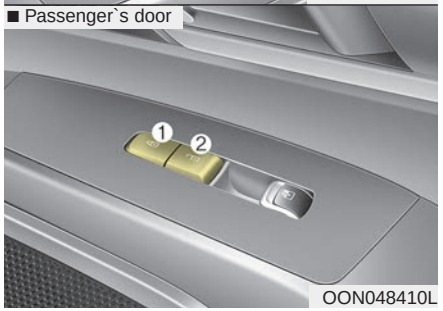

OON048410L

Operate by pressing the central door lock switch.

- When pressing the right portion(1) for driver side of the switch, all vehicle doors will lock.
- When pressing the left portion(2) for driver side of the switch, all vehicle doors will unlock.
- If the smart key is in the vehicle and any door is opened, the doors will not lock even though the right portion(1) for driver side of the central door lock switch is pressed.

⚠ WARNING - Doors

- **The doors should always be fully closed and locked while the vehicle is in motion to prevent accidental opening of the door. Locked doors will also discourage potential intruders when the vehicle stops or slows down.**
- **Be careful when opening doors and watch for vehicles, motorcycles, bicycles or pedestrians approaching the vehicle in the path of the door. Opening a door when something is approaching can cause damage or injury.**

ON ENG 4.qxp 3/18/2019 2:19 PM Page 17

⚠ WARNING - Unlocked vehicles

Leaving your vehicle unlocked can invite theft or possible harm to you or others from someone hiding in your vehicle while you are gone. Always press the Engine Start/Stop Button to the OFF position, engage the parking brake, close all windows and lock all doors when leaving your vehicle unattended.

⚠ WARNING - Unattended children

An enclosed vehicle can become extremely hot, causing death or severe injury to unattended children or animals who cannot escape the vehicle. Furthermore, children might operate features of the vehicle that could injure them, or they could encounter other harm, possibly from someone gaining entry to the vehicle. Never leave children or animals unattended in your vehicle.

Door lock/unlock features

Impact sensing door unlock system

All doors will automatically unlock when an impact causes the air bags to deploy.

Speed sensing door lock system

All doors will automatically lock after the vehicle speed exceeds 15 km/h.

Shift lever door lock/unlock system

- All doors will automatically lock when the shift lever is moved out of P (Park).
- All doors will automatically unlock when the shift lever is moved into P (Park).

You can activate or deactivate the auto door lock/unlock features in the vehicle. Refer to "User setting" in this chapter.

ON ENG 4.qxp 3/18/2019 2:19 PM Page 18

Child-protector rear door lock

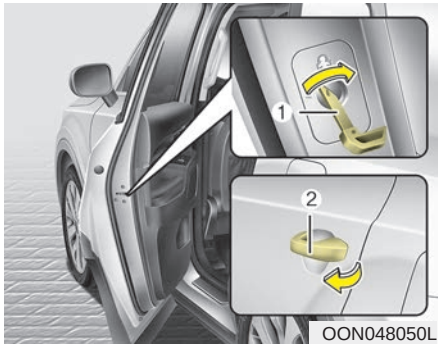

The child safety lock is provided to help prevent children from accidentally opening the rear doors from inside the vehicle. The rear door safety locks should be used whenever children are in the vehicle.

The child safety lock is located on the edge of each rear door. When the child safety lock is in the lock position (1), the rear door will not open if the inner door handle (2) is pulled.

To lock the child safety lock, insert a key (or screwdriver) into the hole and turn it to the lock position.

To allow a rear door to be opened from inside the vehicle, unlock the child safety lock.

⚠ WARNING - Rear door locks

If children accidentally open the rear doors while the vehicle is in motion, they could fall out and be severely injured or killed. To prevent children from opening the rear doors from the inside, the rear door safety locks should be used whenever children are in the vehicle.

Electronic Child Safety Lock System (if equipped)



If you push the Electronic child safety lock switch and the indicator illuminates, rear passengers cannot open the rear door from inside the vehicle. To cancel the Electronic child safety lock system, push the Electronic child safety lock system switch one more time and then the indicator turns off.

ON ENG 4.qxp 3/18/2019 2:19 PM Page 19

The Safe Exit Assist (SEA) system is operated when the Electronic child safety lock system is activated and the Safe Exit Assist (SEA) function is selected in the cluster. However, the Safe Exit Assist (SEA) system does not automatically activate the Electronic child safety lock system.

The Electronic child safety lock system can be operated for approximately 10 minutes after the engine is turned off.

If your vehicle is equipped with the Electronic child safety lock system, the Child-protector rear door locks which is manually operated is not provided.

If Electronic child safety lock system is activated, rear passenger cannot open or close the rear window also. For more details, refer to “Windows” in this chapter.

⚠ CAUTION



OON048103L

If the Electronic child safety lock system is not operated when pushing the Electronic child safety lock switch, the message is displayed and the alarm will sound.

If this occurs, have the system checked by a professional workshop. Kia recommends to visit an authorized Kia dealer/service partner.

Safe Exit Assist (SEA) System (if equipped)

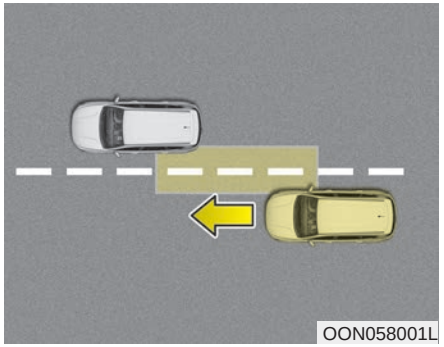

OON058001L

1. The Safe Exit Assist system is provided to help prevent the passengers from opening a door by warning the passengers when an approaching vehicle from the rear area is detected after the vehicle stops.

ON ENG 4.qxp 3/18/2019 2:19 PM Page 20

2. When an approaching vehicle from the rear area is detected after the vehicle stops, the rear door does not unlock even when the driver tries to unlock the rear door using the Electronic child safety lock button. The “Check surroundings then try again” warning message appears on the cluster and a warning sounds.

   However if you press the switch within 10 seconds after the warning message appears (the indicator on the switch will turn off), the system judges that the driver unlocked the door acknowledging the rear status and released regardless of the rear status.
3. When an approaching vehicle from the rear is detected the moment the door is opened, the "Watch for traffic" warning message appears on the cluster and a warning sounds.

- The above 2 and 3 functions are activated when you select ‘Driver Assistance → Blind-Spot Safety → Safe Exit Assistance (SEA)’ from the User Settings mode in the cluster LCD display.
- The Electronic child safety lock system will operate for approximately 10 minutes after the Engine Start/Stop button is turned to OFF position. After about 10 minutes, the indicator on the switch turns off and you cannot deactivate the Electronic child safety lock system. To deactivate the Electronic child safety lock system, press the Electronic child safety lock switch again with the Engine Start/Stop button in the ON position or after starting the engine.
- When the power is supplied again after removing the battery or battery discharge while the child safety lock is in the lock position, press the child safety lock switch once again to match the state of the indicator on the child safety lock switch and actual status of the Electronic child safety lock system.
- If the airbag is activated while the child safety lock switch is ON (the indicator on the switch illuminates) it automatically switches OFF and the rear door is unlocked.

⚠ CAUTION

- ***The Safe Exit Assist (SEA) system may not operate normally if there is any vehicle or obstacle at the rear area of your vehicle.***
- ***The Safe Exit Assist (SEA) system may not operate normally when a vehicle is coming rapidly two lanes over from your vehicle or a vehicle is approaching at a fast speed from the rear in the lane next to your vehicle.***
- ***The Safe Exit Assist (SEA) system may be activated later than normal or may not operate normally if a vehicle is approaching fast from the rear of your vehicle.***

(Continued)

ON ENG 4.qxp 3/18/2019 2:19 PM Page 21

(Continued)

- *The Safe Exit Assist (SEA) system will not operate if there is a malfunction with the Blind-Spot Collision Warning (BCW) system as follows:*
  - *When the BCW warning message appears*

    When the BCW sensor or the sensor surrounding is polluted or covered
  - *When the BCW does not warn or warns wrongly*

For more details, refer to cautions and limitations in "Blind-Spot Collision Warning (BCW)" in chapter 5.

⚠ WARNING

- **The system does not detect every obstacle approaching the vehicle exit.**
- **The driver and passenger are responsible for any obstacles while exiting the vehicle.**

  Always check the surrounding before you exit the vehicle.

Rear Occupant Alert (ROA) System (if equipped)

The Rear Occupant Alert (ROA) system is provided to help prevent exiting the vehicle with the rear passenger left in the vehicle.

- 1st alert
  - When you open the front door after opening and closing the rear door and turning off the engine, the "Check rear seats" warning message appears on the cluster.
- 2nd alert
  - After the 1st alert the 2nd alert operates when any movement is detected in the vehicle after the driver's door is closed and all the doors are locked. The horn will activate for about 25 seconds. If the system continues to detect a movement the alert operates up to 8 times.
  - Unlock the door with the remote key or smart key to stop the alert.
  - The system detects movement in the vehicle for 24 hours after the door is locked.

ON ENG 4.qxp 3/18/2019 2:19 PM Page 22

- The 2nd alert is activated only after the prior activation of the 1st alert.
- You can activate or deactivate the Rear Occupant Alert (ROA) system from the User Settings mode in the cluster LCD display. The option can be found under the following menu:

  User Settings → Convenience → Rear Occupant Alert

⚠ CAUTION

- ***Make sure that all the windows are closed. If the window is open, the alert may activate by the sensor detecting an unintended movement (e.g. wind or bugs).***

(Continued)

(Continued)

■ Cluster



OON048125L

■ Steering wheel



OON048096L

- ***If you do not want to use the Rear Occupant Alert (ROA) system, press OK button on the steering wheel when the 1st alert is displayed on the cluster. Doing so will deactivate the 2nd alert once.***

⚠ CAUTION

- ***If boxes or objects are stacked in the vehicle, the system may not detect the obstacle. Also, the warning may generate if the box or object falls off.***
- ***The sensor may not operate normally if the senor is obscured by foreign substances.***
- ***The alert may activate if movement in the driver or passenger seat is detected.***
- ***The alert may activate with the doors locked due to car wash or surrounding vibration or noise.***
- ***Inside movement detection is stopped under remote start (if equipped) status.***

ON ENG 4.qxp 3/18/2019 2:19 PM Page 23

⚠ WARNING

- **Even if your vehicle is equipped with the Rear Occupant Alert (ROA) system, always make sure you check the rear seat before you get out of the vehicle.**

  The alert may not operate if:

  - The movement does not continue for a certain period of time or the movement is small.

  - If a child sits on a vehicle seat without a child car seat.

  - The rear passenger is covered with an obstacle such as a blanket.

  - Also, always be cautious of the passenger's safety as the detection function and 2nd alert may not operate according to the surrounding environment and certain conditions.

ON ENG 4.qxp 3/18/2019 2:19 PM Page 24

TAILGATE

⚠ WARNING - Exhaust fumes

If you drive with the tailgate open, you will draw dangerous exhaust fumes into your vehicle which can cause serious injury or death to vehicle occupants.

If you must drive with the tailgate open, keep the air vents and all windows open so that additional outside air comes into the vehicle.

⚠ WARNING - Rear cargo area

Occupants should never ride in the rear cargo area where no restraints are available. To avoid injury in the event of an accident or sudden stops, occupants should always be properly restrained.

Non-power tailgate

Opening the tailgate

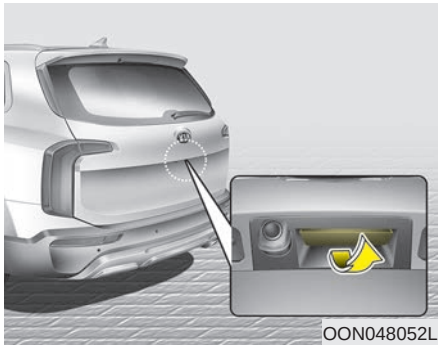

- The tailgate is locked or unlocked when all doors are locked or unlocked with the smart key or central door lock/unlock switch.
- Only the tailgate is unlocked if the tailgate unlock button on the smart key is pressed for approximately 1 second.
- If unlocked, the tailgate can be opened by pressing the handle and pulling it up.
- Once the tailgate is opened and then closed, the tailgate locks automatically. (All doors must be locked.)

✻ NOTICE

In cold and wet climates, door lock and door mechanisms may not work properly due to freezing conditions.

⚠ WARNING

The tailgate swings upward. Make sure no objects or people are near the rear of the vehicle when opening the tailgate.

ON ENG 4.qxp 3/18/2019 2:19 PM Page 25

⚠ WARNING



Do not grasp the part supporting the tailgate (gas lifter), as this may cause serious injury.

⚠ CAUTION

Make certain that you close the tailgate before driving your vehicle. Possible damage may occur to the tailgate lift cylinders and attaching hardware if the tailgate is not closed prior to driving.

Closing the tailgate

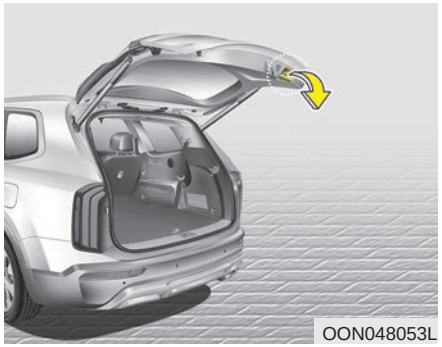

Lower and push down the tailgate firmly. Make sure that the tailgate is securely latched.

⚠ WARNING

Make sure your hands, feet and other parts of your body are safely out of the way before closing the tailgate.

⚠ CAUTION

Make sure nothing is near the tailgate latch and striker while closing the tailgate. It may damage the tailgate's latch.

ON ENG 4.qxp 3/18/2019 2:19 PM Page 26

Power tailgate (if equipped)

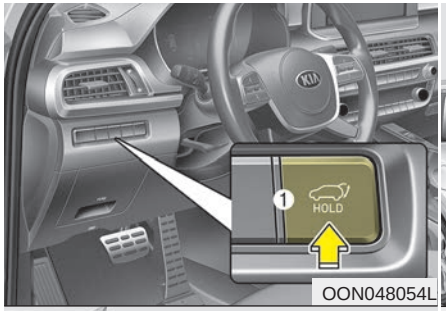

OON048054L



OON048056L

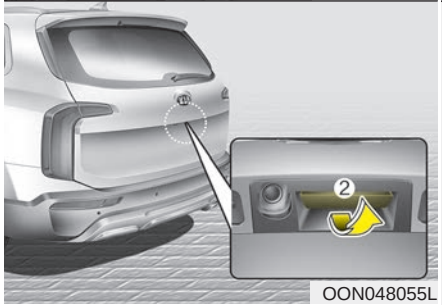

OON048055L



OON048403L

(1) Power tailgate open/close button
(2) Power tailgate handle switch
(3) Power tailgate close button
(4) Power tailgate open/close button

✻ NOTICE

If the engine start/stop button is ON position, the power tailgate can operate when the automatic transmission is in P (Park).

✻ NOTICE

Do not put heavy stuffs on the power tailgate when you operate the power tailgate. Additional weight on tailgate could cause damages to the system.

ON ENG 4.qxp 3/18/2019 2:19 PM Page 27

⚠ WARNING

Never leave children or animals unattended in your vehicle. Children or animals might operate the power tailgate that could result in injury to themselves or others, or damage the vehicle.

⚠ WARNING

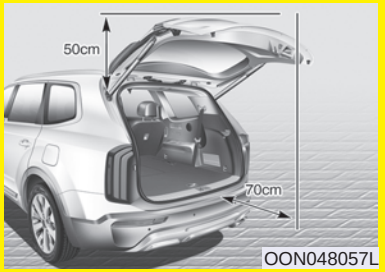

Make sure that there are no passengers or objects in the path of the power tailgate (or smart tailgate) prior to use. Serious injury, damage to the vehicle or damage to surrounding objects may result if contact with the power tailgate (or smart tailgate) occurs.

⚠ CAUTION

Automatic opening/closing of power tailgate is recommended. Do not apply excessive force when opening power tailgate manually, otherwise it can damage the power tailgate system.

ON ENG 4.qxp 3/18/2019 2:19 PM Page 28

Opening the tailgate



OON048058L

The power tailgate will open automatically by doing one of the following:

- Press the tailgate unlock button on the smart key for approximately one second.

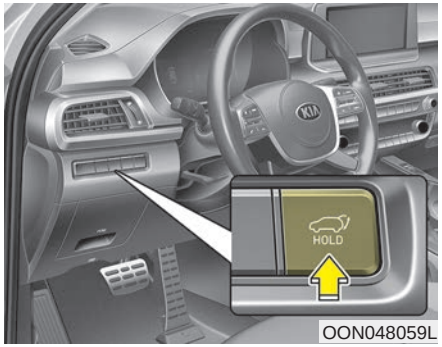

OON048059L

- Press the power tailgate open button for approximately one second.
- For emergency stop while power tailgate operating, press the power tailgate open/close button shortly.

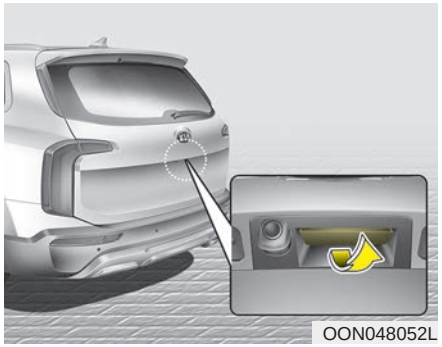

OON048052L

- Press the tailgate handle switch carrying the smart key with you.

ON ENG 4.qxp 3/18/2019 2:19 PM Page 29



OON048058L

- If you press the open button and hold it while the tailgate is open, the tailgate will be closed with warning sound.

Closing the tailgate

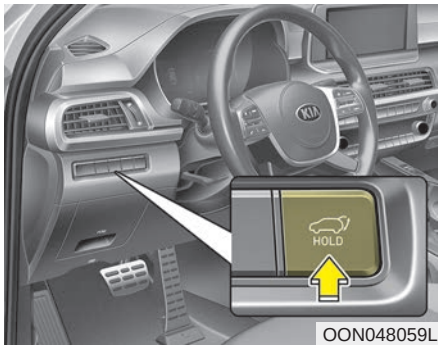

OON048059L

- Press the power tailgate close button for approximately one second when the tailgate is opened.

  The tailgate will close and lock automatically.
- For emergency stop while power tailgate operating, press the power tailgate open/close button shortly.

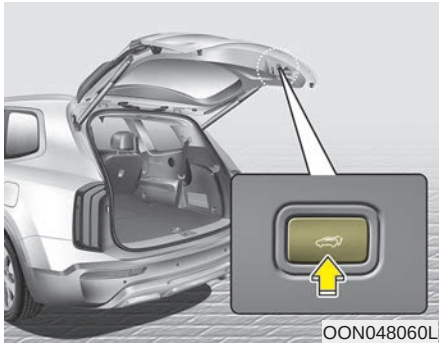

OON048060L

- Press the power tailgate close button for approximately one second when the tailgate is opened.

  The tailgate will close and lock automatically.

ON ENG 4.qxp 3/18/2019 2:19 PM Page 30

Power tailgate non-opening conditions

The power tailgate will not open or close automatically, when the vehicle is moving more than 3km/h (2mph).

⚠ WARNING

The chime will sound continuously if you drive over 3km/h (2mph) with the tailgate opened. Stop your vehicle immediately at a safe place and check if your tailgate is opened.

⚠ CAUTION

Do not operate the power tailgate more than 5 times continuously.

It may damage the power tailgate system. If you operate the power tailgate more than 5 times continuously, the chime will sound 3 times and the power tailgate will not operate. At this time, stop operating the tailgate and leave it for more than 1 minute.

✻ NOTICE

- **The power tailgate can be operated when the engine is not running. However the power tailgate operation consumes large amounts of vehicle electric power. To prevent the battery from being discharged, do not operate it excessively e.g.: more than approximately 10 times repeatedly.**
- **To prevent the battery from being discharged, do not leave the power tailgate in the open position for a long lime.**
- **Do not modify or repair any part of the power tailgate by yourself. Kia recommends to visit an authorized Kia dealer/service partner.**
- **When jacking up the vehicle to change a tire or repair the vehicle, do not operate the power tailgate. This could cause the power tailgate to operate improperly.**
- **In cold and wet climates, the power tailgate may not work properly due to freezing conditions.**

Automatic reversal

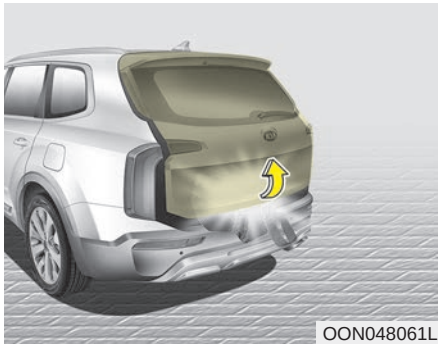

OON048061L

During power opening and closing if the power tailgate is blocked by an object or part of the body, the power tailgate will detect the resistance.

- If the resistance is detected while opening the tailgate, it will stop and move in the opposite direction.
- If the resistance is detected while closing the tailgate, it will stop and move in the opposite direction.

ON ENG 4.qxp 3/18/2019 2:19 PM Page 31

However, if the resistance is weak such as from an object that is thin or soft, or the tailgate is near the latched position, the automatic stop and reversal may not detect the resistance.

If the automatic reversal feature operates continuously more than twice during opening or closing operation, the power tailgate may stop at that position. At this time, close the tailgate manually and operate the tailgate automatically again.

⚠ WARNING

- **Never intentionally place any object or part of your body in the path of the power tailgate to make sure the automatic reversal operates.**
- **Never operate power tailgate attached with any heavy objects (ex. Bicycles). It could damage the power tailgate.**

How to reset the power tailgate

If the battery has been discharged or disconnected, or if the related fuse has been replaced or disconnected, for the power tailgate to operate normally, reset the power tailgate as follow:

1. Put the shift lever in P (Park).
2. While Pressing the tailgate close button, press the tailgate handle switch for more than 3 seconds. (the chime will sound)
3. Close the tailgate manually.

If the power tailgate does not work properly after the above procedure, have the system checked by a professional workshop. Kia recommends to visit an authorized Kia dealer/service partner.

ON ENG 4.qxp 3/18/2019 2:20 PM Page 32

▶Setting the speed of opening/ closing of power tailgate

- You can adjust the speed by yourself.

❊How to set the speed

Select 'Door' → 'Power tailgate speed' → 'Fast/Normal' on the user settings of the instrument cluster.

- You cannot change the speed when the power tailgate function is turned off or the tailgate is not completely closed.

- The power tailgate speed is initially set as 'fast.'

Please refer to cluster-user setting mode in Chapter 4.

❊ NOTICE

If the power tailgate does not operate normally, check again if the gear position is in right position.

Power tailgate opening height user setting

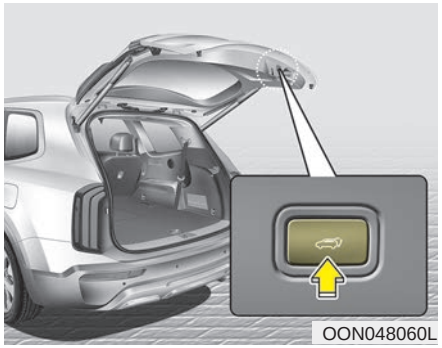
OON048060L

The driver may set the height of a fully opened tailgate by following the below instruction.

1. Position the tailgate manually to the height you prefer.
2. Press the tailgate close button for more than 3 seconds.
3. Close the tailgate manually after hearing the buzzer sound.

The tailgate will open to the height the driver has set up.

Smart tailgate (if equipped)

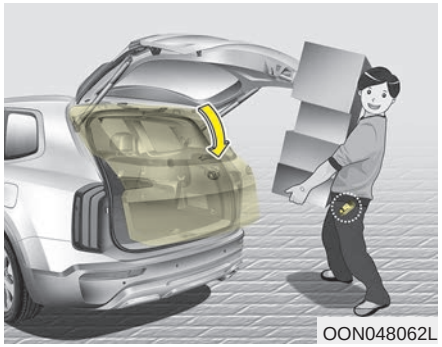
OON048062L

On the vehicle equipped with a smart key, the tailgate can be opened with no-touch activation using the Smart tailgate system.

ON ENG 4.qxp 3/18/2019 2:20 PM Page 33

How to use the Smart Tailgate

The tailgate can be opened with no-touch activation satisfying all the conditions below.

- After 15 seconds when all doors are closed and locked
- Positioned in the detecting area for more than 3 seconds.

✻ NOTICE

- **The Smart Tailgate does not operate when:**
  - **The smart key is detected within 15 seconds after the doors are closed and locked, and is continuously detected.**
  - **The smart key is detected within 15 seconds after the doors are closed and locked, and 1.5 m from the front door handles. (for vehicles equipped with Welcome Light)**
  - **A door is not locked or closed.**
  - **The smart key is in the vehicle.**

1. Setting

To activate the Smart Tailgate, go to User Settings Mode and select Smart Tailgate on the LCD display.

❊ For more details, refer to "LCD Display" in this chapter.

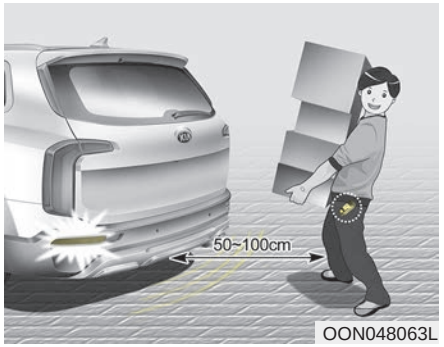

2. Detect and Alert

If you are positioned in the detecting area (50 ~100 cm behind the vehicle) carrying a smart key, the hazard warning lights will blink and chime will sound for about 3 seconds to alert you the smart key has been detected and the tailgate will open.

✻ NOTICE

Do not approach the detecting area if you do not want the tailgate to open. If you have unintentionally entered the detecting area and the hazard warning lights and chime starts to operate, leave the detecting area with the smart key. The tailgate will stay closed.

ON ENG 4.qxp 3/18/2019 2:20 PM Page 34


OON048065L

3. Automatic opening

The hazard warning lights will blink and chime will sound 2 times and then the tailgate will slowly open.

⚠ WARNING

- **Make certain that you close the tailgate before driving your vehicle.**
- **Make sure nobody or objects around the tailgate before opening or closing the tailgate.**
- **Make sure objects in the rear cargo area do not fall out when opening the tailgate on a slope way. It may cause serious injury.**
- **Make sure to deactivate the Smart tailgate function when washing your vehicle.**

  Otherwise, the tailgate may open inadvertently.
- **The key should be kept out of reach of children. Children may inadvertently open the Smart Tailgate while playing around the rear area of the vehicle.**

How to deactivate the Smart Tailgate function using the smart key

■ Smart key



OON048001L

1. Door lock
2. Door unlock
3. Tailgate open

If you press any button of the smart key during the Detect and Alert stage, the Smart Tailgate function will be deactivated.

Make sure to be aware of how to deactivate the Smart Tailgate function for emergency situations.

ON ENG 4.qxp 3/18/2019 2:20 PM Page 35

✻ NOTICE

- **If you press the door unlock button (2), the Smart Tailgate function will be deactivated temporarily. But, if you do not open any door for 30 seconds, the Smart Tailgate function will be activated again.**
- **If you press the tailgate open button (3) for more than 1 second, the tailgate opens.**
- **If you press the door lock button (1) or tailgate open button (3) when the Smart Tailgate function is not in the Detect and Alert stage, the Smart Tailgate function will not be deactivated.**
- **In case you have deactivated the Smart Tailgate function by pressing the smart key button and opened a door, the Smart Tailgate function can be activated again by closing and locking all doors.**

Detecting area



OON048068L

- The Smart Tailgate operates with a welcome alert if the smart key is detected within 50~100 cm from the tailgate.
- The alert stops at once if the smart key is positioned outside the detecting area during the Detect and Alert stage.

✻ NOTICE

- **The Smart Tailgate function will not work if any of the following occurs:**
  - **The smart key is close to a radio transmitter such as a radio station or an airport which can interfere with normal operation of the transmitter.**
  - **The smart key is near a mobile two way radio system or a cellular phone.**
  - **Another vehicle's smart key is being operated close to your vehicle.**
- **The detecting range may decrease or increase when :**
  - **One side of the tire is raised to replace a tire or to inspect the vehicle.**
  - **The vehicle is slantingly parked on a slope or unpaved road, etc.**

ON ENG 4.qxp 3/18/2019 2:20 PM Page 36

Emergency tailgate safety release

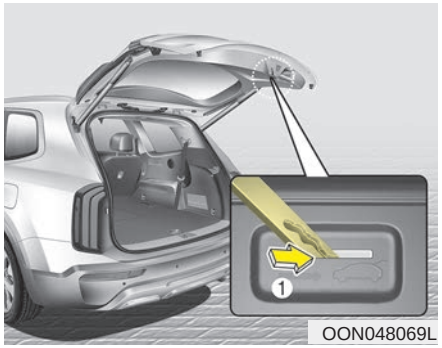

Your vehicle is equipped with the emergency tailgate safety release lever located on the bottom of the tailgate. If you have to open the tailgate urgently inside the tailgate due to battery discharge, external handle failure, or other reasons.

The tailgate can be opened by doing as follows:

1. Input the mechanical key into the hole.
2. Push the mechanical key to the right (1).
3. Push up the tailgate.

ON ENG 4.qxp 3/18/2019 2:20 PM Page 37

WINDOWS

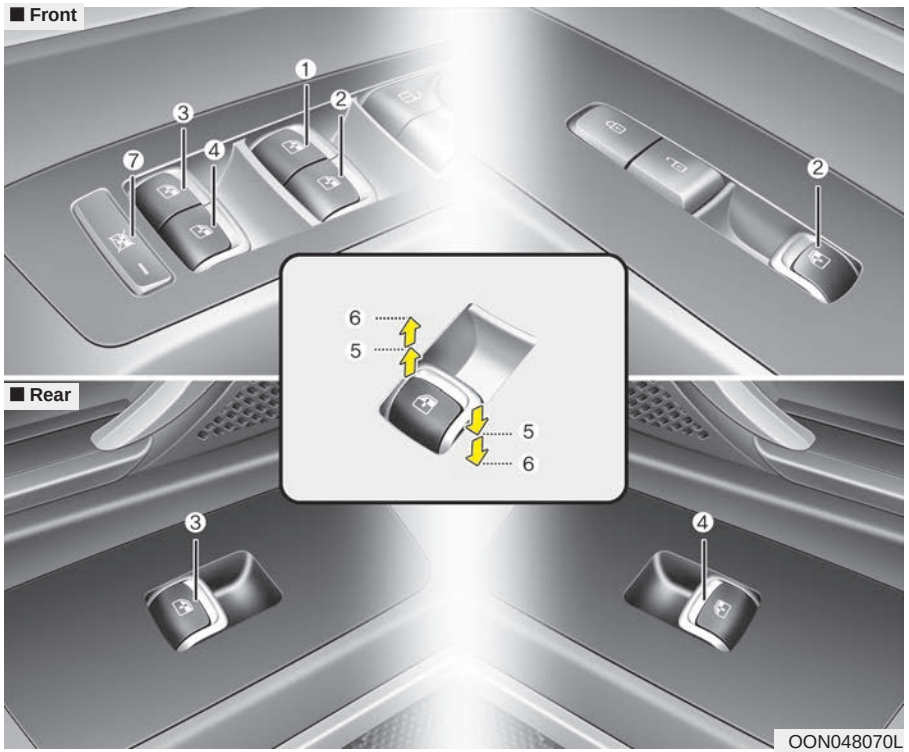

(1) Driver's door power window switch
(2) Front passenger's door power window switch
(3) Rear door (left) power window switch
(4) Rear door (right) power window switch
(5) Window opening and closing
(6) Automatic power window up/down
(7) Power window lock button

✻ NOTICE

In cold and wet climates, power windows may not work properly due to freezing conditions.

ON ENG 4.qxp 3/18/2019 2:20 PM Page 38

Power windows

The Engine Start/Stop Button must be in the ON position for power windows to operate.

Each door has a power window switch that controls the door's window. The driver has a power window lock button which can block the operation of rear passenger windows. The power windows can be operated for approximately 10 minutes after the Engine Start/Stop button turned to the ACC or OFF position. However, if the front doors are opened, the power windows cannot be operated even within the 10 minutes period.

The driver's door has a master power window switch that controls all the windows in the vehicle.

If the window cannot be close because it is blocked by objects, remove the objects and close the window.

✻ NOTICE

While driving with the rear windows down or with the sunroof (if equipped) in an open (or partially open position), your vehicle may demonstrate a wind buffeting or pulsation noise. This noise is a normal occurrence and can be reduced or eliminated by taking the following actions. If the noise occurs with one or both of the rear windows down, partially lower both front windows approximately 3 cm (1 inch). If you experience the noise with the sunroof open, slightly reduce the size of the sunroof opening.

⚠ WARNING

Do not install any accessories in the area of windows. It may impact jam protection.

✻ NOTICE

When the window stops in the occurrence of whistle noise while the air intake control button is in the outside air position and the fan speed is more than 4, the window is automatically lowered to a certain position to prevent whistle noise.

ON ENG 4.qxp 3/18/2019 2:20 PM Page 39

Window opening and closing

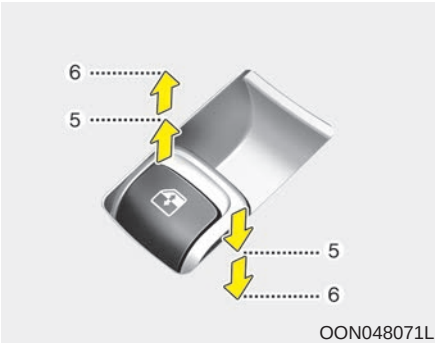

Auto up/down window

Pressing or pulling up the power window switch momentarily to the second detent position (6) completely lowers or raises the window even when the switch is released. To stop the window at the desired position while the window is in operation, pull up or press down and release the switch.

If the power window does not operate normally, the automatic power window system must be reset as follows:

1. Place the Engine Start/Stop Button to the ON position.
2. Close the window and continue pulling up the power window switch for at least 1 second after the window is completely closed.

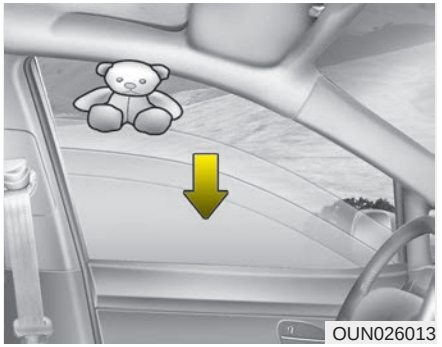

Automatic reversal

If the upward movement of the window is blocked by an object or part of the body, the window will detect the resistance and will stop upward movement. The window will then lower approximately 30 cm (11.8 in.) to allow the object to be cleared.

If the window detects the resistance while the power window switch is pulled up continuously, the window will stop upward movement then lower approximately 2.5 cm (1 in.).

ON ENG 4.qxp 3/18/2019 2:20 PM Page 40

And if the power window switch is pulled up continuously again within 5 seconds after the window is lowered by the automatic window reversal feature, the automatic window reversal will not operate.

✻ NOTICE

The automatic reverse feature for the window is only active when the "auto up" feature is used by fully pulling up the switch. The automatic reverse feature will not operate if the window is raised using the halfway position on the power window switch.

⚠ WARNING

Always check for obstructions before raising any window to avoid injuries or vehicle damage. If an object less than 4 mm (0.16 in.) in diameter is caught between the window glass and the upper window channel, the automatic reverse window may not detect the resistance and will not stop and reverse direction.

⚠ WARNING

The automatic reverse feature doesn't active while resetting power window system.

Make sure body parts or other objects are safely out of the way before closing the windows to avoid injuries or vehicle damage.

Power window lock button



The driver can disable the power window switches on the rear passengers' doors by pressing the power window lock button to the lock position (pressed).

When the power window lock button is pressed :

- The driver's master control can operate all passenger`s power windows.

ON ENG 4.qxp 3/18/2019 2:20 PM Page 41

- The front passenger's control can operate the front passenger's power window.
- The rear passengers' control cannot operate the rear passenger's power window.

⚠ CAUTION

- ***To prevent possible damage to the power window system, do not open or close two windows or more at the same time. This will also ensure the longevity of the fuse.***
- ***Never try to operate the main switch on the driver's door and the individual door window switch in opposite directions at the same time. If this is done, the window will stop and cannot be opened or closed.***

⚠ WARNING - Windows

- **NEVER leave the keys in your vehicle with unsupervised children, when the engine is running.**
- **NEVER leave any child and animal unattended in the vehicle. Even very young children may inadvertently cause the vehicle to move, entangle themselves in the windows, or otherwise injure themselves or others.**
- **Always double check to make sure all arms, hands, head and other obstructions are safely out of the way before closing a window.**
- **Do not allow children play with the power windows. Keep the driver's door power window lock button in the LOCK position (pressed). Serious injury can result from unintentional window operation by the child.**
- **Do not extend heads or any limbs outside the window while the vehicle is in motion.**

Remote window closing system (If equipped)



OON048098L

Press the door lock button (1) for three seconds or longer with the power of the vehicle off. Then, car windows will starts rolling up after the doors are locked. Car windows will roll up as long as you press up the lock button, and they will stop rolling up if you stop pressing the button. Once car windows are completely closed, the emergency light will blink three times.

ON ENG 4.qxp 3/18/2019 2:20 PM Page 42

⚠ CAUTION

If a car window is rolled up with the remote window close but the distance between the remote control and vehicle is changed, the window can stop rolling up. Make sure to operate this function in the vicinity close enough to a vehicle in sight.

If a window is stuck by certain forces while rolling up, it stops working, but the other three windows will continue to roll up. Make sure that the emergency warning light blinks three times and the rest of windows are completely shut down.

ON ENG 4.qxp 3/18/2019 2:20 PM Page 43

HOOD

Opening the hood

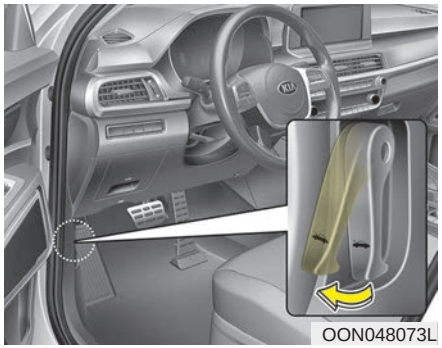
OON048073L

1. Pull the release lever to unlatch the hood. The hood should pop open slightly.

⚠ WARNING

Open the hood after turning off the engine on a flat surface, shifting the shift lever to the P(Park) position for automatic transmission.

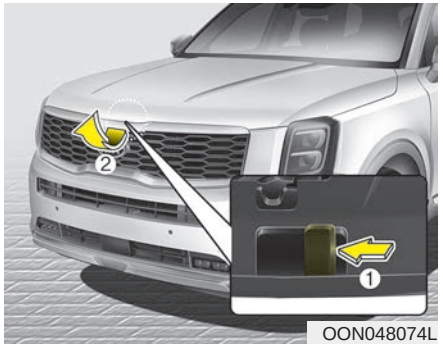

OON048074L

2. Go to the front of the vehicle, raise the hood slightly, push the secondary latch (1) left side and lift the hood (2).
3. Raise the hood. It will completely rise by itself after it has been raised about halfway.

Hood open warning


OON048104L

The hood warning message will appear on the LCD display when hood is open.

The warning chime will operate when the vehicle is being driven at or above 3 km/h (2 mph) with the hood open.

ON ENG 4.qxp 3/18/2019 2:20 PM Page 44

Closing the hood

1. Before closing the hood, check the following:
   - All filler caps in the engine compartment must be correctly installed.
   - Gloves, rags or any other combustible material must be removed from the engine compartment.
2. Lower the hood until it is about 30 cm above the closed position and let it drop. Make sure that it locks into place.
3. Check that the hood has engaged properly. If the hood can be raise slightly, it is not properly engaged. Open it again and close it with a little more force.

⚠ WARNING

- **Before closing the hood, ensure that all obstructions are removed from the hood opening. Closing the hood with an obstruction present in the hood opening may result in property damage or severe personal injury.**
- **Do not leave gloves, rags or any other combustible material in the engine compartment. Doing so may cause a heat-induced fire.**

⚠ WARNING

- **Always double check to be sure that the hood is firmly latched before driving away. If it is not latched, the hood could open while the vehicle is being driven, causing total loss of visibility, which might result in an accident.**
- **Do not move the vehicle with the hood raised. The view will be blocked and the hood could fall or be damaged.**

ON ENG 4.qxp 3/18/2019 2:20 PM Page 45

FUEL FILLER LID

Opening the fuel filler lid



1. To open the fuel filler lid, press the 3 o'clock right center outer edge of the fuel filler lid.

✻ NOTICE

The fuel filler lid will open and close only when all doors are unlocked.

✻ NOTICE

If the fuel filler lid does not open because ice has formed around it, tap lightly or push on the lid to break the ice and release the lid. Do not pry on the lid. If necessary, spray around the lid with an approved de-icer fluid (do not use radiator anti-freeze) or move the vehicle to a warm place and allow the ice to melt.

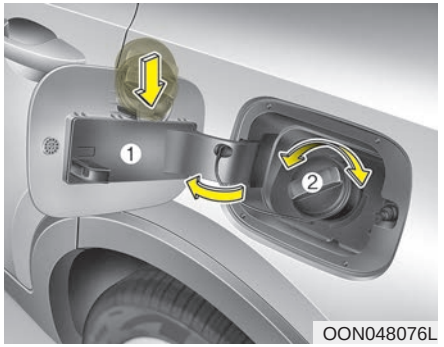

2. Pull the fuel filler lid (1) out to fully open.
3. To remove the fuel tank cap (2), turn it counterclockwise. You may hear a hissing noise as the pressure inside the tank equalizes.
4. Place the cap on the fuel filler lid.

ON ENG 4.qxp 3/18/2019 2:20 PM Page 46

Closing the fuel filler lid

1. To install the cap, turn it clockwise until it “clicks”. This indicates that the cap is securely tightened.
2. To close the fuel filler lid, press the edge of the fuel filler lid.

   Make sure it is securely closed.

⚠ WARNING - Refueling

- **If pressurized fuel sprays out, it can cover your clothes or skin and subject you to the risk of fire and burns. Always remove the fuel cap carefully and slowly. If the cap is venting fuel or if you hear a hissing sound, wait until the condition stops before completely removing the cap.**
- **Do not "top off" after the nozzle automatically shuts off when refueling.**
- **Always check that the fuel cap is installed securely to prevent fuel spillage in the event of an accident.**

⚠ WARNING - Refueling dangers

Automotive fuels are flammable materials. When refueling, please note the following guidelines carefully. Failure to follow these guidelines may result in severe personal injury, severe burns or death by fire or explosion.

- **Read and follow all warning posted at the gas station facility.**
- **Before refueling note the location of the Emergency Gasoline Shut-Off, if available, at the gas station facility.**
- **Before touching the fuel nozzle, you should eliminate potentially dangerous static electricity discharge by touching another metal part of the vehicle, a safe distance away from the fuel filler neck, nozzle, or other gas source.**

(Continued)

(Continued)

- **Do not get back into a vehicle once you have begun refueling since you can generate static electricity by touching, rubbing or sliding against any item or fabric (polyester, satin, nylon, etc.) capable of producing static electricity. Static electricity discharge can ignite fuel vapors resulting in rapid burning. If you must re-enter the vehicle, you should once again eliminate potentially dangerous static electricity discharge by touching a metal part of the vehicle, away from the fuel filler neck, nozzle or other gasoline source.**
- **When using an approved portable fuel container, be sure to place the container on the ground prior to refueling. Static electricity discharge from the container can ignite fuel vapors causing a fire.**

(Continued)

ON ENG 4.qxp 3/18/2019 2:20 PM Page 47

(Continued)

Once refueling has begun, contact with the vehicle should be maintained until the filling is complete.

Use only approved portable plastic fuel containers designed to carry and store gasoline.

- **Do not use cellular phones while refueling. Electric current and/or electronic interference from cellular phones can potentially ignite fuel vapors causing a fire.**
- **When refueling, always shut the engine off. Sparks produced by electrical components related to the engine can ignite fuel vapors causing a fire. Once refueling is complete, check to make sure the filler cap and filler lid are securely closed, before starting the engine.**

(Continued)

(Continued)

- **DO NOT use matches or a lighter and DO NOT SMOKE or leave a lit cigarette in your vehicle while at a gas station especially during refueling. Automotive fuel is highly flammable and can, when ignited, result in fire.**
- **If a fire breaks out during refueling, leave the vicinity of the vehicle, and immediately contact the manager of the gas station and then contact the local fire department. Follow any safety instructions they provide.**

⚠ CAUTION

- ***Make sure to refuel your vehicle according to the "Fuel requirements" suggested in chapter 1.***
- ***If the fuel filler cap requires replacement, please make sure that you use parts designed for replacement in your vehicle.***

  An incorrect fuel filler cap can result in a serious malfunction of the fuel system or emission control system. For more detailed information, Kia recommends to contact an authorized Kia dealer/service partner.
- ***Do not spill fuel on the exterior surfaces of the vehicle. Any type of fuel spilled on painted surfaces may damage the paint.***
- ***After refueling, make sure the fuel cap is installed securely to prevent fuel spillage in the event of an accident.***

ON ENG 4.qxp 3/18/2019 2:20 PM Page 48

DUAL SUNROOF(IF EQUIPPED)



OON048077L

If your vehicle is equipped with a sunroof, you can slide or tilt your sunroof with the sunroof control switch1 (1) located on the overhead console. The blind in the rear seat roof can be opened or closed with the switch (2). The sunroof can be operated for approximately 30 seconds after the Engine Start/Stop button is turned to the ACC or OFF position. However, if the front doors are opened, the sunroof cannot be opened even within the 10 minutes period.

- In cold and wet climates, the sunroof may not work properly due to freezing conditions.
- After the vehicle is washed or in a rainstorm, be sure to wipe off any water that is on the sunroof before operating it.

⚠ CAUTION - Sunroof control lever

Do not continue to move the sunroof control lever after the sunroof is fully opened, closed, or tilted. Damage to the motor or system components could occur.

⚠ CAUTION

Make sure the sunroof is fully closed when leaving your vehicle. If the sunroof is opened, rain or snow may leak through the sunroof and wet the interior as well as cause theft.

⚠ WARNING - Sunroof break

The sunroof, which is made of glass, may break if the sufficient impact is applied. In this case, in an accident, any improperly-belted occupant may be tossed out of the vehicle through the sunroof, possibly resulting injury. To minimize all the possible accident risk, all occupants must be properly belted and, in case of a child, be fastened in a proper child restraint.

⚠ WARNING

- **In order to prevent accidental operation of the sunroof, especially by a child, do not let a child operate the sunroof.**
- **Do not sit on the top of the vehicle. It may cause vehicle damage.**

ON ENG 4.qxp 3/18/2019 2:20 PM Page 49

Sunroof open warning



OON048105L

If the driver turns off the engine when the sunroof is not fully closed, the warning chime will sound for approximately 4 seconds and a message will appear on the LCD display.

Close the sunroof securely when leaving your vehicle.

⚠ WARNING

- **Never adjust the sunroof or sunshade while driving. This could result in loss of control and an accident that may cause death, serious injury, or property damage.**
- **If you would like to carry items on the roof using a cross bar, do not operate the sunroof.**
- **When carrying cargo on the roof, do not load heavy items above the sunroof or glass roof.**
- **Do not allow children to operate the sunroof.**

⚠ CAUTION

Do not extend any luggage out side the sunroof while driving.

Sunshade

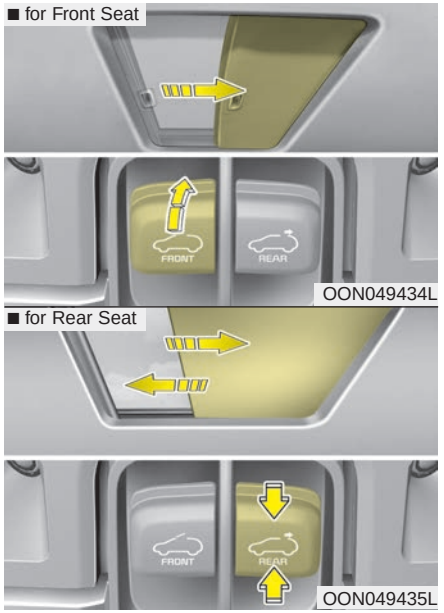

Front seat

Use to block direct sunlight coming through the sunroof glass window.

- Use the sunshade to block sunlight coming through the sunroof glass window.

ON ENG 4.qxp 3/18/2019 2:20 PM Page 50

- To open the sunroof, push the sunroof control switch backward. To close the sunroof, push the sunroof control switch forward, then grab the sunshade handle and move it forward.

Rear seat

To slide open the blind, move the rear blind switch backward.

To slide close the blind, move the rear blind switch forward.

✻ NOTICE

Wrinkles formed on the sunshade as material characteristic are normal.

⚠ CAUTION

- ***Do not pull or push the sunshade by hand. It could cause sunshade failure.***
- ***Close the sunroof when driving through dusty roads. Dust may cause a malfunction of the vehicle system.***

Sliding the sunroof (for front seat)

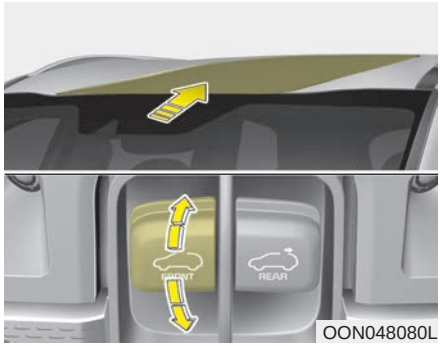

OON048080L

- To open or close the sunroof (manual slide feature), push the sunroof control switch backward or forward to the first detent position.
- To open or close the sunroof (one-touch slide feature), push the sunroof control switch backward or forward to the second detent position. The sunroof will slide all the way open or close. To stop the sunroof sliding at any point, pull or push the sunroof control switch momentarily.

ON ENG 4.qxp 3/18/2019 2:21 PM Page 51

Tilting the sunroof (for front seat)

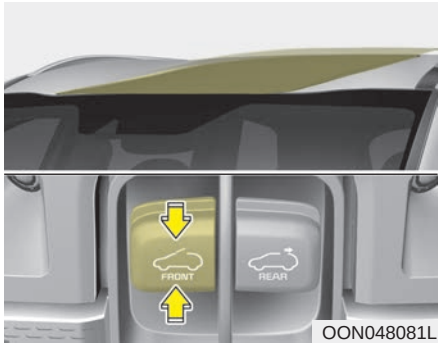

The sunroof will open only while pressing the control switch upward.

Move the control switch forward to close the sunroof.

It will close only while pressing the control switch.

Sliding and tilting do not occur simultaneously. You can not tilt the sunroof while sliding it.

Tilt the sunroof when it is completely closed.

Automatic reversal

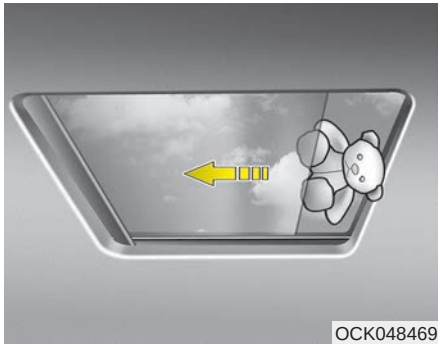

If an object or part of the body is detected while the sunroof glass or sunshade is closing automatically, it will reverse the direction, and then stop.

The auto reverse function does not work if a tiny obstacle is between the sliding glass or sunshade and the sunroof sash. You should always check that all passengers and objects are away from the sunroof before closing it.

⚠ WARNING - Sunroof

- **Be careful that no head, hands and body parts are obstructed by a closing sunroof.**
- **Do not extend the face, neck, arms or body outside the sunroof while driving.**
- **Make sure your hands and head are safely out of the way before closing the sunroof.**
- **A sunroof is made of glass, therefore it may break in an accident. If you do not have your seat belt on, you may stick out of the broken glass and get injured or killed. For all passengers safety, have an appropriate protection on. (ex. seat belt, CRS, etc.)**

ON ENG 4.qxp 3/18/2019 2:21 PM Page 52

⚠ CAUTION

- ***Periodically remove any dirt that may accumulate on the guide rail.***
- ***If you drive with the sunroof opened right after a car wash or rain, water may get inside the vehicle.***

⚠ CAUTION - Sunroof motor damage

If you try to open the sunroof when the temperature is below freezing or when the sunroof is covered with snow or ice, the glass or the motor could be damaged.

Resetting the sunroof

Whenever the vehicle battery is disconnected or discharged, you must reset your sunroof system as follows:

1. Start the engine.
2. Close the sunshade and sunroof completely if it is opened.
3. Release the sunroof control lever.
4. Push the sunroof control lever forward into the direction of close until the sunroof slightly moves. Then, release the lever.
5. Push the sunroof control lever forward into the direction of close, until the sunroof operates as follows again:

   SLIDE OPEN → SLIDE CLOSE

   Then, release the lever.

When this is complete, the sunroof system has been reset.

✻ NOTICE

If you do not reset the sunroof, it may not work properly.

ON ENG 4.qxp 3/18/2019 2:21 PM Page 53

STEERING WHEEL

Electronic power steering

Power steering uses the motor to assist you in steering the vehicle. If the engine is off or if the power steering system becomes inoperative, the vehicle may still be steered, but it will require increased steering effort.

The motor driven power steering is controlled by the power steering control unit which senses the steering wheel torque and vehicle speed to command the motor.

The steering effort becomes heavier as the vehicle's speed increases and becomes lighter as the vehicle's speed decreases for better control of the steering wheel.

Should you notice any change in the effort required to steer during normal vehicle operation, have the system checked by a professional workshop. Kia recommends to visit an authorized Kia dealer/service partner.

✻ NOTICE

The following symptoms may occur during normal vehicle operation:

- **The EPS warning light does not illuminate.**
- **The steering effort is high immediately after turning the Engine Start/Stop Button is ON. This happens as the EPS system performs the diagnostics. When the diagnostics is completed, the steering effort will return to its normal condition.**
- **A click noise may be heard from the EPS relay after the Engine Start/Stop Button is turned to the ON or OFF position.**
- **Motor noise may be heard when the vehicle is at a stop or at a low driving speed.**
- **The steering effort can suddenly increase, if the operation of the EPS system is stopped to prevent serious accidents when EPS control unit detects malfunction of the EPS system by self-diagnosis.**

(Continued)

(Continued)

- **The steering effort increases if the steering wheel is rotated continuously when the vehicle is not in motion. However, after a few minutes, it will return to its normal conditions.**
- **If the Electronic Power Steering System does not operate normally, the warning light will illuminate or blink on the instrument cluster. If the power assistance of steering fails, you will need to use more force to steer. In this case, have the system inspected by a professional workshop. Kia recommends to visit an authorized Kia dealer/service partner.**
- **When you operate the steering wheel in low temperature, abnormal noise could occur. If temperature rises, the noise will disappear. This is a normal condition.**

ON ENG 4.qxp 3/18/2019 2:21 PM Page 54

Tilt & telescopic steering

A tilt and telescopic steering wheel allows you to adjust the steering wheel before you drive. You can also raise it to give your legs more room when you exit and enter the vehicle.

The steering wheel should be positioned so that it is comfortable for you to drive, while permitting you to see the instrument panel warning lights and gauges.

⚠ WARNING

- **Never adjust the angle of the steering wheel while driving. You may lose steering control and cause severe personal injury, death or accidents.**
- **After adjusting, push the steering wheel both up and down to be certain it is locked in position.**

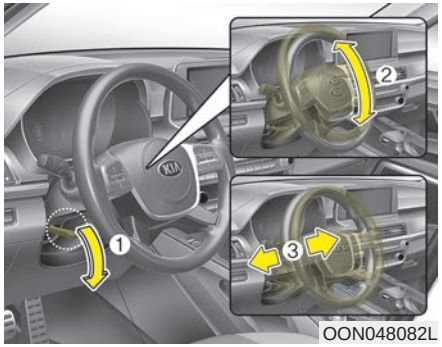

To change the steering wheel angle, pull down the lock release lever (1), adjust the steering wheel to the desired angle (2) and height (3), then pull up the lock-release lever to lock the steering wheel in place. Be sure to adjust the steering wheel to the desired position before driving.

✻ NOTICE

After adjustment, sometimes the lock-release lever may not lock the steering wheel.
It is not a malfunction. This occurs when two gear teeth meet head on engage. In this case, adjust the steering wheel again and then lock the steering wheel.

ON ENG 4.qxp 3/18/2019 2:21 PM Page 55

Heated steering wheel (if equipped)

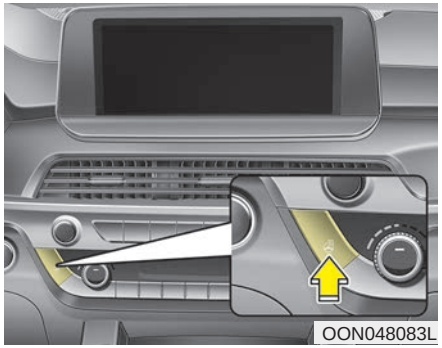

OON048083L

When the Engine Start/Stop Button is in the ON position, pressing the heated steering wheel button warms the steering wheel. The indicator on the button will illuminate.

To turn the heated steering wheel off, press the button once again. The indicator on the button will turn off.

✻ NOTICE

The heated steering wheel will turn off automatically approximately 30 minutes after the heated steering wheel is turned on.

⚠ CAUTION

Do not install any steering wheel cover to operate the steering wheel. This causes damage to the heated steering wheel system.

Horn



OON048084L

To sound the horn, press the area indicated by the horn symbol on your steering wheel (see illustration). The horn will operate only when this area is pressed. Check the horn regularly to be sure it operates properly.

ON ENG 4.qxp 3/18/2019 2:21 PM Page 56

⚠ CAUTION

- ***Do not strike the horn severely to operate it, or hit it with your fist. Do not press on the horn with a sharp-pointed object.***
- ***When cleaning the steering wheel, do not use an organic solvent such as thinner, benzene, alcohole and gasoline. Doing so may damage the steering wheel.***

ON ENG 4.qxp 3/18/2019 2:21 PM Page 57

MIRRORS

Inside rearview mirror

Adjust the rearview mirror so that the center view through the rear window is seen. Make this adjustment before you start driving.

⚠ WARNING - Rear visibility

Do not place objects in the rear seat or cargo area which would interfere with your vision through the rear window.

⚠ WARNING

Do not adjust the rearview mirror while the vehicle is moving. This could result in loss of control, and an accident which could cause death, serious injury or property damage.

⚠ WARNING

Do not modify the inside mirror and don't install a wide mirror. It could result in injury, during an accident or deployment of the air bag.

Day/night rearview mirror (if equipped)

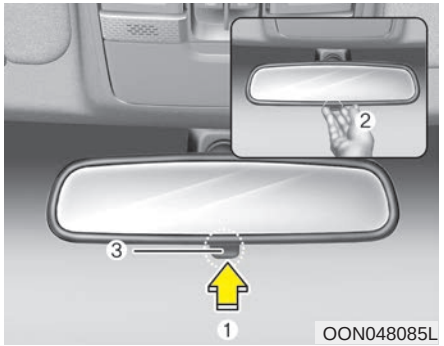

Make this adjustment before you start driving and while the day/night lever(3) is in the day position (1).

Pull the day/night lever(3) toward you (2) to reduce the glare from the headlights of the vehicles behind you during night driving.

Remember that you lose some rearview clarity in the night position.

❈ (1) : Day, (2) : Night

ON ENG 4.qxp 3/18/2019 2:21 PM Page 58

Electrochromic mirror (ECM) (if equipped)



The electric rearview mirror automatically controls the glare from the headlights of the vehicles behind you in nighttime or low light driving conditions. The sensor (3) mounted in the mirror senses the light level around the vehicle, and automatically controls the headlight glare from the vehicles behind you.

When the vehicle is running, the glare is automatically controlled by the sensor mounted in the rearview mirror.

Whenever the drive dial is shifted into reverse (R), the mirror will automatically go to the brightest setting in order to improve the drivers view behind the vehicle.

⚠ CAUTION

When cleaning the mirror, use a paper towel or similar material dampened with glass cleaner. Do not spray glass cleaner directly on the mirror. It may cause the liquid cleaner to enter the mirror housing.

To operate the electric rearview mirror:

- The mirror defaults to the ON position whenever the Engine Start/Stop button is ON.
- Press the ON/OFF button (1) to turn the automatic dimming function off. The mirror indicator light (2) will turn off.

  Press the ON/OFF button (1) to turn the automatic dimming function on. The mirror indicator light (2) will illuminate.

ON ENG 4.qxp 3/18/2019 2:21 PM Page 59

Electrochromic mirror with HomeLink system (if equipped)

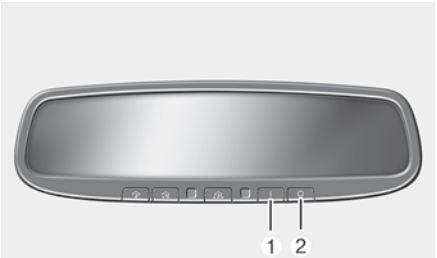

OON048099L

To operate the electric rearview mirror

Press the I button (1) to turn the automatic- dimming function on. The mirror indicator light will illuminate.

Press the O button (2) to turn the automatic- dimming function off. The mirror indicator light will turn off.

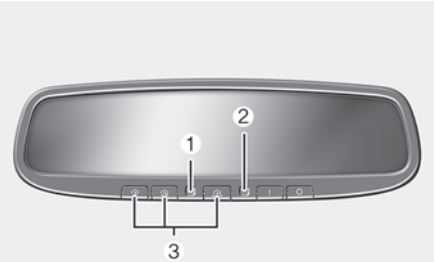

OON048400L

HomeLink® Wireless Control System

Your new mirror comes with an integrated HomeLink Universal Transceiver, which allows you to program the mirror to activate your garage door(s), estate gate, home lighting, etc. The mirror actually learns the codes from your various existing transmitters.

✻① Indicator light
② Glare detection sensor
③ Homelink buttons

Retain the original transmitter for future programming procedures (i.e., new vehicle purchase). It is also suggested that upon the sale of the vehicle, the programmed HomeLink buttons be erased for security purposes (follow step 1 in the “Programming” portion of this text).

ON ENG 4.qxp 3/18/2019 2:21 PM Page 60

Programming

Your vehicle may require the ignition switch to be turned to the ACC position for programming and/or operation of HomeLink. It is also recommended that a new battery be replaced in the hand-held transmitter of the device being programmed to HomeLink for quicker training and accurate transmission of the radio-frequency.

Follow these steps to train your HomeLink mirror:

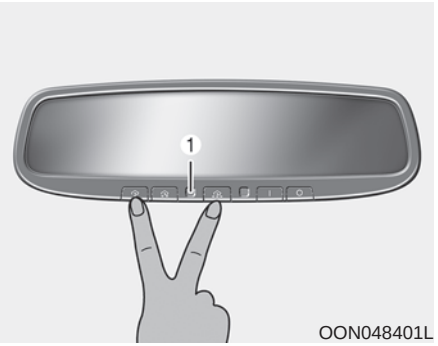

OON048401L

1. When programming the buttons for the first time, press and hold the left and center buttons (,) simultaneously until the indicator light begins to flash after approximately 20 seconds. (This procedure erases the factory-set default codes. Do not perform this step when programming the additional HomeLink buttons.)

✻① Flashing

✻ NOTICE

For non rolling code garage door openers, follow steps 2 - 3.
For rolling code garage door openers, follow steps 2 - 6.
For Canadian Programming, please follow the Canadian Programming section.
For help with determining whether your garage door opener is non-rolling code or rolling code, please refer to the garage door openers owner's manual or contact HomeLink customer service at 1-800-355-3515.

ON ENG 4.qxp 3/18/2019 2:21 PM Page 61

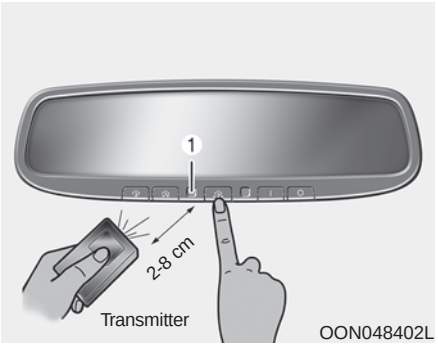

2. Press and hold the button on the HomeLink system you wish to train and the button on the transmitter while the transmitter is approximately 2-8 cm (1 to 3 inches) away from the mirror. Do not release the buttons until step 3 has been completed.
3. The HomeLink indicator light will flash, first slowly and then rapidly. When the indicator light flashes rapidly, both buttons may be released. (The rapid flashing light indicates successful programming of the new frequency signal.)

✻① Flashing

✻ NOTICE

Some gate and garage door openers may require you to replace step #3 with the "cycling" procedure noted in the "Canadian Programming" section of this document.

Rolling code programming

To train a garage door opener (or other rolling code equipped devices) with the rolling code feature, follow these instructions after completing the "Programming" portion of this text. (A second person may make the following training procedures quicker & easier.)

4. Locate the "learn" or "smart" button on the device's motor head unit. Exact location and color of the button may vary by product brand. If there is difficulty locating the "learn" or "smart" button, reference the device's owner's manual or contact HomeLink at 1-800-355-3515 or on the internet at www.homelink.com.
5. Press and release the "learn" or "smart" button on the device's motor head unit. You have 30 seconds to complete step number 6.

ON ENG 4.qxp 3/18/2019 2:21 PM Page 62

6. Return to the vehicle and firmly press and release the programmed HomeLink button up to three times. The rolling code equipped device should now recognize the HomeLink signal and activate when the HomeLink button is pressed. The remaining two buttons may now be programmed if this has not previously been done. Refer to the “Programming” portion of this text.

Operating HomeLink

To operate, simply press the programmed HomeLink button. Activation will now occur for the trained product (garage door, security system, entry door lock, estate gate, or home or office lighting). For convenience, the hand-held transmitter of the device may also be used at any time. The HomeLink Wireless Controls System (once programmed) or the original hand-held transmitter may be used to activate the device (e.g. garage door, entry door lock, etc.). In the event that there are still programming difficulties, contact HomeLink at 1-800-355-3515 or on the internet at www.homelink.com.

Erasing programmed HomeLink buttons

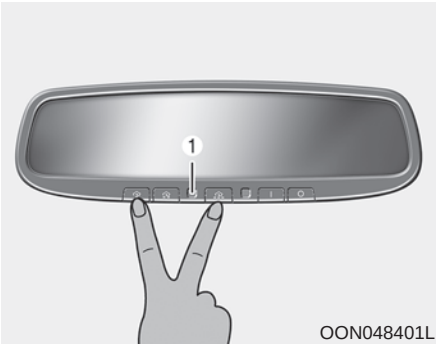

To erase the three programmed buttons (individual buttons cannot be erased):

- Press and hold the left and center buttons simultaneously, until the indicator light begins to flash (approximately 20 seconds). Release both buttons. Do not hold for longer than 30 seconds.

HomeLink is now in the train (or learning) mode and can be programmed at any time.

✻① Flashing

ON ENG 4.qxp 3/18/2019 2:21 PM Page 63

Reprogramming a single HomeLink button

To program a device to HomeLink using a HomeLink button previously trained, follow these steps:

1. Press and hold the desired HomeLink button. Do NOT release until step 4 has been completed.
2. When the indicator light begins to flash slowly (after 20 seconds), position the hand-held transmitter 2-8 cm (1 to 3 inches) away from the HomeLink surface.
3. Press and hold the hand-held transmitter button (or press and “cycle” - as described in “Canadian Programming”).
4. The HomeLink indicator light will flash, first slowly and then rapidly. When the indicator light begins to flash rapidly, release both buttons.

The previous device has now been erased and the new device can be activated by pushing the HomeLink button that has just been programmed. This procedure will not affect any other programmed HomeLink buttons.

Canadian Programming Garage & gate openers

During programming, your hand-held transmitter may automatically stop transmitting. Continue to press and hold the HomeLink button (note steps 2 through 4 in the “Programming” portion of this text) while you press and re-press (“cycle”) your handheld transmitter every two seconds until the frequency signal has been learned. The indicator light will flash slowly and then rapidly after several seconds upon successful training.

Accessories

If you would like additional information on the HomeLink Wireless Control System, HomeLink compatible products, or to purchase other accessories such as the HomeLink® Lighting Package, please contact HomeLink at 1-800-355-3515 or on the internet at www.homelink.com.

ON ENG 4.qxp 3/18/2019 2:21 PM Page 64

Outside rearview mirror

Be sure to adjust the mirror angles before driving.

Your vehicle is equipped with both left-hand and right-hand outside rearview mirrors. The mirrors can be adjusted remotely with the remote switch. The mirror heads can be folded back to prevent damage during an automatic car wash or when passing through a narrow street.

⚠ WARNING - Rearview mirrors

- **The outside rearview mirror is convex. Objects seen in the mirror are closer than they appear.**
- **Use your interior rearview mirror or direct observation to determine the actual distance of following vehicles when changing lanes.**

⚠ CAUTION

Do not scrape ice off the mirror face; this may damage the surface of the glass. If ice should restrict the movement of the mirror, do not force the mirror for adjustment. To remove ice, use a deicer spray, or a sponge or soft cloth with warm water.

⚠ CAUTION

If the mirror is jammed with ice, do not adjust the mirror by force. Use an approved spray de-icer (not radiator antifreeze) to release the frozen mechanism or move the vehicle to a warm place and allow the ice to melt.

⚠ WARNING

Do not adjust or fold the outside rearview mirrors while the vehicle is moving. This could result in loss of control, and an accident which could cause death, serious injury or property damage.

ON ENG 4.qxp 3/18/2019 2:21 PM Page 65

Remote control

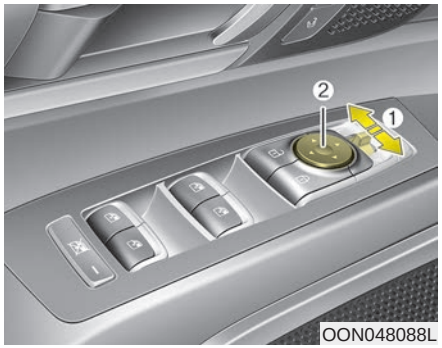

The electric remote control mirror switch allows you to adjust the position of the left and right outside rearview mirrors. To adjust the position of either mirror,move the R or L switch(1) to select the right side mirror or the left side mirror, then press a corresponding point (▲) on the mirror adjustment control (2) to position the selected mirror up, down, left or right.

⚠ CAUTION

- ***The mirrors stop moving when they reach the maximum adjusting angles, but the motor continues to operate while the switch is pressed. Do not press the switch longer than necessary, the motor may be damaged.***
- ***Do not attempt to adjust the outside rearview mirror by hand. Doing so may damage the parts.***

Folding the outside rearview mirror

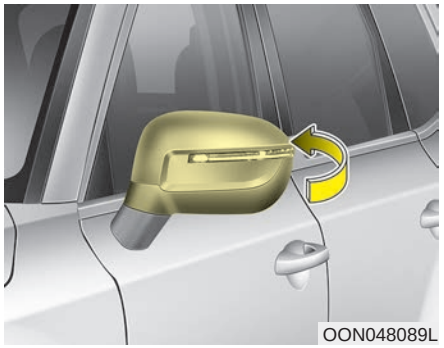

Manual type

To fold the outside rearview mirror, grasp the housing of the mirror and then fold it toward the rear of the vehicle.

ON ENG 4.qxp 3/18/2019 2:21 PM Page 66

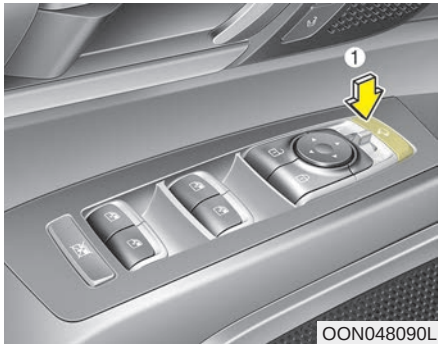

Electric type

The outside rearview mirror can be folded or unfolded by pressing the button (1).

The mirror will fold or unfold automatically as follows:

- The mirror will fold or unfold when the door is locked or unlocked by the smart key.
- The mirror will fold or unfold when the door is locked or unlocked by the button on the outside door handle.
- The mirror will unfold when you approach the vehicle (all doors closed and locked) with a smart key in possession. (if equipped)

⚠ CAUTION

The electric type outside rearview mirror operates even though the Engine Start/Stop button is in the OFF position.

However, to prevent unnecessary battery discharge, do not adjust the mirrors longer than necessary while the engine is not running.

⚠ CAUTION

In case it is an electric type outside rearview mirror, don't fold it by hand. It could cause motor failure.

ON ENG 4.qxp 3/18/2019 2:21 PM Page 67

Reverse parking aid function (if equipped)

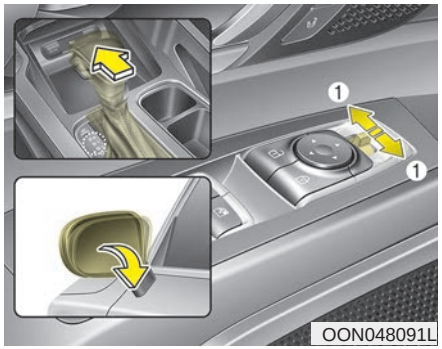

When you shift the shift lever to the R (Reverse) position, the outside rearview mirror(s) will move downward to aid reverse parking. According to the position of the outside rearview mirror switch, the outside rearview mirror(s) will operate as follows:

Left or Right

When the remote control outside rearview mirror switch is in the left or right position, both outside rearview mirrors will move downward.

Neutral

When neither switch is selected, the outside rearview mirrors will not move.

The outside rearview mirrors will automatically revert to their original positions under the following conditions:

1. Engine Start/Stop button is turned to the ACC or OFF position.
2. The shift lever is moved to any position except R (Reverse).
3. The remote control outside rearview mirror switch is not selected.

ON ENG 4.qxp 3/18/2019 2:21 PM Page 68

INSTRUMENT CLUSTER

■ **Type A**



■ **Type B**



1. Tachometer
2. Speedometer
3. Engine coolant temperature gauge
4. Fuel gauge
5. Warning and indicator lights
6. LCD display

❈ The actual cluster in the vehicle may differ from the illustration.
For more details, refer to the “Gauges” in this chapter.

OON048100L/OON048101L

ON ENG 4.qxp 3/18/2019 2:21 PM Page 69

Instrument Cluster Control

Adjusting Instrument Cluster Illumination

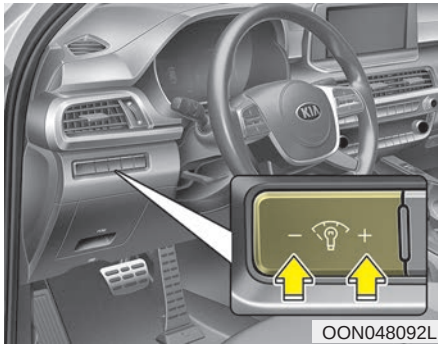

⚠ WARNING

Never adjust the instrument cluster while driving. This could result in loss of control and lead to an accident that may cause death, serious injury, or property damage.

The brightness of the instrument panel illumination is changed by pressing the illumination control button (“+” or “-”) when Engine Start/Stop button is ON, or the tail lights are turned on.



- If you hold the illumination control button (“+” or “-”), the brightness will be changed continuously.
- If the brightness reaches to the maximum or minimum level, an alarm will sound.

ON ENG 4.qxp 3/18/2019 2:21 PM Page 70

Gauges

Speedometer



OON048107L

The speedometer indicates the speed of the vehicle and is calibrated in miles per hour (mph) and/or kilometers per hour (km/h).

Tachometer



OON048108L

The tachometer indicates the approximate number of engine revolutions per minute (rpm).

Use the tachometer to select the correct shift points and to prevent lugging and/or over-revving the engine.

⚠ CAUTION

Do not operate the engine within the tachometer's RED ZONE. This may cause severe engine damage.

Engine Coolant Temperature Gauge



OON048109L

This gauge indicates the temperature of the engine coolant when the Engine Start/Stop Button is ON.

ON ENG 4.qxp 3/18/2019 2:22 PM Page 71

⚠ CAUTION

If the gauge pointer moves beyond the normal range area toward the "H" position, it indicates overheating that may damage the engine.

Do not continue driving with an overheated engine. If your vehicle overheats, refer to "If the Engine Overheats" in chapter 6.

⚠ WARNING

Never remove the radiator cap when the engine is hot. The engine coolant is under pressure and could severely burn. Wait until the engine is cool before adding coolant to the reservoir.

Fuel Gauge



OON048110L

This gauge indicates the approximate amount of fuel remaining in the fuel tank.

✻ NOTICE

- **The fuel tank capacity is given in chapter 8.**
- **The fuel gauge is supplemented by a low fuel warning light, which will illuminate when the fuel tank is nearly empty.**
- **On inclines or curves, the fuel gauge pointer may fluctuate or the low fuel warning light may come on earlier than usual due to the movement of fuel in the tank.**

ON ENG 4.qxp 3/18/2019 2:22 PM Page 72

⚠ WARNING - Fuel Gauge

Running out of fuel can expose vehicle occupants to danger.

You must stop and obtain additional fuel as soon as possible after the warning light comes on or when the gauge indicator comes close to the "E (Empty)" level.

⚠ CAUTION

Avoid driving with an extremely low fuel level. Running out of fuel could cause the engine to misfire damaging the catalytic converter.

Odometer



OSK3048112L

The odometer Indicates the total distance that the vehicle has been driven and should be used to determine when periodic maintenance should be performed.

- Odometer range : 0 ~ 1,599,999 km or 0 ~ 999,999 mi

Outside Temperature



OSK3048113L

This gauge indicates the current outside air temperatures by 1°C (1°F).

- Temperature range : -40°C ~ 60°C (-40°F ~ 140°F)

The outside temperature on the display may not change immediately like a general thermometer to prevent the driver from being inattentive.

The temperature unit can be changed by using the "User Settings" mode of the LCD display.

❊ For more details, refer to "LCD Display" in this chapter.

ON ENG 4.qxp 3/18/2019 2:22 PM Page 73

Transmission Shift Indicator

Automatic Transmission Shift Indicator



OSK3048128L

This indicator displays which automatic transmission shift lever is selected.

- Park : P
- Reverse : R
- Neutral : N
- Drive : D
- Sports Mode : 1, 2, 3, 4, 5, 6, 7, 8

ON ENG 4.qxp 3/18/2019 2:22 PM Page 74

LCD DISPLAY

LCD Display Control

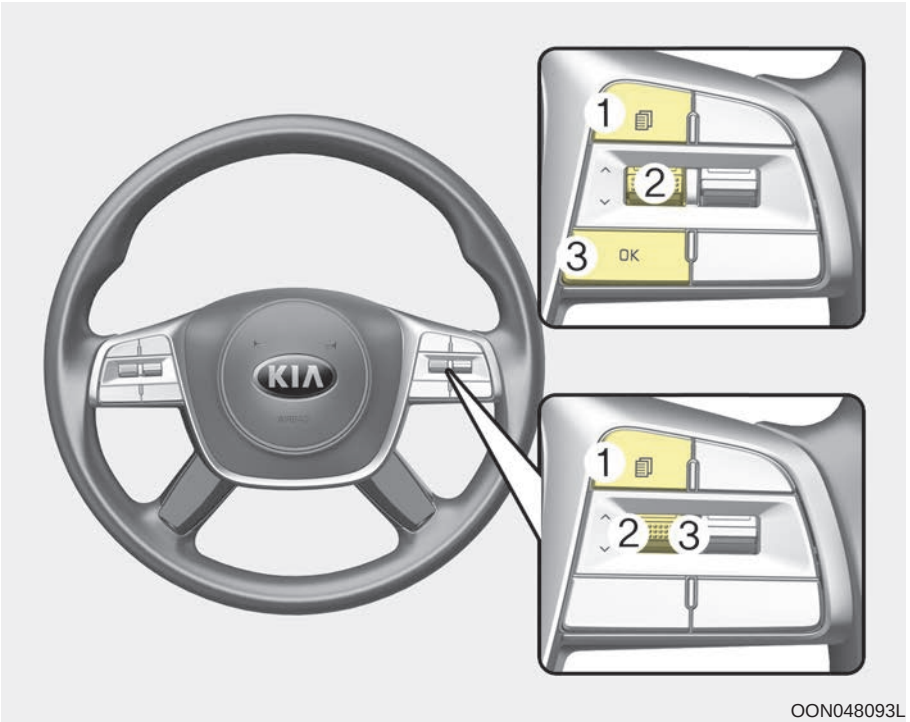

OON048093L

The LCD display modes can be changed by using the control buttons.

(1) : MODE button for changing modes

(2) ∧/∨: MOVE switch for changing items

(3) OK : SELECT/RESET button for setting or resetting the selected item

ON ENG 4.qxp 3/18/2019 2:22 PM Page 75

LCD Display Modes

	Mode				
	Trip Computer	TBT	Assist	User Settings	Master warning
Up/Down	Fuel Economy	Route Guidance	Lane Safety	Head-up display	The Master Warning mode displays warning messages related to the vehicle when one or more systems is not operating normally.
	Accumulated Info	Destination Info	Driver Attention Warning	Driver Assistance	
	Drive Info		AWD	Door	
	Speedometer		TPMS	Lights	
	Drive Mode			Sound	
				Convenience	
				Service Interval	
				Other features	
				Language	
				Reset	

ON ENG 4.qxp 3/18/2019 2:22 PM Page 76

Trip computer mode

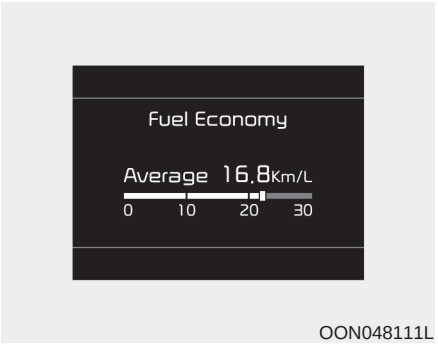

OON048111L

The trip computer mode displays information related to vehicle driving parameters including fuel economy, tripmeter information and vehicle speed.

❈ For more details, refer to “Trip Computer” in this chapter.

Turn By Turn (TBT) mode

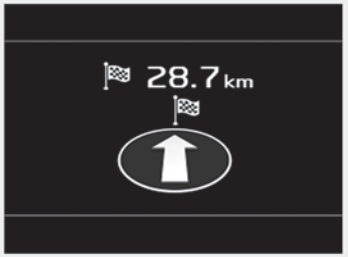

OSK3048115L

This mode displays the state of the navigation.

Assist mode



OON048112L

This mode displays the state of :

- Lane Safety system
- Driver Attention Warning (DAW)
- AWD
- Tire Pressure

❈ For more details, refer to each system information in chapter 5.

Tire pressure status

❈ For more details, refer to “Tire Pressure Monitoring System (TPMS)” in chapter 6.

ON ENG 4.qxp 3/18/2019 2:22 PM Page 77

Master warning mode



OON048113L

This warning light informs the driver the following situations.

- LED headlamp malfunction (if equipped)
- Lamp malfunction
- High Beam Assist malfunction (if equipped)

At this time, a Master Warning icon (⚠) will appear beside the User Settings icon (⚙), on the LCD display.

If the warning situation is solved, the master warning light will be turned off and the Master Warning icon will disappear.

User settings mode

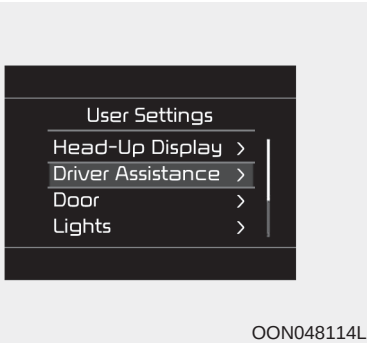

OON048114L

In this mode, you can change the settings of the instrument cluster, doors, lamps, etc.

1. Head-up display
2. Driver Assistance
3. Door
4. Lights
5. Sound
6. Convenience
7. Service Interval
8. Other features
9. Language
10. Reset

The information provided may differ depending on which functions are applicable to your vehicle.

ON ENG 4.qxp 3/18/2019 2:22 PM Page 78



OON048115L

Shift to P to edit settings

This warning message appears if you try to adjust the User Settings while driving.

For your safety, change the User Settings after parking the vehicle, applying the parking brake and moving the shift lever to P (Park).

ON ENG 4.qxp 3/18/2019 2:22 PM Page 79

1. Head-up display (if equipped)

Items	Explanation
Enable Head-Up Display	If this item checked, the Head-Up display will be activated.
Display Height	Adjust the height (1 ~ 20) of the HUD image on the HUD screen.
Rotation	Adjust the degree (-5 ~ +5) of the HUD rotation.
Brightness	Adjust the intensity (1 ~ 20) of the HUD brightness.
Contents Selection	If below items are checked, the items will be activated. - Turn by Turn - Traffic Info - Driving Assist Info - Lane Safety Info - Blind-Spot Safety Info - AV Info
Speedometer size	Small/ Medium/Large
Speedometer color	White/Orange/Green

ON ENG 4.qxp 3/18/2019 2:22 PM Page 80

2. Driver Assistance (if equipped)

Items	Explanation
SCC response	• Slow / Normal / Fast To adjust the sensitivity of the Smart Cruise Control system. ❉ For more details, refer to “Smart Cruise Control with Stop & Go” in chapter 5.
Driving Assist	• Leading vehicle departure alert/ LFA To select the functions.
Driver Attention Warning	• Driver Attention Warning • To select the function. High sensitivity/Normal sensitivity/Off To adjust the sensitivity of the Driver Attention Warning. ❉ For more details, refer to the “DAW (Driver Attention Warning)” in chapter 6.
Warning timing	• Normal/ Later To select the Warning time
Warning volume	• High/ Medium/ Normal To select the Warning volume
Lane Safety	• Lane Keeping Assist/Lane Departure Warning/Off To select the functions.
Forward Safety	• Active assist, Warning only, Off To select the functions.

❉ The information provided may differ depending on which functions are applicable to your vehicle.

ON ENG 4.qxp 3/18/2019 2:22 PM Page 81

Items	Explanation
Blind-spot safety	• Blind-Spot view • Safe Exit Assist(SEA) • Active Assist • Warning Only • Off To select the functions.
Parking safety	• Rear Cross-Traffic Safety: You can turn on/off the Rear Cross-Traffic Collision Warning (RCCW) and Rear Cross-Traffic Collision-Avoidance Assist (RCCA) system. With the system on, if there is a vehicle approaching from the rear side when reversing, it helps you avoid collision through warning and control. ❈ For more details, refer to “Rear Cross-Traffic Collision Warning (RCCW) system and Rear Cross-Traffic Collision-Avoidance Assist (RCCA) system” in chapter 5.

❈ The information provided may differ depending on which functions are applicable to your vehicle.

ON ENG 4.qxp 3/18/2019 2:22 PM Page 82

3. Door

Items	Explanation
Automatically Lock	• Enable on speed: All doors will be automatically locked when the vehicle speed exceeds 15 km/h (9.3 mph). • Enable on shift: All doors will be automatically locked if the vehicle is shifted from the P (Park) position to the R (Reverse), N (Neutral), or D (Drive) position.
Automatically Unlock	• Disable : The auto door unlock operation will be canceled. • Vehicle Off : All doors will be automatically unlocked when the Engine Star/Stop button is set to the OFF position. • On shift to P : All doors will be automatically unlocked if the gear is shifted to the P (Park) position.
Power Tailgate (if equipped)	• If this item is checked, the power tailgate function will be activated. ❉ For more details, refer to “Power Tailgate” in this chapter.
Power Tailgate Speed (if equipped)	• Normal/ Fast You can select the operating speed of the power tailgate.
Smart Tailgate (if equipped)	• If this item is checked, the smart tailgate function will be activated. If the power tailgate function is not activated, you cannot activate this function. ❉ For more details, refer to “Smart Tailgate” in this chapter.

❉ The information provided may differ depending on which functions are applicable to your vehicle.

ON ENG 4.qxp 3/18/2019 2:22 PM Page 83

4. Lights

Items	Explanation
One touch turn signal	• Off : The one touch turn signal function will be deactivated. • 3, 5, 7 Flashes : The turn signal indicator will blink 3, 5, or 7 times when the turn signal lever is moved slightly. ❈ For more details, refer to “Lighting” in this chapter.
Ambient Light Brightness	• Adjust the brightness of the Ambient light. - Off/Level 1,2,3,4
Ambient Light Color	• Select the color of the ambient light. - white, yellow, red, bluegreen,blue, violet
Head Lamp Delay	If this item checked, the head lamp delay function will be activated.

❈ The information provided may differ depending on which functions are applicable to your vehicle.

5. Sound

Items	Explanation
Welcome sound	• If this item checked, the welcome sound function will be activated.

❈ The information provided may differ depending on which functions are applicable to your vehicle.

ON ENG 4.qxp 3/18/2019 2:22 PM Page 84

6. Convenience (if equipped)

Items	Explanation
Seat (forward/backward) Easy Access (if equipped)	- Off : The seat easy access function will be deactivated. - Normal/Extended : When you turn off the engine, the driver's seat will automatically move rear 7.6 cm (Enhanced) for you to enter or exit the vehicle more comfortably. If you change the Engine Start/Stop Button from OFF position to the AC function, the driver's seat will return to the original position. ❈ For more details, refer to "Driver Position Memory System" in chapter 3.
Seat (upward/downward) Easy Access (if equipped)	• To activate or deactivate Seat (upward/downward) Easy Access.
Rear Occupant Alert (if equipped)	• To activate or deactivate the Rear Occupant Alert. ❈ For more details, refer to "Rear Occupant Alert (ROA) system" in this chapter.
Welcome Mirror/Light	• On door unlock/On door approach You can choose one of these two functions.
Wiper/Lights Display	• If this item checked, the Wiper/Lights Display will be activated.
Auto rear wiper (reverse)	• If this item checked, the Auto rear wiper will be activated.
Gear Position Pop-up	• If this item is checked, the Gear position pop-up display will be activated.
Icy road warning	• If this item is checked, the Icy road warning display will be activated.

❈ The information provided may differ depending on which functions are applicable to your vehicle.

ON ENG 4.qxp 3/18/2019 2:22 PM Page 85

7. Service Interval

Items	Explanation
Enable Service Interval	If this item is checked, the Service Interval function will be activated.
Adjust Interval	If the service interval menu is activated, you may adjust the time and distance.
Reset	To reset the service interval function.

If the service interval is activated and the time and distance is adjusted, messages are displayed in the following situations each time the vehicle is turned on.

- Service in: Displayed to inform the driver the remaining mileage and days to service.
- Service required: Displayed when the mileage and days to service has been reached or passed.

If any of the following conditions occur, the mileage and number of days to service may be incorrect.

- The battery cable is disconnected.
- The battery is discharged.

ON ENG 4.qxp 3/18/2019 2:22 PM Page 86

8. Other features (if equipped)

Items	Explanation
Fuel Economy Auto Reset	• If this item checked, the average fuel economy will reset automatically after refueling or after ignition.
Speed Unit	• km/h, MPH To select Speed unit.
Fuel Economy Unit	• Km/L, L/100Km To select the Fuel economy unit. ❈ For more details, refer to "Trip Computer" in this chapter.
Temperature Unit	• °C/°F To select the Temperature unit.
Tire Pressure Unit	• psi, kPa, bar To select the Tire Pressure Unit

❈ The information provided may differ depending on which functions are applicable to your vehicle.

ON ENG 4.qxp 3/18/2019 2:22 PM Page 87

9. Language (if equipped)

Items	Explanation
Language	• To select language.

10. Reset

Items	Explanation
Reset	You can reset the menus in the User Settings mode. All menus in the User Settings mode are reset to factory settings, except language and service interval..

ON ENG 4.qxp 3/18/2019 2:22 PM Page 88

Trip information (Trip computer)

The trip computer is a microcomputer-controlled driver information system that displays information related to driving.

✻ NOTICE

Some driving information stored in the trip computer resets if the battery is disconnected.

Trip Modes

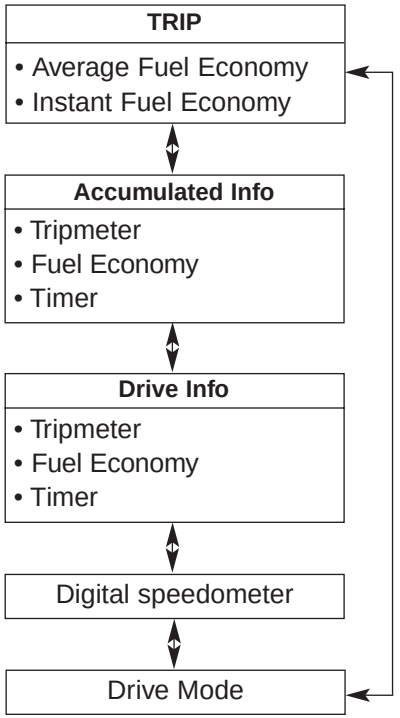

To change the trip mode, scroll the toggle the switch (∧/∨) on the steering wheel.

Fuel Economy

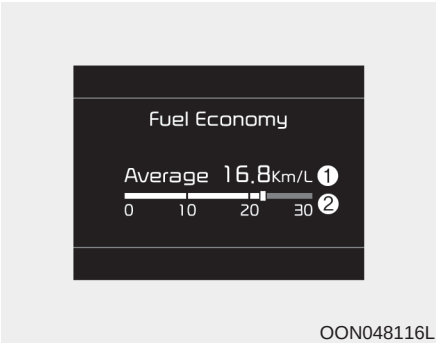

OON048116L

Average Fuel Economy (1)

- The average fuel economy is calculated by the total driving distance and fuel consumption since the last average fuel economy reset.
  - Fuel economy range:
    0 ~ 99.9km/L, L/100 km or MPG
- The average fuel economy can be reset both manually and automatically.

ON ENG 4.qxp 3/18/2019 2:22 PM Page 89

Manual reset

To clear the average fuel economy manually, press the OK button on the steering wheel for more than 1 second when the average fuel economy is displayed.

Automatic reset

To make the average fuel economy be reset automatically whenever refueling, select the “Fuel economy auto reset” mode in User Setting menu of the LCD Windows (Refer to “LCD Windows”).

- OFF - You may set to default manually by using the trip switch reset button.
- After ignition - The vehicle will automatically set to default once 4 hours pass after the Ignition is in OFF.
- After refueling - After refueling more than 6 liters and driving over 1km/h, the vehicle will reset to default automatically.

✻ NOTICE

The average fuel economy is not displayed for more accurate calculation if the vehicle does not drive more than 10 seconds or 50 meters (0.03 miles) since Engine Start/Stop button is turned to ON.

Instant Fuel Economy (2)

- This mode displays the instant fuel economy during the last few seconds when the vehicle speed is more than 10 km/h (6.2 MPH).
  - Fuel economy range:
    0.0 ~ 30km/L, L/100km or
    0.0 ~ 50.0 MPG

ON ENG 4.qxp 3/18/2019 2:22 PM Page 90

Accumulated driving information mode

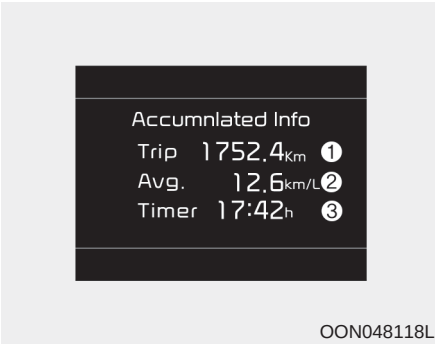

OON048118L

This display shows the accumulated trip distance (1), the average fuel efficiency (2), and the total driving time (3).

- Accumulated information is calculated after the vehicle has run for more than 300 meters.
- If you press "OK" button for more than 1 second after the Cumulative Information is displayed, the information will be reset.
- If the engine is running, even when the vehicle is not in motion, the information will be accumulated.

One time driving information mode

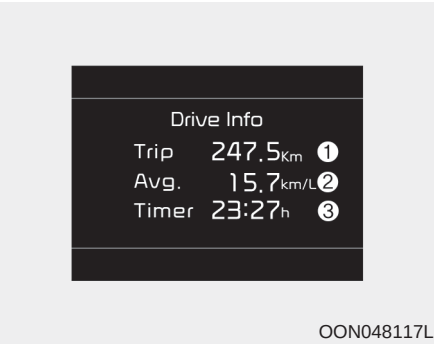

OON048117L

This display shows the trip distance (1), the average fuel efficiency (2), and the total driving time (3) information once per one ignition cycle.

- Fuel efficiency is calculated after the vehicle has run for more than 300 meters.
- The Driving Information will be reset 4 hours after ignition has been turned off. So, when the vehicle ignition is turned on within 4 hours, the information will not be reset.
- If you press "OK" button for more than 1 second after the Driving Information is displayed, the information will be reset.
- If the engine is running, even when the vehicle is not in motion, the information will be accumulated.

ON ENG 4.qxp 3/18/2019 2:22 PM Page 91

Digital speedometer



OBD048146L

This mode displays the current speed of the vehicle.

Service Mode

Service in

It calculates and displays when you need a scheduled maintenance service (mileage or days).

If the remaining mileage or time reaches 1,500 km (900 mi.) or 30 days, “Service in” message is displayed for several seconds each time you set the Engine Start/Stop Button to the ON position.

Service required

If you do not have your vehicle serviced according to the already inputted service interval, “Service required” message is displayed for several seconds each time you set the Engine Start/Stop Button to the ON position.

To reset the service interval to the mileage and days you inputted before:

- Press the OK button (Reset) for more than 1 second.

✻ NOTICE

If any of the following conditions occurs, the mileage and days may be incorrect.

- The battery cable is disconnected.
- The battery is discharged.

ON ENG 4.qxp 3/18/2019 2:22 PM Page 92

LCD Display Messages

Driving info display

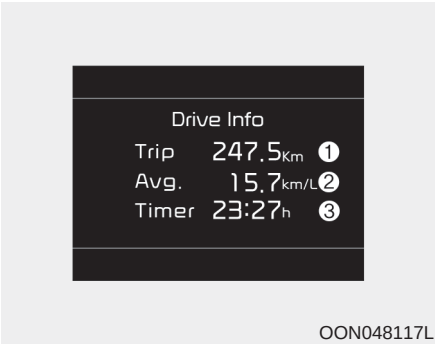

OON048117L

At the end of each driving cycle, the Driving Info message is displayed.

This display shows the trip distance (1), average fuel economy (2), driving time (3).

This information is displayed for a few seconds when you turn off the vehicle, and then goes off automatically. The information is calculated for each time the vehicle is turned on.

✻ NOTICE

- **If sunroof open warning is displayed in the cluster, the Driving Information message may not be displayed.**
- **To set the charging time and/or climate time, refer to a separately supplied car navigation system manual for detailed information.**



OON048119L

Door, hood, tailgate open

- This warning is displayed indicating which door, or the hood, or the tailgate is open.

ON ENG 4.qxp 3/18/2019 2:22 PM Page 93



OON048120L

Sunroof open (if equipped)

- This warning is displayed if you turn off the engine when the sunroof is open.



OON048121L

Lights mode

This indicator displays which exterior light is selected using the lighting control.

You can activate or deactivate Wiper/Lights Display function from the User Settings mode in the cluster LCD display.



OON048122L

Wiper mode

This indicator displays which wiper speed is selected using the wiper control.

You can activate or deactivate Wiper/Lights Display function from the User Settings mode in the cluster LCD display.

ON ENG 4.qxp 3/18/2019 2:22 PM Page 94

Engine has overheated

- This warning message illuminates when the engine coolant temperature is above 120°C (248°F). This mean that the engine is overheated and may be damaged.

❈If your vehicle is overheated, refer to “Overheating” in chapter 6.

Low Key Battery

- This warning message illuminates if the battery of the smart key is discharged when the Engine Start/Stop Button changes to the OFF position.

Press START button while turning wheel

- This warning message illuminates if the steering wheel does not unlock normally when the Engine Start/Stop Button is pressed.
- It means that you should press the Engine Start/Stop Button while turning the steering wheel right and left.

Steering wheel unlocked

- This warning message illuminates if the steering wheel does not lock when the Engine Start/Stop Button changes to the OFF position.

Check Steering Wheel Lock System

- This warning message illuminates if the steering wheel does not lock normally when the Engine Start/Stop Button changes to the OFF position.

Key not in vehicle

- This warning message illuminates if the smart key is not in the vehicle when you press the Engine Start/Stop Button.
- It means that you should always have the smart key with you.

Key not detected

- This warning message illuminates if the smart key is not detected when you press the Engine Start/Stop Button.

ON ENG 4.qxp 3/18/2019 2:22 PM Page 95

Shift to P or N to start engine

- This warning message illuminates if you try to start the engine with the shift lever not in the P (Park) or N (Neutral) position.

Press brake pedal to start engine

- This warning message illuminates if the Engine Start/Stop Button changes to the ACC position twice by pressing the button repeatedly without depressing the brake pedal.
- It means that you should depress the brake pedal to start the engine

Battery discharging due to external electrical devices

The vehicle can detect self-discharge of the battery due to over-current that is generated by unauthorized electrical devices such as black box mounting during parking.

If the warning continues even after external electrical devices are removed, have your vehicle inspected by a professional workshop. Kia recommends to contact an authorized Kia dealer/service partner.

Press START button again

- This warning message illuminates if you can not operate the Engine Start/Stop Button when there is a problem with the Engine Start/Stop Button system.
- It means that you could start the engine by pressing the Engine Start/ Stop Button once more.
- If the warning illuminates each time you press the Engine Start/Stop Button, have the vehicle inspected by a professional workshop. Kia recommends to visit an authorized Kia dealer/service partner.

ON ENG 4.qxp 3/18/2019 2:22 PM Page 96

Press START button with key

- This warning message illuminates if you press the Engine Start/Stop Button while the warning message “Key not detected” is illuminating.
- At this time, the immobilizer indicator light blinks.

Check DAW System

This warning message is displayed if there is a problem with the Driver Attention Warning System. In this case, have the vehicle inspected by a professional workshop. Kia recommends to visit an authorized Kia dealer/service partner.

❈For more information, refer to “Driver Attention Warning (DAW)” in chapter 5.

Check BCW System

This warning message is displayed if there is a problem with the Blind-Spot Collision Warning (BCW) system. In this case, have the vehicle inspected by a professional workshop. Kia recommends to visit an authorized Kia dealer/service partner.

❈For more information, refer to “Blind-Spot Collision Warning (BCW)” in chapter 5.

Icy Road Warning (if equipped)



OON048123L

This warning is to warn the driver the road may be icy.

When the following conditions occur, the warning light (including Outside Temperature Gauge) blinks 5 times and then illuminates, and also warning chime sounds once.

- The temperature on the Outside Temperature Gauge is below approximately 4°C (40°F).

ON ENG 4.qxp 3/18/2019 2:22 PM Page 97

✻ NOTICE

If the icy road warning appears while driving, you should drive more attentively and safely refraining from over-speeding, rapid acceleration, sudden braking or sharp turning, etc.

ON ENG 4.qxp 3/18/2019 2:22 PM Page 98

WARNING AND INDICATOR LIGHTS

Warning lights

✻ NOTICE - Warning lights

Make sure that all warning lights are OFF after starting the engine. If any light is still ON, this indicates a situation that needs attention.

Air bag Warning Light



This warning light illuminates:

- Once you set the Engine Start/Stop Button to the ON position.
  - It illuminates for approximately 6 seconds and then goes off.
- When there is a malfunction with the SRS.

  In this case, have the vehicle inspected by a professional workshop. Kia recommends to visit an authorized Kia dealer/service partner.

Seat Belt Warning Light



This warning light informs the driver that the seat belt is not fastened.

❇For more details, refer to the “Seat Belts” in chapter 3.

ON ENG 4.qxp 3/18/2019 2:23 PM Page 99

Parking Brake & Brake Fluid Warning Light



This warning light illuminates:

- Once you set the Engine Start/Stop Button to the ON position.
  - It illuminates for approximately 3 seconds
  - It remains on if the parking brake is applied.
- When the parking brake is applied.
- When the brake fluid level in the reservoir is low.
  - If the warning light illuminates with the parking brake released, it indicates the brake fluid level in reservoir is low.

If the brake fluid level in the reservoir is low:

1. Drive carefully to the nearest safe location and stop your vehicle.
2. With the engine stopped, check the brake fluid level immediately and add fluid as required (For more details, refer to “Brake Fluid” in chapter 7). Then check all brake components for fluid leaks. If any leak on the brake system is still found, the warning light remains on, or the brakes do not operate properly, do not drive the vehicle.

   In this case, have the vehicle towed to a professional workshop and inspected.

   Kia recommends to visit an authorized Kia dealer/service partner.

Dual-diagonal braking system

Your vehicle is equipped with dual-diagonal braking systems. This means you still have braking on two wheels even if one of the dual systems should fail.

With only one of the dual systems working, more than normal pedal travel and greater pedal pressure are required to stop the vehicle.

Also, the vehicle will not stop in as short a distance with only a portion of the brake system working.

If the brakes fail while you are driving, shift to a lower gear for additional engine braking and stop the vehicle as soon as it is safe to do so.

ON ENG 4.qxp 3/18/2019 2:23 PM Page 100

⚠ WARNING - Parking Brake & Brake Fluid Warning Light

Driving the vehicle with a warning light ON is dangerous. If the Parking Brake & Brake Fluid Warning Light illuminates with the parking brake released, it indicates that the brake fluid level is low.

In this case, have the vehicle inspected by a professional workshop. Kia recommends to visit an authorized Kia dealer/service partner.

Anti-lock Brake System (ABS) Warning Light



This warning light illuminates:

- Once you set the Engine Start/Stop Button to the ON position.
  - It illuminates for approximately 3 seconds and then goes off.
- When there is a malfunction with the ABS (The normal braking system will still be operational without the assistance of the anti-lock brake system).

  In this case, have the vehicle inspected by a professional workshop. Kia recommends to visit an authorized Kia dealer/service partner.

Electronic Brake force Distribution (EBD) System Warning Light



These two warning lights illuminate at the same time while driving:

- When the ABS and regular brake system may not work normally.

  In this case, have the vehicle inspected by a professional workshop. Kia recommends to visit an authorized Kia dealer/service partner.

ON ENG 4.qxp 3/18/2019 2:23 PM Page 101

⚠ WARNING - Electronic Brake force Distribution (EBD) System Warning Light

When both ABS and Parking Brake & Brake Fluid Warning Lights are on, the brake system will not work normally and you may experience an unexpected and dangerous situation during sudden braking.

In this case, avoid high speed driving and abrupt braking.

Have the vehicle inspected by a professional workshop as soon as possible. Kia recommends to visit an authorized Kia dealer/service partner.

✻ NOTICE - Electronic Brake force Distribution (EBD) System Warning Light

When the ABS Warning Light is on or both ABS and Parking Brake & Brake Fluid Warning Lights are on, the speedometer, odometer, or trip-meter may not work. Also, the EPS Warning Light may illuminate and the steering effort may increase or decrease.
In this case, have the vehicle inspected by a professional workshop. Kia recommends to visit an authorized Kia dealer/service partner.

Electronic Power Steering (EPS) Warning Light (if equipped)



This warning light illuminates:

- When the Engine Start/Stop button is turned to ON, the warning light illuminates for about 3 seconds and turns off automatically if no problem.
- When the warning light illuminates while driving, it indicates that there is a problem with the electric power steering system. In this case, have the vehicle inspected by a professional workshop. Kia recommends to visit an authorized Kia dealer/service partner.

ON ENG 4.qxp 3/18/2019 2:23 PM Page 102

Malfunction Indicator Lamp (MIL)



This warning light illuminates:

- Once you set the Engine Start/Stop Button to the ON position.
  - It remains on until the engine is started.
- When there is a malfunction with the emission control system.

  In this case, have the vehicle inspected by a professional workshop. Kia recommends to visit an authorized Kia dealer/service partner.

⚠ CAUTION - Malfunction Indicator Lamp (MIL)

Driving with the Malfunction Indicator Lamp (MIL) on may cause damage to the emission control systems which could effect drivability and/or fuel economy.

⚠ CAUTION

If the Malfunction Indicator Lamp (MIL) illuminates, potential catalytic converter damage is possible which could result in loss of engine power.

In this case, have the vehicle inspected by a professional workshop. Kia recommends to visit an authorized Kia dealer/service partner.

Charging System Warning Light



This warning light illuminates:

- Once you set the Engine Start/Stop Button to the ON position.
  - It remains on until the engine is started.
- When there is a malfunction with either the alternator or electrical charging system.

ON ENG 4.qxp 3/18/2019 2:23 PM Page 103

If there is a malfunction with either the alternator or electrical charging system:

1. Drive carefully to the nearest safe location and stop your vehicle.
2. Turn the engine off and check the alternator drive belt for looseness or breakage.

   If the belt is adjusted properly, there may be a problem in the electrical charging system.

   In this case, have the vehicle inspected by a professional workshop as soon as possible.

   Kia recommends to visit an authorized Kia dealer/service partner.

Engine Oil Pressure Warning Light



This warning light illuminates:

- Once you set the Engine Start/Stop Button to the ON position.
  - It remains on until the engine is started.
- When the engine oil pressure is low.

If the engine oil pressure is low:

1. Drive carefully to the nearest safe location and stop your vehicle.
2. Turn the engine off and check the engine oil level (For more details, refer to “Engine Oil” in chapter 7). If the level is low, add oil as required.

   If the warning light remains on after adding oil or if oil is not available, have the vehicle inspected by a professional workshop as soon as possible. Kia recommends to visit an authorized Kia dealer/service partner.

ON ENG 4.qxp 3/18/2019 2:23 PM Page 104

⚠ CAUTION - Engine Oil Pressure Warning Light

- ***If the engine does not stop immediately after the Engine Oil Pressure Warning Light is illuminated, severe damage could result.***
- ***If the warning light stays on while the engine is running, it indicates that there may be serious engine damage or malfunction. In this case,***
  1. ***Stop the vehicle as soon as it is safe to do so.***
  2. ***Turn off the engine and check the oil level. If the oil level is low, fill the engine oil to the proper level.***
  3. ***Start the engine again. If the warning light stays on after the engine is started, turn the engine off immediately. In this case, have the vehicle inspected by a professional workshop. Kia recommends to visit an authorized Kia dealer/service partner.***

Low Fuel Level Warning Light



This warning light illuminates:

When the fuel tank is nearly empty.

If the fuel tank is nearly empty:

Add fuel as soon as possible.

⚠ CAUTION - Low Fuel Level

Driving with the Low Fuel Level warning light on or with the fuel level below "E" can cause the engine to misfire and damage the catalytic converter (if equipped).

Low Tire Pressure Warning Light (if equipped)



This warning light illuminates:

- Once you set the Engine Start/Stop Button to the ON position.
  - It illuminates for approximately 3 seconds and then goes off.
- When one or more of your tires are significantly underinflated (The location of the underinflated tires are displayed on the LCD display).

❇For more details, refer to "Tire Pressure Monitoring System (TPMS)" in chapter 6.

ON ENG 4.qxp 3/18/2019 2:23 PM Page 105

This warning light remains on after blinking for approximately 60 seconds or repeats blinking and off at the intervals of approximately 3 seconds:

- When there is a malfunction with the TPMS.

  In this case, have the vehicle inspected by a professional workshop as soon as possible. Kia recommends to visit an authorized Kia dealer/service partner.

✻For more details, refer to “Tire Pressure Monitoring System (TPMS)” in chapter 6.

⚠ WARNING - Safe Stopping

- **The TPMS cannot alert you to severe and sudden tire damage caused by external factors.**
- **If you notice any vehicle instability, immediately take your foot off the accelerator pedal, apply the brakes gradually with light force, and slowly move to a safe position off the road.**

Overspeed Warning Light (if equipped)

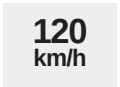

This warning light blinks:

- When you drive the vehicle more than 120 km/h.
  - This is to prevent you from driving your vehicle with overspeed.
  - The overspeed warning chime also sound for approximately 5 seconds.

LED Headlamp Warning Light (if equipped)



This warning light illuminates:

- Once you set the Engine Start/Stop Button to the ON position.
  - It illuminates for approximately 3 seconds and then goes off.
- When there is a malfunction with the LED headlamp.

In this case, have the vehicle inspected by a professional workshop. Kia recommends to visit an authorized Kia dealer/service partner.

This warning light blinks:

- When there is a malfunction with a LED headlamp related part.

In this case, have the vehicle inspected by a professional workshop. Kia recommends to visit an authorized Kia dealer/service partner.

ON ENG 4.qxp 3/18/2019 2:23 PM Page 106

⚠ CAUTION - LED Headlamp Warning Light

Continuous driving with the LED Headlamp Warning Light on or blinking can reduce LED headlamp (low beam) life.

Forward Collision-avoidance Assist Warning light (FCA, if equipped)



This indicator light illuminates:

- When there is a malfunction with the FCA.

In this case, have the vehicle inspected by a professional workshop. Kia recommends to visit an authorized Kia dealer/service partner.

All Wheel Drive (AWD) Warning Light (if equipped)



This indicator light illuminates:

- When there is a malfunction with the AWD system.

In this case, have the vehicle inspected by a professional work shop. Kia recommends to visit an authorized Kia dealer/service partner.

ON ENG 4.qxp 3/18/2019 2:23 PM Page 107

Master Warning Light



This indicator light illuminates:

- LED head lamp malfunction (if equipped)
- Lamp malfunction
- High Beam Assist malfunction (if equipped)

The Master Warning Light illumi nates when more than one of the above warning situations occur.

If the warning situation is solved, the master warning light will be turned off.

Electronic Parking Brake (EPB) Warning Light (if equipped)



This warning light illuminates:

- Once you set the Engine Start/Stop Button to the ON position.
  - It illuminates for approximately 3 seconds and then goes off.
- When there is a malfunction with the EPB.

  In this case, have the vehicle inspected by a professional workshop. Kia recommends to visit an authorized Kia dealer/service partner.

✻ NOTICE - Electronic Parking Brake (EPB) Warning Light

The Electronic Parking Brake (EPB) Warning Light may illuminates when the Electronic Stability control (ESC) Indicator Light comes on to indicates that the ESC is not working properly (This does not indicate malfunction of the EPB).

Indicator Lights

Electronic Stability Control (ESC) Indicator Light (if equipped)



This indicator light illuminates:

- Once you set the Engine Start/Stop Button to the ON position.
  - It illuminates for approximately 3 seconds and then goes off.
- When there is a malfunction with the ESC system.

  In this case, have the vehicle inspected by a professional workshop. Kia recommends to visit an authorized Kia dealer/service partner.

This indicator light blinks:

While the ESC is operating.

✻For more details, refer to “Electronic Stability Control (ESC)” in chapter 5.

ON ENG 4.qxp 3/18/2019 2:23 PM Page 108

Electronic Stability Control (ESC) OFF Indicator Light (if equipped)



This indicator light illuminates:

- Once you set the Engine Start/Stop Button to the ON position.
  - It illuminates for approximately 3 seconds and then goes off.
- When you deactivate the ESC system by pressing the ESC OFF button.

✻For more details, refer to “Electronic Stability Control (ESC)” in chapter 5.

Immobilizer Indicator Light



This indicator light illuminates for up to 30 seconds:

- When the vehicle detects the smart key in the vehicle properly while the Engine Start/Stop Button is ACC or ON.
  - At this time, you can start the engine.
  - The indicator light goes off after starting the engine.

This indicator light blinks for a few seconds:

- When the smart key is not in the vehicle.
  - At this time, you can not start the engine.

This indicator light illuminates for 2 seconds and goes off:

- When the vehicle can not detect the smart key which is in the vehicle while the Engine Start/Stop Button is ON.

  In this case, have the vehicle inspected by a professional workshop. Kia recommends to visit an authorized Kia dealer/service partner.

This indicator light blinks:

- When the battery of the smart key is weak.
  - At this time, you can not start the engine. However, you can start the engine if you press the Engine Start/Stop Button with the smart key. (For more details, refer to “Starting the Engine” in chapter 5).
- When there is a malfunction with the immobilizer system.

  In this case, have the vehicle inspected by a professional workshop. Kia recommends to visit an authorized Kia dealer/service partner.

ON ENG 4.qxp 3/18/2019 2:23 PM Page 109

Turn Signal Indicator Light



This indicator light blinks:

- When you switch on the turn signal light on.

If any of the following occurs, there may a malfunction with the turn signal system. In this case, have the vehicle inspected by a professional workshop. Kia recommends to visit an authorized Kia dealer/service partner.

- The indicator light does not blink but illuminates.
- The indicator light blinks more rapidly.
- The indicator light does not illuminate at all.

Low Beam Indicator Light



This indicator light illuminates:

- When the headlights are on.

High Beam Indicator Light



This indicator light illuminates:

- When the headlights are on and in the high beam position
- When the turn signal lever is pulled into the Flash-to-Pass position.

Light ON Indicator Light



This indicator light illuminates:

- When the tail lights or headlights are on.

Rear Fog Indicator Light (if equipped)



This indicator light illuminates:

- When the rear fog lights are on.

Front Fog Indicator Light



This indicator light illuminates:

- When the front fog lights are on.

ON ENG 4.qxp 3/18/2019 2:23 PM Page 110

High beam assist indicator (if equipped)



This warning light illuminates :

- When the high-Beam is on with the light switch in the AUTO light position.
- If your vehicle detects oncoming or preceding vehicles, the high beam assist system will switch the high beam to low beam automatically.

❈For more details, refer to “High beam assist” in chapter 4.

AUTO HOLD Indicator Light (if equipped)

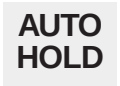

This indicator light illuminates:

- [White] When you activate the auto hold system by pressing the AUTO HOLD button.
- [Green] When you stop the vehicle completely by depressing the brake pedal with the auto hold system activated.
- [Yellow] When there is a malfunction with the auto hold system.

  In this case, have the vehicle inspected by a professional workshop. Kia recommends to visit an authorized Kia dealer/service partner.

❈For more details, refer to “Auto Hold” in chapter 5.

LKA (Lane Keeping Assist) indicator (if equipped)



The LKA indicator will illuminate when you turn the lane keeping assist system on by pressing the LKA button.

If there is a problem with the system, the yellow LKA indicator will illuminate.

❈For more details, refer to “Lane Keeping Assist (LKA) system” in chapter 5.

ON ENG 4.qxp 3/18/2019 2:23 PM Page 111

ECO Mode Indicator Light (if equipped)



This indicator light illuminates:

- When you select “ECO” mode as drive mode.

❈For more details, refer to “Drive Mode Integrated Control System” in chapter 5.

SPORT Mode Indicator Light (if equipped)



This indicator light illuminates:

- When you select “SPORT” mode as drive mode.

❈For more details, refer to “Drive Mode Integrated Control System” in chapter 5.

SMART Mode Indicator (if equipped)



This indicator light illuminates:

- When you select “SMART” mode as drive mode.

❈For more details, refer to “Drive Mode Integrated Control System” in chapter 5.

ON ENG 4.qxp 3/18/2019 2:23 PM Page 112

All Wheel Drive (AWD) LOCK Indicator Light (if equipped)



This indicator light illuminates:

- Once you set the Engine Start/Stop Button to the ON position.
  - It illuminates for approximately 3 seconds and then goes off.
- When you select AWD Lock mode by pressing the AWD LOCK button.
  - The AWD LOCK mode is to increase the drive power when driving on wet pavement, snow covered roads and/or off-road.

⚠ CAUTION - AWD Lock Mode

Do not use AWD LOCK mode on dry paved roads or highway, it can cause noise, vibration or damage of AWD related parts.

ON ENG 4.qxp 3/18/2019 2:23 PM Page 113

HEAD UP DISPLAY (HUD) (IF EQUIPPED)

Description

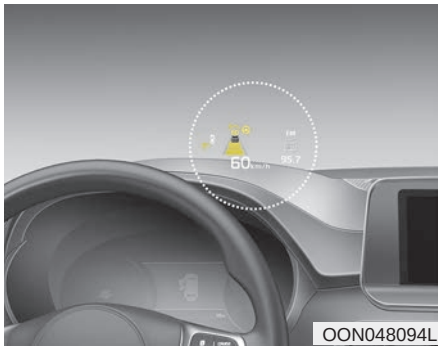

The head up display is a transparent display which projects a shadow of some information of the instrument cluster and navigation on the windshield glass.

- The head up display image on the windshield glass may be invisible when:
  - Sitting posture is bad.
  - Wearing a polarized sunglasses.
  - There is an object on the cover of the head up display.
  - Driving on a wet road.
  - An inadequate lighting is turned on inside the vehicle.
  - Any light comes from the outside.
  - Wearing an inadequate glasses to your eyesight.
- If the head up display image is not shown well, adjust the height, rotation or illumination of the head up display in the LCD Display.

❊ For more details, refer to “LCD Display” in this chapter.

- When the head up display needs inspection or repair, Kia recommends to visit an authorized Kia dealer/service partner

⚠ WARNING - Head Up Display

- **Do not make the front windshield glass have window tint or other types of metallic coating. Otherwise, the head up display image may be invisible.**
- **Do not place any accessories on the crash pad or attach any objects on the windshield glass.**
- **As the Blind-spot Collision Warning (BCW) system is a supplemental device for your safe driving, it may be dangerous to rely on only the BCW information of the head up display image when changing the lane. Always pay attention to drive safely.**

ON ENG 4.qxp 3/18/2019 2:23 PM Page 114

⚠ CAUTION

When replacing the front windshield glass of the vehicles equipped with the head up display, replace it with a windshield glass designed for the head up display operation. Otherwise, duplicated images may be displayed on the windshield glass.

Head Up Display ON/OFF



OON048124L

The HUD display will be activated or deactivated in user setting mode while engine is ON.

Head Up Display Information

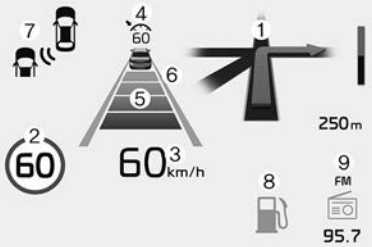

OON048095L

1. Turn By Turn navigation information (if equipped)
2. Road signs (if equipped)
3. Speedometer
4. Cruise setting speed (if equipped)
5. Smart Cruise Control (SCC) information (if equipped)
6. Lane Keeping Assist(LKA) system information (if equipped)
7. Blind-spot Collision Warning (BCW) system information (if equipped)
8. Warning lights (Low fuel)
9. Audio/Video information

ON ENG 4.qxp 3/18/2019 2:23 PM Page 115

Head Up Display Setting

On the LCD display, you can change the head up display settings as follows.

1. Display height
2. Rotation
3. Brightness
4. Content select
5. Speedometer size
6. Speedometer color

✻ For more details, refer to “LCD Display” in this chapter.

ON ENG 4.qxp 3/18/2019 2:23 PM Page 116

PARKING DISTANCE WARNING-REVERSE (IF EQUIPPED)

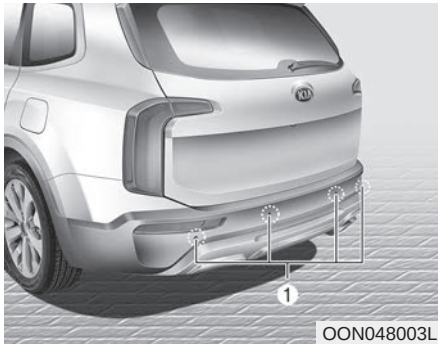

OON048003L

The parking distance warning-reverse assists the driver during backward movement of the vehicle by chiming if any object is sensed within a distance of 120 cm (47 in.) behind the vehicle.

This system is a supplemental system and it is not intended to nor does it replace the need for extreme care and attention of the driver. The sensing range and objects detectable by the back sensors (1) are limited. Whenever backing-up, pay as much attention to what is behind you as you would in a vehicle without a parking distance warning-reverse.

⚠ WARNING

The parking distance warning-reverse is a supplementary function only. The operation of the parking distance warning-reverse can be affected by several factors (including environmental conditions). It is the responsibility of the driver to always check the area behind the vehicle before and while backing up.

Operation of the parking distance warning-reverse

Operating condition

- This system will activate when the indicator on the rear parking assist OFF button is not illuminated. If you desire to deactivate the parking distance warning-reverse, press the rear parking assist OFF button again. (The indicator on the button will illuminate.) To turn the system on, press the button again. (The indicator on the button will go off.)
- This system will activate when backing up with the Engine Start/Stop button ON.

  If the vehicle is moving at a speed over 5 km/h (3 mph), the system may not be activated correctly.
- The sensing distance while the parking distance warning-reverse is in operation is approximately 120 cm (47 in.).
- When more than two objects are sensed at the same time, the closest one will be recognized first.

ON ENG 4.qxp 3/18/2019 2:23 PM Page 117

Types of warning sound	Indicator*
When an object is 120 cm to 61 cm (47 in. to 24 in.) from the rear bumper: Buzzer beeps intermittently.	
When an object is 60 cm to 31 cm (23 in. to 12 in.) from the rear bumper: Buzzer beeps more frequently.	
When an object is within 30 cm (11 in.) of the rear bumper: Buzzer sounds continuously.	

* if equipped

✻ NOTICE

The indicator may differ from the illustration as objects or sensors status.

If the indicator blinks, have the system checked by a professional workshop. Kia recommends to visit an authorized Kia dealer/service partner.

Non-operational conditions of parking distance warning-reverse

The parking distance warning-reverse may not operate properly when:

1. Moisture is frozen to the sensor. (It will operate normally when the moisture has been cleared.)
2. The sensor is covered with foreign matter, such as snow or water, or the sensor cover is blocked. (It will operate normally when the material is removed or the sensor is no longer blocked.)
3. Driving on uneven road surfaces (unpaved roads, gravel, bumps, gradient).
4. Objects generating excessive noise (vehicle horns, loud motorcycle engines, or truck air brakes) are within range of the sensor.
5. Heavy rain or water spray exists.
6. Wireless transmitters or cellular phones are within range of the sensor.
7. The sensor is covered with snow.
8. Trailer towing

The detecting range may decrease when:

1. The sensor is stained with foreign matter such as snow or water. (The sensing range will return to normal when removed.)
2. Outside air temperature is extremely hot or cold.

The following objects may not be recognized by the sensor:

1. Sharp or slim objects such as ropes, chains or small poles.
2. Objects which tend to absorb the sensor frequency such as clothes, spongy material or snow.
3. Undetectable objects smaller than 1 m (40 in.) in height and narrower than 14 cm (6 in.) in diameter.

ON ENG 4.qxp 3/18/2019 2:23 PM Page 118

Parking distance warning-reverse precautions

- The parking distance warning-reverse may not sound consistently depending on the speed and shapes of the objects detected.
- The parking distance warning-reverse may malfunction if the vehicle bumper height or sensor installation has been modified or damaged. Any non-factory installed equipment or accessories may also interfere with the sensor performance.
- The sensor may not recognize objects less than 30 cm (11 in.) from the sensor, or it may sense an incorrect distance. Use caution.
- When the sensor is frozen or stained with snow, dirt, or water, the sensor may be inoperative until the stains are removed using a soft cloth.
- Do not push, scratch or strike the sensor. Sensor damage could occur.

✻ NOTICE

This system can only sense objects within the range and location of the sensors; It can not detect objects in other areas where sensors are not installed. Also, small or slim objects, such as poles or objects located between sensors may not be detected by the sensors.
Always visually check behind the vehicle when backing up.
Be sure to inform any drivers of the vehicle that may be unfamiliar with the system regarding the systems capabilities and limitations.

⚠ WARNING

Pay close attention when the vehicle is driven close to objects on the road, particularly pedestrians, and especially children. Be aware that some objects may not be detected by the sensors, due to the object's distance, size or material, all of which can limit the effectiveness of the sensor. Always perform a visual inspection to make sure the vehicle is clear of all obstructions before moving the vehicle in any direction.

ON ENG 4.qxp 3/18/2019 2:23 PM Page 119

Self-diagnosis

If you don't hear an audible warning sound or if the buzzer sounds intermittently when shifting the gear to the R (Reverse) position, this may indicate a malfunction in the parking distance warning-reverse. If this occurs, have the system checked by a professional workshop. Kia recommends to visit an authorized Kia dealer/service partner.

⚠ WARNING

Your new vehicle warranty does not cover any accidents or damage to the vehicle or injuries to its occupants due to a parking distance warning-reverse malfunction. Always drive safely and cautiously.

ON ENG 4.qxp 3/18/2019 2:23 PM Page 120

PARKING DISTANCE WARNING (IF EQUIPPED)

■ Rear

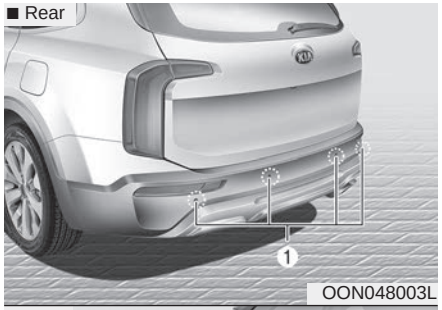

OON048003L

■ Front

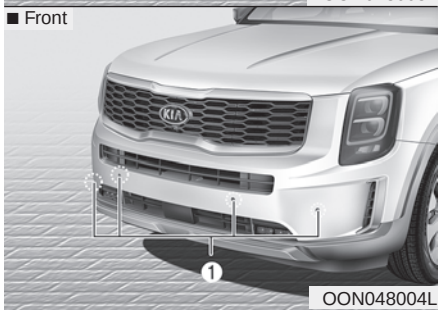

OON048004L

The parking distance warning assists the driver during movement of the vehicle by chiming if any object is sensed within the distance of 100 cm (39 in.) in front and 120 cm (47 in.) behind the vehicle.

This system is a supplemental system and it is not intended to nor does it replace the need for extreme care and attention of the driver.

The sensing range and objects detectable by the sensors (1) are limited. Whenever moving pay as much attention to what is in front and behind of you as you would in a vehicle without a parking distance warning.

⚠ WARNING

The parking distance warning should only be considered as a supplementary function. The driver must check the front and rear view. The operational function of the parking distance warning can be affected by many factors and conditions of the surroundings, so the responsibility rests always with the driver.

Operation of the parking distance warning

Operating condition

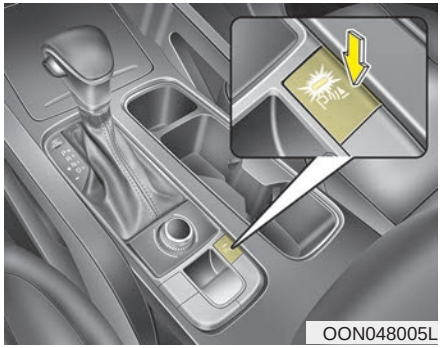

OON048005L

- This system activates when the parking distance warning button is pressed with the Engine Start/Stop button ON.
- The indicator of the parking distance warning button turns on automatically and activates the parking distance warning when you shift the gear to the R (Reverse) position.

ON ENG 4.qxp 3/18/2019 2:23 PM Page 121

- The sensing distance while backing up is approximately 120 cm (47 in.) when you are driving less than 10 km/h (6.2 mph).
- The sensing distance while moving forward is approximately 100 cm (39 in.) when you are driving less than 10 km/h (6.2 mph).
- When more than two objects are sensed at the same time, the closest one will be recognized first.
- The side sensors are activated when you shift the gear to the R (Reverse) position.
- If the vehicle speed is above 20km/h, the system automatically turns off. To activate again, push the button.

✻ NOTICE

It may not operate if it's distance from the object is already less than approximately 25 cm when the system is ON.

Type of warning indicator and sound

Distance from object		Warning indicator		Warning sound
		When driving forward	When driving rearward	
100cm~61cm	Front		-	Buzzer beeps intermittently
120cm~61cm	Rear	-		Buzzer beeps intermittently
60cm~31cm	Front			Buzzer beeps frequently
	Rear	-		Buzzer beeps frequently
30cm	Front			Buzzer sounds continuously
	Rear	-		Buzzer sounds continuously

✻ NOTICE

- **The actual warning sound and indicator may differ from the illustration according to objects or sensor status.**
- **Do not wash the vehicle's sensor with high pressure water.**

ON ENG 4.qxp 3/18/2019 2:23 PM Page 122

⚠ CAUTION

- ***This system can only sense objects within the range and location of the sensors;***

  It can not detect objects in other areas where sensors are not installed. Also, small or slim objects, such as poles or objects located between sensors may not be detected by the sensors.

  Always visually check behind the vehicle when backing up.
- ***Be sure to inform any drivers of the vehicle that may be unfamiliar with the system regarding the systems capabilities and limitations.***

Non-operational conditions of parking distance warning

Parking distance warning may not operate normally when:

1. Moisture is frozen to the sensor. (It will operate normally when moisture melts.)
2. Sensor is covered with foreign matter, such as snow or water, or the sensor cover is blocked. (It will operate normally when the material is removed or the sensor is no longer blocked.)
3. The parking distance warning button is off.

There is a possibility of parking distance warning malfunction when:

1. Driving on uneven road surfaces such as unpaved roads, gravel, bumps, or gradient.
2. Objects generating excessive noise such as vehicle horns, loud motorcycle engines, or truck air brakes can interfere with the sensor.
3. Heavy rain or water spray.
4. Wireless transmitters or mobile phones present near the sensor.
5. Sensor is covered with snow.

ON ENG 4.qxp 3/18/2019 2:23 PM Page 123

Detecting range may decrease when:

1. Outside air temperature is extremely hot or cold.
2. Undetectable objects smaller than 1 m and narrower than 14 cm in diameter.

The following objects may not be recognized by the sensor:

1. Sharp or slim objects such as ropes, chains or small poles.
2. Objects, which tend to absorb sensor frequency such as clothes, spongy material or snow.

✻ NOTICE

1. The warning may not sound sequentially depending on the speed and shapes of the objects detected.
2. The parking distance warning may malfunction if the vehicle bumper height or sensor installation has been modified. Any non-factory installed equipment or accessories may also interfere with the sensor performance.
3. Sensor may not recognize objects less than 30 cm from the sensor, or it may sense an incorrect distance. Use with caution.
4. When the sensor is frozen or stained with snow or water, the sensor may be inoperative until the stains are removed using a soft cloth.
5. Do not push, scratch or strike the sensor with any hard objects that could damage the surface of the sensor. Sensor damage could occur.

✻ NOTICE

This system can only sense objects within the range and location of the sensors, it can not detect objects in other areas where sensors are not installed. Also, small or slim objects, or objects located between sensors may not be detected.
Always visually check in front and behind the vehicle when driving.
Be sure to inform any drivers in the vehicle that may be unfamiliar with the system regarding the systems capabilities and limitations.

ON ENG 4.qxp 3/18/2019 2:23 PM Page 124

⚠ WARNING

Pay close attention when the vehicle is driven close to objects on the road, particularly pedestrians, and especially children. Be aware that some objects may not be detected by the sensors, due to the objects distance, size or material, all of which can limit the effectiveness of the sensor. Always perform a visual inspection to make sure the vehicle is clear of all obstructions before moving the vehicle in any direction.

Self-diagnosis

When you shift the gear to the R (Reverse) position and if one or more of the below occurs you may have a malfunction in the parking distance warning-reverse.

- You don't hear an audible warning sound or if the buzzer sounds intermittently.
-  (blinks) is displayed.

If this occurs, have the system checked by a professional workshop. Kia recommends to visit an authorized Kia dealer/service partner.

⚠ WARNING

Your new vehicle warranty does not cover any accidents or damage to the vehicle or injuries to its occupants related to a parking distance warning. Always drive safely and cautiously.

ON ENG 4.qxp 3/18/2019 2:23 PM Page 125

REAR VIEW MONITOR (IF EQUIPPED)

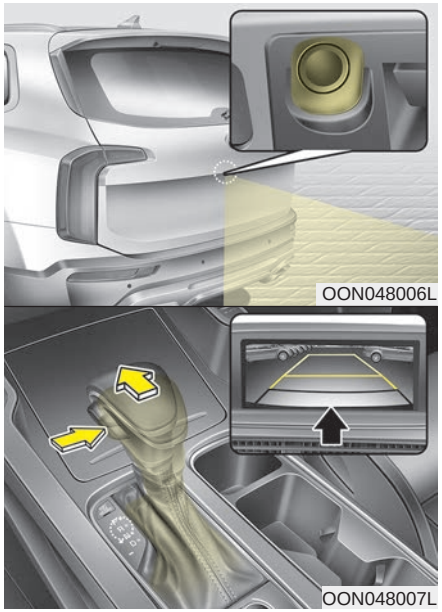

The rear view monitor will activate when the back-up light is ON with the engine is ON and the shift lever in the R (Reverse) position.

This system is a supplemental system that shows behind the vehicle through the multimedia screen while backing-up. Refer to a separately supplied manual for detailed information.

⚠ WARNING

- **This system is a supplementary function only. It is the responsibility of the driver to always check the inside/outside rearview mirror and the area behind the vehicle before and while backing up because there is a dead zone that can't be seen by the camera.**
- **Always keep the camera lens clean. If lens is covered with foreign matter, the camera may not operate normally.**

Rear View Monitor - Top view

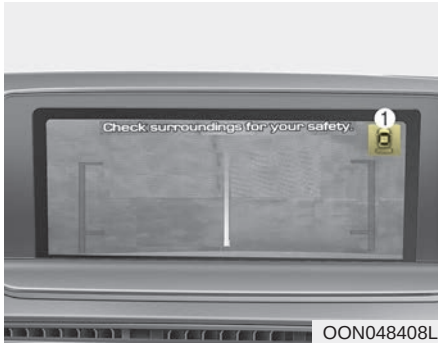

When you touch the icon (1), the top view is displayed on the screen and shows the distance from the vehicle in the back of your vehicle. Touch the icon (1) again, to switch back to the previous screen.

ON ENG 4.qxp 3/18/2019 2:23 PM Page 126

SURROUND VIEW MONITORING SYSTEM (IF EQUIPPED)

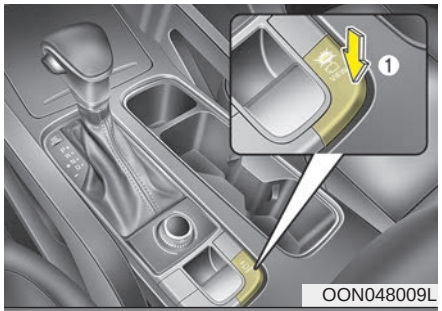

OON048009L



OON048010L

This is the parking support system to show around circumstance when you park the vehicle in monitor. When you push the button in [ON] position, it is operated. To cancel the system, push again.

Operating conditions

- When the engine is ON.
- When the shift lever is in D (Drive),N (Neutral) or R (Reverse).

- When the vehicle moves backwards, regardless of On/Off of button and vehicle speed, the SVM is operated.
- When the tailgate and driver/passenger door are opened and the outside mirror is folded, the warning is illuminated in SVM system.
- If the SVM system does not operate normally, contact a professional workshop. Kia recommends to visit an authorized Kia dealer/service partner.

* SVM : Surround View Monitoring

Rear view monitor (if equipped)

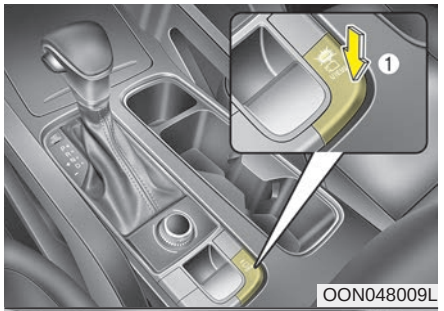

OON048009L



OON048412L

You may check the rear view through the screen while driving.

ON ENG 4.qxp 3/18/2019 2:23 PM Page 127

The system is activated when:

- The engine is ON
- The vehicle's speed is over 15 km/h and you press the SVM button (1, indicator ON)
- The vehicle's speed is under 15 km/h and you press the  (2) on the screen

The system is deactivated when:

- You press the SVM button (1, indicator OFF) again
- You press the  (2) on the screen again
- You press the audio or multimedia screen system button (3)

✻ NOTICE

- **If vehicle speed is over 15 km/h (9 mph)**
  - **the rear image stays ON when the rear view was on the screen**
  - **if other modes (top, front wide, front right and front left) of SVM system was on the screen, the screen changes to the screen of rear view.**
- **If the SVM system is ON and the vehicle speed is under 15 km/h (9 mph)**
  - **the rear image stays ON when the rear view was on the screen**
  - **a pop-up for selecting the SVM mode (top, front wide, front right and front left) appears when pressing (2) on the screen**

(Continued)

(Continued)

- **When the vehicle is backing up, the rear image will appear on the screen automatically regardless of the vehicle speed or SVM button (1) status.**
  - **If the rear image was ON, the screen switches to the parking assist screen.**
  - **If the screen (top, front wide, front right and front left) of other modes of SVM system was ON, the screen for setting the initial rear view mode appears.**
  - **When the shift lever is moved from R (Reverse) to D (Drive), the screen of the previous mode is displayed.**
- **A warning appears on the SVM system when**
  - **the tailgate is opened**
  - **the driver/passenger's door is opened**
  - **the outside rearview mirror is folded**

ON ENG 4.qxp 3/18/2019 2:23 PM Page 128

⚠ WARNING

- **The Rear View Monitor system is a supplementary driving assist system. Make sure to check the rear view directly for safety. What you see on the screen may differ from the actual vehicle's location.**
- **The camera may not operate properly if any foreign substance is on the rear camera lens. Always keep the lens clean.**
- **When the rear view is displayed while driving, an icon () is indicated on the upper right side of the screen.**

ON ENG 4.qxp 3/18/2019 2:23 PM Page 129

BLIND SPOT VIEW MONITOR SYSTEM (IF EQUIPPED)



OON048102L

BVM (Blind-spot view monitor) system displays the passenger-side rear areas in the cluster when the system is activated.

To turn on BVM system

Under condition BVM system is enabled in the settings

(1) Engine Start/Stop Button is in the ON position.

(2) The turn signal is activated.

To turn off BVM system

(1) Engine Start/Stop Button is in the OFF position.

(2) The turn signal is deactivated.

(3) Other warning screen pops up and takes priority over the BVM system.

✻ NOTICE

Like all assistance systems, BVM system has limitations. Over-reliance on the system may result in a collision.

⚠ WARNING

- **ALWAYS look around your vehicle to make sure there are no objects or obstacles before moving the vehicle in any direction to prevent a collision.**
- **Objects are closer than they appear. Failure to visually confirm that is safe to change the lane before doing so may result in crash and serious injury or death.**
- **Always keep the camera lens clean. The camera may not work normally if the lens is covered with foreign material.**

ON ENG 4.qxp 3/18/2019 2:23 PM Page 130

LIGHTING

Battery saver function

- The purpose of this feature is to prevent the battery from being discharged. The system automatically turns off the position lights when the driver turns the engine off and opens the driver-side door.
- With this feature, the position lights will turn off automatically if the driver parks on the side of the road at night.

  If necessary, to keep the lights on when the engine is turned off, perform the following:

  1) Open the driver-side door.
  2) Turn the position lights OFF and ON again using the light switch on the steering column.

⚠ CAUTION

If the driver gets out of the vehicle through other doors (except driver's door), the battery saver function does not operate. Therefore, It causes the battery to be discharged. In this case, make sure to turn off the lamp before getting out of the vehicle.

Headlight escort function

If you turn the Engine Start/Stop button to the ACC or OFF position with the headlights ON, the headlights remain on for about 5 minutes. However, if the driver's door is opened and closed, the headlights are turned off after 15 seconds.

The headlights can be turned off by pressing the lock button on the smart key twice or turning the light switch to the OFF position.

ON ENG 4.qxp 3/18/2019 2:23 PM Page 131

Daytime running light

The Daytime Running Lights (DRL) can make it easier for others to see the front of your vehicle during the day. DRL can be helpful in many different driving conditions, and it is especially helpful after dawn and before sunset. The DRL system turns OFF when:

1. The headlight switch is ON.
2. The engine is OFF.
3. The front fog light is ON.
4. Engaging the parking brake.

Lighting control



OJF048560L

The light switch has a Headlight and a Position light position.

To operate the lights, turn the knob at the end of the control lever to one of the following positions:

(1) OFF position

(2) Auto light position

(3) Position light position

(4) Headlight position

Position light position ( )

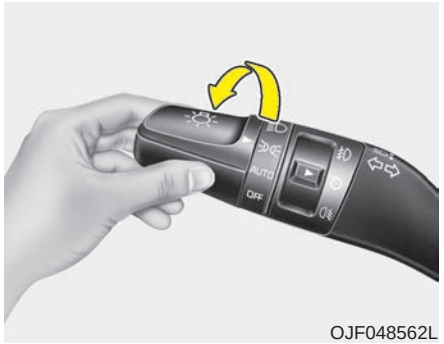

OJF048562L

When the light switch is in the position light position (3rd position), the tail, license and instrument panel lights will turn ON.

ON ENG 4.qxp 3/18/2019 2:23 PM Page 132

Headlight position ( )



OJF048564L

When the light switch is in the headlight position (4th position), the head, tail, license and instrument panel lights will turn ON.

✻ NOTICE

The Engine Start/Stop button must be in the ON position to turn on the headlights.

Auto light position

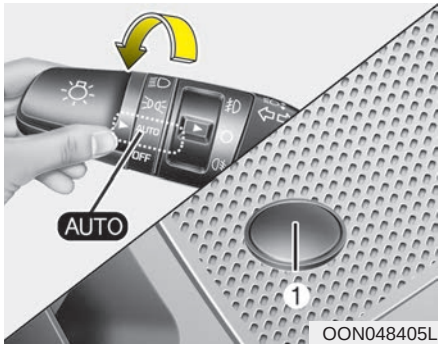

OON048405L

When the light switch is in the AUTO light position, the taillights and headlights will be turned ON or OFF automatically depending on the amount of light outside the vehicle.

⚠ CAUTION

- ***Never place anything over the sensor (1) located on the instrument panel. This will ensure better auto-light system control.***
- ***Don't clean the sensor using a window cleaner. The cleaner may leave a light film which could interfere with sensor operation.***
- ***If your vehicle has window tint or other types of metallic coating on the front windshield, the Auto light system may not work properly.***

ON ENG 4.qxp 3/18/2019 2:23 PM Page 133

High beam operation

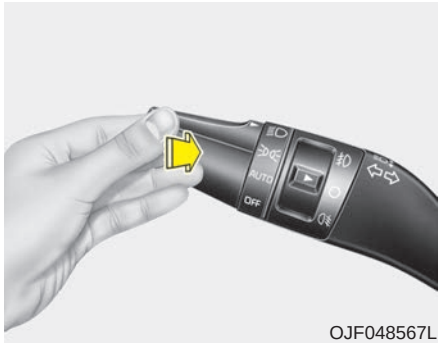

OJF048567L

To turn on the high beam headlamp, push the lever away from you. The lever will return to its original position.

The high beam indicator will light when the headlight high beams are switched on.

To prevent the battery from being discharged, do not leave the lights on for a prolonged time while the engine is not running.

⚠ WARNING

Do not use high beam when there are other vehicles. Using high beam could obstruct the other driver's vision.



OJF048569L

To flash the headlights, pull the lever towards you. It will return to the normal (low beam) position when released. The headlight switch does not need to be on to use this flashing feature.

ON ENG 4.qxp 3/18/2019 2:24 PM Page 134

Turn signals and lane change signals

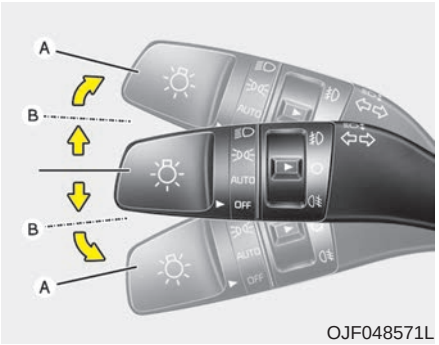

OJF048571L

The Engine Start/Stop button must be on for the turn signals to function. To turn on the turn signals, move the lever up or down (A). The green arrow indicators on the instrument panel indicate which turn signal is operating. They will self-cancel after a turn is completed. If the indicator continues to flash after a turn, manually return the lever to the OFF position.

To signal a lane change, move the turn signal lever slightly and hold it in position (B). The lever will return to the OFF position when released.

If an indicator stays on and does not flash or if it flashes abnormally, one of the turn signal bulbs may be burned out and will require replacement.

One-touch lane change function (if equipped)

To activate an one-touch lane change function, move the turn signal lever slightly for less than 0.7 second and then release it. The lane change signals will blink 3, 5 or 7 times.

You can activate or deactivate the One Touch Turn Signal function or choose the number of blinking (3, 5, or 7) by selecting “User Settings → Lights → One Touch Turn Signal”.

For mode information, refer to "user settings" in this chapter.

✻ NOTICE

If an indicator flash is abnormally quick or slow, a bulb may be burned out or have a poor electrical connection in the circuit.

ON ENG 4.qxp 3/18/2019 2:24 PM Page 135

Front fog light (if equipped)



OJF048572L

Fog lights are used to provide improved visibility when visibility is poor due to fog, rain or snow, etc. The fog lights will turn on when the fog light switch (1) is turned on after the parklight is turned on.

To turn off the fog lights, turn the fog light switch (1) to the ON position.

⚠ CAUTION

When in operation, the fog lights consume large amounts of vehicle electrical power. Only use the fog lights when visibility is poor.

Rear fog light (if equipped)



OJF048573L

To turn the rear fog lights on, turn the headlight switch to the headlight on position and turn the rear fog light switch (1) to the on position.

ON ENG 4.qxp 3/18/2019 2:24 PM Page 136

The rear fog lights turn on when the rear fog light switch is turned on after the front fog light switch is turned on and the headlight switch is in the parklight position.

To turn the rear fog lights off, turn the rear fog light switch to the on position again or turn the headlight switch off.

✻ NOTICE

To turn on the rear fog light switch, the Engine Start/Stop button must be in the ON position.

High Beam Assist (if equipped)

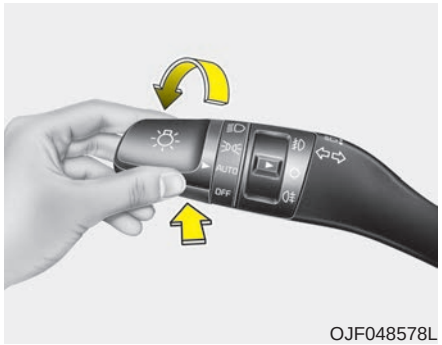

OJF048578L

The High Beam Assist is a system that automatically adjusts the headlamp range (switches between high beam and low beam) according to the brightness of other vehicles and road conditions.

ON ENG 4.qxp 3/18/2019 2:24 PM Page 137

Operating condition

1. Place the light switch in the AUTO position.
2. Turn on the high beam by pushing the lever away from you.
3. The High Beam Assist ( ) indicator will illuminate.
4. The High Beam Assist will turn on when vehicle speed is above 40 km/h (25 mph).
5. The details of operation with the light switch while the High Beam Assist is on are below.
   (1) If the light switch is pushed away, the High Beam Assist will turn off and the high beam will be on continuously.
   (2) If the light switch is pulled towards you when the high beam is off, the high beam will be on without cancellation of the High Beam Assist. (When you hands off, the lever will move to the middle and the high beam will turn off.)
   (3) If the light switch is pulled towards you when the high beam is on by the High Beam Assist, the low beam will be on and the High Beam Assist will turn off.
   (4) If the light switch is turned to the headlamp position ( ) from AUTO position, the High Beam Assist will turn off and the low beam will be on continuously.

When the High Beam Assist is operating, the high beam switches to low beam in the below conditions.

- When the headlamp is detected from the on-coming vehicle.
- When the tail lamp is detected from the front vehicle.
- When headlamp/tail lamp of bicycle/motorcycle is detected.
- When the surrounding is so bright that high beams are not needed.
- When streetlights or other lights are detected.
- When the light switch is not in the AUTO position.
- When the High Beam Assist is off.
- When vehicle speed is below 30 km/h (19 mph).

ON ENG 4.qxp 3/18/2019 2:24 PM Page 138

⚠ CAUTION

The driver must be cautious in the below situations may not work properly when recognition of light from on-coming or front vehicle is poor or limited:

- ***When the light from on-coming or front vehicle is poor***
- ***When the light from the on-coming or front vehicle is not detected because of lamp damage, hidden from sight, etc.***
- ***When the lamp of the on-coming or front vehicle is covered with dust, snow or water.***
- ***When the front vehicle's headlamps are off but the fog lamps on and etc.***

(Continued)

(Continued)

- ***When external condition is intervened***
- ***When there is a similar shape lamp with the front vehicle's lamps.***
- ***When the headlamp is not repaired or replaced at an authorized dealer.***
- ***When headlamp aiming is not properly adjusted.***
- ***When driving on a narrow curved road, rough road, downhill or uphill.***
- ***When only part of the vehicle in front is visible on a cross-road or curved road.***
- ***When there is a traffic light, reflecting sign, flashing sign or mirror ahead.***
- ***When there is a temporary reflector or flash ahead (construction area).***
- ***When the road conditions are bad such as being wet, iced or covered with snow.***

(Continued)

(Continued)

- ***When a vehicle suddenly appears from a curve.***
- ***When the vehicle is tilted from a flat tire or being towed.***
- ***When the LKA (Lane Keeping Assist) system failure indicator (yellow) illuminates (if equipped) and etc.***
- ***When front visibility is poor***
- ***When the lamp of the on-coming or front vehicle is covered with dust, snow or water.***
- ***When the light from the on-coming or front vehicle is not detected because of exhaust fume, smoke, fog, snow, etc.***
- ***When the front window is covered with foreign matters.***
- ***When it is hard to see because of fog, heavy rain or snow and etc.***

ON ENG 4.qxp 3/18/2019 2:24 PM Page 139

⚠ WARNING

- **Do not disassemble a front view camera temporarily for tinted window or attaching any types of coatings and accessories. If you disassemble the camera and assemble it again, have the system checked by a professional workshop. Kia recommends to visit an authorized Kia dealer/service partner and have the system checked to need a calibration.**
- **When you replace or reinstall the windshield glass, front view camera, have the system checked by a professional workshop. Kia recommends to visit an authorized Kia dealer/service partner.**
- **Be careful that water doesn't get into the High Beam Assist unit and do not remove or damage related parts of the High Beam Assist system.**

(Continued)

(Continued)

- **Do not place objects on the crash pad that reflect light such as mirrors, white paper, etc. The system may malfunction if sunlight is reflected.**
- **At times, the High Beam Assist may not work properly. The system is for your convenience only. It is the responsibility of the driver for safe driving practices and always check the road conditions for your safety.**
- **When the system does not operate normally, change the lamp position manually between the high beam and low beam.**

ON ENG 4.qxp 3/18/2019 2:24 PM Page 140

WIPERS AND WASHERS

Windshield wiper/washer

■ Type A

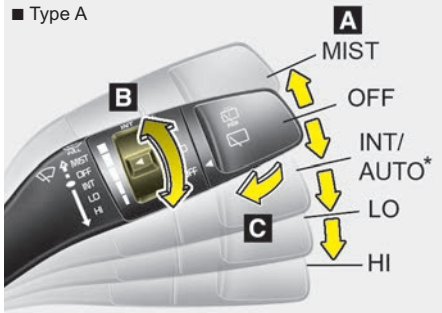

■ Type B

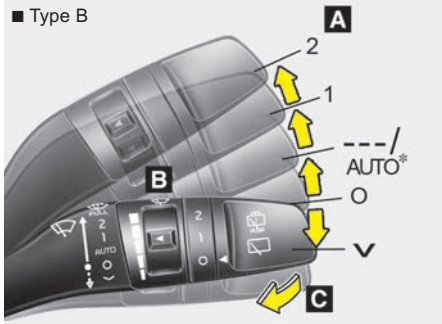

Rear window wiper/washer

■ Type A'

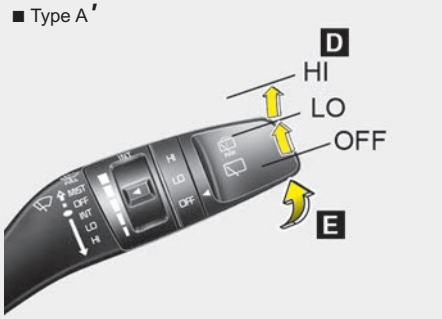

■ Type B'

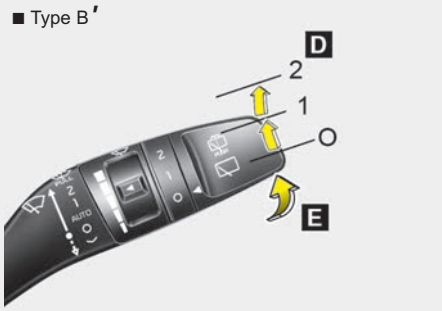

OQL048407L/OUM048222L/OYP048182N/OUM048223L

A : Wiper speed control (front)

- MIST/ ⌵ – Single wipe
- OFF / O – Off
- INT / --- – Intermittent wipe
  AUTO* – Auto control wipe
- LO / 1 – Low wiper speed
- HI / 2 – High wiper speed

B : Intermittent control wipe time adjustment

C : Wash with brief wipes (front)*

D : Rear wiper/washer control

- HI / 2 – Continuous wipe
- LO / 1 – Intermittent wipe*
- OFF / O – Off

E : Wash with brief wipes (rear)*

* if equipped

ON ENG 4.qxp 3/18/2019 2:24 PM Page 141

Windshield wipers

Operates as follows when the Engine Start/Stop button is turned ON.

MIST/ ⌵ : For a single wiping cycle, move the lever to this (MIST/ ⌵) position and release it. The wipers will operate continuously if the lever is held in this position.

OFF / O : Wiper is not in operation

INT / --- : Wiper operates intermittently at the same wiping intervals. Use this mode in light rain or mist. To vary the speed setting, turn the speed control knob.

LO / 1 : Normal wiper speed

HI / 2 : Fast wiper speed

✻ NOTICE

If there is heavy accumulation of snow or ice on the windshield, defrost the windshield for about 10 minutes, or until the snow and/or ice is removed before using the windshield wipers to ensure proper operation. If you do not remove the snow and/or ice before using the wiper and washer, it may damage the wiper and washer system.

Auto control (if equipped)

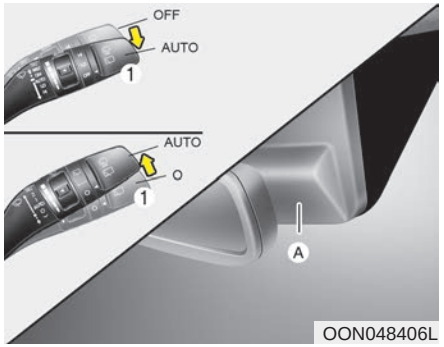

The rain sensor located on the upper end of the windshield glass senses the amount of rainfall and controls the wiping cycle for the proper interval. The more it rains, the faster the wiper operates. When the rain stops, the wiper stops.

To vary the speed setting, turn the speed control knob.

If the wiper switch is set in AUTO mode when the Engine Start/Stop button is ON position, the wiper will operate once to perform a self-check of the system. Set the wiper to OFF (O) position when the wiper is not in use.

ON ENG 4.qxp 3/18/2019 2:24 PM Page 142

⚠ CAUTION

When the Engine Start/Stop button is ON position and the windshield wiper switch is placed in the AUTO mode, use caution in the following situations to avoid any injury to the hands or other parts of the body:

- ***Do not touch the upper end of the windshield glass facing the rain sensor.***
- ***Do not wipe the upper end of the windshield glass with a damp or wet cloth.***
- ***Do not put pressure on the windshield glass.***

⚠ CAUTION

- ***When washing the vehicle, set the wiper switch in the OFF (O) position to stop the auto wiper operation.***

  The wiper may operate and be damaged if the switch is set in the AUTO mode while washing the vehicle.
- ***Do not remove the sensor cover located on the upper end of the passenger side windshield glass. Damage to system parts could occur and may not be covered by your vehicle warranty.***
- ***When starting the vehicle in winter, set the wiper switch in the OFF (O) position. Otherwise, wipers may operate and ice may damage the windshield wiper blades. Always remove all snow and ice and defrost the windshield properly prior to operating the windshield wipers.***

(Continued)

(Continued)

- ***When tinting the windshield, be careful of any fluid getting into the sensor located in the top center of the front windshield. It may damage the related parts.***

ON ENG 4.qxp 3/18/2019 2:24 PM Page 143

Windshield washers

■ Type A



OYP047377L

■ Type B



OYP048449L

In the OFF (O) position, pull the lever gently toward you to spray washer fluid on the windshield and to run the wipers 1-3 cycles.

Use this function when the windshield is dirty.

The spray and wiper operation will continue until you release the lever.

If the washer does not work, check the washer fluid level. If the fluid level is not sufficient, you will need to add appropriate non-abrasive windshield washer fluid to the washer reservoir.

The reservoir filler neck is located in the front of the engine compartment on the passenger side.

⚠ CAUTION

To prevent possible damage to the washer pump, do not operate the washer when the fluid reservoir is empty.

⚠ WARNING

Do not use the washer in freezing temperatures without first warming the windshield with the defrosters; the washer solution could freeze on the windshield and obscure your vision.

⚠ CAUTION

- ***To prevent possible damage to the wipers or windshield, do not operate the wipers when the windshield is dry.***
- ***To prevent damage to the wiper blades, do not use gasoline, kerosene, paint thinner, or other solvents on or near them.***
- ***To prevent damage to the wiper arms and other components, do not attempt to move the wipers manually.***
- ***To prevent possible damage to the wipers and washer system, use anti-freezing washer fluids in the winter season or cold weather.***

ON ENG 4.qxp 3/18/2019 2:24 PM Page 144

Rear window wiper and washer switch

■ Type A



OYP047378L

■ Type B



OYP048450L

The rear window wiper and washer switch is located at the end of the wiper and washer switch lever. Turn the switch to the desired position to operate the rear wiper and washer.

HI / 2 - Normal wiper operation
LO / 1 - Intermittent wiper operation
OFF / O - Wiper is not in operation

■ Type A



OYP047379L

■ Type B



OYP048451L

Push the lever away from you to spray rear washer fluid and to run the rear wipers 1~3 cycles. The spray and wiper operation will continue until you release the lever.

ON ENG 4.qxp 3/18/2019 2:24 PM Page 145

INTERIOR LIGHT

⚠ CAUTION

Do not use the interior lights for extended periods when the engine is not running.

It may cause battery discharge.

⚠ WARNING

Do not use the interior lights when driving in the dark. Accidents could happen because the view may be obscured by interior lights.

Automatic turn off function (if equipped)

The interior lights automatically turn off approximately 20 minutes after the Engine Start/Stop button is turned off.

If your vehicle is equipped with the theft alarm system, the interior lights automatically turns off approximately 5 seconds after the system is armed stage.

Map lamp



- (1) : Press the lamps to turn the front map lamps on and off.

ON ENG 4.qxp 3/18/2019 2:24 PM Page 146

• (2) :

- The map lamp and room lamp comes on when a door is opened. The lamps go out after approximately 30 seconds.
- The map lamp and room lamp comes on for approximately 30 seconds when doors are unlocked with a smart key as long as the doors are not opened.
- The map lamp and room lamp will stay on for approximately 20 minutes if a door is opened with the Engine start/stop button in the ACC or OFF position.
- The map lamp and room lamp will stay on continuously if the door is opened with the Engine Start/Stop button in the ON position.
- The map lamp and room lamp will go out immediately if the Engine start/stop button is changed to the ON position or all doors are locked.
- To turn off the DOOR mode, press the DOOR button (2) once again (not pressed).

✻ NOTICE

The DOOR mode and ROOM mode can not be selected at a time.

• (3):

The map lamp stays on at all times.

Room lamp

■ Type A

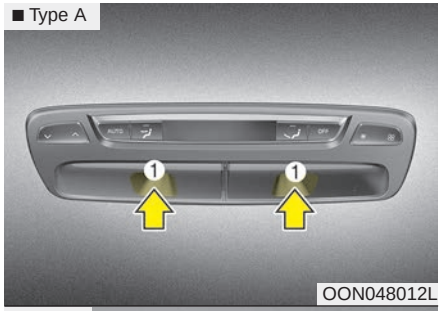

OON048012L

■ Type B

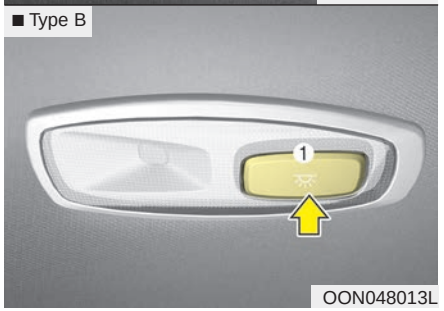

OON048013L

• (1) : The light stays on at all times.

ON ENG 4.qxp 3/18/2019 2:24 PM Page 147

Luggage lamp

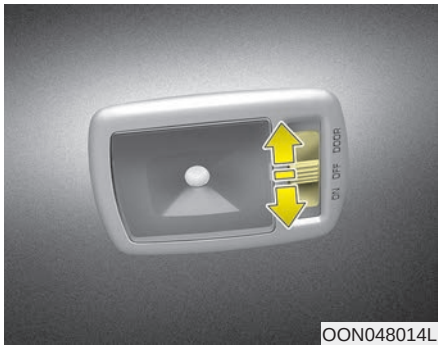

OON048014L

- DOOR : The luggage compartment lamp comes on when the tailgate is opened.
- OFF : The luggage compartment lamp is off.
- ON : The luggage compartment lamp stays on at all times.

Glove box lamp (if equipped)

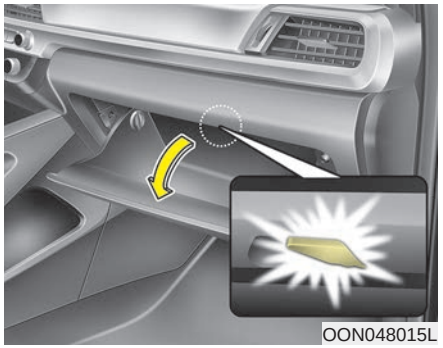
OON048015L

The glove box lamp comes on when the glove box is opened.

⚠ CAUTION

To prevent unnecessary charging system drain, close the glove box securely after using the glove box.

Vanity mirror lamp

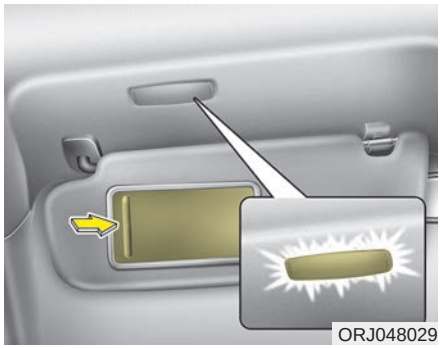
ORJ048029

Opening the lid of the vanity mirror will automatically turn on the mirror light.

⚠ CAUTION

To prevent unnecessary charging system drain, close the vanity mirror cover securely after using the mirror.

ON ENG 4.qxp 3/18/2019 2:24 PM Page 148

WELCOME SYSTEM (IF EQUIPPED)

Headlight (Headlamp) escort function

The headlights (and/or taillights) remain on for approximately 5 minutes after the engine is off or the Engine Start/Stop button is in the ACC position. However, if the driver's door is opened and closed, the headlights are turned off after 15 seconds.

The headlights can be turned off by pressing the lock button on the smart key twice or turning off the light switch from the headlight or Auto light position.

Interior light

When the interior light switch is in the DOOR position and all doors (and tailgate) are locked and closed, the room lamp will come on for 30 seconds if any of the below is performed.

- With the smart key system
  - When the door unlock button is pressed on the smart key.
  - When the button of the outside door handle is pressed.

At this time, if you press the door lock button, the lamps will turn off immediately.

Pocket lamp (if equipped)

When all doors are locked and closed, the pocket lamp will come on for 15 seconds if any of the below is performed.

- With the smart key system
  - When the door unlock button is pressed on the smart key.
  - When the button of the outside door handle is pressed.

At this time, if you press the door lock button, the lamps will turn off immediately.

ON ENG 4.qxp 3/18/2019 2:24 PM Page 149

DEFROSTER

⚠ CAUTION

To prevent damage to the conductors bonded to the inside surface of the rear window, never use sharp instruments or window cleaners containing abrasives to clean the window.

✻ NOTICE

If you want to defrost and defog the front windshield, refer to "Windshield defrosting and defogging" in this section.

Rear window defroster

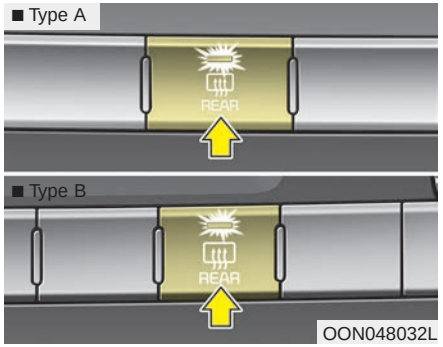

The defroster heats the window to remove frost, fog and thin ice from the rear window, while the engine is running.

To activate the rear window defroster, press the rear window defroster button located in the center facia switch panel. The indicator on the rear window defroster button illuminates when the defroster is ON.

If there is heavy accumulation of snow on the rear window, brush it off before operating the rear defroster.

The rear window defroster automatically turns off after approximately 20 minutes or when the Engine Start/Stop button is turned off. To turn off the defroster, press the rear window defroster button again.

Outside rearview mirror defroster (if equipped)

If your vehicle is equipped with the outside rearview mirror defrosters, they will operate at the same time you turn on the rear window defroster.

ON ENG 4.qxp 3/18/2019 2:24 PM Page 150

MANUAL CLIMATE CONTROL SYSTEM (IF EQUIPPED)



1. Fan speed control knob
2. Rear window defroster button
3. Air conditioning button
4. Mode selection knob
5. Air intake control button
6. Rear control button
7. Temperature control knob

⚠ CAUTION

Operating the blower when the Engine Start/Stop button is in the ON position could cause the battery to discharge. Operate the blower when the engine is running.

OON048300L

ON ENG 4.qxp 3/18/2019 2:25 PM Page 151

Heating and air conditioning

1. Start the engine.
2. Set the mode to the desired position.

   For improving the effectiveness of heating and cooling;

   - Heating:
   - Cooling:
3. Set the temperature control to the desired position.
4. Set the fan speed control to the desired speed.
5. If air conditioning is desired, turn the air conditioning system on.

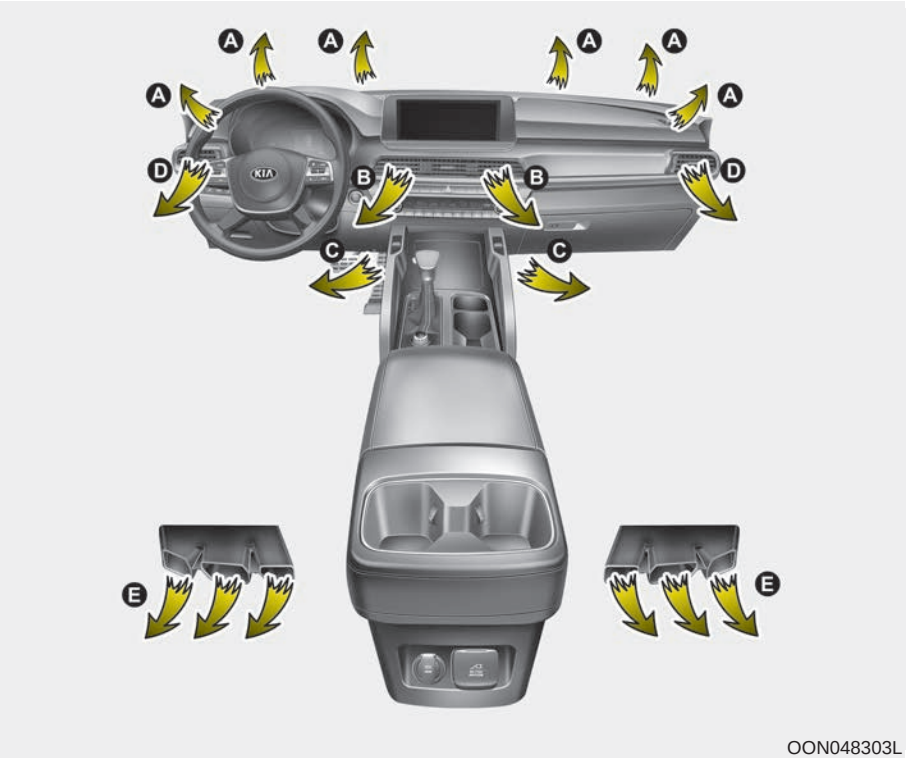

OON048303L

ON ENG 4.qxp 3/18/2019 2:25 PM Page 152

Mode selection

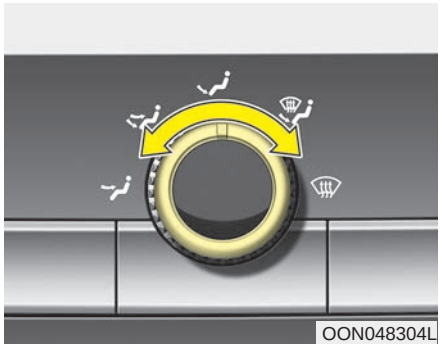

The mode selection knob controls the direction of the air flow through the ventilation system.

Air can be directed to the floor, dashboard outlets, or windshield. Five symbols are used to represent Face, Bi-Level, Floor, Floor-Defrost and Defrost air position.

Face-Level (B, D)

Air flow is directed toward the upper body and face. Additionally, each outlet can be controlled to direct the air discharged from the outlet.

Bi-Level (B, C, D, E)

Air flow is directed towards the face and the floor.

Floor-Level (A, C, D, E)

Most of the air flow is directed to the floor, with a small amount of the air being directed to the windshield and side window defrosters.

Floor/Defrost-Level (A, C, D, E)

Most of the air flow is directed to the floor and the windshield with a small amount directed to the side window defrosters.

Defrost-Level (A, D)

Most of the air flow is directed to the windshield with a small amount of air directed to the side window defrosters.

ON ENG 4.qxp 3/18/2019 2:25 PM Page 153

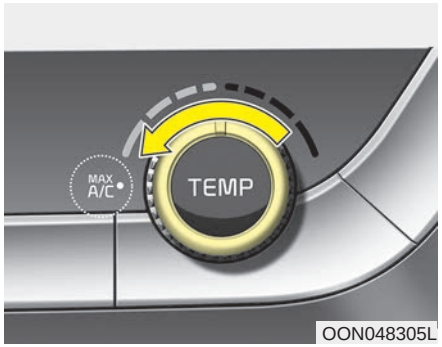

MAX A/C selection (B, D)

To operate the MAX A/C, turn the temperature knob to extreme left.

Air flow is directed toward the upper body and face.

In this mode, the air conditioning and the recirculated air position will be selected automatically.

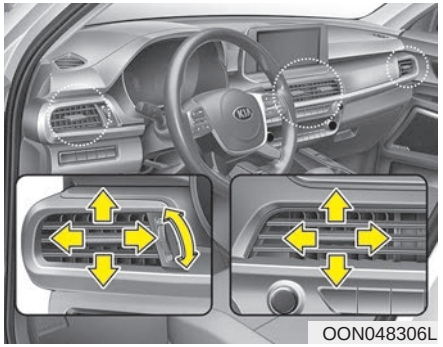

Instrument panel vents

The outlet vents can be opened or closed separately using the thumb-wheel or using the vent control lever.

Also, you can adjust the direction of air delivery from these vents using the vent control lever as shown.

Temperature control

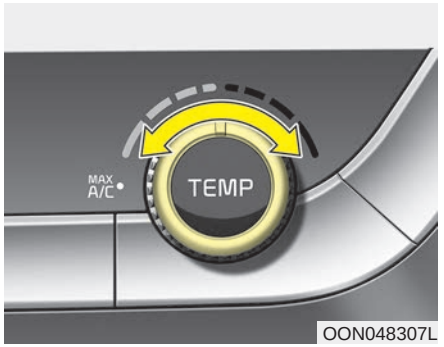

The temperature control knob allows you to control the temperature of the air flowing from the ventilation system. To change the air temperature in the passenger compartment, turn the knob to the right position for warm and hot air or left position for cooler air.

ON ENG 4.qxp 3/18/2019 2:25 PM Page 154

Air intake control

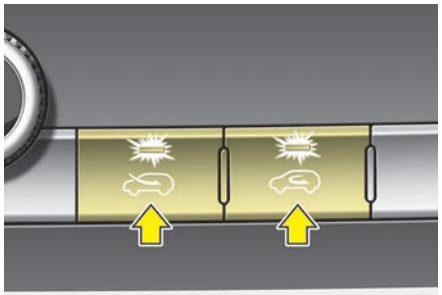

OON048335L

The air intake control is used to select the outside (fresh) air position or recirculated air position.

To change the air intake control position, press the control button.

Recirculated air position



With the recirculated air position selected, air from the passenger compartment will be drawn through the heating system and heated or cooled according to the function selected.

Outside (fresh) air position



With the outside (fresh) air position selected, air enters the vehicle from outside and is heated or cooled according to the function selected.

✻ NOTICE

Prolonged operation of the heater in the recirculated air position (without air conditioning selected) may cause fogging of the windshield and side windows and the air within the passenger compartment may become stale.

In addition, prolonged use of the air conditioning with the recirculated air position selected will result in excessively dry air in the passenger compartment.

ON ENG 4.qxp 3/18/2019 2:25 PM Page 155

⚠ WARNING

- **Continue using the climate control system in the recirculated air position may allow humidity to increase inside the vehicle which may fog the glass and obscure visibility.**
- **Do not sleep in a vehicle with the air conditioning or heating system on. It may cause serious harm or death due to a drop in the oxygen level and/or body temperature.**
- **Continue using the climate control system in the recirculated air position can cause drowsiness or sleepiness, and loss of vehicle control. Set the air intake control to the outside (fresh) air position as much as possible while driving.**

Fan speed control

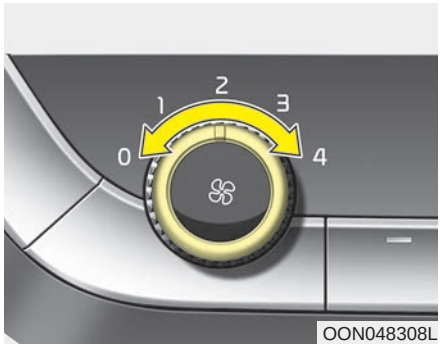

The Engine Start/Stop button must be in the ON position for fan operation.

The fan speed control knob allows you to control the fan speed of the air flowing from the ventilation system. To change the fan speed, turn the knob to the right for higher speed or left for lower speed.

Setting the fan speed control knob to the “0” position turns off the fan.

To turn off the blowers

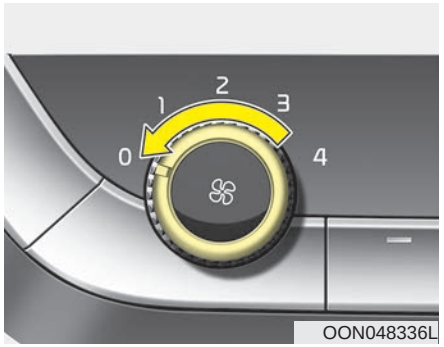

To turn off the blowers, turn the fan speed control knob to the “0” position.

ON ENG 4.qxp 3/18/2019 2:25 PM Page 156

Air conditioning

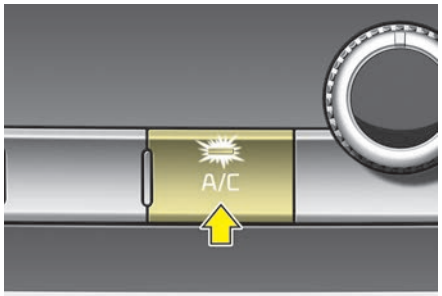

OON048309L

Press the A/C button to turn the air conditioning system on (indicator light will illuminate). Press the button again to turn the air conditioning system off.

ON ENG 4.qxp 3/18/2019 2:25 PM Page 157

■ Rear

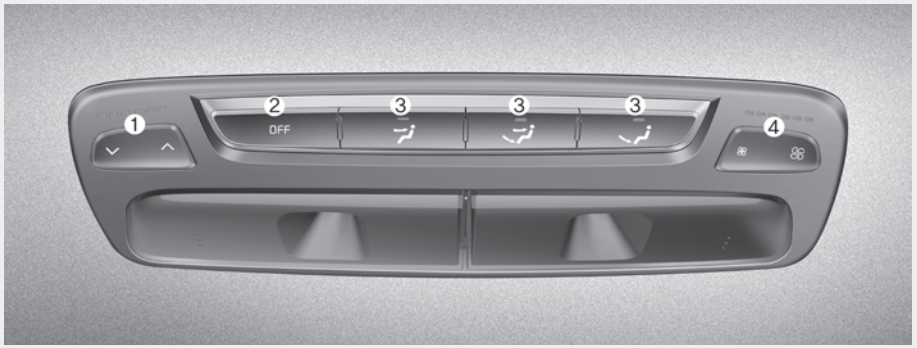

1. Rear temperature control button
2. Rear air conditioning OFF button
3. Rear mode selection button
4. Rear fan speed control button

OON048016L

ON ENG 4.qxp 3/18/2019 2:25 PM Page 158

Rear climate control

If you operate the rear temperature, rear fan speed or rear mode on the rear climate control panel, the corresponding rear temperature, rear fan speed or rear mode will operate independently regardless of the front climate control system operation.

Rear fan speed control

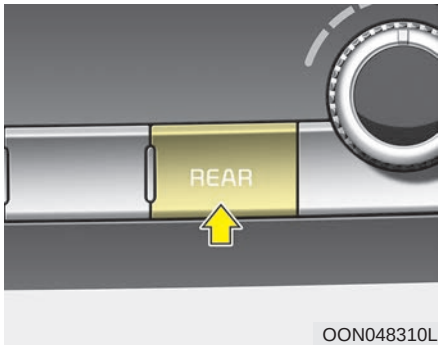

Front climate control panel

Press the REAR button and press the rear fan speed control button on the audio or multimedia screen. To change the fan speed, press (✤) the button for higher speed, or press the (✤) the button for lower speed.

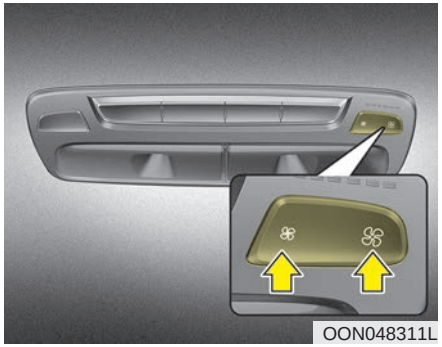

Rear climate control panel

To change the rear fan speed, press the button (✤) for higher speed, or press the button (✤) for lower speed.

ON ENG 4.qxp 3/18/2019 2:25 PM Page 159

Rear temperature control

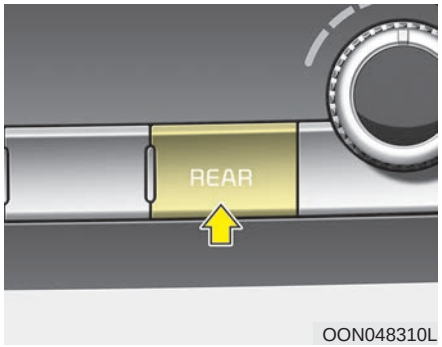

OON048310L

Front climate control panel

Press the REAR button and adjust the temperature on the audio or multimedia screen. Press the button (+) for warmer air or press the button (-) for cooler air.

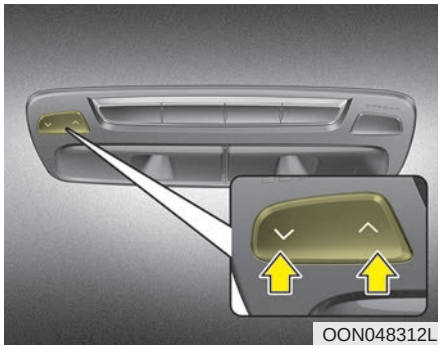

OON048312L

Rear climate control panel

To change the rear air temperature, press the button (^) for warmer air or press the button (v) for cooler air.

OFF mode

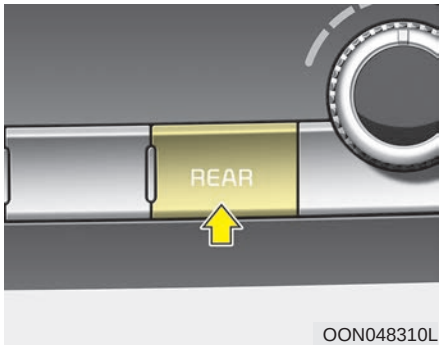

OON048310L

Front climate control panel

To turn off the rear climate control system, press the REAR button located on the front climate control panel and OFF button on the audio or multimedia screen.

ON ENG 4.qxp 3/18/2019 2:25 PM Page 160

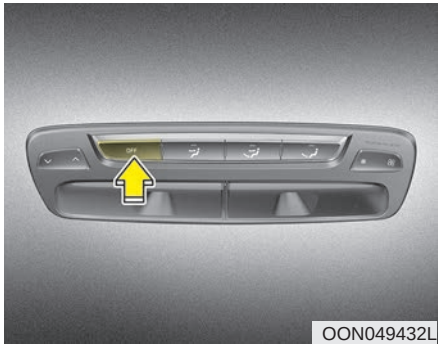

Rear climate control panel

To turn off the rear climate control system, press the rear blower OFF button.

Rear mode selection

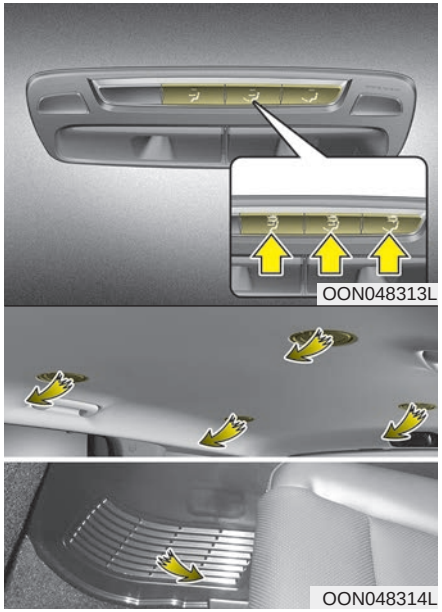

The rear mode is selected by pressing the rear mode selection button on the rear control panel as follows:

- : Rear air blows from the upper vents.
- : Rear air blows from the upper vents on the rear ceiling and the lower vents.
- : Rear air blows from the right side lower vents.

ON ENG 4.qxp 3/18/2019 2:25 PM Page 161

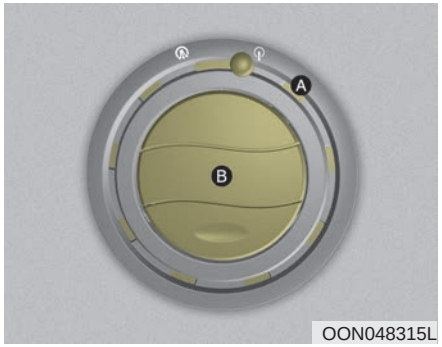

: Air discharged from [A] spreads over a wider area.

: Air discharged from [B] has a centered and direct flow.

Opening/closing the vent and adjusting the direction

You can set the direction of wind by adjusting the knob of air vents located above the 2nd-row and 3rd-row seats. Adjust the outer and central parts of the air vent to the desired positions.

Outer part of the vent (A)		Central part of the vent (B)	Description
Open		**Close**	The wind spreads widely around the passenger. However, the air volume may decrease.
Open		**Open**	The air is spread widely towards and around the passenger.
Close		**Open**	The wind blows only towards the passenger.

✻ NOTICE

If all the vents are closed, it may cause some noise. Always open 2 vents or more.

ON ENG 4.qxp 3/18/2019 2:25 PM Page 162

System operation

Ventilation

1. Set the mode to the position.
2. Set the air intake control to the outside (fresh) air position.
3. Set the temperature control to the desired position.
4. Set the fan speed control to the desired speed.

Heating

1. Set the mode to the position.
2. Set the air intake control to the outside (fresh) air position.
3. Set the temperature control to the desired position.
4. Set the fan speed control to the desired speed.
5. If dehumidified heating is desired, turn the air conditioning system on.

- If the windshield fogs up, set the mode to the or position.

Operation Tips

- To keep dust or unpleasant fumes from entering the vehicle through the ventilation system, temporarily set the air intake control to the recirculated air position. Be sure to return the control to the fresh air position when the irritation has passed to keep fresh air in the vehicle. This will help keep the driver alert and comfortable.
- Air for the heating/cooling system is drawn in through the grilles just ahead of the windshield. Care should be taken that these are not blocked by leaves, snow, ice or other obstructions.
- To prevent interior fog on the windshield, set the air intake control to the fresh air position and fan speed to the desired position, turn on the air conditioning system, and adjust the temperature control to desired temperature.

Air conditioning

Kia Air Conditioning Systems are filled with environmentally friendly refrigerant.

1. Start the engine. Push the air conditioning button.
2. Set the mode to the position.
3. Set the air intake control to the outside air or recirculated air position.
4. Adjust the fan speed control and temperature control to maintain maximum comfort.

ON ENG 4.qxp 3/18/2019 2:25 PM Page 163

✻ NOTICE

- **When using the air conditioning system, monitor the temperature gauge closely while driving up hills or in heavy traffic when outside temperatures are high. Air conditioning system operation may cause engine overheating. Continue to use the blower fan but turn the air conditioning system off if the temperature gauge indicates engine overheating.**
- **When opening the windows in humid weather air conditioning may create water droplets inside the vehicle. Since excessive water droplets may cause damage to electrical equipment, air conditioning should only be used with the windows closed.**

Air conditioning system operation tips

- If the vehicle has been parked in direct sunlight during hot weather, open the windows for a short time to let the hot air inside the vehicle escape.
- Use air conditioning to reduce humidity and moisture inside the vehicle on rainy or humid days.
- During air conditioning system operation, you may occasionally notice a slight change in engine speed as the air conditioning compressor cycles. This is a normal system operation characteristic.
- Use the air conditioning system every month only for a few minutes to ensure maximum system performance.
- When using the air conditioning system, you may notice clear water dripping (or even puddling) on the ground under the passenger side of the vehicle. This is a normal system operation characteristic.
- Operating the air conditioning system in the recirculated air position provides maximum cooling, however, continual operation in this mode may cause the air inside the vehicle to become stale.
- During cooling operation, you may occasionally notice a misty air flow because of rapid cooling and humid air intake. This is a normal system operation characteristic.

ON ENG 4.qxp 3/18/2019 2:25 PM Page 164

Climate control air filter

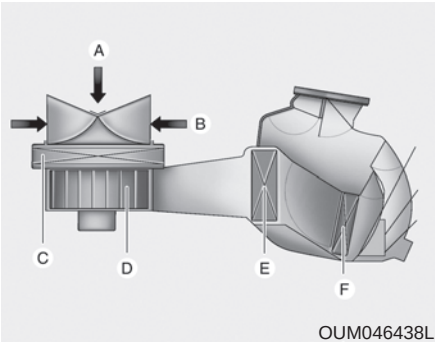

OUM046438L

A : Outside air
B : Recirculated air
C : Climate control air filter
D : Blower
E : Evaporator core
F : Heater core

The climate control air filter installed behind the glove box filters the dust or other pollutants that come into the vehicle from the outside through the heating and air conditioning system.

If dust or other pollutants accumulate in the filter over a period of time, the air flow from the air vents may decrease, resulting in moisture accumulation on the inside of the windshield even when the outside (fresh) air position is selected. If this happens, have the climate control air filter replaced by a professional workshop. Kia recommends to visit an authorized Kia dealer/service partner.

✻ NOTICE

- **Replace the filter according to the Maintenance Schedule.**
  If the car is being driven in severe conditions such as dusty, rough roads, more frequent climate control air filter inspections and changes are required.
- **When the air flow rate suddenly decreases, have the system checked by a professional workshop. Kia recommends to visit an authorized Kia dealer/service partner.**

Checking the amount of air conditioner refrigerant and compressor lubricant

When the amount of refrigerant is low, the performance of the air conditioning is reduced. Overfilling also has a bad influence on the air conditioning system.

Therefore, if abnormal operation is found, have the system inspected by a professional workshop.

Kia recommends to visit an authorized Kia dealer/service partner.

⚠ WARNING - Vehicles equipped with R-134a

Because the refrigerant is at very high pressure, the air conditioning system should only be serviced by trained and certified technicians. It is important that the correct type and amount of oil and refrigerant is used.

Otherwise, it may cause damage to the vehicle and personal injury.

ON ENG 4.qxp 3/18/2019 2:25 PM Page 165

AUTOMATIC CLIMATE CONTROL SYSTEM (IF EQUIPPED)



1. Driver's temperature control knob
2. AUTO (automatic control) button
3. OFF button
4. Front windshield defroster button
5. Fan speed control button
6. Rear control button
7. Mode selection button
8. Air conditioning button
9. Rear window defroster button
10. Air intake control button
11. Passenger's temperature control knob
12. SYNC button
13. A/C display

⚠ CAUTION

Operating the blower when the Engine Start/Stop button is in the ON position could cause the battery to discharge. Operate the blower when the engine is running.

OON048301L

ON ENG 4.qxp 3/18/2019 2:25 PM Page 166

Automatic heating and air conditioning



OON048316L

1. Press the AUTO button. The modes, fan speeds, air intake and air-conditioning will be controlled automatically according to the temperature setting.

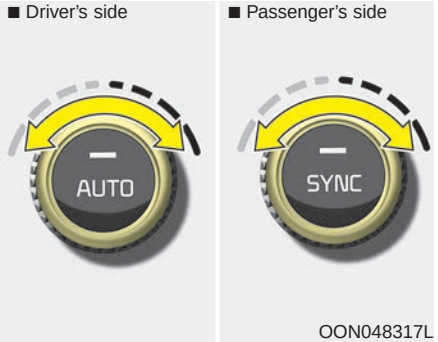

OON048317L

2. Turn the temperature control knob to the desired temperature.

✻ NOTICE

- **To turn the automatic operation off, select any button or switch of the following:**
  - **Mode selection button**
  - **Air conditioning button**
  - **Front windshield defroster button (Press the button one more time to deselect the front windshield defroster function. The 'AUTO' sign will illuminate on the information display once again.)**
  - **Fan speed control button**

  The selected function will be controlled manually while other functions operate automatically.
- **For your convenience and to improve the effectiveness of the climate control, use the AUTO button and set the temperature to 22°C/71°F (23°C/73°F- Except Europe).**

ON ENG 4.qxp 3/18/2019 2:26 PM Page 167

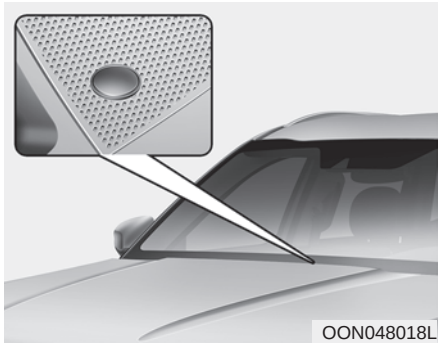
OON048018L

✻ NOTICE

Never place anything over the sensor located on the instrument panel to ensure better control of the heating and cooling system.

Manual heating and air conditioning

The heating and cooling system can be controlled manually by pressing buttons or turning knob(s) other than the AUTO button. In this case, the system works sequentially according to the order of buttons or knob(s) selected.

1. Start the engine.
2. Set the mode to the desired position.

   For improving the effectiveness of heating and cooling;

   - Heating:
   - Cooling:
3. Set the temperature control to the desired position.
4. Set the air intake control to the outside (fresh) air position.
5. Set the fan speed control to the desired speed.
6. If air conditioning is desired, turn the air conditioning system on.

Press the AUTO button in order to convert to full automatic control of the system.

Mode selection

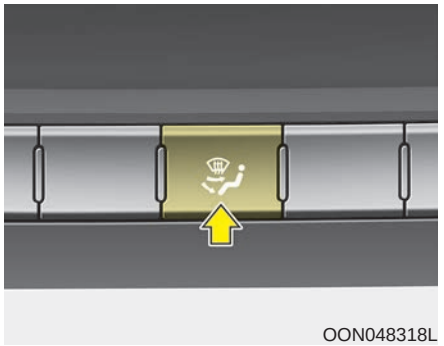
OON048318L

The mode selection button controls the direction of the air flow through the ventilation system.

The air flow outlet port is converted as follows:



Refer to the illustration in the “Manual climate control system”.

ON ENG 4.qxp 3/18/2019 2:26 PM Page 168

Face-Level (B, D)

Air flow is directed toward the upper body and face. Additionally, each outlet can be controlled to direct the air discharged from the outlet.

Bi-Level (B, C, D, E)

Air flow is directed towards the face and the floor.

Floor-Level (A, C, D, E)

Most of the air flow is directed to the floor, with a small amount of the air being directed to the windshield and side window defrosters.

Floor/Defrost-Level (A, C, D, E)

Most of the air flow is directed to the floor and the windshield with a small amount directed to the side window defrosters.

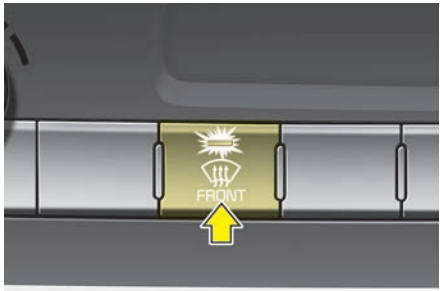

OON048319L

Defrost-Level (A, D)

Most of the air flow is directed to the windshield with a small amount of air directed to the side window defrosters.

ON ENG 4.qxp 3/18/2019 2:26 PM Page 169

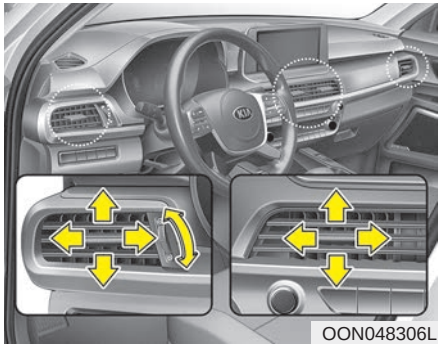
OON048306L

Instrument panel vents

The outlet vents can be opened or closed separately using the thumb-wheel or using the vent control lever. Also, you can adjust the direction of air delivery from these vents using the vent control lever as shown.

Temperature control

■ Driver's side ■ Passenger's side

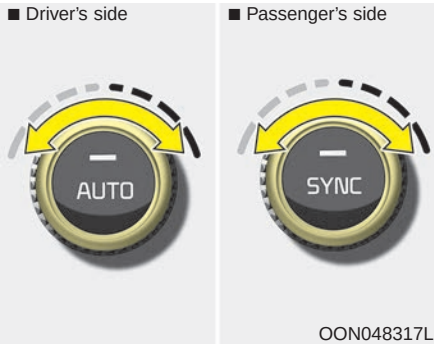

OON048317L

The temperature will increase to the maximum (HI) by turning the knob to the extreme right.

The temperature will decrease to the minimum (Lo) by turning the knob to the extreme left.

When turning the knob, the temperature will increase or decrease by 0.5°C/1°F. When set to the lowest temperature setting, the air conditioning will operate continuously.



OON048320L

Adjusting the driver and passenger side temperature, fan speed and air flow direction equally

- Press the "SYNC" button to adjust the driver and front/rear passenger side temperature, fan speed and air flow direction equally.

  The front and rear passenger side temperature , fan speed and air flow direction will be set to the same temperature, fan speed and air flow direction as the driver's side.
- Turn the driver side temperature control knob. The driver and front/rear passenger side temperature will be adjusted equally.

ON ENG 4.qxp 3/18/2019 2:26 PM Page 170

Press the fan speed control button. The driver and front/rear passenger side fan speed will be adjusted equally.

Press the driver side mode selection button. The driver and front/rear passenger side air flow will be adjusted equally.

- When the rear climate control is turned ON, the fan speed and air flow direction will automatically follow the first row setting.

Adjusting the driver and passenger side temperature, fan speed and air flow direction individually

Press the “SYNC” button again to adjust the driver and front/rear passenger side temperature, fan speed and air flow direction individually.

Temperature conversion

You can switch the temperature mode from Centigrade to Fahrenheit as follows:

While pressing the OFF button, press the AUTO button for 3 seconds or more.

The display will change from Centigrade to Fahrenheit, or from Fahrenheit to Centigrade.

If the battery has been discharged or disconnected, the temperature mode display will reset to Centigrade.

Air intake control

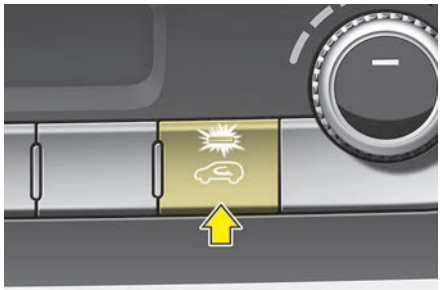

OON048321L

This is used to select the outside (fresh) air position or recirculated air position.

To change the air intake control position, push the control button.

ON ENG 4.qxp 3/18/2019 2:26 PM Page 171

Recirculated air position



With the recirculated air position selected, air from the passenger compartment will be drawn through the heating system and heated or cooled according to the function selected.

Outside (fresh) air position



With the outside (fresh) air position selected, air enters the vehicle from outside and is heated or cooled according to the function selected.

✻ NOTICE

Prolonged operation of the heater in the recirculated air position (without air conditioning selected) may cause fogging of the windshield and side windows and the air within the passenger compartment may become stale.
In addition, prolonged use of the air conditioning with the recirculated air position selected will result in excessively dry air in the passenger compartment.

⚠ WARNING

- **Continue using the climate control system in the recirculated air position may allow humidity to increase inside the vehicle which may fog the glass and obscure visibility.**
- **Do not sleep in a vehicle with the air conditioning or heating system on. It may cause serious harm or death due to a drop in the oxygen level and/or body temperature.**
- **Continue using the climate control system in the recirculated air position can cause drowsiness or sleepiness, and loss of vehicle control. Set the air intake control to the outside (fresh) air position as much as possible while driving.**

ON ENG 4.qxp 3/18/2019 2:26 PM Page 172

Fan speed control

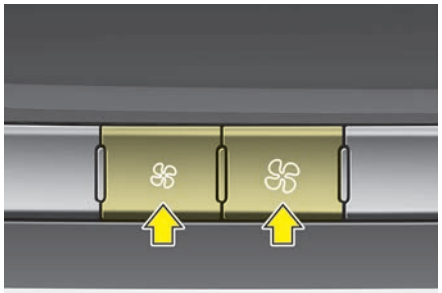

OON048322L

The fan speed can be set to the desired speed by pushing the fan speed control button.

The higher the fan speed is, the more air is delivered.

Pressing the OFF button turns off the fan.

Air conditioning

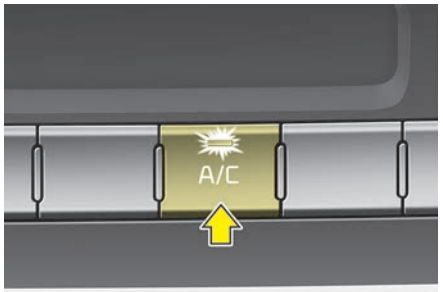

OON048323L

Press the A/C button to turn the air conditioning system on (indicator light will illuminate).

Press the button again to turn the air conditioning system off.

OFF mode

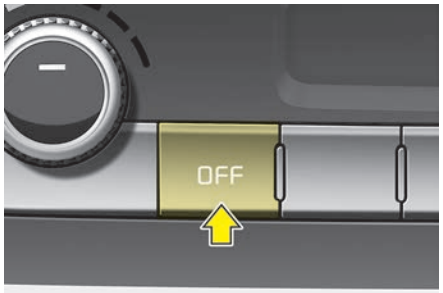

OON048324L

Press the OFF button to turn off the front and rear air climate control system. However, you can still operate the mode and air intake buttons as long as the Engine Start/Stop button is in the ON position.

ON ENG 4.qxp 3/18/2019 2:26 PM Page 173

■ Rear



1. Rear temperature control button
2. Rear AUTO button
3. Rear mode selection button
4. Rear A/C display
5. Rear air conditioning OFF button
6. Rear fan speed control button

OON048017L

ON ENG 4.qxp 3/18/2019 2:26 PM Page 174

Rear climate control

- When the “SYNC” is ON, the rear temperature, rear fan speed and rear mode is controlled automatically by the front climate control system.
- If you operate the rear temperature, rear fan speed or rear mode on the rear climate control panel, the corresponding rear temperature, rear fan speed or rear mode will operate independently regardless of the front climate control system operation.

Rear fan speed control

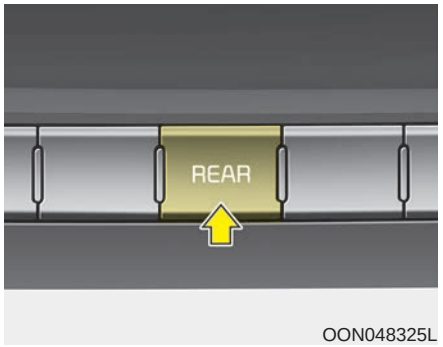

OON048325L

Front climate control panel

Press the REAR button and press the rear fan speed control button on the audio or multimedia screen. To change the fan speed, press (✤) the button for higher speed, or press the (✤) the button for lower speed.

The fan speed is displayed on the screen.

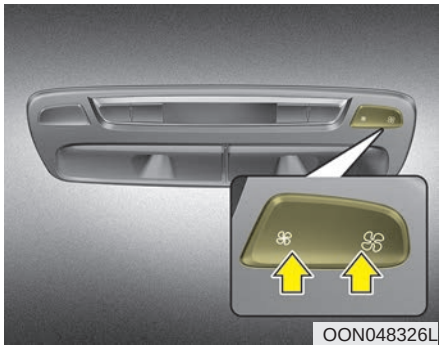

OON048326L

Rear climate control panel

Adjust the fan speed by pressing the rear fan speed control button. To change the speed, press the button (✤) for higher speed, or press the button (✤) for lower speed. The fan speed is displayed on the screen.

ON ENG 4.qxp 3/18/2019 2:26 PM Page 175

Rear temperature control

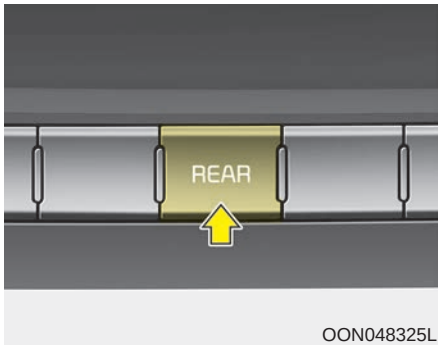

OON048325L

Front climate control panel

Press the REAR button and adjust the temperature on the audio or multimedia screen. Press the button (+) for warmer air or press the button (-) for cooler air.

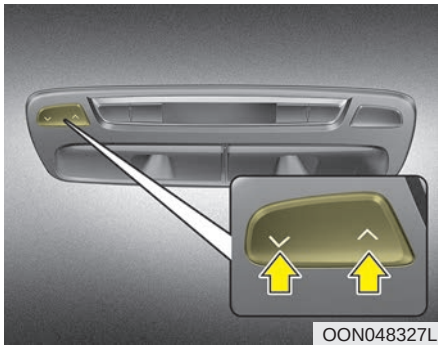

OON048327L

Rear climate control panel

Adjust the temperature by pressing the rear temperature control button. To change the temperature, press the button (∧) for warmer air or press the button (∨) for cooler air.

The temperature is displayed on the screen.

OFF mode

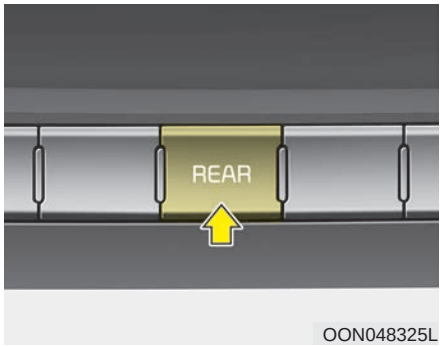

OON048325L

Front climate control panel

To turn off the rear climate control system, press the REAR button located on the front climate control panel and OFF button on the audio or multimedia screen.

ON ENG 4.qxp 3/18/2019 2:26 PM Page 176

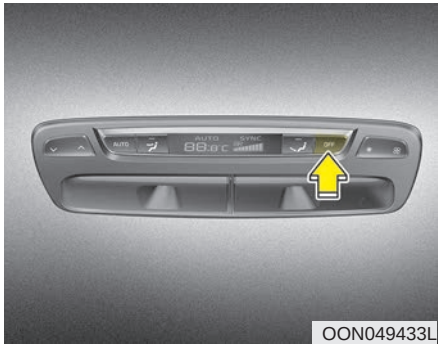

Rear climate control panel

To turn off the rear climate control system, press the rear blower OFF button.

Rear mode selection

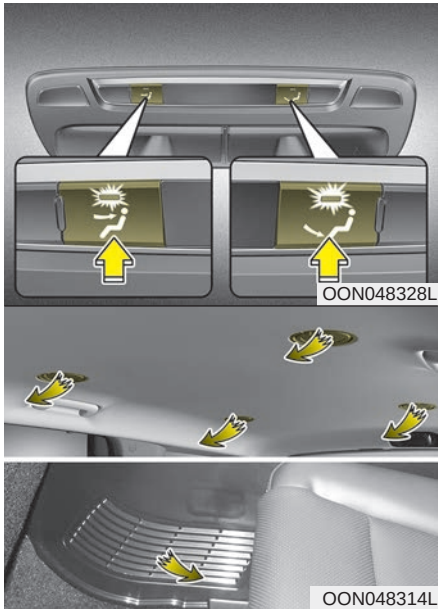

The rear mode is selected by pressing the rear mode selection button on the rear control panel as follows:

- : Rear air blows from the upper vents.
- : Rear air blows from the upper vents on the rear ceiling and the lower vents.
- : Rear air blows from the right side lower vents.

ON ENG 4.qxp 3/18/2019 2:26 PM Page 177

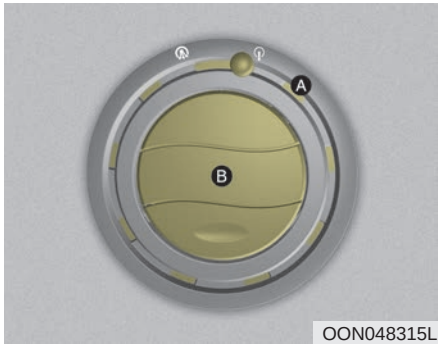

OON048315L

: Air discharged from [A] spreads over a wider area.

: Air discharged from [B] has a centered and direct flow.

Opening/closing the vent and adjusting the direction

You can set the direction of wind by adjusting the knob of air vents located above the 2nd-row and 3rd-row seats. Adjust the outer and central parts of the air vent to the desired positions.

Outer part of the vent (A)		Central part of the vent (B)	Description
Open		**Close**	The wind spreads widely around the passenger. However, the air volume may decrease.
Open		**Open**	The air is spread widely towards and around the passenger.
Close		**Open**	The wind blows only towards the passenger.

✻ NOTICE

If all the vents are closed, it may cause some noise. Always open 2 vents or more.

ON ENG 4.qxp 3/18/2019 2:26 PM Page 178

System operation

Ventilation

1. Set the mode to the position.
2. Set the air intake control to the outside (fresh) air position.
3. Set the temperature control to the desired position.
4. Set the fan speed control to the desired speed.

Heating

1. Set the mode to the position.
2. Set the air intake control to the outside (fresh) air position.
3. Set the temperature control to the desired position.
4. Set the fan speed control to the desired speed.
5. If dehumidified heating is desired, turn the air conditioning system on.

- If the windshield fogs up, set the mode to the or position.

Operation Tips

- To keep dust or unpleasant fumes from entering the vehicle through the ventilation system, temporarily set the air intake control to the recirculated air position. Be sure to return the control to the fresh air position when the irritation has passed to keep fresh air in the vehicle. This will help keep the driver alert and comfortable.
- Air for the heating/cooling system is drawn in through the grilles just at the base of the windshield. Care should be taken that these are not blocked by leaves, snow, ice or other obstructions.
- To prevent interior fog on the windshield, set the air intake control to the fresh air position and fan speed to the desired position, turn on the air conditioning system, and adjust the temperature control to desired temperature.

Air conditioning

Kia Air Conditioning Systems are filled with environmentally friendly refrigerant.

1. Start the engine. Push the air conditioning button.
2. Set the mode to the position.
3. Set the air intake control to the outside air or recirculated air position.
4. Adjust the fan speed control and temperature control to maintain maximum comfort.

ON ENG 4.qxp 3/18/2019 2:26 PM Page 179

✻ NOTICE

- **When using the air conditioning system, monitor the temperature gauge closely while driving up hills or in heavy traffic when outside temperatures are high. Air conditioning system operation may cause engine overheating. Continue to use the blower fan but turn the air conditioning system off if the temperature gauge indicates engine overheating.**
- **The air conditioning system should only be used with the windows and sunroof closed to prevent condensation inside the vehicle that may cause damage to electrical components.**

Air conditioning system operation tips

- If the vehicle has been parked in direct sunlight during hot weather, open the windows for a short time to let the hot air inside the vehicle escape.
- Use air conditioning to reduce humidity and moisture inside the vehicle on rainy or humid days.
- During air conditioning system operation, you may occasionally notice a slight change in engine speed as the air conditioning compressor cycles. This is a normal system operation characteristic.
- To ensure maximum system performance, the air conditioning system should be ran for a few minutes each month.
- When using the air conditioning system, you may notice clear water dripping (or even puddling) on the ground under the passenger side of the vehicle. This is a normal system operation characteristic.
- Operating the air conditioning system in the recirculated air position provides maximum cooling, however, continual operation in this mode may cause the air inside the vehicle to become stale.
- During cooling operation, you may occasionally notice a misty air flow because of rapid cooling and humid air intake. This is a normal system operation characteristic.

ON ENG 4.qxp 3/18/2019 2:26 PM Page 180

Climate control air filter

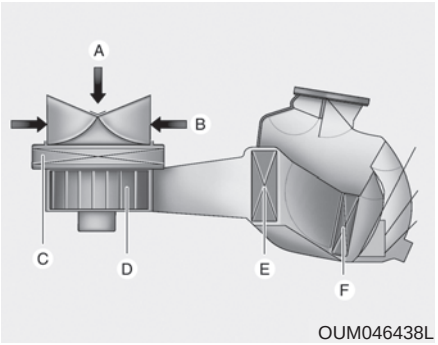

OUM046438L

A : Outside air
B : Recirculated air
C : Climate control air filter
D : Blower
E : Evaporator core
F : Heater core

The climate control air filter installed behind the glove box filters the dust or other pollutants that come into the vehicle from the outside through the heating and air conditioning system.

If dust or other pollutants accumulate in the filter over a period of time, the air flow from the air vents may decrease, resulting in moisture accumulation on the inside of the windshield even when the outside (fresh) air position is selected. If this happens, have the climate control air filter replaced by a professional workshop. Kia recommends to visit an authorized Kia dealer/service partner.

✻ NOTICE

- **Replace the filter according to the Maintenance Schedule.**
  If the car is being driven in severe conditions such as dusty, rough roads, more frequent climate control air filter inspections and changes are required.
- **When the air flow rate suddenly decreases, have the system checked by a professional workshop. Kia recommends to visit an authorized Kia dealer/service partner.**

Checking the amount of air conditioner refrigerant and compressor lubricant

When the amount of refrigerant is low, the performance of the air conditioning is reduced. Overfilling also has a bad influence on the air conditioning system.

Therefore, if abnormal operation is found, have the system inspected by a professional workshop.

Kia recommends to visit an authorized Kia dealer/service partner.

⚠ WARNING - Vehicles equipped with R-134a

Because the refrigerant is at very high pressure, the air conditioning system should only be serviced by trained and certified technicians. It is important that the correct type and amount of oil and refrigerant is used.

Otherwise, it may cause damage to the vehicle and personal injury.

ON ENG 4.qxp 3/18/2019 2:26 PM Page 181

WINDSHIELD DEFROSTING AND DEFOGGING

⚠ WARNING - Windshield heating

Do not use the or position during cooling operation in extremely humid weather. The difference between the temperature of the outside air and the windshield could cause the outer surface of the windshield to fog up, causing loss of visibility. In this case, set the mode selection to the position and fan speed control to the lower speed.

- For maximum defrosting, set the temperature control to the extreme right/hot position and the fan speed control to the highest speed.
- If warm air to the floor is desired while defrosting or defogging, set the mode to the floor-defrost position.
- Before driving, clear all snow and ice from the windshield, rear window, outside rear view mirrors, and all side windows.
- Clear all snow and ice from the hood and air inlet in the cowl grill to improve heater and defroster efficiency and to reduce the probability of fogging up the inside of the windshield.

Manual climate control system

To defog inside windshield

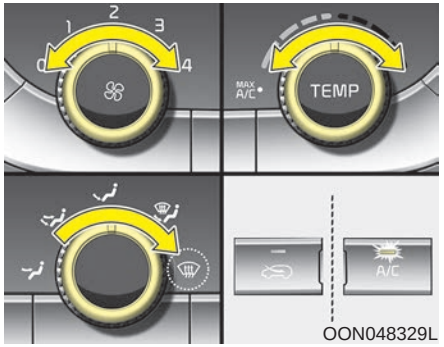

1. Select any fan speed except “0” position.
2. Select desired temperature.
3. Select the or position.
4. The outside (fresh) air will be selected automatically. If the position is selected, air conditioning will also be selected automatically.

If the air conditioning and/or outside (fresh) air position are not selected automatically, press the corresponding button manually.

ON ENG 4.qxp 3/18/2019 2:27 PM Page 182

To defrost outside windshield

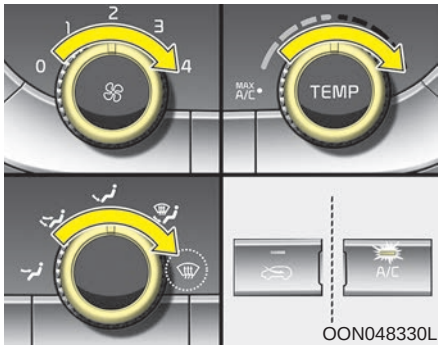

1. Set the fan speed to the highest position.
2. Set the temperature to the extreme hot position.
3. Select the position.
4. The outside (fresh) air and air conditioning will be selected automatically.

Automatic climate control system

To defog inside windshield

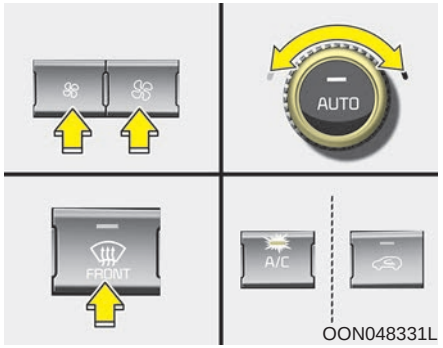

1. Set the fan speed to the desired position.
2. Select desired temperature.
3. Press the defroster button ( ).
4. The air conditioning will turn on according to the detected ambient temperature and outside (fresh) air position will be selected automatically.

If the air conditioning and outside (fresh) air position are not selected automatically, adjust the corresponding button manually. If the position is selected, lower fan speed is adjusted to a higher fan speed.

ON ENG 4.qxp 3/18/2019 2:27 PM Page 183

To defrost outside windshield

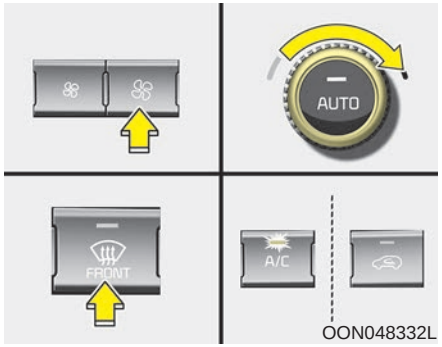

OON048332L

1. Set the fan speed to the highest position.
2. Set the temperature to the extreme hot (HI) position.
3. Press the defroster button ( ).
4. The air conditioning will turn on according to the detected ambient temperature and outside (fresh) air position will be selected automatically.

Defogging logic (if equipped)

To reduce the probability of fogging up the inside of the windshield, the air intake or air conditioning are controlled automatically according to certain conditions such as or position. To cancel or return the defogging logic, do the following.

Manual climate control system

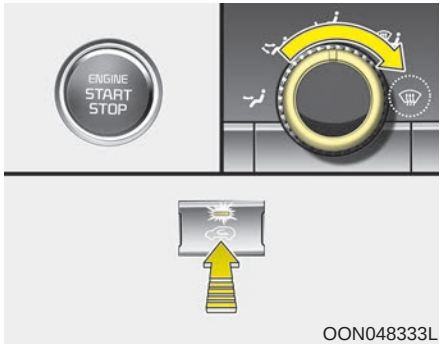

OON048333L

1. Turn the Engine Start/Stop to the ON position.
2. Press the defroster button ( ).
3. Within 10 seconds after pressing the defroster button, press the air intake control button at least 5 times within 3 seconds.

The indicator on the air intake button will blink 3 times. It indicates that the defogging logic is canceled or returned to the programmed status.

ON ENG 4.qxp 3/18/2019 2:27 PM Page 184

If the battery has been discharged or disconnected, it resets to the defog logic status.

Automatic climate control system

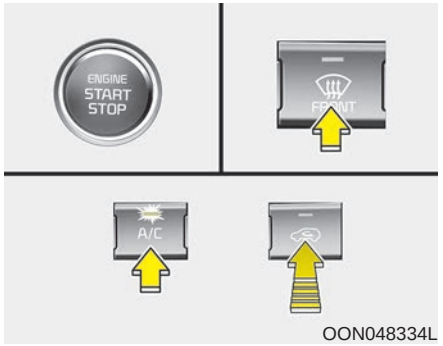

OON048334L

1. Turn the Engine Start/Stop to the ON position.
2. Press the defroster button ( ).
3. While pressing the air conditioning button (A/C), press the air intake control button at least 5 times within 3 seconds.

The indicator on the air intake button will blink 3 times. It indicates that the defogging logic is canceled or returned to the programmed status.

If the battery has been discharged or disconnected, it resets to the defog logic status.

Auto defogging system (Only for automatic climate control system, if equipped)

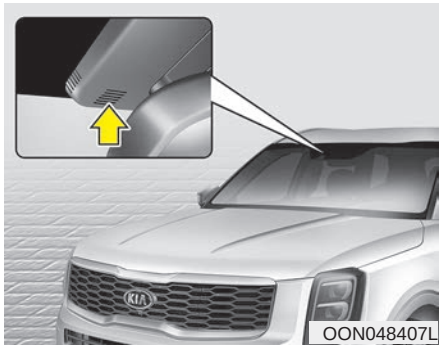

OON048407L

Auto defogging reduces the possibility of fogging up the inside of the windshield by automatically sensing the moisture of inside the windshield.

The auto defogging system operates when the AUTO mode is on.

ON ENG 4.qxp 3/18/2019 2:27 PM Page 185



This indicator illuminates when the auto defogging system senses the moisture of inside the windshield and operates. If excessive moisture is in the vehicle, the auto defogging system will turn on the air conditioning, change the air mode to (FRESH), adjust the airflow to defrost mode, and increase the air speed.

To cancel or reset the Auto Defogging System

Press the front windshield defroster button for 3 seconds when the Engine Start/Stop button is in the ON position.

When the ADS system is canceled, Indicator on the button will blink 3 times per 0.5 sec and the position “ADS OFF” will be displayed on the climate control information screen.

To reset the ADS system to ON, hold the front windshield defrost for 0.25 sec and the "ADS OFF" will be removed from the climate control screen.

ON ENG 4.qxp 3/18/2019 2:27 PM Page 186

CLIMATE CONTROL ADDITIONAL FEATURES

Sunroof inside air recirculation (if equipped)

If the sunroof opens while the heater or Air Conditioning system operates, the outside (fresh) air will be selected automatically for ventilating the car. Then, if you select the recirculated air position, the outside (fresh) air will be selected automatically after 3 minutes.

If you close the sunroof, the intake mode will be changed to the previous selected mode.

Automatic ventilation (if equipped)

The system automatically selects the outside (fresh) air position when the climate control system operates over a certain period of time (approximately 30 minutes) in low temperature with the recirculated air position selected.

To cancel or reset the Automatic Ventilation

When the air conditioning system is on, select Face Level mode and while pressing the A/C button, press the recirculated air position button five times within three seconds.

When the automatic ventilation is canceled, the indicator blinks 3 times. When the automatic ventilation is activated, the indicator blinks 6 times.

ON ENG 4.qxp 3/18/2019 2:27 PM Page 187

STORAGE COMPARTMENT

These compartments can be used to store small items.

⚠ CAUTION

- ***To avoid possible theft, do not leave valuables in the storage compartment.***
- ***Always keep the storage compartment covers closed while driving. Do not attempt to place so many items in the storage compartment that the storage compartment cover cannot close securely.***

⚠ WARNING - Flammable materials

Do not store cigarette lighters, propane cylinders, or other flammable/explosive materials in the vehicle. These items may catch fire and/or explode if the vehicle is exposed to hot temperatures for extended periods.

Center console storage



To open the center console storage, pull up the lever.

Glove box

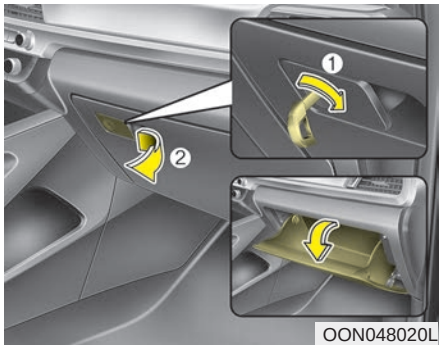

The glove box can be locked and unlocked with the mechanical key (1). To open the glove box, pull the lever (2).

Close the glove box after use.

ON ENG 4.qxp 3/18/2019 2:27 PM Page 188

⚠ WARNING

To reduce the risk of injury in an accident or sudden stop, always keep the glove box door closed while driving.

⚠ CAUTION

Do not keep food in the glove box for a long time.

Sunglass holder

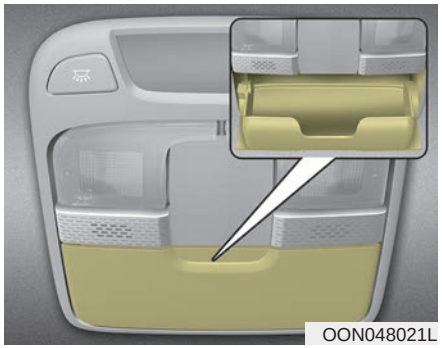

OON048021L

To open the sunglass holder, press the cover and the holder will slowly open. Place your sunglasses with the lenses facing out. To close the sunglass holder, push it up.

⚠ WARNING

- **Do not keep objects except sunglasses inside the sunglass holder. Such objects can be thrown from the holder in the event of a sudden stop or an accident, possibly injuring the passengers in the vehicle.**
- **Do not open the sunglass holder while the vehicle is moving. The rear view mirror of the vehicle can be blocked by an opened sunglass holder.**
- **Do not put the glasses forcibly into a sunglass holder to prevent breakage or deformation of the glasses. It may cause personal injury if you try to open it forcibly when the glasses are jammed in the holder.**

ON ENG 4.qxp 3/18/2019 2:27 PM Page 189

Luggage box

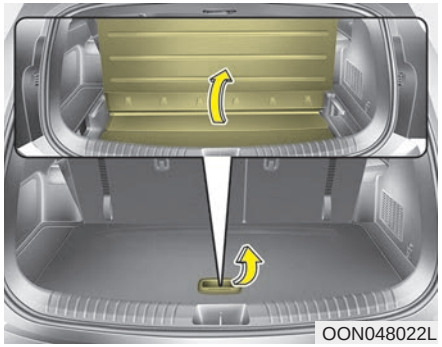
OON048022L

You can place a first aid kit, a reflector triangle, tools, etc. in the box for easy access.

Grasp the handle on the edge of the cover and lift it.

ON ENG 4.qxp 3/18/2019 2:27 PM Page 190

INTERIOR FEATURES

Cigarette lighter (if equipped)

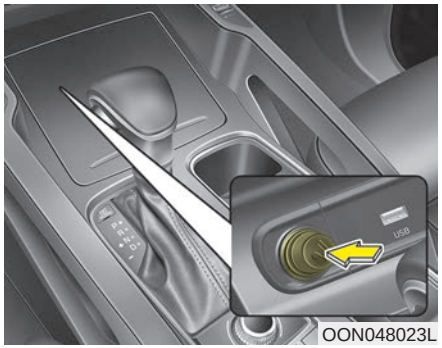

For the cigarette lighter to work, the Engine Start/Stop button must be in the ACC position or the ON position.

To use the cigarette lighter, push it all the way into its socket. When the element has heated, the lighter will pop out to the “ready” position.

Kia recommends to use parts for replacement from an authorized Kia dealer/service partner.

⚠ WARNING

- **Do not hold the lighter in after it is already heated because it will overheat.**
- **If the lighter does not pop out within 30 seconds, remove it to prevent overheating.**
- **Do not insert foreign objects into the socket of the cigarette lighter. It may damage the cigarette lighter.**

⚠ CAUTION

The use of plug-in accessories (shavers, hand-held vacuums, and coffee pots, etc.) may damage the socket or cause electrical failure.

Ashtray (if equipped)

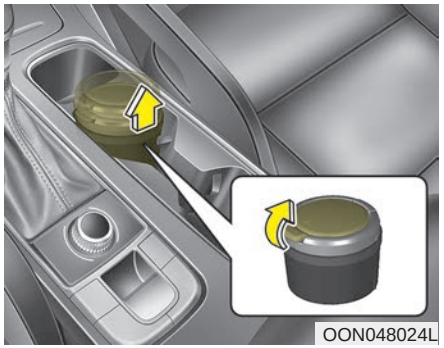

To use the ashtray, open the cover.

To clean or empty the ashtray, pull it out.

ON ENG 4.qxp 3/18/2019 2:27 PM Page 191

⚠ WARNING - Ashtray use

- **Do not use the vehicle's ashtrays as waste receptacles.**
- **Putting lit cigarettes or matches in an ashtray with other combustible materials may cause a fire.**

Cup holder

⚠ WARNING - Hot liquids

- **Do not place uncovered cups of hot liquid in the cup holder while the vehicle is in motion. If the hot liquid spills, you may burn yourself. Such a burn to the driver could lead to loss of control of the vehicle.**
- **To reduce the risk of a personal injury in the event of a sudden stop or collision, do not place uncovered or unsecured bottles, glasses, cans, etc., in the cup holder while the vehicle is in motion.**
- **If uncovered cups and cans containing any form of liquid are put into the front/center seat cup holders and the vehicle brakes heavily, the liquid may flow into the narrow openings around cup holders and console, and soak into the vehicle's internal electrical system. To avoid subsequent system malfunction, always firmly cover any container holding liquid.**

⚠ WARNING

Keep cans or bottles out of direct sun light and do not put them in a vehicle that is heated up. It may explode.

✻ NOTICE

- **Keep your drinks sealed while driving to prevent spilling your drink. If liquid spills, it may get into the vehicle's electrical/electronic system and damage electrical/electronic parts.**
- **When cleaning spilled liquids, do not dry the cup holder at high temperature. This may damage the cup holder.**

ON ENG 4.qxp 3/18/2019 2:27 PM Page 192

■ Front

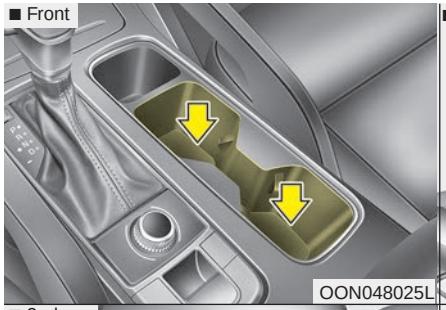

OON048025L

■ 2nd row - Center (if equipped)

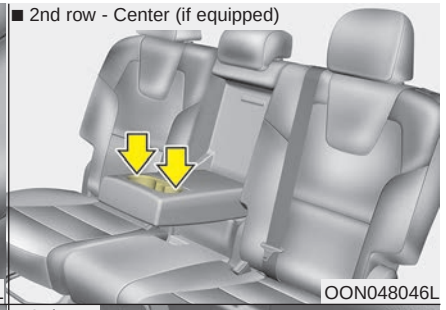

OON048046L

■ 2nd row

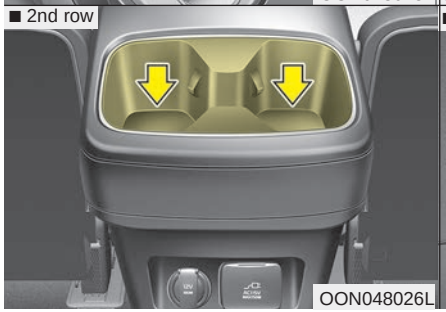

OON048026L

■ 3rd row

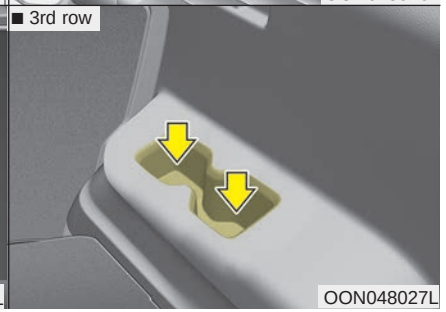

OON048027L

Cups or small beverage cans may be placed in the cup holders.

2nd row center (if equipped)

Pull the armrest down to use the cup holders.

Sunvisor

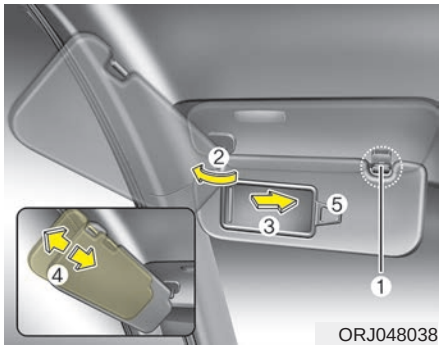

ORJ048038

* The actual sunvisor lamp in the vehicle may differ from the illustration.

Use the sunvisor to shield direct light through the front or side windows.

To use the sunvisor, pull it downward.

To use the sunvisor for the side window, pull it downward, unsnap it from the bracket (1) and swing it to the side (2).

To use the vanity mirror, pull down the visor and slide the mirror cover (3).

Adjust the sunvisor forward or backward (4) as needed.

ON ENG 4.qxp 3/18/2019 2:27 PM Page 193

The ticket holder (5) is provided for holding a tollgate ticket.

⚠ CAUTION

To prevent unnecessary charging system drain, close the vanity mirror cover securely after using the mirror.

Seat warmer (if equipped)

■ Front seat

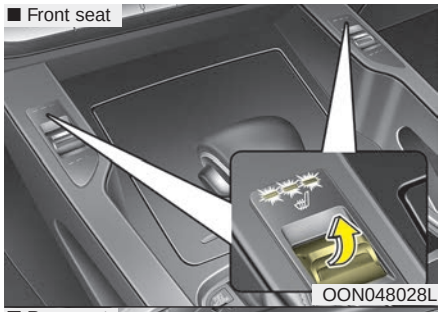

OON048028L

■ Rear seat

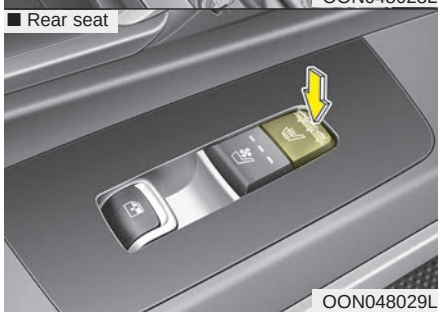

OON048029L

The seat warmer is provided to warm the front seats during cold weather.

With the Engine Start/Stop button in the ON position, push either of the toggle switch up (front seat) or push either of the switches (rear seat) to warm the front seat or the rear seat.

During mild weather or under conditions where the operation of the seat warmer is not needed, keep the switches in the "OFF" position.

▶ Temperature control (Manual)

- Each time you push the toggle switch up (front seat) or press the switch (rear seat), the temperature setting of the seat will change as follows :

OFF→HIGH( )→MIDDLE( )→LOW( )

- The seat warmer defaults to the OFF position whenever the Engine Start/Stop button is turned on.

ON ENG 4.qxp 3/18/2019 2:27 PM Page 194

▶ Temperature control(Automatic)

The seat warmer starts to automatically control the seat temperature in order to prevent low-temperature burns after being manually turned ON.

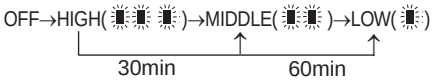

You may manually push the toggle switch up (front seat) or press the switch (rear seat) to increase the seat temperature. However, it soon returns to the automatic mode again.

- When pushing the toggle switch up (front seat) or pressing the switch (rear seat) for more than 1.5 seconds with the seat warmer operating, the seat warmer will turn OFF.
- The seat warmer defaults to the OFF position whenever the Engine Start/Stop button is in the ON position.

✻ NOTICE

With the seat warmer switch in the ON position, the heating system in the seat turns off or on automatically depending on the seat temperature.

⚠ CAUTION

- ***When cleaning the seats, do not use an organic solvent such as paint thinner, benzene, alcohol and gasoline. Doing so may damage the surface of the heater or seats.***
- ***To prevent overheating the seat warmer, do not place anything on the seats that insulates against heat, such as blankets, cushions or seat covers while the seat warmer is in operation.***
- ***Do not place heavy or sharp objects on seats equipped with seat warmers. Damage to the seat warming components could occur.***
- ***Do not change the seat cover. It may damage the seat warmer or airventilation system.***

⚠ WARNING - Seat warmer burns

Passengers should use extreme caution when using seat warmers due to the possibility of excess heating or burns. The seat warmer may cause burns even at low temperatures, especially if used for long periods of time. In particular, the driver must exercise extreme care for the following types of passengers:

1. **Infants, children, elderly or handicapped persons, or hospital outpatients**
2. **Persons with sensitive skin or those that burn easily**
3. **Fatigued individuals**
4. **Intoxicated individuals**
5. **Individuals taking medication that can cause drowsiness or sleepiness (sleeping pills, cold tablets, etc.)**

ON ENG 4.qxp 3/18/2019 2:27 PM Page 195

Seat cooler (Air ventilation seat) (if equipped)

■ Front seat

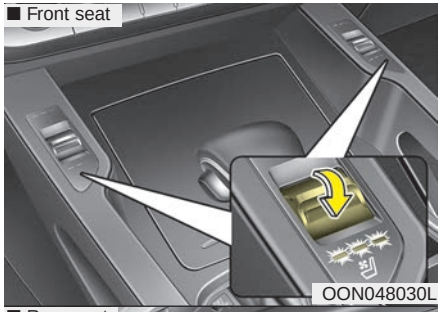

OON048030L

■ Rear seat

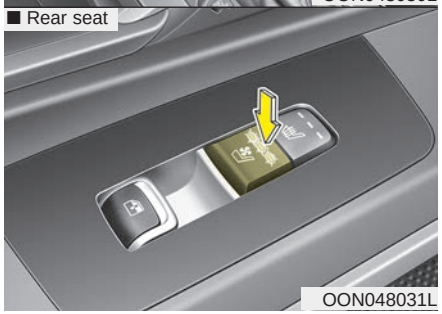

OON048031L

The temperature setting of the seat changes according to the switch position.

- If you want to warm your seat cushion, push the toggle switch up (front seat) or press the switch (rear seat).
- If you want to cool your seat cushion, push the toggle switch down (front seat) or press the switch (rear seat).
- Each time you push the toggle switch down (front seat) or press the switch (rear seat), the airflow will change as follows:

OFF→HIGH( )→MIDDLE( )→LOW( )

- The seat warmer (with air ventilation) defaults to the OFF position whenever the Engine Start/Stop button is turned on.

⚠ CAUTION

When cleaning the seats, do not use an organic solvent such as paint thinner, benzene, alcohol and gasoline. Doing so may damage the surface of the heater or seats.

ON ENG 4.qxp 3/18/2019 2:27 PM Page 196

Power outlet

■ Front

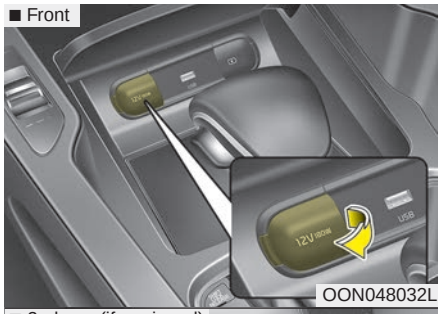

OON048032L

■ 2nd row (if equipped)

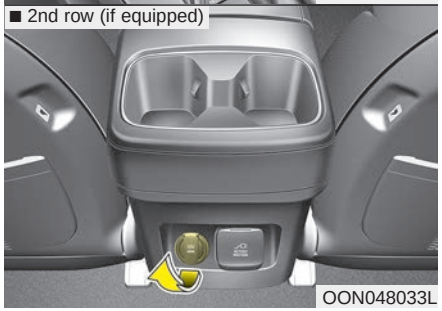

OON048033L

■ Rear

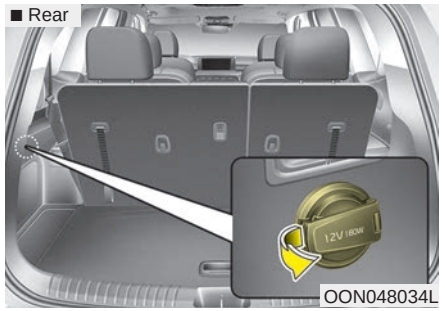

OON048034L

The power outlet is designed to provide power for cellular telephones or other devices designed to operate with vehicle electrical systems. The devices should draw less than 10 amps with the engine running.

⚠ CAUTION

- ***Use the power outlet only when the engine is running and remove the accessory plug after use. Using the accessory plug for prolonged periods of time with the engine off could cause the battery to discharge.***
- ***Only use 12V electric accessories which are less than 10A in electric capacity.***
- ***Adjust the air-conditioner or heater to the lowest operating level when using the power outlet.***
- ***Close the cover when not in use.***
- ***Some electronic devices can cause electronic interference when plugged into a vehicle's power outlet. These devices may cause excessive audio static and malfunctions in other electronic systems or devices used in your vehicle.***

(Continued)

ON ENG 4.qxp 3/18/2019 2:27 PM Page 197

(Continued)

- *Refrain from using the heater or A/C if you need to use the multipurpose socket. If the heater or A/C has to be used simultaneously, have it to the lowest setting.*
- *Some add-on electrical equipment will induce electromagnetic interference. This will lead to subsequent malfunction or hinder good reception of the Audio/Video and electrical system.*
- *Always make sure that electric add-ons are fully plugged into the multipurpose sockets. Insecure contacts may lead to electrical malfunctions.*
- *Do not use any electrical device that requires more than the designated power consumption. The power outlet and electrical wiring may heat up resulting in electrical malfunctions.*

(Continued)

(Continued)

- *Always make sure that electric add -ons are fully plugged into the multipurpose sockets. Insecure contacts may lead to electrical malfunctions.*
- *Use plug in battery equipped electrical devices with reverse current protection. The current from the battery may flow into the vehicle's electronic system and cause system malfunction.*

⚠ WARNING

Do not put a finger or a foreign element (pin, etc.) into a power outlet and do not touch with a wet hand. You may get an electric shock.

ON ENG 4.qxp 3/18/2019 2:28 PM Page 198

USB charger

■ Front

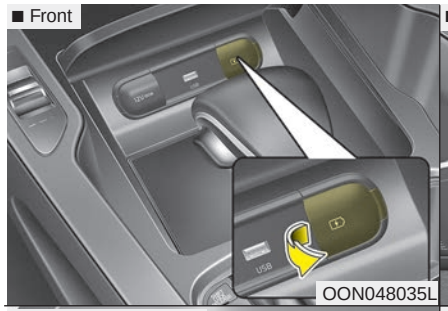

OON048035L

■ 2nd row

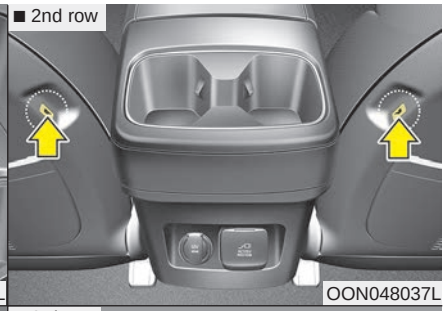

OON048037L

■ Center (if equipped)

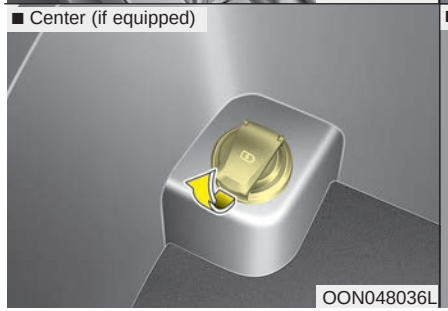

OON048036L

■ 3rd row

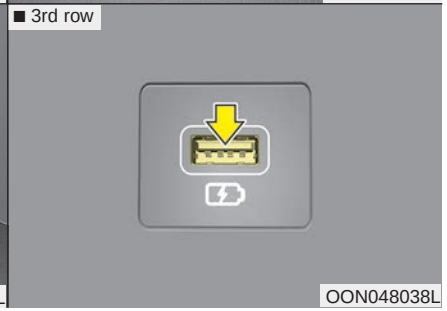

OON048038L

The USB charger is designed to recharge batteries of small size electrical devices using a USB cable. The electrical devices can be recharged when the Engine Start/Stop button is in ACC/ON/START position.

The battery charging state may be monitored on the electrical device.

Disconnect the USB cable from the USB port after use.

- Some devices are not supported for fast charging but will be charged with normal speed.
- Use the USB charger when the engine is running to prevent battery discharge.
- Only devices that fits the USB port can be used.
- The USB charger can be used only for battery charging purposes.
- Battery chargers cannot be charged.

ON ENG 4.qxp 3/18/2019 2:28 PM Page 199

AC inverter (if equipped)

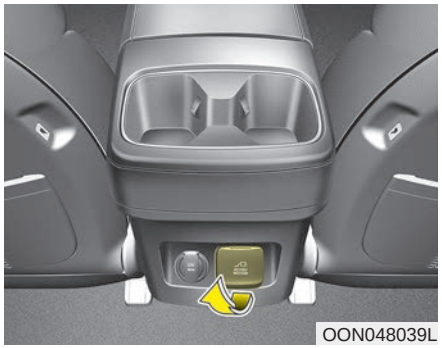
OON048039L

The AC inverter supplies 115V/150W electric power to operate electric accessories or equipment.

If you wish to use the AC inverter, open up the AC inverter cover and connect a plug to it. The AC inverter supplies electric power when vehicle is on.

✻ NOTICE

- **Rated voltage : AC 115V**
- **Maximum electric power : 150W**
- **In order to avoid an electrical system failure, electric shock, etc., be sure to read owner's manual before use.**
- **Be sure to close the cover except for when in use.**

- To prevent the battery from being discharged, do not use the AC inverter while the vehicle is not on.
- After using an electric accessory or equipment, pull the plug out. Leaving the accessory or equipment plugged in for a long time may cause battery discharge.
- Do not use an electric accessory or equipment the power consumption of which is greater than 150W (115V).
- When the AC inverter input voltage is less than 11.3V, automatically turn off the power.

  AC inverter will operate as normal when the voltage is increased.
- When the AC inverter input voltage is less than 10.7V, power will turn off. The AC inverter will operate as normal when the voltage is increased.
- While the power consumption of some electrical devices/appliances may be within the AC inverter's electric power range, it may malfunction in below cases.

ON ENG 4.qxp 3/18/2019 2:28 PM Page 200

- If the device/appliance requires high electric power for initial start up
- If the device/appliance processes precise/very accurate data
- If the device/appliance requires very stable supply of electricity

⚠ CAUTION - Electric accessory devices

- ***Do not use broken electric accessories which may damage the AC inverter and electrical systems of the vehicle.***
- ***Do not use two or more electric accessories at the same time. It may cause damage to the electrical systems of the vehicle.***

Wireless smart phone charging system (if equipped)

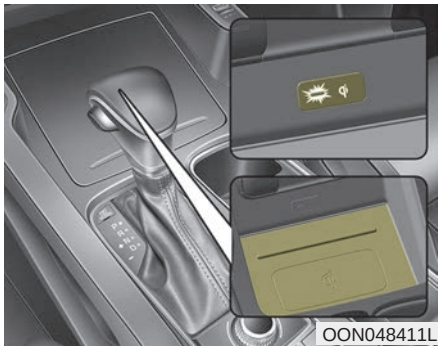

A wireless smart phone charging system located in front of the center console.

Firmly close all doors, and turn the Engine Start/Stop button to ACC or IGN ON. To start wireless charging, place the smart phone equipped with wireless charging function on the wireless charging pad.

For best wireless charging results, place the smart phone on the center of the charging pad.

The wireless charging system is designed for one smart phone equipped with QI per single usage only. Please refer to the smart phone accessory cover or the smart phone manufacturer homepage to check whether your smart phone supports QI function.

⚠ WARNING

If any metallic object such as coins is located between the wireless charging system and the smart phone, the charging may be disrupted. Also, the metallic object may heat up.

ON ENG 4.qxp 3/18/2019 2:28 PM Page 201

Wireless smart phone charging

1. Remove any object on the smart phone charging pad including the smart key. If there is any foreign object on the pad other than a smart phone, the wireless charging function may not operate properly.
2. Place the smart phone on the center of the wireless charging pad.
3. The indicator light will change to orange once the wireless charging begins. After the charging is complete, the orange light will change to green.
4. You can choose to turn the wireless charging function to either ON or OFF by selecting the USM on the instrument cluster. (Please refer to “Instrument Cluster” for details).

If the wireless charging does not work, gently move your smart phone around the pad until the charging indicator light turns yellow. Depending on the smart phone, the charging indicator light may not turn green even after the charging is complete.

If the wireless charging is not functioning properly, the orange light will blink and flash for ten seconds then turn off. In such cases, remove the smart phone from the pad and replace it on the pad again, or double check the charging status.

If you leave the smart phone on the charging pad when the Engine Start/Stop button is in OFF, the vehicle will alert you through warning messages and sound (applicable for vehicles with voice guidance function) after the ‘Good bye’ function on the instrument cluster ends.

For some manufacturers' smart phones, the system may not warn you even though the smart phone is left on the wireless charging unit. This is due to the particular characteristic of the smart phone and not a malfunction of the wireless charging.

⚠ CAUTION

- ***Securely close the tray cover when using the wireless smart phone charge function. Otherwise, some liquid held by the cup holder may flow onto the wireless charging pad during sudden stops.***
- ***Close the tray cover when the smart phone is placed in it at all times. If the vehicle is in motion without the tray cover closed, it is more likely that the driver may use the smart phone. The use of smart phones while driving may lead to possible injuries and accidents.***
- ***If it is not possible to close the tray cover due to the size of the smart phone, do not use the wireless smart phone charging function at all.***

(Continued)

ON ENG 4.qxp 3/18/2019 2:28 PM Page 202

(Continued)

- *When the tray cover is broken, do not use the wireless charging function before the tray cover is repaired.*
- *When the interior temperature of the wireless charging system rises above a set temperature, the wireless charging will cease to function. After the interior temperature drops below the threshold, the wireless charging function will resume.*
- *If there is any metallic object between the smart phone and the wireless charging pad, immediately remove the smart phone. Remove the metallic object after it has completely cooled down.*
- *The wireless charging may not function properly when there is a heavy accessory cover on the smart phone.*

(Continued)

(Continued)

- *The wireless charging will stop when using the wireless smart key search function to prevent radio wave disruption.*
- *The wireless charging will stop when the smart key is moved out of the vehicle with the Engine Start/Stop button in ON.*
- *The wireless charging will stop when any of the doors is opened (applicable for vehicles equipped with smart keys).*
- *The wireless charging will stop when the vehicle is turned OFF.*
- *The wireless charging will stop when the smart phone is not in complete contact with the wireless charging pad.*

(Continued)

(Continued)

- *Items equipped with magnetic components such as credit card, telephone card, bankbook, any transportation ticket and such may become damaged during wireless charging.*
- *Place the smart phone on the center of the charge pad for best results. The smart phone may not charge when placed near the rim of the charging pad. When the smart phone does get charged, it may heat up excessively.*
- *For smart phones without built-in wireless charging system, an appropriate accessory has to be equipped.*
- *Smart phones of some manufacturers may display messages on weak current. This is due to the particular characteristic of the smart phone and does not imply a malfunction on wireless charging function.*

(Continued)

ON ENG 4.qxp 3/18/2019 2:28 PM Page 203

(Continued)

- ***The indicator light of some manufacturers' smart phones may still be yellow after the smart phone is fully charged. This is due to the particular characteristic of the smart phone and not a malfunction of the wireless charging.***
- ***When any smart phone without a wireless charging function or a metallic object is placed on the charging pad, a small noise may sound. This small sound is due to the vehicle discerning compatibility of the object placed on the charging pad. It does not affect your vehicle or the smart phone in any way.***

Coat hook (if equipped)



❊ This actual feature may differ from the illustration.

To use the coat hook, pull down the upper portion of coat hook.

⚠ CAUTION

Do not hang heavy clothes, since those may damage the hook.

⚠ WARNING



Do not hang other objects such as hangers or hard objects except clothes. Also, do not put heavy, sharp or breakable objects in the clothe pockets. In an accident or when the curtain air bag is inflated, it may cause vehicle damage or personal injury.

ON ENG 4.qxp 3/18/2019 2:28 PM Page 204

Floor mat anchor(s) (if equipped)

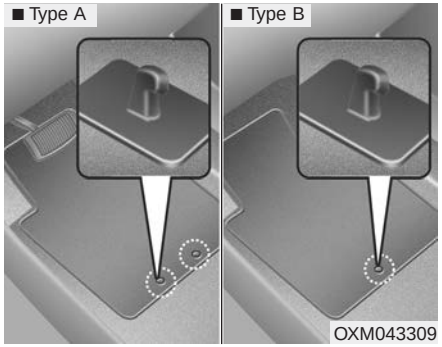

When using a floor mat on the front floor carpet, make sure it attaches to the floor mat anchor(s) in your vehicle. This keeps the floor mat from sliding forward.

⚠ WARNING

The following must be observed when installing ANY floor mat to the vehicle.

- **Ensure that the floor mats are securely attached to the vehicle's floor mat anchor(s) before driving the vehicle.**
- **Do not use ANY floor mat that cannot be firmly attached to the vehicle's floor mat anchors.**
- **Do not stack floor mats on top of one another (e.g. all-weather rubber mat on top of a carpeted floor mat). Only a single floor mat should be installed in each position.**

IMPORTANT - Your vehicle was manufactured with driver's side floor mat anchors that are designed to securely hold the floor mat in place. To avoid any interference with pedal operation, Kia recommends that the Kia floor mat designed for use in your vehicle be installed.

Side curtain (if equipped)

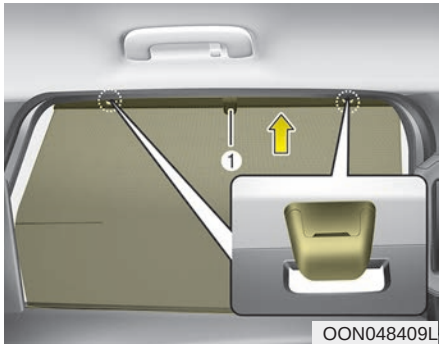

To use the side curtain:

1. Lift the curtain by the handle (1).
2. Hang the curtain on both sides of the hook If the hook is hung on one side, it may cause the wrinkles.

⚠ CAUTION

Do not hang any other object except the side curtain.

ON ENG 4.qxp 3/18/2019 2:28 PM Page 205

Luggage net holder

■ Type A



OON048067L

■ Type B

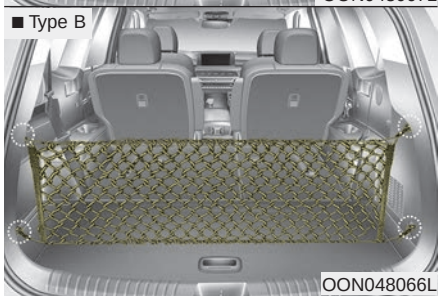

OON048066L

To keep items from shifting in the cargo area, you can use the holders located in the cargo area to attach the luggage net. If necessary, Kia recommends to contact an authorized Kia dealer/service partner to obtain a luggage net.

⚠ CAUTION

To prevent damage to the goods or the vehicle, care should be taken when carrying fragile or bulky objects in the luggage compartment.

⚠ WARNING

To avoid eye injury, DO NOT overstretch the luggage net. ALWAYS keep your face and body out of the luggage net's recoil path. DO NOT use the luggage net when the strap has visible signs of wear or damage.

ON ENG 4.qxp 3/18/2019 2:28 PM Page 206

EXTERIOR FEATURES

Roof rack (if equipped)

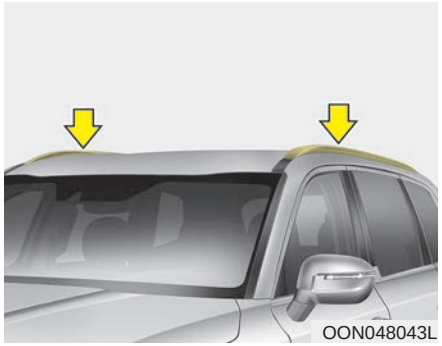

If the vehicle has a roof rack, you can load cargo on top of your vehicle.

Crossbars and fixing components needed to install the roof rack on your vehicle may be obtained from an authorized Kia dealer/service partner or other qualified shop.

✻ NOTICE

- **The crossbars (if equipped) should be placed in the proper load carrying positions prior to placing items onto the roof rack.**
- **If the vehicle is equipped with a sunroof, be sure not to position cargo onto the roof rack in such a way that it could interfere with sunroof operation.**
- **When the roof rack is not being used to carry cargo, the crossbars may need to be repositioned if wind noise is detected.**

⚠ CAUTION

- ***When carrying cargo on the roof rack, take the necessary precautions to make sure the cargo does not damage the roof of the vehicle.***
- ***When carrying large objects on the roof rack, make sure they do not exceed the overall roof length or width.***
- ***When you are carrying cargo on the roof rack, do not operate the sunroof (if equipped).***

ON ENG 4.qxp 3/18/2019 2:28 PM Page 207

⚠ WARNING

- **The following specification is the maximum weight that can be loaded onto the roof rack. Distribute the load as evenly as possible across the crossbars (if equipped) and roof rack and secure the load firmly.**

ROOF RACK	100 kg (220 lbs.) EVENLY DISTRIBUTED

Loading cargo or luggage in excess of the specified weight limit on the roof rack may damage your vehicle.

- **The vehicle center of gravity will be higher when items are loaded onto the roof rack. Avoid sudden starts, braking, sharp turns, abrupt maneuvers or high speeds that may result in loss of vehicle control or rollover resulting in an accident.**

(Continued)

(Continued)

- **Always drive slowly and turn corners carefully when carrying items on the roof rack. Severe wind updrafts, caused by passing vehicles or natural causes, can cause sudden upward pressure on items loaded on the roof rack. This is especially true when carrying large, flat items such as wood panels or mattresses. This could cause the items to fall off the roof rack and cause damage to your vehicle or others around you.**
- **To prevent damage or loss of cargo while driving, check frequently before or while driving to make sure the items on the roof rack are securely fastened.**

ON ENG 4.qxp 3/18/2019 2:28 PM Page 208

AUDIO SYSTEM

✻ NOTICE

If you install an after market HID head lamp, your vehicle's audio and electronic device may malfunction.

✻ If your vehicle is equipped with multimedia system, refer to a separately supplied manual for detailed information.

Antenna

Shark fin antenna

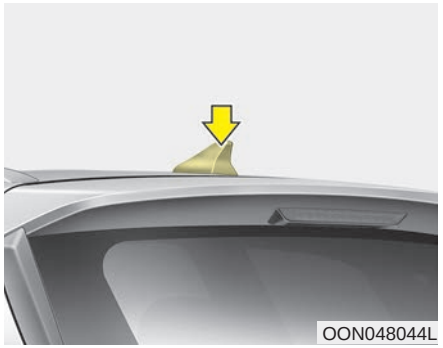

The shark fin antenna will receive both AM and FM signals and the transmit data.

USB port

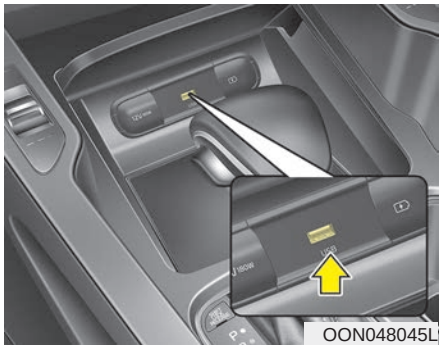

You can use an USB port to plug in an USB.

✻ NOTICE

When using a portable audio device connected to the power outlet, noise may occur during playback. If this happens, use the power source of the portable audio device.

ON ENG 4.qxp 3/18/2019 2:28 PM Page 209

How vehicle radio works

FM reception

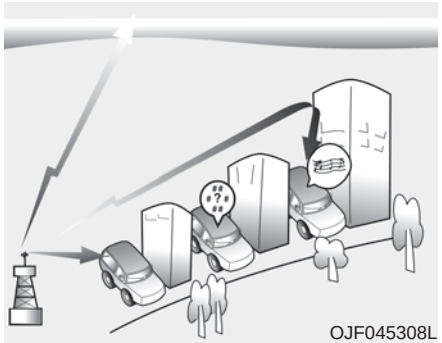

AM and FM radio signals are broadcast from transmitter towers located around your city. They are intercepted by the radio antenna on your vehicle. This signal is then received by the radio and sent to your vehicle speakers.

When a strong radio signal has reached your vehicle, the precise engineering of your audio system ensures the best possible quality reproduction. However, in some cases the signal coming to your vehicle may not be strong and clear.

This can be due to factors, such as the distance from the radio station, closeness of other strong radio stations or the presence of buildings, bridges or other large obstructions in the area.

AM (MW, LW) reception

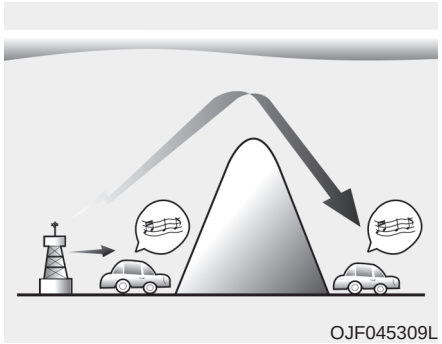

AM broadcasts can be received at greater distances than FM broadcasts. This is because AM radio waves are transmitted at low frequencies. These long, low frequency radio waves can follow the curvature of the earth rather than travelling straight out into the atmosphere. In addition, they curve around obstructions so that they can provide better signal coverage.

ON ENG 4.qxp 3/18/2019 2:28 PM Page 210

FM radio station

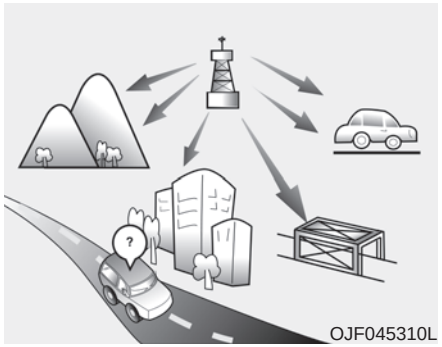

FM broadcasts are transmitted at high frequencies and do not bend to follow the earth's surface. Because of this, FM broadcasts generally begin to fade at short distances from the station. Also, FM signals are easily affected by buildings, mountains, or other obstructions. These can result in certain listening conditions which might lead you to believe a problem exists with your radio. The following conditions are normal and do not indicate radio trouble:

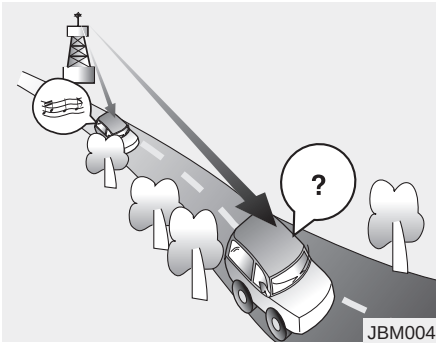

- Fading - As your vehicle moves away from the radio station, the signal will weaken and sound will begin to fade. When this occurs, we suggest that you select another stronger station.
- Flutter/Static - Weak FM signals or large obstructions between the transmitter and your radio can disturb the signal causing static or fluttering noises to occur. Reducing the treble level may lessen this effect until the disturbance clears.

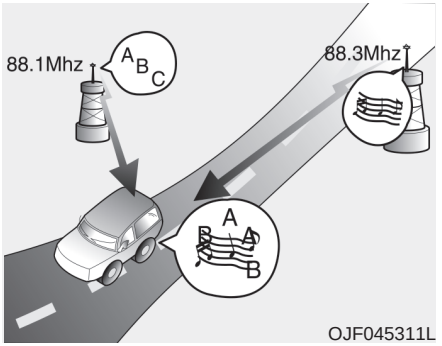

- Station Swapping - As a FM signal weakens, another more powerful signal near the same frequency may begin to play. This is because your radio is designed to lock onto the clearest signal. If this occurs, select another station with a stronger signal.
- Multi-Path Cancellation - Radio signals being received from several directions can cause distortion or fluttering. This can be caused by a direct and reflected signal from the same station, or by signals from two stations with close frequencies. If this occurs, select another station until the condition has passed.

ON ENG 4.qxp 3/18/2019 2:28 PM Page 211

Using a cellular phone or a two-way radio

When a cellular phone is used inside the vehicle, noise may be produced from the audio system. This does not mean that something is wrong with the audio equipment. In such a case, use the cellular phone at a place as far as possible from the audio equipment.

⚠ CAUTION

When using a communication system such as a cellular phone or a radio set inside the vehicle, a separate external antenna must be fitted. When a cellular phone or a radio set is used with an internal antenna alone, it may interfere with the vehicle's electrical system and adversely affect safe operation of the vehicle.

⚠ WARNING

Do not use a cellular phone while driving. Stop at a safe location to use a cellular phone.

ON ENG 5.qxp 3/18/2019 2:40 PM Page 1

Driving your vehicle

Before driving 5-5
- Before entering vehicle 5-5
- Necessary inspections 5-5
- Before starting 5-5

Engine start/stop button 5-7
- Illuminated engine start/stop button 5-7
- Engine start/stop button position. 5-7
- Starting the engine. 5-10

Automatic transmission 5-12
- Automatic transmission operation. 5-12
- Good driving practices 5-18

All Wheel Drive (AWD) 5-20
- Using All Wheel Drive (AWD) 5-20
- All wheel drive (AWD/Terrain mode) 5-21
- For safe all wheel drive operation 5-23
- Reducing the risk of a rollover 5-27

Brake system. 5-30
- Power brakes 5-30
- Parking brake - Foot type 5-32
- Electronic parking brake (EPB) 5-34
- Auto hold 5-40
- Anti-lock Brake System (ABS). 5-44
- Electronic Stability Control (ESC) 5-47
- Vehicle Stability Management (VSM) 5-51
- Trailer Stability Assist (TSA) 5-52
- Hill-start Assist Control (HAC) 5-53
- Good braking practices. 5-54

Drive mode integrated control system (FWD) . . 5-56

Drive mode integrated control system (AWD) . . 5-61

Forward Collision-avoidance Assist (FCA) system - sensor fusion type (front radar + front camera). 5-66
- System setting and activation. 5-66
- FCA warning message and system control 5-68
- FCA sensor 5-71
- System malfunction 5-74
- Limitations of the system 5-76

Cruise Control system 5-82
- Cruise Control Switch. 5-83
- To set Cruise Control Speed. 5-83
- To increase Cruise Control set Speed 5-84
- To decrease the cruising speed 5-84
- To temporarily accelerate with the cruise control on 5-84
- To cancel cruise control 5-85
- To resume cruising speed at more than approximately 30 km/h (20 mph) 5-85
- To turn cruise control off 5-86

ON ENG 5.qxp 3/18/2019 2:40 PM Page 2

Smart Cruise Control with Stop & Go system . . 5-87
• To adjust the sensitivity of Smart Cruise Control . . 5-88
• To convert to Cruise Control mode 5-89
• Smart Cruise Control Switch 5-89
• Smart Cruise Control speed 5-90
• Smart Cruise Control vehicle-to-vehicle distance . . 5-95
• Sensor to detect distance to the vehicle ahead 5-98
• Limitations of the system 5-100
Leading vehicle departure alert 5-105
• System setting and operating conditions. 5-105
Lane Following Assist (LFA) system 5-107
• LFA operation 5-108
• Warning message. 5-109
• Limitations of the system 5-111
Lane Keeping Assist (LKA) system 5-114
• LKA operation 5-116
• Warning light and message. 5-118
• Driver's attention. 5-120
• LKA system function change 5-121
Driver Attention Warning (DAW) system 5-123
• System setting and activation. 5-123
• Resetting the system 5-125
• System standby 5-125
• System malfunction 5-126
Blind-spot collision warning/Blind-spot collision-avoidance assist 5-128
• System description. 5-128
• System setting and activation. 5-129
• Warning message and system control 5-131
• Limitations of the system 5-137
Rear Cross-traffic Collision Warning (RCCW) system/Rear Cross-traffic Collision-avoidance Assist (RCCA) system 5-141
• System description. 5-141
• System setting and activation. 5-142
• Warning message and system control 5-143
• Limitations of the system 5-148
Economical operation 5-152
Special driving conditions 5-154
• Hazardous driving conditions 5-154
• Reducing the risk of a rollover 5-154
• Rocking the vehicle 5-155
• Smooth cornering 5-156
• Driving at night 5-157
• Driving in the rain. 5-157
• Driving in flooded areas 5-158
• Driving off-road. 5-158
• Highway driving 5-158

ON ENG 5.qxp 3/18/2019 2:40 PM Page 3

Winter driving 5-160
- **Snowy or Icy conditions 5-160**
- **Use high quality ethylene glycol coolant 5-163**
- **Check battery and cables 5-163**
- **Change to "winter weight" oil if necessary 5-163**
- **Check spark plugs and ignition system. 5-163**
- **To keep locks from freezing 5-163**
- **Use approved window washer anti-freeze in system 5-163**
- **Don't let your parking brake freeze 5-164**
- **Don't let ice and snow accumulate underneath . . . 5-164**
- **Carry emergency equipmen 5-164**

Vehicle weight 5-165
- **Base curb weight 5-165**
- **Vehicle curb weight 5-165**
- **Cargo weight 5-165**
- **GAW (Gross Axle Weight) 5-165**
- **GAWR (Gross Axle Weight Rating) 5-165**
- **GVW (Gross Vehicle Weight). 5-165**
- **GVWR (Gross Vehicle Weight Rating) 5-165**
- **Overloading 5-165**

ON ENG 5.qxp 3/18/2019 2:40 PM Page 4

⚠ WARNING - ENGINE EXHAUST CAN BE DANGEROUS!

Engine exhaust fumes can be extremely dangerous. If, at any time, you smell exhaust fumes inside the vehicle, open the windows immediately.

- **Do not inhale exhaust fumes.**

  Exhaust fumes contain carbon monoxide, a colorless, odorless gas that can cause unconsciousness and death by asphyxiation.

- **Be sure the exhaust system does not leak.**

  The exhaust system should be checked whenever the vehicle is raised to change the oil or for any other purpose. If you hear a change in the sound of the exhaust or if you drive over something that strikes the underneath side of the vehicle, have the system checked by a professional workshop. Kia recommends to visit an authorized Kia dealer/service partner.

- **Do not run the engine in an enclosed area.**

  Letting the engine idle in your garage, even with the garage door open, is a hazardous practice. Never run the engine in your garage any longer than it takes to start the engine and back the vehicle out.

- **Avoid idling the engine for prolonged periods with people inside the vehicle.**

  If it is necessary to idle the engine for a prolonged period with people inside the vehicle, be sure to do so only in an open area with the air intake set at "Fresh" and fan operating at one of the higher speeds so fresh air is drawn into the interior.

If you must drive with the tailgate/trunk open because you are carrying objects that make this necessary:

1. Close all windows.
2. Open side vents.
3. Set the air intake control at "Fresh", the air flow control at "Floor" or "Face" and the fan at one of the higher speeds.

To ensure proper operation of the ventilation system, be sure the ventilation air intakes located just in front of the windshield are kept clear of snow, ice, leaves or other obstructions.

ON ENG 5.qxp 3/18/2019 2:40 PM Page 5

BEFORE DRIVING

Before entering vehicle

- Be sure that all windows, outside mirror(s), and outside lights are clean.
- Check the condition of the tires.
- Check under the vehicle for any sign of leaks.
- Be sure there are no obstacles behind you if you intend to back up.

Necessary inspections

Fluid levels, such as engine oil, engine coolant, brake fluid, and washer fluid should be checked on a regular basis, with the exact interval depending on the fluid. Further details are provided in chapter 7, “Maintenance”.

⚠ WARNING

Driving while distracted can result in a loss of vehicle control, that may lead to an accident, severe personal injury, and death. The driver’s primary responsibility is in the safe and legal operation of a vehicle, and use of any handheld devices, other equipment, or vehicle systems which take the driver’s eyes, attention and focus away from the safe operation of a vehicle or which are not permissible by law should never be used during operation of the vehicle.

Before starting

- Close and lock all doors.
- Position the seat so that all controls are easily reached.
- Adjust the inside and outside rearview mirrors.
- Be sure that all lights work.
- Check all gauges.
- Check the operation of warning lights when the engine start/stop button is turned to the ON position.
- Release the parking brake and make sure the brake warning light is not on.

For safe operation, be sure you are familiar with your vehicle and its equipment.

ON ENG 5.qxp 3/18/2019 2:40 PM Page 6

⚠ WARNING

All passengers must be properly belted whenever the vehicle is moving. Refer to "Seat belts" in chapter 3 for more information on their proper use.

⚠ WARNING

Always check the surrounding areas near your vehicle for people, especially children, before putting a vehicle into "D (Drive)" or "R (Reverse)".

⚠ WARNING - Driving under the influence of alcohol or drugs

Drinking and driving is dangerous. Drunk driving is the number one contributor to the highway death toll each year. Even a small amount of alcohol will affect your reflexes, perceptions and judgement. Driving while under the influence of drugs is as dangerous or more dangerous than driving drunk.

You are much more likely to have a serious accident if you drink or take drugs and drive.

If you are drinking or taking drugs, don't drive. Do not ride with a driver who has been drinking or taking drugs. Choose a designated driver or call a cab.

⚠ WARNING

- **When you intend to park or stop the vehicle with the engine on, be careful not to press the accelerator pedal for a long period of time. It may overheat the engine or exhaust system and cause fire.**
- **When you make a sudden stop or turn the steering wheel rapidly, loose objects may drop on the floor and it could interfere with the operation of the foot pedals, possibly causing an accident. Keep all things in the vehicle safely stored.**
- **If you do not focus on driving, it may cause an accident. Adjust audio and temperature controls prior to driving the vehicle to limit distractions. It is the responsibility of the driver to always drive safely.**

ON ENG 5.qxp 3/18/2019 2:40 PM Page 7

ENGINE START/STOP BUTTON

Illuminated engine start/stop button

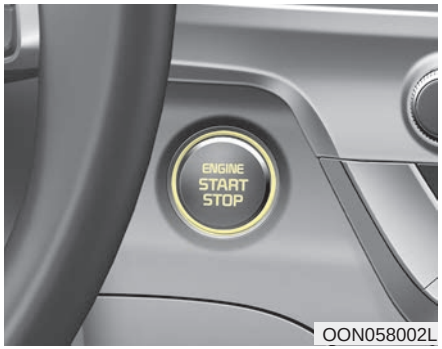

OON058002L

Whenever the front door is opened, the engine start/stop button will illuminate for your convenience. The light will go off after about 30 seconds when the door is closed. It will also go off immediately when the engine start/stop button is ON position.

Engine start/stop button position

OFF

To turn off the engine (START/RUN position) or vehicle power (ON position), press the engine start/stop button with the shift lever in the P (Park) position. When you press the engine start/stop button without the shift lever in the P (Park) position, the engine start/stop button will not change to the OFF position but to the ACC position.

The steering wheel locks when the engine start/stop button is in the OFF position to protect you against theft. It locks when the door is opened.

If the steering wheel is not locked properly when you open the driver's door, the warning chime will sound. Try locking the steering wheel again. If the problem is not solved, have the system checked by a professional workshop. Kia recommends to visit an authorized Kia dealer/service partner.

In addition, if the engine start/stop button is in the OFF position after the driver's door is opened, the steering wheel will not lock and the warning chime will sound. In such a situation, close the door. Then the steering wheel will lock and the warning chime will stop.

ON ENG 5.qxp 3/18/2019 2:40 PM Page 8

✻ NOTICE

If the steering wheel doesn't unlock properly, the engine start/stop button will not work. Press the engine start/stop button while turning the steering wheel right and left to release the tension.

⚠ CAUTION

You are able to turn off the engine (START/RUN) or vehicle power (ON), only when the vehicle is not in motion. In an emergency situation while the vehicle is in motion, you are able to turn the engine off and to the ACC position by pressing the engine start/stop button for more than 2 seconds or 3 times repeatedly within 3 seconds. If the vehicle is still moving, you can restart the engine without engaging the brake pedal by pressing the engine start/stop button with the shift lever in the N (Neutral) position.

ACC(Accessory)

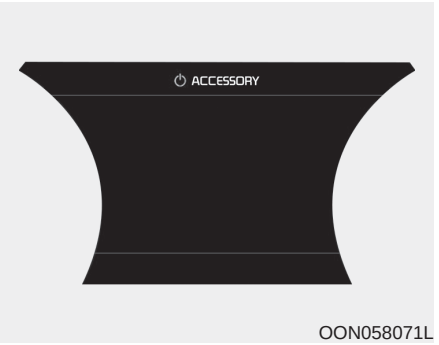

OON058071L

Press the engine start/stop button while it is in the OFF position without engaging the brake pedal.

The steering wheel unlocks (if equipped with anti-theft steering column lock) and electrical accessories are operational.

During this period the warning lights can be checked before the engine is started.

Accessory is displayed on the LCD of the cluster.

✻ NOTICE

If the engine start/stop button is in the ACC position for more than 1 hour, the button is turned off automatically to prevent battery discharge.

ON

Press the engine start/stop button while it is in the ACC position without depressing the brake pedal.

The warning lights can be checked before the engine is started. Do not leave the engine start/stop button in the ON position for a long time. The battery may discharge, because the engine is not running.

ON ENG 5.qxp 3/18/2019 2:40 PM Page 9

START/RUN

To start the engine, press the brake pedal and push the engine start/stop button with the shift lever in the P (Park) or the N (Neutral) position. For your safety, start the engine with the shift lever in the P (Park) position.

✻ NOTICE

If you press the engine start/stop button without pressing the brake pedal for automatic transmission vehicles, the engine will not start and the engine start/stop button changes as follow:
OFF ➔ACC ➔ ON ➔ OFF or ACC

✻ NOTICE

If you leave the engine start/stop button in the ACC or ON position for a long time, the battery will discharge.

⚠ WARNING

- **Never press the engine start/stop button while the vehicle is in motion. This would result in loss of directional control and braking function, which could cause an accident.**
- **The anti-theft steering column lock (if equipped) is not a substitute for the parking brake. Before leaving the driver's seat, always make sure the shift lever is engaged in P (Park), set the parking brake fully and shut the engine off. Unexpected and sudden vehicle movement may occur if these precautions are not taken.**

(Continued)

(Continued)

- **Never reach for the engine start/ stop button or any other controls through the steering wheel while the vehicle is in motion. The presence of your hand or arm in the area could cause loss of vehicle control, an accident and serious bodily injury or death.**
- **Do not place any movable objects around the driver's seat as they may move while driving, interfere with the driver and lead to an accident.**

ON ENG 5.qxp 3/18/2019 2:40 PM Page 10

Starting the engine

⚠ WARNING

- **Always wear appropriate shoes when operating your vehicle. Unsuitable shoes (high heels, ski boots,etc.) may interfere with your ability to use the brake, and accelerator pedal.**
- **Do not start the vehicle with the accelerator pedal engaged. The vehicle can move and lead to an accident.**
- **Wait until the engine rpm is normal. The vehicle may suddenly move if the brake pedal is released when the rpm is high.**

Starting the gasoline engine

1. Make sure the smart key is located inside the vehicle and close the driver seat. The vehicle may not start if it is not located near the driver seat.
2. Make sure the parking brake is applied.
3. **Automatic transmission** - Place the transmission shift lever in P (Park). Press the brake pedal fully.

   You can also start the engine when the shift lever is in the N (Neutral) position.
4. Press the engine start/stop button. Make sure that the accelerator pedal is not pressed.
5. Do not wait for the engine to warm up while the vehicle remains stationary.

   Start driving at moderate engine speeds. (Steep accelerating and decelerating should be avoided.)

- At the time that the vehicle doors are opened or when the engine start/stop button is pressed the vehicle will check for the smart key. If the smart key is not in the vehicle, a message “Key is not in the vehicle” will appear on the LCD display. And if all doors are closed, the chime will sound for 5 seconds. The indicator or warning will turn off while the vehicle is moving. Always have the smart key with you.

ON ENG 5.qxp 3/18/2019 2:40 PM Page 11

⚠ WARNING

The engine will start, only when the smart key is in the vehicle.

Never allow children or any person who is unfamiliar with the vehicle touch the engine start/stop button or related parts.

⚠ CAUTION

If the engine stalls while the vehicle is in motion, do not attempt to move the shift lever to the P (Park) position. If the traffic and road conditions permit, you may put the shift lever in the N (Neutral) position while the vehicle is still moving and press the engine start/stop button in an attempt to restart the engine.



OON058004L

✻ NOTICE

- **If the battery is weak or the smart key does not work correctly, you can start the engine by pressing the engine start/stop button with the smart key.**
  When you press the engine start/stop button directly with the smart key, the smart key should contact the button at a right angle.
  (Continued)

(Continued)

- **When the stop lamp fuse is blown, you cannot start the engine normally.**
  Replace the fuse with a new one. If it is not possible, you can start the engine by pressing the engine start/stop button for 10 seconds while it is in the ACC position. The engine can start without pressing the brake pedal. But for your safety always press the brake pedal before starting the engine.

⚠ CAUTION

Do not press the engine start/stop button for more than 10 seconds except when the stop lamp fuse is blown.

ON ENG 5.qxp 3/18/2019 2:40 PM Page 12

AUTOMATIC TRANSMISSION

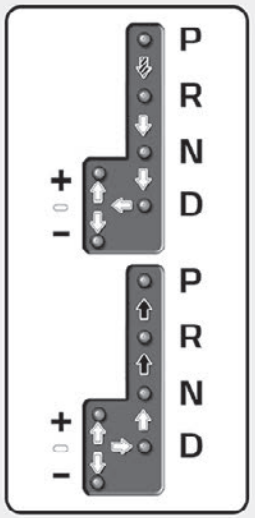

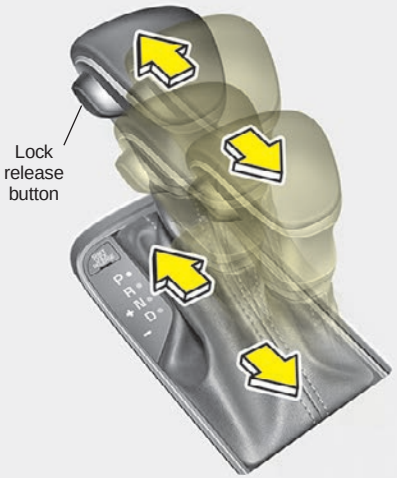

Press the brake pedal and the lock release button when shifting.

Press the lock release button when shifting.

The shift lever can be shifted freely.

OON058005L

Automatic transmission operation

The automatic transmission has 8 forward speeds and one reverse speed. The individual speeds are selected automatically, depending on the position of the shift lever.

✻ NOTICE

The first few shifts on a new vehicle, if the battery has been disconnected, may be somewhat abrupt. This is a normal condition, and the shifting sequence will adjust after shifts are cycled a few times by the TCM (Transmission Control Module) or PCM (Powertrain Control Module).

ON ENG 5.qxp 3/18/2019 2:40 PM Page 13

For smooth operation, press the brake pedal when shifting from N (Neutral) to a forward or reverse gear.

⚠ WARNING - Automatic transmission

- **Always check the surrounding areas near your vehicle for people, especially children, before shifting a vehicle into D (Drive) or R (Reverse).**
- **Before leaving the driver's seat, always make sure the shift lever is in the P (Park) position; then set the parking brake fully and shut the engine off. Unexpected and sudden vehicle movement can occur if these precautions are not followed in the order identified.**
- **Do not use the engine brake (shifting from a high gear to lower gear) rapidly on slippery roads.**

  The vehicle may slip causing an accident.

⚠ CAUTION

- ***To avoid damage to your transmission, do not accelerate the engine in R (Reverse) or any forward gear position with the brakes on.***
- ***When stopped on an upgrade, do not hold the vehicle stationary with engine power. Use the service brake or the parking brake.***
- ***Do not shift from N (Neutral) or P (Park) into D (Drive), or R (Reverse) when the engine is above idle speed.***

Transmission ranges

The indicator lights in the instrument cluster displays the shift lever position when the engine start/stop button is in the ON position.

P (Park)

Always come to a complete stop before shifting into P (Park). This position locks the transmission and prevents the front wheels from rotating.

ON ENG 5.qxp 3/18/2019 2:40 PM Page 14

⚠ WARNING

- **Shifting into P (Park) while the vehicle is in motion will cause the drive wheels to lock which will cause you to lose control of the vehicle and possibly damage the transmission.**
- **Do not use the P (Park) position in place of the parking brake. Always make sure the shift lever is latched in the P (Park) position and set the parking brake fully.**
- **Never leave a child unattended in a vehicle.**

R (Reverse)

Use this position to drive the vehicle backward.

⚠ CAUTION

Always come to a complete stop before shifting into or out of R (Reverse); you may damage the transmission if you shift into R (Reverse) while the vehicle is in motion, except as explained in "Rocking the vehicle", in this manual.

N (Neutral)

The wheels and transmission are not engaged. The vehicle will roll freely even on the slightest incline unless the parking brake or service brakes are applied.

⚠ WARNING

Do not drive with the shift lever in N (Neutral).

The engine brake will not work and lead to an accident.

ON ENG 5.qxp 3/18/2019 2:40 PM Page 15

- Parking in N (Neutral) gear

Follow below steps when parking and you want the vehicle to move when pushed.

1. After parking your vehicle, press the brake pedal and move the shift lever to [P] with the engine start/stop button in [ON] or while the engine is running.
2. If the parking brake is applied unlock the parking brake.
   - For EPB (Electronic Parking Brake) equipped vehicles, push the brake pedal with the engine start/stop button in [ON] or while the engine is running to disengage the parking brake. If [AUTO HOLD] function is used while driving (If [AUTO HOLD] indicator is on in the cluster), press [AUTO HOLD] switch and [AUTO HOLD] function should be turn off.
3. While pressing the brake pedal, turn the engine start/stop button [OFF].
   - For smart key equipped vehicles, the Engine Start/Stop button can be moved to [OFF] only when the shift lever is in [P].
4. Change the gear shift lever to [N] (Neutral) while pressing the brake pedal and pressing down a tool (e.g. flathead screw-driver) into the [SHIFT LOCK RELEASE] access hole at the same time. Then, the vehicle will move when external force is applied.

⚠ CAUTION

- ***With the exception of parking in neutral gear, always park the vehicle in [P] (Park) for safety and engage the parking brake.***
- ***Before parking in [N] (Neutral) gear, first make sure the parking ground is level and flat. Do not park in [N] gear on any slopes or gradients.***

  If parked and left in [N], the vehicle may move and cause serious damage and injury.
- ***After the Engine Start/Stop button has been turned off, the electronic parking brake cannot be disengaged.***
- ***For EPB (Electronic Parking Brake) equipped vehicles with [AUTO HOLD] function used while driving, if the Engine Start/Stop button has been turned [OFF], the electronic parking brake will be engaged automatically. Therefore, [AUTO HOLD] function should be turned off before the Engine Start/Stop button is turned off.***

ON ENG 5.qxp 3/18/2019 2:40 PM Page 16

D (Drive)

This is the normal forward driving position. The transmission will automatically shift through a 8-gear sequence, providing the best fuel economy and power.

✻ NOTICE

Always come to a complete stop before shifting into D (Drive).

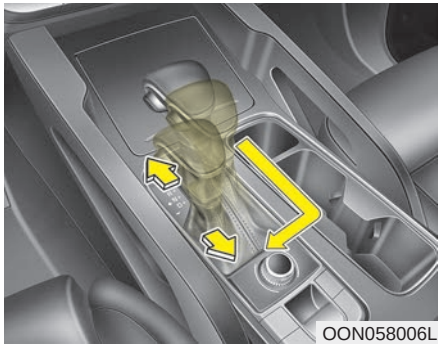

Manual mode

Whether the vehicle is stationary or in motion, manual mode is selected by pushing the shift lever from the D (Drive) position into the manual gate. To return to D (Drive) range operation, push the shift lever back into the main gate.

In manual mode, moving the shift lever backwards and forwards will allow you to make gearshifts rapidly.

Up (+) : Push the lever forward once to shift up one gear.

Down (-) : Pull the lever backwards once to shift down one gear.

✻ NOTICE

- **In manual mode, the driver must execute upshifts in accordance with road conditions, taking care to keep the engine speed below the red zone.**
- **In manual mode, only the 8 forward gears can be selected. To reverse or park the vehicle, move the shift lever to the R (Reverse) or P (Park) position as required.**
- **In manual mode, downshifts are made automatically when the vehicle slows down. When the vehicle stops, 1st gear is automatically selected.**
- **In manual mode, when the engine rpm approaches the red zone shift points are varied to upshift automatically.**
- **To maintain the required levels of vehicle performance and safety, the system may not execute certain gearshifts when the shift lever is operated.**

(Continued)

ON ENG 5.qxp 3/18/2019 2:41 PM Page 17

(Continued)

- **When driving on a slippery road, push the shift lever forward into the +(up) position. This causes the transmission to shift into the 2nd gear which is better for smooth driving on a slippery road. Push the shift lever to the -(down) side to shift back to the 1st gear.**

Shift lock system

For your safety, the automatic transmission has a shift lock system which prevents shifting the transmission from P (Park) into R (Reverse) unless the brake pedal is engaged.

To shift the transmission from P (Park) into R (Reverse):

1. Press and hold the brake pedal.
2. Start the engine or place the engine start/stop button in the ON position.
3. Move the shift lever.

If the brake pedal is repeatedly engaged and released with the shift lever in the P (Park) position, a chattering noise near the shift lever may be heard. This is a normal condition.

⚠ WARNING

Always fully depress the brake pedal before and while shifting out of the P (Park) position into another position to avoid inadvertent motion of the vehicle which could injure persons in or around the vehicle.

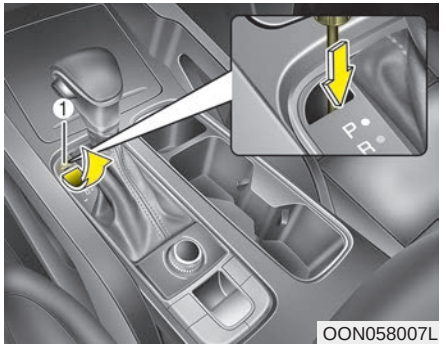

OON058007L

Shift-lock override

If the shift lever cannot be moved from the P (Park) position into R (Reverse) position with the brake pedal engaged, continue engaging the brake, then do the following:

ON ENG 5.qxp 3/18/2019 2:41 PM Page 18

1. Carefully remove the cap (1) covering the shift-lock override access hole.
2. Insert a screwdriver into the access hole and press down on the screwdriver.
3. Move the shift lever.
4. Have the system inspected by a professional workshop. Kia recommends to visit an authorized Kia dealer/service partner.

Good driving practices

- Never move the shift lever from P (Park) or N (Neutral) to any other position with the accelerator pedal engaged.
- Never move the shift lever into P (Park) when the vehicle is in motion.
- Be sure the vehicle is completely stopped before you attempt to shift into R (Reverse) or D (Drive).
- Never take the vehicle out of gear and coast down a hill. This may be extremely hazardous. Always leave the vehicle in gear when moving.
- Do not "ride" the brakes. This can cause them to overheat and malfunction. Instead, when you are driving down a long hill, slow down and shift to a lower gear. When you do this, engine braking will help slow down the vehicle.
- Slow down before shifting to a lower gear. Otherwise, the lower gear may not be engaged.
- Always use the parking brake. Do not depend on placing the transmission in P (Park) to keep the vehicle from moving.
- Exercise extreme caution when driving on a slippery surface. Be especially careful when braking, accelerating or shifting gears. On a slippery surface, an abrupt change in vehicle speed can cause the drive wheels to lose traction and the vehicle to go out of control.
- Optimum vehicle performance and economy is obtained by smoothly pressing and releasing the accelerator pedal.

ON ENG 5.qxp 3/18/2019 2:41 PM Page 19

⚠ WARNING

- **Always buckle-up! In a collision, an unbelted occupant is significantly more likely to be seriously injured or killed than a properly belted occupant.**
- **Avoid high speeds when cornering or turning.**
- **Do not make quick steering wheel movements, such as sharp lane changes or fast, sharp turns.**
- **The risk of rollover is greatly increased if you lose control of your vehicle at highway speeds.**
- **Loss of control often occurs if two or more wheels drop off the roadway and the driver oversteers to reenter the roadway.**
- **In the event your vehicle leaves the roadway, do not steer sharply. Instead, slow down before pulling back into the travel lanes.**
- **Never exceed posted speed limits.**

⚠ WARNING

If your vehicle becomes stuck in snow, mud, sand, etc., then you may attempt to rock the vehicle free by moving it forward and backward. Do not attempt this procedure if people or objects are anywhere near the vehicle. During the rocking operation the vehicle may suddenly move forward of backward as it becomes unstuck, causing injury or damage to nearby people or objects.

Moving up a steep grade from a standing start

To move up a steep grade from a standing start, press the brake pedal, shift the shift lever to D (Drive). Select the appropriate gear depending on load weight and steepness of the grade, and release the parking brake. Press the accelerator gradually while releasing the service brakes.

When accelerating from a stop on a steep hill, the vehicle may have a tendency to roll backwards.

⚠ WARNING

When you start driving after the car was stopped on a hill, even though the shift lever is in D (Driving) position, if you do not step on the accelerator pedal or brake pedal, the car may roll backward, resulting in a fatal accident.

Always come to a complete stop before shifting into D (Drive).

ON ENG 5.qxp 3/18/2019 3:30 PM Page 20

ALL WHEEL DRIVE (AWD) (IF EQUIPPED)

Using All Wheel Drive (AWD)

The All Wheel Drive (AWD) System delivers engine power to front and rear wheels for maximum traction. AWD is useful when extra traction is required, such as when driving slippery, muddy, wet, or snow-covered roads.

If the system determines there is a need for four wheel drive, the engine's driving power is distributed to all four wheels automatically.

⚠ WARNING

If the AWD warning light ( ) stays on the instrument cluster, your vehicle may have a malfunction with the AWD system. When the AWD warning light ( ) illuminates, have your vehicle checked by a professional workshop. Kia recommends to visit an authorized Kia dealer/service partner.

⚠ WARNING

To reduce the risk of SERIOUS INJURY or DEATH:

- **Do not drive in conditions that exceed the vehicles intended design such as challenging off-road conditions.**

(Continued)

(Continued)

- **Avoid high speeds when cornering or turning.**
- **Do not make quick steering wheel movements, such as sharp lane changes or fast, sharp turns.**
- **The risk of a rollover is greatly increased if you lose control of your vehicle at highway speeds.**
- **Loss of control often occurs if two or more wheels drop off the roadway and the driver over steers to reenter the roadway.**
- **In the event your vehicle leaves the roadway, do not steer sharply. Instead, slow down before pulling back into the travel lanes.**

ON ENG 5.qxp 3/18/2019 2:41 PM Page 21

ALL WHEEL DRIVE (AWD/TERRAIN MODE)

ALL WHEEL DRIVE helps the vehicle to maintain its best driving performance by controlling 4 wheels, engine, transmission and braking according to road conditions such as snow, mud, sand, etc.

Advantages of ALL WHEEL DRIVE

- Enhance safety when driving straight
- Improve performance when cornering
- Ensure operability in tough driving conditions such as snow, rain, sand, etc.

Switching from/to TERRAIN MODE

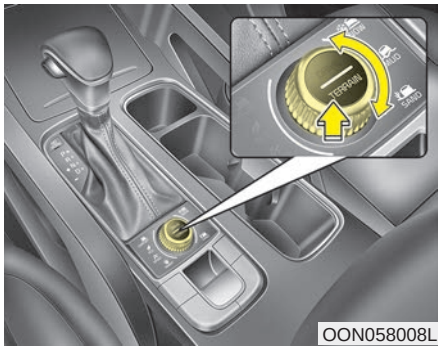

OON058008L

You can switch from DRIVE MODE to TERRAIN mode by pressing DRIVE/TERRAIN mode button and then select SNOW, MUD, or SAND mode within 4 seconds by turning TERRAIN MODE knob. If you press the DRIVE/TERRAIN mode button again, the vehicle will go back to last mode of DRIVE MODE.

✻ NOTICE

- **If you don't select the TERRAIN mode within 4 seconds after pressing DRIVE / TERRAIN mode button, it will go back to the last mode of DRIVE MODE.**
- **Even though you turned off the vehicle in TERRAIN mode, DRIVE mode will be set when you restart the vehicle.**

ON ENG 5.qxp 3/18/2019 2:41 PM Page 22

All Wheel Drive (AWD) transfer mode selection

Transfer mode	Selection mode	Description
AWD AUTO	-	• AWD AUTO is used when driving on roads in normal conditions, roads in urban areas, and on highways. • All wheels are in operation when a vehicle travels at a constant speed. Required tractions applying on front and rear wheels vary depending on road driving conditions and driving conditions, which will be automatically controlled by the computing system. • When the cluster's AWD display mode is selected, the cluster displays the status of how four wheels' traction forces are distributed.
SNOW		SNOW mode is used to appropriately distribute the vehicle's traction forces and prevent wheel slippage when driving on snowy or slippery road.
MUD		MUD mode is used to ensure safe driving by appropriately distributing the vehicle's traction forces when driving on muddy, unpaved or rough roads.
SAND		SAND mode is used to ensure safe driving by appropriately distributing the vehicle's traction forces when driving on sandy, graveled or unpaved off-roads.

❊ SNOW ↔ MUD ↔ SAND

⚠ CAUTION

Maintain AWD Auto mode when driving on roads in normal conditions. Driving in TERRAIN mode on normal roads may damage the AWD system and cause mechanical vibration or noise.

When driving (especially when cornering) under normal road conditions in TERRAIN mode, a driver may find minor mechanical vibration or noise, which is extremely normal phenomenon, not a malfunction. When TERRAIN mode is released, such noise or vibration will be immediately gone. When you turn off TERRAIN mode, it can lead to little shocks but this is a normal phenomenon that lasts until the traction forces on the front and rear wheels of the vehicle are released.

ON ENG 5.qxp 3/18/2019 2:41 PM Page 23

For safe all wheel drive operation

⚠ WARNING - All wheel drive

The conditions of on-road or off-road that demand all wheel drive mean all functions of your vehicle are exposed to extreme stress than under normal road conditions. Slow down and be ready for changes in the composition and traction of the surface under your tires. If you have any doubt about the safety of the conditions you are facing, stop and consider the best way to proceed. Do not exceed the ability of yourself or your vehicle to operate safely.

- Do not try to drive in deep standing water or mud since such conditions can stall your engine and clog your exhaust pipes. Do not drive down steep hills since it requires extreme skill to maintain control of the vehicle.

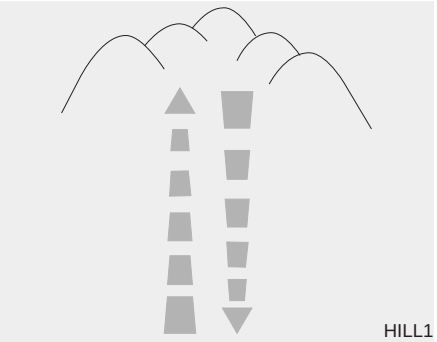

HILL1

- When you are driving up or down hills drive as straight as possible. Use extreme caution in going up or down steep hills, since you may flip your vehicle over depending on the grade, terrain and water/mud conditions.



HILL2

⚠ WARNING - Hills

Driving across the contour of steep hills can be extremely dangerous. This danger can come from slight changes in the wheel angle which can destabilize the vehicle or, even if the vehicle is maintaining stability under power, it can lose that stability if the vehicle stops its forward motion. Your vehicle may roll over without warning and without time for you to correct a mistake that could cause serious injury or death.

ON ENG 5.qxp 3/18/2019 2:41 PM Page 24

- You must consciously take the effort to learn how to corner in a AWD vehicle. Do not rely on your experience in conventional FWD vehicles in choosing safe cornering speed in AWD mode. For starters, you must drive more slowly in AWD.
- Drive carefully off-road because your vehicle may be damaged by rocks or roots of trees. Become familiar with the off-road conditions where you are going to drive before you begin driving.

⚠ WARNING - AWD

Reduce speed when you turn corners. The center of gravity of AWD vehicles is higher than that of conventional FWD vehicles, making them more likely to roll over when you turn corners too fast.



OON058009L

⚠ WARNING - Steering wheel

Do not grab the inside of the steering wheel when you are driving off-road. You may hurt your arm by a sudden steering maneuver or from steering wheel rebound due to impact with objects on the ground. You could lose control of the steering wheel.

- Always hold the steering wheel firmly when you are driving off-road.
- Make sure all passengers are wearing seat belts.

⚠ WARNING - Wind danger

If you are driving in heavy wind, the vehicle's higher center of gravity decreases your steering control capacity and requires you to drive more slowly.

⚠ WARNING - Driving through water

Drive slowly. If you are driving too fast in water, the water can get into the engine compartment and wet the ignition system, causing your vehicle to suddenly stop. If this happens and your vehicle is in a tilted position, your vehicle may roll over.

ON ENG 5.qxp 3/18/2019 2:41 PM Page 25

✻ NOTICE

- Do not drive in water if the level is higher than the bottom of the vehicle.
- Check your brake condition once you are out of mud or water. Press the brake pedal several times as you move slowly until you feel normal braking forces return.
- Shorten your scheduled maintenance interval if you drive in off-road conditions such as sand, mud or water (see "Maintenance under severe usage conditions" in section 7). Always wash your vehicle thoroughly after off-road use, especially cleaning the bottom of the vehicle.
- Since the driving torque is always applied to the 4 wheels the performance of the AWD vehicle is greatly affected by the condition of the tires. Be sure to equip the vehicle with four tires of the same size and type.
- A full time all wheel drive vehicle cannot be towed by an ordinary tow truck. Make sure that the vehicle is placed on a flat bed truck for moving.

⚠ WARNING - AWD driving

- Avoid high cornering speed.
- Do not make quick steering wheel movements, such as sharp lane changes or fast, sharp turns.
- The risk of rollover is greatly increased if you lose control of your vehicle at high speed.
- In a collision, an unbelted person is significantly more likely to die compared to a person wearing a seat belt.
- Loss of control often occurs if two or more wheels drop off the roadway and the driver over-steers to re-enter the roadway. In the event your vehicle leaves the roadway, do not steer sharply. Instead, slow down before pulling back into the travel lanes.

⚠ CAUTION - Mud or snow

If one of the front or rear wheels begins to spin in mud, snow, etc. the vehicle can sometimes be driven out by engaging the accelerator pedal further; however avoid running the engine continuously at high rpm because doing so could damage the AWD system.

ON ENG 5.qxp 3/18/2019 2:41 PM Page 26

Driving in sand or mud

- Maintain slow and constant speed. Operate the accelerator pedal slowly to ensure safe driving (wheel-slip prevention).
- Use tire chains driving in mud if necessary.
- Keep sufficient distance between your vehicle and the vehicle in front of you.
- Reduce vehicle speed and always check the road condition.
- Avoid speeding, rapid acceleration, sudden brake applications, and sharp turns to prevent getting stuck.
- When the vehicle is stuck in snow, sand or mud, the tires may not operate.

  This is to protect the transmission and not a malfunction.

✻ NOTICE

Moving the car forcibly to get out of mud or sand can cause damage/overheat of the engine or damage/breakdown of the transmission, differential or 4WD system as well as damage to tires. If excessive wheel slip occurs after entering a sandy/muddy road, the vehicle may fall into the sand/mud. When it happens, put a stone or a tree branch under the tire, and then try to pull out the car, or try to get it unstuck by repeatedly moving forwards and backwards.

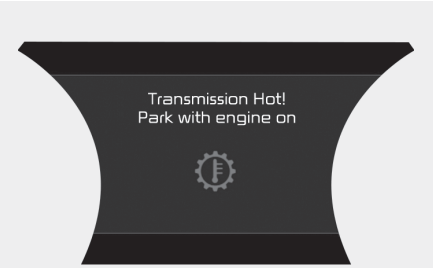

OON058129L

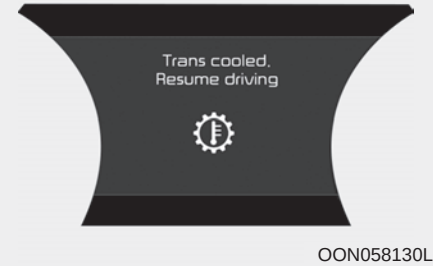

OON058130L

Transmission overheated

- When driving on muddy and sandy roads under the severe condition, the transmission could be overheated.

ON ENG 5.qxp 3/18/2019 2:41 PM Page 27

- When the transmission is overheated, the safe protection mode engages and the “Transmission Hot! Park with engine on” warning message will appear on the LCD display with a chime.
- If this occurs, pull over to a safe location, stop the vehicle with the engine running, apply the brakes and shift the vehicle to P (Park), and allow the transmission to cool.
- If you ignore this warning, the driving condition may become worse. You may experience abrupt shifts, frequent shifts, or jerkiness. To return to the normal driving condition, stop the vehicle and apply the foot brake or shift into P (Park). Then allow the transmission to cool for a few minutes with engine on, before driving off.
- When the message "Trans cooled. Resume driving.“ appears you can continue to drive your vehicle.

  If the warning messages in the LCD display continue to blink, for your safety, have the system checked by an authorized Kia dealer.

Reducing the risk of a rollover

This multi-purpose passenger vehicle is defined as a Sports Utility Vehicle (SUV).

Utility vehicles have a significantly higher rollover rate than other types of vehicles. SUV's have higher ground clearance and a narrower track to make them capable of performing in a wide variety of off-road applications.

Specific design characteristics give them a higher center of gravity than ordinary vehicles.

An advantage of the higher ground clearance is a better view of the road, which allows you to anticipate problems. They are not designed for cornering at the same speeds as conventional passenger vehicles, any more than low slung sports vehicles are designed to perform satisfactorily in off-road conditions. Due to this risk, driver and passengers are strongly recommended to buckle their seat belts. In a rollover crash, an unbelted person is significantly more likely to die than a person wearing a seat belt.

There are steps that a driver can make to reduce the risk of a rollover.

If at all possible, avoid sharp turns or abrupt maneuvers, do not load your roof rack with heavy cargo, and never modify your vehicle in any way.

ON ENG 5.qxp 3/18/2019 2:41 PM Page 28

⚠ WARNING - Rollover

As with other Sports Utility Vehicle (SUV), failure to operate this vehicle correctly may result in loss of control, an accident or vehicle rollover.

- **Utility vehicles have a significantly higher rollover rate than other types of vehicles.**
- **Specific design characteristics (higher ground clearance, narrower track, etc.) give this vehicle a higher center of gravity than ordinary vehicles.**
- **A SUV is not designed for cornering at the same speeds as conventional vehicles.**
- **Avoid sharp turns or abrupt maneuvers.**
- **In a rollover crash, an unbelted person is significantly more likely to die than a person wearing a seat belt. Make sure everyone in the vehicle is properly buckled up.**

⚠ WARNING

Your vehicle is equipped with tires designed to provide safe ride and handling capability. Do not use a size and type of tire and wheel that is different from the one that is originally installed on your vehicle. It can affect the safety and performance of your vehicle, which could lead to steering failure or rollover and serious injury. When replacing the tires, be sure to equip all four tires with the tire and wheel of the same size, type, tread, brand and load-carrying capacity. If you nevertheless decide to equip your vehicle with any tire/wheel combination not recommended by Kia for off road driving, you should not use these tires for highway driving.

⚠ WARNING - Jacked vehicle

While the full-time AWD vehicle is being raised on a jack, never start the engine or cause the tires to rotate.

There is the danger that rotating tires touching the ground could cause the vehicle to go off the jack and to jump forward.

- Full-time AWD vehicles must be tested on a special four wheel chassis dynamometer.

✻ NOTICE

Never engage the parking brake while performing these tests.

- A full-time AWD vehicle should not be tested on a FWD roll tester. If a FWD roll tester must be used, perform the following:

ON ENG 5.qxp 3/18/2019 2:41 PM Page 29

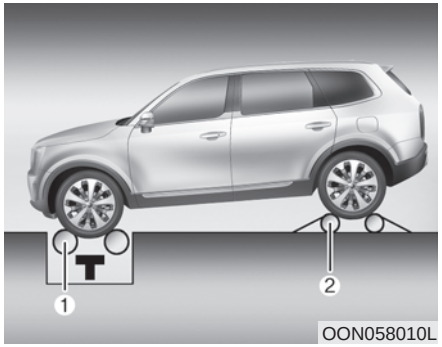

1. Check the tire pressures recommended for your vehicle.
2. Place the front wheels on the roll tester (1) for a speedometer test as shown in the illustration.
3. Release the parking brake.
4. Place the rear wheels on the temporary free roller (2) as shown in the illustration.

⚠ WARNING - Dynamometer testing

Keep away from the front of the vehicle while the vehicle is in gear on the dynamometer. This is very dangerous as the vehicle can jump forward and cause serious injury or death.

⚠ CAUTION

- ***When lifting up the vehicle, do not operate front and rear wheel separately. All four wheels should be operated.***
- ***If you need to operate the front wheel and rear wheel when lifting up the vehicle, you should release the parking brake.***

ON ENG 5.qxp 3/18/2019 2:41 PM Page 30

BRAKE SYSTEM

Power brakes

Your vehicle has power-assisted brakes that adjust automatically through normal usage.

In the event that the power-assisted brakes lose power because of a stalled engine or some other reason, you can still stop your vehicle by applying greater force to the brake pedal than you normally would. The stopping distance, however, will be longer.

When the engine is not running, the reserve brake power is partially depleted each time the brake pedal is applied. Do not pump the brake pedal when the power assist has been interrupted.

Pump the brake pedal only when necessary to maintain steering control on slippery surfaces.

⚠ WARNING - Brakes

- **Do not drive with your foot resting on the brake pedal. This will create abnormal high brake temperatures, excessive brake lining and pad wear, and increased stopping distances.**
- **When descending a long or steep hill, shift to a lower gear and avoid continuous application of the brakes. Continuous brake application will cause the brakes to overheat and could result in a temporary loss of braking performance.**
- **Wet brakes may impair the vehicle's ability to safely slow down; the vehicle may also pull to one side when the brakes are applied. Applying the brakes lightly will indicate whether they have been affected in this way.**

(Continued)

(Continued)

Always test your brakes in this fashion after driving through deep water. To dry the brakes, apply them lightly while maintaining a safe forward speed until brake performance returns to normal.

- **Always, confirm the position of the brake and accelerator pedal before driving. If you don't check the position of the accelerator and brake pedal before driving, you may press the accelerator instead of the brake pedal. It may cause a serious accident.**

ON ENG 5.qxp 3/18/2019 2:41 PM Page 31

In the event of brake failure

If service brakes fail to operate while the vehicle is in motion, you can make an emergency stop with the parking brake. The stopping distance, however, will be much greater than normal.

⚠ WARNING - Parking brake

Applying the parking brake while the vehicle is moving at normal speeds can cause a sudden loss of control of the vehicle. If you must use the parking brake to stop the vehicle, use great caution in applying the brake.

⚠ CAUTION

Do not operate the parking brake while the vehicle is moving except in an emergency situation. It could damage the vehicle system and make endanger driving safety.

Disc brakes wear indicator

When your brake pads are worn and new pads are required, you will hear a high-pitched warning sound from your front brakes or rear brakes (if equipped). You may hear this sound come and go or it may occur whenever you press the brake pedal.

Please remember that some driving conditions or climates may cause a brake squeal when you first apply (or lightly apply) the brakes. This is normal and does not indicate a problem with your brakes.

⚠ CAUTION

- ***To avoid costly brake repairs, do not continue to drive with worn brake pads.***
- ***Always replace the front or rear brake pads as pairs.***

⚠ WARNING - Brake wear

This brake wear warning sound means your vehicle needs service. If you ignore this audible warning, you will eventually lose braking performance, which could lead to a serious accident.

ON ENG 5.qxp 3/18/2019 2:41 PM Page 32

Parking brake - Foot type (if equipped)

Applying the parking brake



OON058011L

To engage the parking brake, first apply the foot brake and then press the parking brake pedal down as far as possible.

In addition it is recommended that when parking the vehicle on an incline, the shift lever should be in the P (Park) position on automatic transmission vehicles.

⚠ CAUTION

- ***Driving with the parking brake applied will cause excessive brake pad (or lining) and brake rotor wear.***
- ***Do not operate the parking brake while the vehicle is moving except in an emergency situation. It could damage the vehicle system and make endanger driving safety.***

Releasing the parking brake



OON058012L

To release the parking brake, press the parking brake pedal a second time while applying the foot brake. The pedal will automatically extend to the fully released position.

If the parking brake does not release or does not release all the way, have the system checked by a professional workshop. Kia recommends to visit an authorized Kia dealer/service partner.

ON ENG 5.qxp 3/18/2019 2:41 PM Page 33

⚠ WARNING

- **To prevent unintentional movement when stopped and leaving the vehicle, do not use the shift lever instead of the parking brake. Set the parking brake AND make sure the shift lever is securely positioned in P (Park) for automatic transmission equipped vehicles.**
- **Never allow anyone who is unfamiliar with the vehicle to touch the parking brake. If the parking brake is released unintentionally, serious injury may occur.**
- **All vehicles should always have the parking brake fully engaged when parking to avoid inadvertent movement of the vehicle which can injure occupants or pedestrians.**

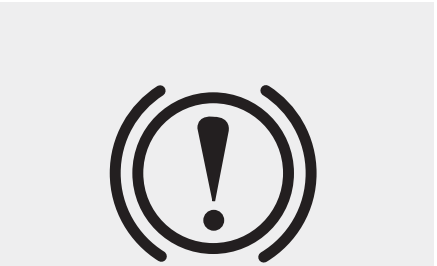

WK-23_TF

Check the brake warning light by turning the Engine Start/Stop button ON (do not start the engine). This light will be illuminated when the parking brake is applied with the Engine Start/Stop button in the START or ON position.

Before driving, be sure the parking brake is fully released and the brake warning light is off.

If the brake warning light remains on after the parking brake is released while the engine is running, there may be a malfunction in the brake system. Immediate attention is necessary.

If at all possible, cease driving the vehicle immediately. If that is not possible, use extreme caution while operating the vehicle and only continue to drive the vehicle until you can reach a safe location or repair shop.

ON ENG 5.qxp 3/18/2019 2:41 PM Page 34

Electronic parking brake (EPB) (if equipped)

Applying the parking brake

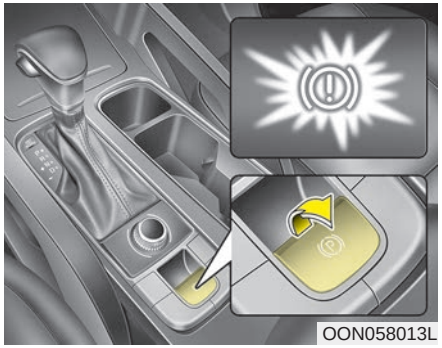
OON058013L

To apply the EPB (electronic parking brake):

1. Press the brake pedal.
2. Pull up the EPB switch.

Make sure the warning light comes on.

Also, the EPB is applied automatically if the Auto Hold button is on when the engine is turned off. However, if you keep pressing the EPB switch till the engine is turned off, the EPB will not be applied.

✻ NOTICE

On a steep incline or when pulling a trailer if the vehicle does not stand still, do as follows:

1. Apply the EPB.
2. Pull up the EPB switch for more than 3 seconds.

⚠ CAUTION

Do not operate the parking brake while the vehicle is moving except in an emergency situation. It could damage the vehicle system and endanger driving safety.

Releasing the parking brake

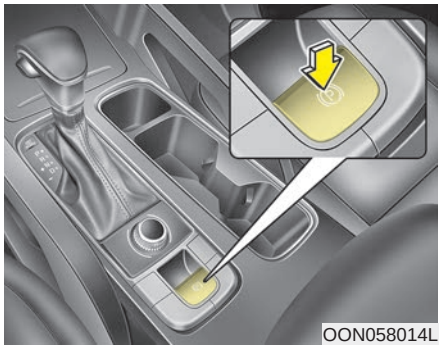
OON058014L

To release the EPB (electronic parking brake), press the EPB switch in the following condition:

- Have the engine start/stop button in the ON position.
- Press the brake pedal.

Make sure the brake warning light goes off.

ON ENG 5.qxp 3/18/2019 2:41 PM Page 35

To release EPB (electronic parking brake) automatically:

- Shift lever in P (Park)

  With the engine running engage the brake pedal and shift out of P (Park) to R (Rear) or D (Drive).
- Shift lever in N (Neutral)

  With the engine running engage the brake pedal and shift out of N (Neutral) to R (Rear) or D (Drive).
- Automatic transmission vehicle

  1. Start the engine.
  2. Fasten the driver's seat belt.
  3. Close the driver's door, engine hood and tailgate.
  4. Press the accelerator pedal while the shift lever is in R (Rear), D (Drive) or Sports mode.

Make sure the brake warning light goes off.

✻ NOTICE

- **For your safety, you can engage the EPB even though the engine stop/start button is in the OFF position, but you cannot release it.**
- **For your safety, press the brake pedal and release the parking brake manually with the EPB switch when you drive downhill or when backing up the vehicle.**

⚠ CAUTION

- ***If the parking brake warning light is still on even though the EPB has been released, have the system checked by a professional workshop. Kia recommends to visit an authorized Kia dealer/ service partner.***
- ***Do not drive your vehicle with the EPB applied. It may cause excessive brake pad and brake rotor wear.***

EPB (electronic parking brake) may be automatically applied when:

- The EPB is overheated
- Requested by other systems

✻ NOTICE

If the driver turns the engine off by mistake while Auto Hold is operating, EPB will be automatically applied. (Vehicle's equipped with Auto Hold)

ON ENG 5.qxp 3/18/2019 2:41 PM Page 36

Warning messages

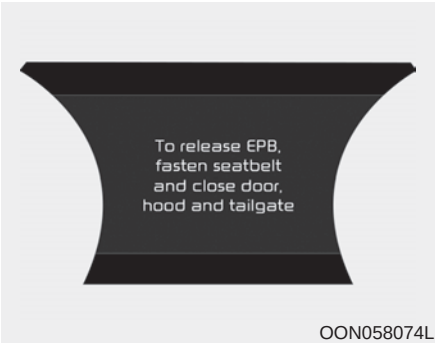

OON058074L

To release EPB, fasten seatbelt and close door, hood and tailgate

- If you try to drive off while engaging the accelerator pedal with the EPB applied, but doesn't release automatically, a warning will sound and a message will appear.
- If the driver's seat belt is not fastened and the engine hood or tailgate is opened, a warning will sound and a message will appear.
- If there is a problem with the vehicle, a warning may sound and a message may appear.

If the above situation occurs, press the brake pedal and release EPB by pressing the EPB switch.

⚠ WARNING

- **To prevent unintentional movement when stopped and leaving the vehicle, do not use the shift lever in place of the parking brake. Set the parking brake and make sure the shift lever is securely positioned in P (Park).**
- **Never allow anyone who is unfamiliar with the vehicle to touch the parking brake. If the parking brake is released unintentionally, serious injury may occur.**
- **All vehicles should always have the parking brake fully engaged when parking to avoid inadvertent movement of the car which can injure occupants or pedestrians.**

⚠ CAUTION

- ***A click sound may be heard while operating or releasing the EPB, but these conditions are normal and indicate that the EPB is functioning properly.***
- ***When leaving your keys with a parking lot attendant or valet, make sure to inform him/her how to operate the EPB.***
- ***The EPB may malfunction if you drive with the EPB applied.***
- ***When you automatically release EPB by pressing the accelerator pedal, press it slowly.***

ON ENG 5.qxp 3/18/2019 2:41 PM Page 37

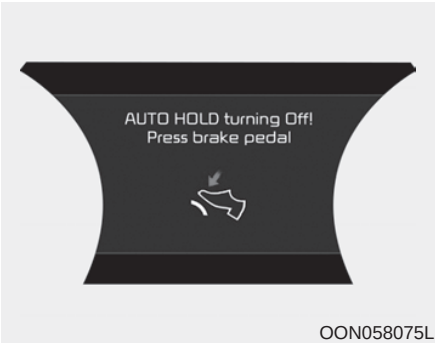

OON058075L

AUTO HOLD turning off!

Press brake pedal

When the conversion from Auto Hold to EPB is not working properly a warning will sound and a message will appear.

⚠ CAUTION

Engage the brake pedal when the above message appears for the Auto Hold and EPB may not activate.



OON058076L

Parking brake automatically engaged

If the EPB is applied while Auto Hold is activated because of ESC (Electronic Stability Control) signal, a warning will sound and a message will appear.

EPB malfunction indicator (if equipped)



OON058126L

This warning light illuminates if the engine start/stop button is changed to the ON position and goes off in approximately 3 seconds if the system is operation normally.

If the EPB malfunction indicator remains on, comes on while driving, or does not come on when the engine start/stop button is changed to the ON position, this indicates that the EPB may have malfunctioned.

ON ENG 5.qxp 3/18/2019 2:41 PM Page 38

If this occurs, have the system checked by a professional workshop. Kia recommends to visit an authorized Kia dealer/service partner.

The EPB malfunction indicator may illuminate when the ESC indicator comes on to indicate that the ESC is not working properly, but it does not indicate a malfunction of the EPB.

⚠ CAUTION

- ***The EPB warning light may illuminate if the EPB switch operates abnormally. Shut the engine off and turn it on again after a few minutes. The warning light will go off and the EPB switch will operate normally. However, if the EPB warning light is still on, have the system checked by a professional workshop. Kia recommends to visit an authorized Kia dealer/service partner.***
- ***If the parking brake warning light does not illuminate or blinks even though the EPB switch was pulled up, the EPB is not applied.***

(Continued)

(Continued)

- ***If the parking brake warning light blinks when the EPB warning light is on, press the switch, then pull it up. Once more press it back to its original position and pull it back up. If the EPB warning does not go off, have the system checked by a professional workshop. Kia recommends to visit an authorized Kia dealer/service partner.***

ON ENG 5.qxp 3/18/2019 2:41 PM Page 39

Emergency braking

If there is a problem with the brake pedal while driving, emergency braking is possible by pulling up and holding the EPB switch. Braking is possible only while you are holding the EPB switch.

⚠ WARNING

Do not operate the parking brake while the vehicle is moving except in an emergency situation.

✻ NOTICE

During emergency braking by the EPB, the parking brake warning light will illuminate to indicate that the system is operating.

⚠ CAUTION

If you continuously notice a noise or burning smell when the EPB is used for emergency braking, have the system checked by a professional workshop.

Kia recommends to visit an authorized Kia dealer/service partner.

When the EPB (electronic parking brake) does not release

If the EPB does not release normally, load the vehicle on a flatbed tow truck and have the system checked by a professional workshop. Kia recommends to visit an authorized Kia dealer/service partner.

ON ENG 5.qxp 3/18/2019 2:41 PM Page 40

AUTO HOLD (if equipped)

The Auto Hold maintains the vehicle in a standstill even though the brake pedal is not pressed after the driver brings the vehicle to a complete stop by pressing the brake pedal.

Set up

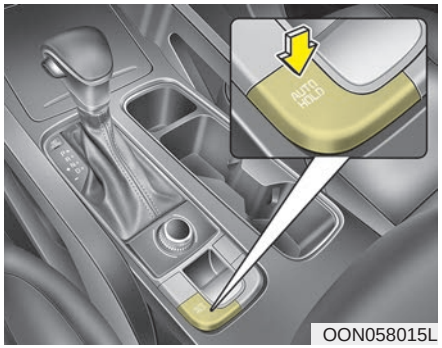

OON058015L

1. With the driver's door, engine hood and tailgate closed or press the brake pedal and then press the Auto Hold button. The white AUTO HOLD indicator will come on and the system will be in the standby position.


OON058016L

2. When you stop the vehicle completely by pressing the brake pedal, the AUTO HOLD indicator changes from white to green.
3. The vehicle will remain stationary even if you release the brake pedal.
4. If EPB is applied, Auto Hold will be released.

ON ENG 5.qxp 3/18/2019 2:41 PM Page 41

Leaving

If you press the accelerator pedal with the shift lever in, D (Drive) or sports mode, the Auto Hold will be released automatically and the vehicle will start to move. The indicator changes from green to white.

⚠ WARNING

When driving off from Auto Hold by pressing the accelerator pedal, always check the surrounding area near your vehicle.

Slowly engage the accelerator pedal for a smooth launch.

Cancel

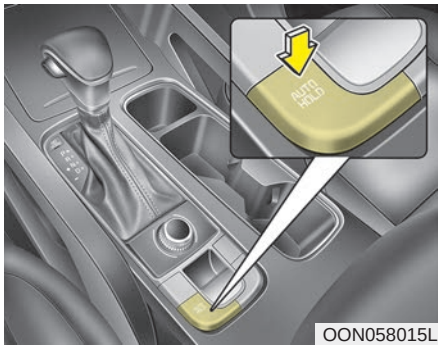

OON058015L

To cancel the Auto Hold operation, press the Auto Hold switch. The AUTO HOLD indicator will go out.

To cancel the Auto Hold operation when the vehicle is at a standstill, press the Auto Hold switch while pressing the brake pedal.

✻ NOTICE

- **The Auto Hold does not operate when:**
  - **The driver's door is opened**
  - **The engine hood is opened when the shift lever is in D (Drive), N (Neutral)**
  - **The shift lever is in P (Park), R (Reverse)**
  - **The shift lever is in P (Park)**
  - **The EPB is applied**
- **For your safety, the Auto Hold automatically switches to EPB in such cases:**
  - **The driver's door is opened**
  - **The engine hood is opened when the shift lever is in D (Drive), N (Neutral)**
  - **The vehicle is in a standstill for more than 10 minutes**
  - **The vehicle is standing on a steep slope**
  - **The vehicle moved several times**

(Continued)

ON ENG 5.qxp 3/18/2019 2:41 PM Page 42

(Continued)

In these cases, the brake warning light comes on, the AUTO HOLD indicator changes from green to white, and a warning sounds and a message will appear to inform you that EPB has been automatically engaged. Before driving off again, press foot brake pedal, check the surrounding area near your vehicle and release parking brake manually with the EPB switch.

- **If the AUTO HOLD indicator lights up yellow, the Auto Hold is not working properly. In this case, have your vehicle inspected by a professional workshop. Kia recommends to contact an authorized Kia dealer/service partner.**
- **While operating Auto Hold, you may heard mechanical noise. However, it is normal operation noise.**

⚠ WARNING

- **Press the accelerator pedal slowly when you start the vehicle.**
- **For your safety, cancel the Auto Hold when you drive downhill or back up the vehicle or park the vehicle.**

⚠ CAUTION

If there is a malfunction with the driver's door, engine hood or tailgate open detection system, the Auto Hold may not work properly.

In this case, have your vehicle inspected by a professional workshop. Kia recommends to contact an authorized Kia dealer/service partner.

Warning messages

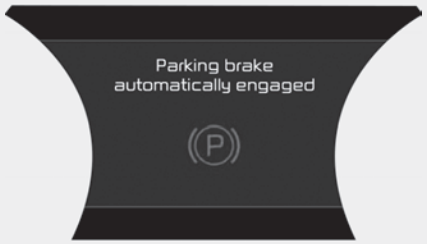

OON058076L

Parking brake automatically engaged

When the EPB is applied from Auto Hold, a warning will sound and a message will appear.

ON ENG 5.qxp 3/18/2019 2:41 PM Page 43



OON058075L

AUTO HOLD turning off!

Press brake pedal

When the conversion from Auto Hold to EPB is not working properly a warning will sound and a message will appear.

✻ NOTICE

When this message is displayed, the Auto Hold and EPB may not operate. For your safety, depress the brake pedal.

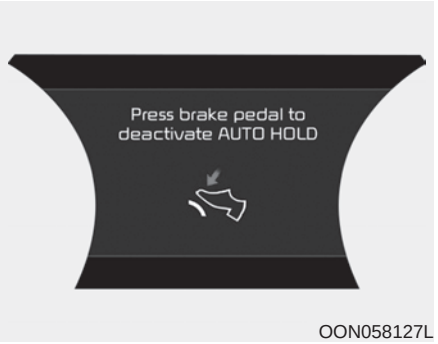

OON058127L

Press brake pedal to deactivate AUTO HOLD

If you did not apply the brake pedal when you release the Auto Hold by pressing the [AUTO HOLD] switch, a warning will sound and a message will appear.



OON058128L

AUTO HOLD conditions not met.

Close door, hood, and tailgate

When you press the [AUTO HOLD] switch, if the driver's door, engine hood and tailgate are not closed, a warning will sound and a message will appear on the LCD display. At this moment, press the [AUTO HOLD] button after closing the driver's door, engine hood and tailgate.

ON ENG 5.qxp 3/18/2019 2:41 PM Page 44

Anti-lock brake system (ABS)

⚠ WARNING

ABS (or ESC) will not prevent accidents due to improper or dangerous driving maneuvers. Even though vehicle control is improved during emergency braking, always maintain a safe distance between you and objects ahead. Vehicle speeds should always be reduced during extreme road conditions.

The braking distance for vehicle equipped with an anti-lock braking system (or Electronic Stability Control) may be longer than for those without it in the following road conditions.

During these conditions the vehicle should be driven at reduced speeds:

- **Rough, gravel or snow-covered roads.**
- **With tire chains installed.**

(Continued)

(Continued)

- **On roads where the road surface is pitted or has different surface height.**

The safety features of an ABS (or ESC) equipped vehicle should not be tested by high speed driving or cornering. This could endanger the safety of yourself or others.

The ABS continuously senses the speed of the wheels. If the wheels are going to lock, the ABS system repeatedly modulates the hydraulic brake pressure to the wheels.

When you apply your brakes under conditions which may lock the wheels, you may hear a “tik-tik” sound from the brakes, or feel a corresponding sensation in the brake pedal. This is normal and it means your ABS is active.

In order to obtain the maximum benefit from your ABS in an emergency situation, do not attempt to modulate your brake pressure and do not try to pump your brakes. Press your brake pedal as hard as possible or as hard as the situation warrants and allow the ABS to control the force being delivered to the brakes.

ON ENG 5.qxp 3/18/2019 2:41 PM Page 45

✻ NOTICE

A click sound may be heard in the engine compartment when the vehicle begins to move after the engine is started. These conditions are normal and indicate that the anti-lock brake system is functioning properly.

- Even with the anti-lock brake system, your vehicle still requires sufficient stopping distance. Always maintain a safe distance from the vehicle in front of you.
- Always slow down when cornering. The anti-lock brake system cannot prevent accidents resulting from excessive speeds.
- On loose or uneven road surfaces, operation of the anti-lock brake system may result in a longer stopping distance than for vehicles equipped with a conventional brake system.



W-78

⚠ CAUTION

- ***If the ABS warning light is on and stays on, you may have a problem with the ABS. In this case, however, your regular brakes will work normally.***

(Continued)

ON ENG 5.qxp 3/18/2019 2:41 PM Page 46

(Continued)

- *The ABS warning light will stay on for approximately 3 seconds after the Engine Start/Stop button is ON. During that time, the ABS will go through self-diagnosis and the light will go off if everything is normal. If the light stays on, you may have a problem with your ABS. In this case, have your vehicle inspected by a professional workshop. Kia recommends to contact an authorized Kia dealer/service partner.*

⚠ CAUTION

- *When you drive on a road having poor traction, such as an icy road, and operate your brakes continuously, the ABS will be active continuously and the ABS warning light may illuminate. Pull your vehicle over to a safe place and stop the engine.*
- *Restart the engine. If the ABS warning light is off, then your ABS system is normal. Otherwise, you may have a problem with the ABS. In this case, have your vehicle inspected by a professional workshop. Kia recommends to contact an authorized Kia dealer/service partner.*

✻ NOTICE

When you jump start your vehicle because of a drained battery, the engine may not run as smoothly and the ABS warning light may turn on at the same time. This happens because of the low battery voltage. It does not mean your ABS is malfunctioning.

- **Do not pump your brakes!**
- **Have the battery recharged before driving the vehicle.**

ON ENG 5.qxp 3/18/2019 2:42 PM Page 47

Electronic stability control (ESC)

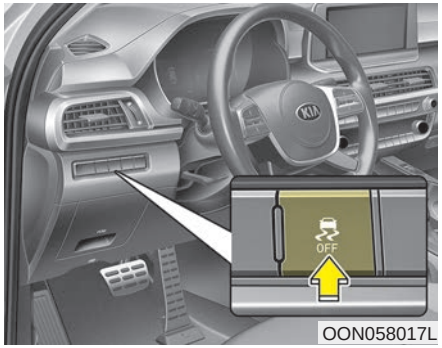

The Electronic Stability Control (ESC) system is designed to stabilize the vehicle during cornering maneuvers. ESC checks where you are steering and where the vehicle is actually going. ESC applies the brakes at individual wheels and intervenes with engine management system to stabilize the vehicle.

⚠ WARNING

Never drive too fast for the road conditions or too quickly when cornering. Electronic stability control (ESC) will not prevent accidents. Excessive speed in turns, abrupt maneuvers and hydroplaning on wet surfaces can still result in serious accidents. Only a safe and attentive driver can prevent accidents by avoiding maneuvers that cause the vehicle to lose traction. Even with ESC installed, always follow all the normal precautions for driving - including driving at safe speeds for the conditions.

The Electronic stability control (ESC) system is an electronic system designed to help the driver maintain vehicle control under adverse conditions. It is not a substitute for safe driving practices. Factors including speed, road conditions and driver steering input can all affect whether ESC will be effective in preventing a loss of control. It is still your responsibility to drive and corner at reasonable speeds and to leave a sufficient margin of safety.

When you apply your brakes under conditions which may lock the wheels, you may hear a “tik-tik” sound from the brakes, or feel a corresponding sensation in the brake pedal. This is normal and it means your ESC is active.

ON ENG 5.qxp 3/18/2019 2:42 PM Page 48

✻ NOTICE

A click sound may be heard in the engine compartment when the vehicle begins to move after the engine is started. These conditions are normal and indicate that the Electronic stability control (ESC) System is functioning properly.

ESC operation

ESC ON condition

-

- When the ignition is turned ON, ESC and ESC OFF indicator lights illuminate for approximately 3 seconds, then ESC is turned on.
- Press the ESC OFF button for at least half a second after turning the ignition ON to turn ESC off. (ESC OFF indicator will illuminate). To turn the ESC on, press the ESC OFF button (ESC OFF indicator light will go off).
- When starting the engine, you may hear a slight ticking sound. This is the ESC performing an automatic system self-check and does not indicate a problem.

When operating



When the ESC is in operation, ESC indicator light blinks.

- When the Electronic Stability Control is operating properly, you can feel a slight pulsation in the vehicle. This is only the effect of brake control and indicates nothing unusual.
- When moving out of the mud or slippery road, the engine rpm (revolution per minute) may not increase even if you press the accelerator pedal deeply. This is to maintain the stability and traction of the vehicle and does not indicate a problem.

ON ENG 5.qxp 3/18/2019 2:42 PM Page 49

ESC operation off

ESC OFF state



This car has 2 kinds of ESC off states.

If the engine stops when ESC is off, ESC remains off. Upon restarting the engine, the ESC will automatically turn on again.

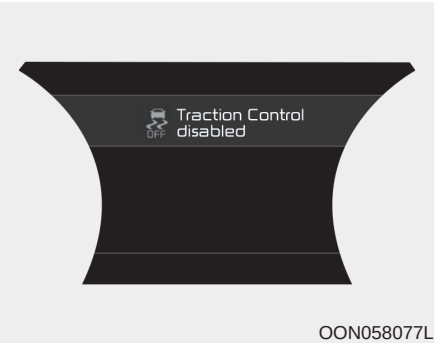

OON058077L

• ESC off state 1

To cancel ESC operation, press the ESC OFF button (ESC OFF) shortly (ESC OFF indicator light (ESC OFF) illuminates). At this state, the engine control function does not operate. It means the traction control function does not operate. Brake control function only operates.

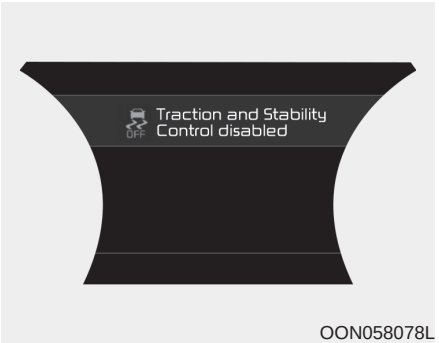

OON058078L

• ESC off state 2

To cancel ESC operation, press the ESC OFF button (ESC OFF) for more than 3 seconds. ESC OFF indicator light (ESC OFF) illuminates and ESC OFF warning chime will sound. At this state, the engine control function and brake control function do not operate. It means the car stability control function does not operate any more.

ON ENG 5.qxp 3/18/2019 2:42 PM Page 50

Indicator light

■ ESC indicator light



■ ESC OFF indicator light



When the Engine Start/Stop button is turned to ON, the indicator light illuminates, then goes off if the ESC system is operating normally.

The ESC indicator light blinks whenever ESC is operating or illuminates when ESC fails to operate.

ESC OFF indicator light comes on when the ESC is turned off with the button.

⚠ CAUTION

Driving with varying tire or wheel sizes may cause the ESC system to malfunction. When replacing tires, make sure they are the same size as your original tires.

⚠ WARNING

The Electronic Stability Control system is only a driving aid; use precautions for safe driving by slowing down on curved, snowy, or icy roads. Drive slowly and don't attempt to accelerate whenever the ESC indicator light is blinking, or when the road surface is slippery.

ESC OFF usage

When driving

- ESC should be turned on for daily driving whenever possible.
- To turn ESC off while driving, press the ESC OFF button while driving on a flat road surface.

⚠ WARNING

Never press the ESC OFF button while ESC is operating (ESC indicator light blinks).

If ESC is turned off while ESC is operating, the vehicle may slip out of control.

ON ENG 5.qxp 3/18/2019 2:42 PM Page 51

✻ NOTICE

- **When operating the vehicle on a dynamometer, ensure that the ESC is turned off by pressing the ESC OFF button for more than 3 seconds (ESC OFF light illuminated). If the ESC is left on, it may prevent the vehicle speed from increasing, and result in false diagnosis.**
- **Turning the ESC off does not affect ABS or brake system operation.**

Vehicle stability management (VSM)

This system provides further enhancements to vehicle stability and steering responses when a vehicle is driving on a slippery road or a vehicle detected changes in coefficient of friction between right wheels and left wheels when braking.

VSM operation

When the VSM is operating:

- ESC (Electronic Stability Control) ( ) light will blink.
- The steering wheel may be controlled.

When the vehicle stability management is operating properly, you can feel a slight pulsation in the vehicle. This is only the effect of brake control and indicates nothing unusual.

The VSM does not operate when:

- Driving on bank road such as gradient or incline
- Driving rearward
- ESC OFF indicator light ( ) remains on the instrument cluster
- EPS (Electronic Power Steering) indicator light remains on the instrument cluster

VSM operation off

If you press the ESC OFF button to turn off the ESC, the VSM will also cancel and the ESC OFF indicator light ( ) illuminates.

To turn on the VSM, press the button again. The ESC OFF indicator light goes out.

ON ENG 5.qxp 3/18/2019 2:42 PM Page 52

Malfunction indicator

The VSM can be deactivated even if you don't cancel the VSM operation by pressing the ESC OFF button. It indicates that a malfunction has been detected somewhere in the EPS (Electronic Power Steering) system or VSM system. If the ESC indicator light ( ) or EPS warning light remains on, have the system checked by a professional workshop. Kia recommends to visit an authorized Kia dealer/service partner.

✻ NOTICE

- **The VSM is designed to function above approximately 22 km/h (13 mph) on curves.**
- **The VSM is designed to function above approximately 10 km/h (6 mph) when a vehicle is braking on a split-mu road. The split-mu road is made of surfaces which have different friction forces.**

⚠ WARNING

- **The Vehicle Stability Management system is not a substitute for safe driving practices but a supplementary function only. It is the responsibility of the driver to always check the speed and the distance to the vehicle ahead. Always hold the steering wheel firmly while driving.**
- **Your vehicle is designed to activate according to the driver's intention, even with the VSM installed. Always follow all the normal precautions for driving at safe speeds for the conditions – including driving in inclement weather and on a slippery road.**
- **Driving with varying tire or wheel sizes may cause the VSM system to malfunction. When replacing tires, make sure they are the same size as your original tires.**

Trailer stability assist (TSA)

Trailer stability assist is operated as vehicle stability control system. Trailer stability assist system has an effort to stabilize the vehicle and trailer when the trailer sways or oscillates. There are various reasons making vehicle sway and oscillate. Almost case it happens at high speed however, if the trailer is affected by crosswinds, buffeting, and improper overloading, it may be a risk of swaying.

Factors of swaying such as:

- High speed
- Strong crosswinds
- Improper overloading
- Sudden controlling of steering wheel
- Uneven road

ON ENG 5.qxp 3/18/2019 2:42 PM Page 53

Trailer stability assist system continuously analyzes the vehicle and trailer instability. When the Trailer stability assist system detects some sway, the brakes are applied automatically to stabilize the vehicle on the front wheel. However, if it is not enough to stabilize, the brakes are applied on all wheels automatically and engine power is properly reduced. When the vehicle is stable from swaying, trailer stability assist system does not operate.

Hill-start assist control (HAC)

A vehicle has the tendency to slip back on a steep hill when it starts to go after stopping. The Hill-start Assist Control (HAC) prevents the vehicle from slipping back by operating the brakes automatically for about 1~2 seconds. The brakes are released when the accelerator pedal is engaged or after about 1~2 seconds.

⚠ WARNING

The HAC is activated only for about 1~2 seconds, so when the vehicle is starting off always engage the accelerator pedal.

✻ NOTICE

- **The HAC does not operate when the transmission shift lever is in the P (Park) or N (Neutral) position.**
- **The HAC activates even though the ESC is off but it does not activate when the ESC has malfunctioned.**

ON ENG 5.qxp 3/18/2019 2:42 PM Page 54

Good braking practices

⚠ WARNING

- **Whenever you leave or park your vehicle, always set the parking brake as far as possible and fully engage the vehicle's transmission into the P (Park) position. If the parking brake is not fully engaged, the vehicle may move inadvertently and injure yourself and others.**
- **All vehicles should always have the parking brake fully engaged when parking to avoid inadvertent movement of the vehicle which can injure occupants or pedestrians.**

- Check to be sure the parking brake is not engaged and that the parking brake indicator light is out before driving away.
- Driving through water may get the brakes wet. They can also get wet when the vehicle is washed. Wet brakes can be dangerous! Your vehicle will not stop as quickly if the brakes are wet. Wet brakes may cause the vehicle to pull to one side.

  To dry the brakes, apply the brakes lightly until the braking action returns to normal, taking care to keep the vehicle under control at all times. If the braking action does not return to normal, stop as soon as it is safe to do so and have your vehicle inspected by a professional workshop.

  Kia recommends to call an authorized Kia dealer/service partner.
- Do not coast down hills with the vehicle out of gear. This is extremely hazardous. Keep the vehicle in gear at all times, use the brakes to slow down, then shift to a lower gear so that engine braking will help you maintain a safe speed.
- Do not "ride" the brake pedal. Resting your foot on the brake pedal while driving can be dangerous because it can result in the brakes overheating and losing their effectiveness. It also increases the wear of the brake components.
- If a tire goes flat while you are driving, apply the brakes gently and keep the vehicle pointed straight ahead while you slow down. When you are moving slowly enough for it to be safe to do so, pull off the road and stop in a safe place.
- If your vehicle is equipped with an automatic transmission, do not let your vehicle creep forward. To avoid creeping forward, keep your foot firmly on the brake pedal when the vehicle is stopped.
- Be cautious when parking on a hill. Firmly engage the parking brake and place the shift lever in P (automatic transmission). If your vehicle is facing downhill, turn the front wheels into the curb to help keep the vehicle from rolling.

ON ENG 5.qxp 3/18/2019 2:42 PM Page 55

If your vehicle is facing uphill, turn the front wheels away from the curb to help keep the vehicle from rolling. If there is no curb or if it is required by other conditions to keep the vehicle from rolling, block the wheels.

- Under some conditions your parking brake can freeze in the engaged position. This is most likely to happen when there is an accumulation of snow or ice around or near the rear brakes or if the brakes are wet. If there is a risk that the parking brake may freeze, apply it only temporarily while you put the shift lever in P (automatic transmission) and block the rear wheels so the vehicle cannot roll. Then release the parking brake.
- Do not hold the vehicle on the upgrade with the accelerator pedal. This can cause the transmission to overheat. Always use the brake pedal or parking brake.

ON ENG 5.qxp 3/18/2019 2:42 PM Page 56

DRIVE MODE INTEGRATED CONTROL SYSTEM (FWD)

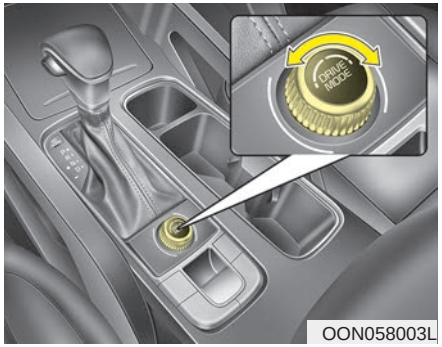

OON058003L

The drive mode may be selected according to the driver's preference or road condition.

The mode changes whenever the DRIVE MODE knob is turned.

- SMART mode : SMART mode automatically adjusts the driving mode (ECO ↔ COMFORT ↔ SPORT) in accordance with the driver's driving habits.
- COMFORT mode : COMFORT mode provides soft driving and comfortable riding.
- SPORT mode : SPORT mode provides sporty but firm riding.
- ECO mode : ECO mode improves fuel efficiency for eco-friendly driving.

The driving mode will be set to COMFORT or ECO mode when the engine is restarted. If it is in COMFORT/SPORT mode, COMFORT mode will be set when the engine is restarted.

If it is in Eco mode, Eco mode will be set when the engine is restarted.

SMART mode



OON058120L



OON058112L



OON058113L

ON ENG 5.qxp 3/18/2019 2:42 PM Page 57

SMART SMART mode selects the proper driving mode among ECO, COMFORT and SPORT by judging the driver's driving habits (i.e. mild or dynamic) from the brake pedal or the steering wheel operation.

- Turning the DRIVE MODE knob to activate SMART mode. When SMART mode is activated, the indicator illuminates on the instrument cluster.
- The vehicle starts in SMART mode, when the engine was turned OFF in SMART mode.
- SMART mode automatically controls the vehicle driving, such as gear shifting patterns, engine torque, in accordance with the driver's driving habits.

✻ NOTICE

- **When you mildly drive the vehicle in SMART mode, the driving mode changes to ECO mode to improve fuel efficiency. However, the actual fuel efficiency may differ in accordance with your driving situations (i.e. upward/downward slope, vehicle deceleration/acceleration).**
- **When you dynamically drive the vehicle in SMART mode by abruptly decelerating or sharply curving, the driving mode changes to SPORT mode. However, it may adversely affect fuel economy.**

Various driving situations, which you may encounter in SMART mode

- The driving mode automatically changes to ECO mode after a certain period of time, when you gently press the accelerator pedal (Your driving is categorized to be mild.).
- The driving mode automatically changes from SMART ECO mode to SMART NORMAL mode after a certain period of time, when you sharply or repetitively press the accelerator pedal.
- The driving mode automatically changes to SMART COMFORT mode with the same driving patterns, when the vehicle starts to drive on an upward slope of a certain angle. The driving mode automatically returns to SMART ECO mode, when the vehicle enters a leveled road.

ON ENG 5.qxp 3/18/2019 2:42 PM Page 58

- The driving mode automatically changes to SMART SPORT, when you abruptly accelerate the vehicle or repetitively operate the steering wheel (Your driving is categorized to be sporty.). In this mode, your vehicle drives in a lower gear for abrupt accelerating/decelerating and increases the engine brake performance.
- You may still sense the engine brake performance, even when you release the accelerator pedal in SMART SPORT mode. It is because your vehicle remains to be in a lower gear over a certain period of time for next acceleration. Thus, it is a normal driving situation, not indicating any malfunction.
- The driving mode automatically changes to SMART SPORT mode only in harsh driving situations. In most of the normal driving situations, the driving mode sets to be either in SMART ECO mode or in SMART COMFORT mode.

Limitation of SMART mode

The SMART mode may be limited in following situations. (The OFF indicator illuminates in those situations.)

- The driver manually moves the shift lever : It deactivates SMART mode. The vehicle drives, as the driver manually moves the shift lever.
- The cruise control is activated : The cruise system may deactivate the SMART mode. When a higher system is set by the cruise system, it starts to control vehicle speed and deactivates SMART mode. (SMART mode is not deactivated just by activing the cruise system.)
- The transmission oil temperature is either extremely low or extremely high : The SMART mode can be active in most of the normal driving situations. However, an extremely high/ low transmission oil temperature may temporarily deactivate the SMART mode, because the transmission condition is out of normal operation condition.

SPORT mode

SPORT SPORT mode manages the driving dynamics by automatically adjusting the steering effort, and the engine and transmission control logic for enhanced driver performance.

- When SPORT mode is selected by turning the DRIVE MODE knob, the SPORT indicator (orange color) will illuminate.
- Whenever the engine is restarted, the Drive Mode will revert back to COMFORT mode. If SPORT mode is desired, re-select SPORT mode from the DRIVE MODE knob.

ON ENG 5.qxp 3/18/2019 2:42 PM Page 59

- When SPORT mode is activated:
  - The engine rpm will tend to remain raised over a certain length of time even after releasing the accelerator
  - Upshifts are delayed when accelerating

✻ NOTICE

In SPORT mode, the fuel efficiency may decrease.

ECO mode

ECO

When the Drive Mode is set to ECO mode, the engine and transmission control logic are changed to maximize fuel efficiency.

- When ECO mode is selected by turning the Drive mode knob, the ECO indicator (green color) will illuminate.
- If the vehicle is set to ECO mode, when the engine is turned OFF and restarted the Drive Mode setting will remain in ECO mode.

✻ NOTICE

Fuel efficiency depends on the driver's driving habit and road condition.

When ECO mode is activated:

- The acceleration response may be slightly reduced if the accelerator pedal is engaged moderately.
- The shift pattern of the automatic transmission may change.

The above situations are normal conditions when ECO mode is activated to improve fuel efficiency.

ON ENG 5.qxp 3/18/2019 2:42 PM Page 60

Limitation of ECO mode operation:

If the following conditions occur while ECO mode is operating, the system operation is limited even though there is no change in the ECO indicator.

- When driving the vehicle with the automatic transmission gear shift lever in manual mode.

  The system will be limited according to the shift location.

ON ENG 5.qxp 3/18/2019 2:42 PM Page 61

DRIVE MODE INTEGRATED CONTROL SYSTEM (AWD)

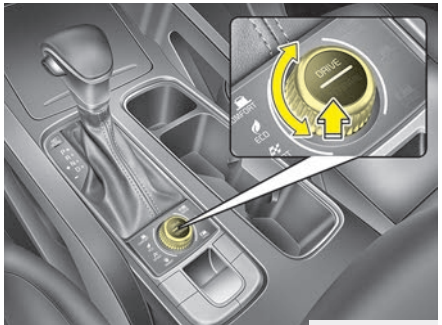

OON058033L

The drive mode may be selected according to the driver's preference or road condition.

When the DRIVE mode is activated by pressing the DRIVE/TERRAIN button, turn the knob to display as shown below.

The mode changes whenever the DRIVE/TERRAIN knob is turned.



OON058115L



OON058117L



OON058116L



OON058118L

- SMART mode : SMART mode automatically adjusts the driving mode (ECO ↔COMFORT ↔ SPORT) in accordance with the driver's driving habits.
- COMFORT mode : COMFORT mode provides soft driving and comfortable riding.
- SPORT mode : SPORT mode provides sporty but firm riding.
- ECO mode : ECO mode improves fuel efficiency for eco-friendly driving.

ON ENG 5.qxp 3/18/2019 2:42 PM Page 62

The driving mode will be set to COMFORT or ECO mode when the engine is restarted. If it is in COMFORT/SPORT mode, COMFORT mode will be set when the engine is restarted.

If it is in Eco mode, Eco mode will be set when the engine is restarted.

SMART mode



OON058120L



OON058112L



OON058113L

SMART SMART mode selects the proper driving mode among ECO, COMFORT and SPORT by judging the driver's driving habits (i.e. mild or dynamic) from the brake pedal or the steering wheel operation.

- Turning the DRIVE/TERRAIN knob to activate SMART mode. When SMART mode is activated, the indicator illuminates on the instrument cluster.
- The vehicle starts in SMART mode, when the engine was turned OFF in SMART mode.
- SMART mode automatically controls the vehicle driving, such as gear shifting patterns, engine torque, in accordance with the driver's driving habits.

ON ENG 5.qxp 3/18/2019 2:42 PM Page 63

✻ NOTICE

- **When you mildly drive the vehicle in SMART mode, the driving mode changes to ECO mode to improve fuel efficiency. However, the actual fuel efficiency may differ in accordance with your driving situations (i.e. upward/downward slope, vehicle deceleration/acceleration).**
- **When you dynamically drive the vehicle in SMART mode by abruptly decelerating or sharply curving, the driving mode changes to SPORT mode. However, it may adversely affect fuel economy.**

Various driving situations, which you may encounter in SMART mode

- The driving mode automatically changes to ECO mode after a certain period of time, when you gently press the accelerator pedal (Your driving is categorized to be mild.).
- The driving mode automatically changes from SMART ECO mode to SMART NORMAL mode after a certain period of time, when you sharply or repetitively press the accelerator pedal.
- The driving mode automatically changes to SMART COMFORT mode with the same driving patterns, when the vehicle starts to drive on an upward slope of a certain angle. The driving mode automatically returns to SMART ECO mode, when the vehicle enters a leveled road.
- The driving mode automatically changes to SMART SPORT, when you abruptly accelerate the vehicle or repetitively operate the steering wheel (Your driving is categorized to be sporty.). In this mode, your vehicle drives in a lower gear for abrupt accelerating/decelerating and increases the engine brake performance.
- You may still sense the engine brake performance, even when you release the accelerator pedal in SMART SPORT mode. It is because your vehicle remains to be in a lower gear over a certain period of time for next acceleration. Thus, it is a normal driving situation, not indicating any malfunction.
- The driving mode automatically changes to SMART SPORT mode only in harsh driving situations. In most of the normal driving situations, the driving mode sets to be either in SMART ECO mode or in SMART COMFORT mode.

ON ENG 5.qxp 3/18/2019 2:42 PM Page 64

Limitation of SMART mode

The SMART mode may be limited in following situations. (The OFF indicator illuminates in those situations.)

- The driver manually moves the shift lever : It deactivates SMART mode. The vehicle drives, as the driver manually moves the shift lever.
- The cruise control is activated : The cruise system may deactivate the SMART mode. When a higher system is set by the cruise system, it starts to control vehicle speed and deactivates SMART mode. (SMART mode is not deactivated just by activing the cruise system.)
- The transmission oil temperature is either extremely low or extremely high : The SMART mode can be active in most of the normal driving situations. However, an extremely high/ low transmission oil temperature may temporarily deactivate the SMART mode, because the transmission condition is out of normal operation condition.

SPORT mode

SPORT

SPORT mode manages the driving dynamics by automatically adjusting the steering effort, and the engine and transmission control logic for enhanced driver performance.

- When SPORT mode is selected by turning the DRIVE/TERRAIN knob, the SPORT indicator (orange color) will illuminate.
- Whenever the engine is restarted, the Drive Mode will revert back to COMFORT mode. If SPORT mode is desired, re-select SPORT mode from the DRIVE/TERRAIN knob.
- When SPORT mode is activated:
  - The engine rpm will tend to remain raised over a certain length of time even after releasing the accelerator
  - Upshifts are delayed when accelerating

✻ NOTICE

In SPORT mode, the fuel efficiency may decrease.

ON ENG 5.qxp 3/18/2019 2:42 PM Page 65

ECO mode

ECO

When the Drive Mode is set to ECO mode, the engine and transmission control logic are changed to maximize fuel efficiency.

- When ECO mode is selected by turning the Drive/TERRAIN mode knob, the ECO indicator (green color) will illuminate.
- If the vehicle is set to ECO mode, when the engine is turned OFF and restarted the Drive Mode setting will remain in ECO mode.

✻ NOTICE

Fuel efficiency depends on the driver's driving habit and road condition.

When ECO mode is activated:

- The acceleration response may be slightly reduced if the accelerator pedal is engaged moderately.
- The shift pattern of the automatic transmission may change.

The above situations are normal conditions when ECO mode is activated to improve fuel efficiency.

Limitation of ECO mode operation:

If the following conditions occur while ECO mode is operating, the system operation is limited even though there is no change in the ECO indicator.

- When driving the vehicle with the automatic transmission gear shift lever in manual mode.

  The system will be limited according to the shift location.

ON ENG 5.qxp 3/18/2019 2:42 PM Page 66

FORWARD COLLISION-AVOIDANCE ASSIST (FCA) SYSTEM - SENSOR FUSION TYPE (FRONT RADAR + FRONT CAMERA) (IF EQUIPPED)

The Forward Collision-Avoidance Assist (FCA) system is designed to help detect and monitor the vehicle ahead or detect a pedestrian or cyclists (if equipped) in the roadway through radar signals and camera recognition to warn the driver that a collision is imminent, and if necessary, apply emergency braking.

⚠ WARNING

Take the following precautions when using the Forward Collision-Avoidance Assist (FCA) system:

- **This system is only a supplemental system and it is not intended to, nor does it replace the need for extreme care and attention of the driver. The sensing range and objects detectable by the sensors are limited. Pay attention to the road conditions at all times.**
- **NEVER drive too fast in accordance with the road conditions or while cornering.**
- **Always drive cautiously to prevent unexpected and sudden situations from occurring. FCA does not stop the vehicle completely and is not a collision avoidance system.**

System setting and activation

System setting

- The driver can activate the FCA by placing the engine Start/Stop button to the ON position and by selecting:

  "User Settings → Driver assistance → Forward safety"

  - If you select "Active assist", the FCA system activates. The FCA produces warning messages and warning alarms in accordance with the collision risk levels. Also, it controls the brakes in accordance with the collision risk levels.
  - If you select "Warning only", the FCA system activates and produces only warning alarms in accordance with the collision risk levels. You should control the brake directly because the FCA system do not control the brake.
  - If you select "Off", the FCA system deactivates,

ON ENG 5.qxp 3/18/2019 2:42 PM Page 67



The warning light illuminates on the LCD display, when you cancel the FCA system. The driver can monitor the FCA ON/OFF status on the LCD display. Also, the warning light illuminates when the ESC (Electronic Stability Control) is turned off. If the warning light remains ON when the FCA is activated, have the system checked by a professional workshop. Kia recommends to visit an authorized Kia dealer/service partner.

- The driver can select the initial warning activation time on the LCD display.

  Go to the "User Settings → Driver assistance → Warning timing → Normal/Later".

The options for the initial Forward Collision Warning includes the following:

- Normal:

  When this condition is selected, the initial Forward Collision Warning is activated sensitively. If you feel the warning activates too early, set the Forward Collision Warning to 'Later'.

  Even though, 'Normal' is selected if the front vehicle suddenly stops the initial warning activation time may not seem fast.

- Later:

  When this condition is selected, the initial Forward Collision Warning is activated later than normal. This setting reduces the amount of distance between the vehicle, pedestrian or cyclist (if equipped) ahead before the initial warning occurs.

  Select 'Later' when traffic is light and when driving speed is slow.

❈ If you change the warning timing, the warning timing of other systems may change.

Always be aware of warning timing before changing the warning timing.

ON ENG 5.qxp 3/18/2019 2:42 PM Page 68

Prerequisite for activation

The FCA gets ready to be activated, when the FCA is selected on the LCD display, and when the following prerequisites are satisfied.

- The ESC (Electronic Stability Control) is on.
- Vehicle speed is over 8 km/h (5 mph). (The FCA is only activated within a certain speed range.)
- The system detects a pedestrian, cyclist (if equipped) or a vehicle in front, which may collide with your vehicle. (The FCA may not be activated or may sound a warning alarm in accordance with the driving situation or vehicle condition. If you select "Warning only", the FCA system activates and produces only warning alarms in accordance with the collision risk levels.)

❈ The FCA may not operate properly according to the frontal situation, the direction of pedestrian or cyclist (if equipped) and speed.

⚠ WARNING

- **Completely stop the vehicle on a safe location before operating the switch on the steering wheel to activate/ deactivate the FCA system.**
- **The FCA automatically activates upon placing the engine start/stop button to the ON position. The driver can deactivate the FCA by canceling the system setting on the LCD display.**
- **The FCA automatically deactivates upon canceling the ESC (Electronic Stability Control). When the ESC is canceled, the FCA cannot be activated on the LCD display. The FCA warning light will illuminate which is normal.**

FCA warning message and system control

The FCA produces warning messages and warning alarms in accordance with the collision risk levels, such as abrupt stopping of the vehicle in front, insufficient braking distance, pedestrian or cyclist (if equipped) detection. Also, it controls the brakes in accordance with the collision risk levels.

The driver can select the initial warning activation time in the User Settings in the LCD display. The options for the initial Forward Collision Warning include Normal or Later initial warning time.

ON ENG 5.qxp 3/18/2019 2:42 PM Page 69

Collision Warning (First warning)



OON058079L

The Vehicle may slow down slightly

- It will operate if the vehicle speed is greater than 8 km/h (5 mph) and less than or equal to 150 km/h (93 mph) on a forward vehicle. (Depending on the condition of the vehicle ahead and the environment surrounding it, the possible maximum operating speed may be reduced.)
- For pedestrians and cyclists, the vehicle speed is greater than or equal to 8 km/h (5 mph) and less than 85 km/h (53 mph). (Depending on the condition of pedestrians and bike riders and the surrounding environment the possible maximum operating speed may be reduced.)
  - If you select "Warning only", the FCA system activates and produces only warning alarms in accordance with the collision risk levels. You should control the brake directly because the FCA system do not control the brake.

Emergency braking (Second warning)

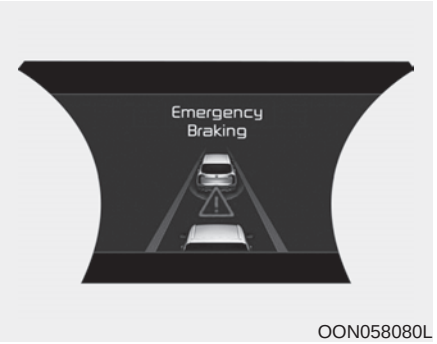

OON058080L

This warning message appears on the LCD display with a warning chime.

Additionally, some vehicle system intervention occurs by the engine management system to help decelerate the vehicle.

The brake control is maximized just before a collision, reducing impact when it strikes a forward vehicle.

ON ENG 5.qxp 3/18/2019 2:42 PM Page 70

- It will operate if the vehicle speed is greater than 8 km/h (5 mph) and less than or equal to 150 km/h (93 mph) on a forward vehicle. (Depending on the condition of the vehicle ahead and the environment surrounding it, the possible maximum operating speed may be reduced.)
- For pedestrians and cyclists, the vehicle speed is greater than or equal to 8 km/h (5 mph) and less than 65 km/h (40 mph). (Depending on the condition of pedestrians and bike riders and the surrounding environment the possible maximum operating speed may be reduced.)
  - If you select "Warning only", the FCA system activates and produces only warning alarms in accordance with the collision risk levels. You should control the brake directly because the FCA system do not control the brake.

Brake operation

- In an urgent situation, the braking system enters into the ready status for prompt reaction against the driver's utilization of the brake pedal.
- The FCA provides additional braking power for optimum braking performance, when the driver presses the brake pedal.
- The braking control is automatically deactivated, when the driver sharply presses the accelerator pedal, or when the driver abruptly operates the steering wheel.
- The FCA brake control is automatically canceled, when risk factors disappear.

⚠ CAUTION

The driver should always use extreme caution while operating the vehicle, whether or not there is a warning message or alarm from the FCA system.

⚠ WARNING

The braking control cannot completely stop the vehicle nor avoid all collisions. The driver should hold the responsibility to safely drive and control the vehicle.

ON ENG 5.qxp 3/18/2019 2:42 PM Page 71

⚠ WARNING

The FCA system logic operates within certain parameters, such as the distance from the vehicle, pedestrian or cyclist (if equipped) ahead, the speed of the vehicle ahead, and the driver's vehicle speed. Certain conditions such as inclement weather and road conditions may affect the operation of the FCA system.

⚠ WARNING

Never deliberately drive dangerously to activate the system.

FCA sensor

■ Front radar



OON058025L

■ Front camera

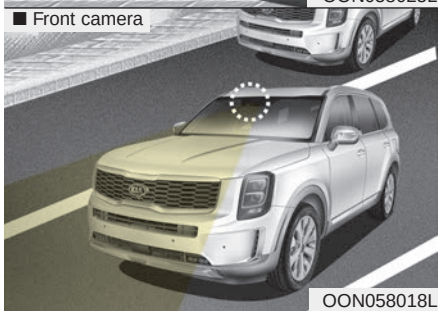

OON058018L

In order for the FCA system to operate properly, always make sure the sensor cover or sensor is clean and free of dirt, snow, and debris.

Dirt, snow, or foreign substances on the lens may adversely affect the sensing performance of the sensor.

ON ENG 5.qxp 3/18/2019 2:42 PM Page 72

✻ NOTICE

- **Do not apply license plate molding or foreign objects such as a bumper sticker or a bumper guard near the radar sensor. Doing so may adversely affect the sensing performance of the radar.**
- **Always keep the radar sensor and cover clean and free of dirt and debris.**
- **Use only a soft cloth to wash the vehicle. Do not spray pressurized water directly on the sensor or sensor cover.**
- **Be careful not to apply unnecessary force on the radar sensor or sensor cover. If the sensor is forcibly moved out of proper alignment, the FCA system may not operate correctly. In this case, a warning message may not be displayed. Have the vehicle inspected by a professional workshop. Kia recommends to visit an authorized Kia dealer/service partner.**

(Continued)

(Continued)

- **If the front bumper becomes damaged in the area around the radar sensor, the FCA system may not operate properly. Have the vehicle inspected by a professional workshop. Kia recommends to visit an authorized Kia dealer/service partner.**
- **Use only genuine parts to repair or replace a damaged sensor or sensor cover. Do not apply paint to the sensor cover.**

✻ NOTICE

- **NEVER install any accessories or stickers on the front windshield, nor tint the front windshield.**
- **NEVER place any reflective objects (i.e. white paper, mirror) over the dashboard. Any light reflection may cause a malfunction of the system.**
- **Pay special attention to keep the camera out of water.**
- **NEVER disassemble the camera assembly, nor impact the camera assembly.**
- **Playing the vehicle audio system at high volume may prevent you from hearing the system warning sounds.**

ON ENG 5.qxp 3/18/2019 2:42 PM Page 73

✻ NOTICE

Have the vehicle inspected by a professional workshop.
Kia recommends to visit an authorized Kia dealer/service partner when:

- **The windshield glass is replaced.**
- **The radar sensor or cover gets damaged or replaced.**

Warning message and warning light

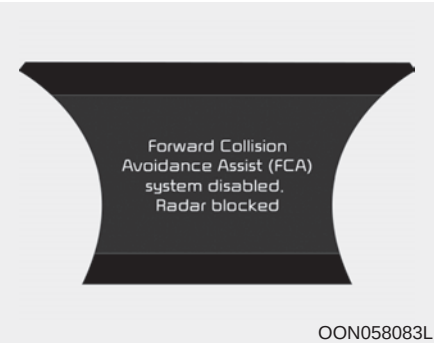

OON058083L

Forward Collision Avoidance Assist (FCA) system disabled. Radar blocked

When the sensor cover is blocked with dirt, snow, or debris, the FCA system operation may stop temporarily. If this occurs, a warning message will appear on the LCD display.

Remove any dirt, snow, or debris and clean the radar sensor cover before operating the FCA system.

The system will operate normally when such dirt, snow or debris is removed.

The FCA may not properly operate in an area (e.g. open terrain), where any substances are not detected after turning ON the engine.

⚠ WARNING

The FCA system may not activate according to the road conditions, inclement weather, driving conditions or traffic conditions.

ON ENG 5.qxp 3/18/2019 2:42 PM Page 74

System malfunction



OON058082L

Check Forward Collision Avoidance Assist system

- When the FCA is not working properly, the FCA warning light ( ) will illuminate and the warning message will appear for a few seconds. After the message disappears, the master warning light ( ) will illuminate. In this case, have the vehicle inspected by a professional workshop. Kia recommends to visit an authorized Kia dealer/service partner.
- The FCA warning message may appear along with the illumination of the ESC (Electronic Stability Control) warning light.

⚠ WARNING

- **The FCA is only a supplemental system for the driver's convenience. The driver should hold the responsibility to control the vehicle operation. Do not solely depend on the FCA system. Rather, maintain a safe braking distance, and, if necessary, utilize the brake pedal to reduce the driving speed.**
- **In certain instances and under certain driving conditions, the FCA system may activate unintentionally. This initial warning message appears on the LCD display with a warning chime.**

(Continued)

(Continued)

Also, in certain instances the front radar sensor or camera recognition system may not detect the vehicle, pedestrian or cyclist (if equipped) ahead. The FCA system may not activate and the warning message will not be displayed.

- **Even if there is any problem with the brake control function of the FCA system, the vehicle's basic braking performance will operate normally. However, brake control function for avoiding collision will not activate.**
- **If the vehicle in front stops suddenly, you may have less control of the brake system. Therefore, always keep a safe distance between your vehicle and the vehicle in front of you.**

(Continued)

ON ENG 5.qxp 3/18/2019 2:42 PM Page 75

(Continued)

- **The FCA system may activate during braking and the vehicle may stop suddenly shifting loose objects toward the passengers. Always keep loose objects secured.**
- **The FCA system may not activate if the driver applies the brake pedal to avoid a collision.**
- **The brake control may be insufficient, possibly causing a collision, if a vehicle in front abruptly stops. Always exercise extreme caution.**
- **Occupants may get injured, if the vehicle abruptly stops by the activated FCA system. Exercise extreme caution.**
- **The FCA system operates only to detect vehicles, pedestrian or cyclist (if equipped) in front of the vehicle.**

⚠ WARNING

- **The FCA system does not operate when the vehicle is in reverse.**
- **The FCA system is not designed to detect other objects on the road such as animals.**
- **The FCA system does not detect vehicles in the opposite lane.**
- **The FCA system does not detect cross traffic vehicles that are approaching.**
- **The FCA system cannot detect the side profile of a vehicle.**

(Continued)

(Continued)

- **The FCA system cannot detect the cross traffic cyclist that are approaching.**

In these cases, you must maintain a safe braking distance, and if necessary, press the brake pedal to reduce the driving speed in order to maintain a safe distance.

ON ENG 5.qxp 3/18/2019 2:42 PM Page 76

Limitations of the system

The Forward Collision avoidance assist (FCA) system is designed to monitor the vehicle ahead or a pedestrian or cyclist (if equipped) in the roadway through radar signals and camera recognition to warn the driver that a collision is imminent, and if necessary, apply emergency braking.

In certain situations, the radar sensor or the camera may not be able to detect the vehicle, pedestrian or cyclist (if equipped) ahead. In these cases, the FCA system may not operate normally. The driver must pay careful attention in the following situations where the FCA operation may be limited.

Detecting vehicles

The sensor may be limited when:

- The radar sensor or camera is obstructed with a foreign object or debris
- The camera lens is obscured due to tinted, filmed or coated windshield, damaged glass, or residue of foreign objects (sticker, bug, etc.) on the glass
- Inclement weather such as heavy rain or snow obscures the field of view of the radar sensor or camera
- There is interference by electromagnetic waves
- There is severe irregular reflection from the radar sensor
- The radar/camera sensor recognition is limited
- The vehicle in front is too small to be detected (for example a motorcycle etc.)
- The vehicle in front is an oversize vehicle or trailer that is too big to be detected by the camera recognition system (for example a tractor trailer, etc.)
- The camera's field of view is not well illuminated (either too dark or too much reflection or too much backlight that obscures the field of view)
- The vehicle in front does not have their rear lights or their rear lights does not turned ON or their rear lights are located unusually.
- The outside brightness changes suddenly, for example when entering or exiting a tunnel
- When light coming from a street light or an oncoming vehicle is reflected on a wet road surface such as a puddle in the road
- The field of view in front is obstructed by sun glare or head light of oncoming vehicle.
- The windshield glass is fogged up; a clear view of the road is obstructed
- The vehicle in front is driving erratically
- The vehicle is on unpaved or uneven rough surfaces, or road with sudden gradient changes.

ON ENG 5.qxp 3/18/2019 2:42 PM Page 77

- The vehicle is driven near areas containing metal objects as a construction zone, railroad, etc.
- The vehicle drives inside a building, such as a basement parking lot
- The camera does not recognize the entire vehicle in front.
- The camera is damaged.
- The brightness outside is too low such as when the headlamps are not on at night or the vehicle is going through a tunnel.
- The shadow is on the road by a median strip, trees, etc.
- The vehicle drives through a tollgate.
- The rear part of the vehicle in front is not normally visible. (the vehicle turns in other direction or the vehicle is overturned.)
- The adverse road conditions cause excessive vehicle vibrations while driving
- The sensor is pointed too high or too low when passing over a speed bump
- The vehicle in front is moving perpendicular to the driving direction
- The vehicle in front is stopped perpendicular to traffic
- The vehicle in front is driving towards your vehicle or reversing
- You are on a roundabout and the vehicle in front is outside the viewing range

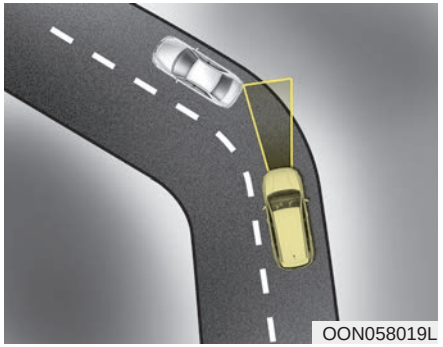
OON058019L

- Driving on a curve

The performance of the FCA system may be limited when driving on a curved road.

On curved roads, the other vehicle on the same lane is not recognized and the FCA system's performance may be degraded. This may result in unnecessary alarm or braking or no alarm or braking when necessary.

Also, in certain instances the front radar sensor or camera recognition system may not detect the vehicle traveling on a curved road.

ON ENG 5.qxp 3/18/2019 2:43 PM Page 78

In these cases, the driver must maintain a safe braking distance, and if necessary, engage the brake pedal to reduce your driving speed in order to maintain a safe distance.

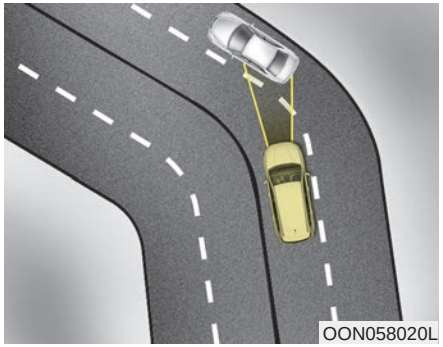
OON058020L

The FCA system may recognize a vehicle in the next lane when driving on a curved road.

In this case, the system may unnecessarily alarm the driver and apply the brake.

Always pay attention to road and driving conditions, while driving. If necessary, engage the brake pedal to reduce your driving speed in order to maintain a safe distance.

Also, when necessary press the accelerator pedal to prevent the system from unnecessarily decelerating your vehicle.

Check to be sure that the road conditions permit safe operation of FCA.

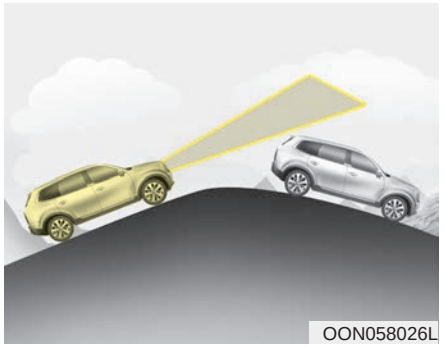
OON058026L

- Driving on a slope

The performance of the FCA decreases while driving upward or downward on a slope, not recognizing the vehicle in front in the same lane. It may unnecessarily produce the warning message and the warning alarm, or it may not produce the warning message and the warning alarm at all.

When the FCA suddenly recognizes the vehicle in front while passing over a slope, you may experience sharp deceleration.

ON ENG 5.qxp 3/18/2019 2:43 PM Page 79

Always keep your eyes forward while driving upward or downward on a slope, and, if necessary, press the brake pedal to reduce your driving speed in order to maintain distance.

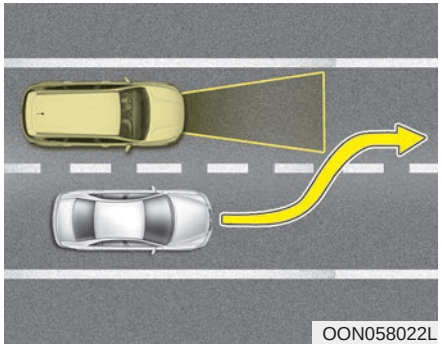
OON058022L

- Changing lanes

When a vehicle changes lanes in front of you, the FCA system may not immediately detect the vehicle, especially if the vehicle changes lanes abruptly. In this case, you must maintain a safe braking distance, and if necessary, press the brake pedal to reduce your driving speed in order to maintain a safe distance.

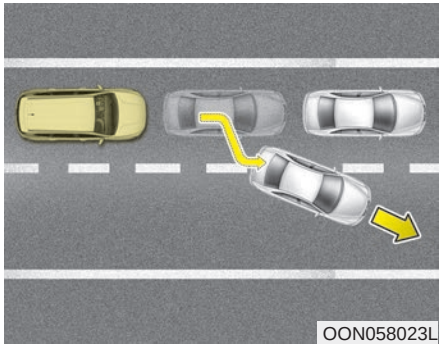
OON058023L

When driving in stop-and-go traffic, and a stopped vehicle in front of you switches out of your lane, the FCA system may not immediately detect the next vehicle ahead of you in your lane of travel. In this case, you must maintain a safe braking distance, and if necessary, press the brake pedal to reduce your driving speed in order to maintain a safe distance.

ON ENG 5.qxp 3/18/2019 2:43 PM Page 80

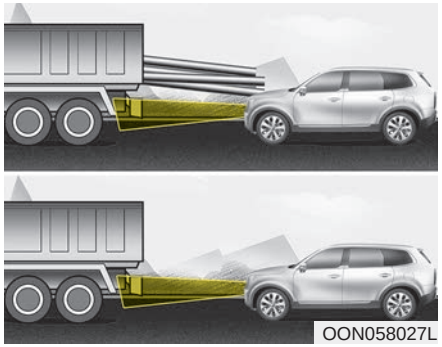
OON058027L

- Detecting the vehicle in front of you

If the vehicle in front of you has cargo that extends rearward from the cab, or when the vehicle in front of you has higher ground clearance, extra caution is required.

The FCA system may not be able to detect the cargo extending from the vehicle. In these instances, you must maintain a safe braking distance from the rearmost object, and if necessary, press the brake pedal to reduce your driving speed in order to maintain distance.

Detecting pedestrians or cyclists (if equipped)

The sensor may be limited when:

- The pedestrian or cyclist is not fully detected by the camera recognition system, for example, if the pedestrian is leaning over or is not fully walking upright
- The pedestrian or cyclist is moving very quickly or appears abruptly in the camera detection area
- The pedestrian or cyclist is wearing clothing that easily blends into the background, making it difficult to be detected by the camera recognition system
- The outside lighting is too bright (e.g. when driving in bright sunlight or in sun glare) or too dark (e.g. when driving on a dark rural road at night)
- It is difficult to detect and distinguish the pedestrian or cyclist from other objects in the surroundings, for example, when there is a group of pedestrians, cyclists or a large crowd
- There is an item similar in shape or appearance to a person
- The pedestrian or cyclist is below the sensor's viewing range
- The sensor can not identify the pedestrian's outline because of other items changing their profile, such as mobility assistance devices
- The radar sensor or camera is obstructed by a foreign object or debris
- Inclement weather such as heavy rain or snow obscures the field of view of the radar sensor or camera
- When light coming from a street light or an oncoming vehicle is reflected on a wet road surface such as a puddle in the road

ON ENG 5.qxp 3/18/2019 2:43 PM Page 81

- The field of view in front is obstructed by sun glare
- The windshield glass is fogged up; a clear view of the road is obstructed
- The adverse road conditions cause excessive vehicle vibrations while driving
- When the pedestrian or cyclist suddenly enters the path of travel of the vehicle
- When the cyclist in front is riding perpendicular to the direction of travel
- When there is any electromagnetic interference
- When the cyclist is near areas containing metal objects such as a construction zone, railroad, etc.
- If the bicycle material is not reflected well on the radar

⚠ WARNING

- **Do not use the Forward Collision avoidance Assist (FCA) system when towing a vehicle. Application of the FCA system while towing may adversely affect the safety of your vehicle or the towing vehicle.**
- **Use extreme caution when the vehicle in front of you has cargo that extends rearward from the cab, or when the vehicle in front of you has higher ground clearance.**
- **The FCA system is designed to detect and monitor the vehicle ahead or detect a pedestrian or cyclist (if equipped) in the roadway through radar signals and camera recognition. It may not always detect bicycles, motorcycles, or smaller wheeled objects such as luggage bags, shopping carts, or strollers.**

(Continued)

(Continued)

- **Never try to test the operation of the FCA system. Doing so may cause severe injury or death.**
- **If the front bumper, front glass, radar or camera have been replaced or repaired, have the vehicle inspected by a professional workshop. Kia recommends to visit an authorized Kia dealer/service partner.**

✻ NOTICE

In some instances, the FCA system may be cancelled when subjected to electromagnetic interference.

ON ENG 5.qxp 3/18/2019 2:43 PM Page 82

CRUISE CONTROL SYSTEM (IF EQUIPPED)

The cruise control system allows you to program the vehicle to maintain a constant speed without pressing the accelerator pedal.

This system is designed to function above approximately 30 km/h (20 mph).

⚠ WARNING

- **If the cruise control is left on, (cruise indicator light is illuminated), the cruise control can be switched on accidentally. Keep the cruise control system off when the cruise control is not in use, to avoid inadvertently setting a speed.**
- **Use the cruise control system only when traveling on open highways in good weather.**
- **Do not use the cruise control when it may not be safe to keep the vehicle at a constant speed, for instance, driving in heavy or varying traffic, or on slippery (rainy, icy or snow-covered) or winding roads or over 6% up-hill or down-hill roads.**
- **Pay particular attention to the driving conditions whenever using the cruise control system.**

(Continued)

(Continued)

- **Be careful when driving downhill using the cruise control system, which may increase the vehicle speed.**

✻ NOTICE

- **During normal cruise control operation, when the SET switch is activated or reactivated after applying the brakes, the cruise control will energize after approximately 3 seconds. This delay is normal.**
- **To activate cruise control, depress the brake pedal at least once after starting the engine. This is to check if the brake switch which is important part to cancel cruise control is in normal condition.**

ON ENG 5.qxp 3/18/2019 2:43 PM Page 83

Cruise control switch

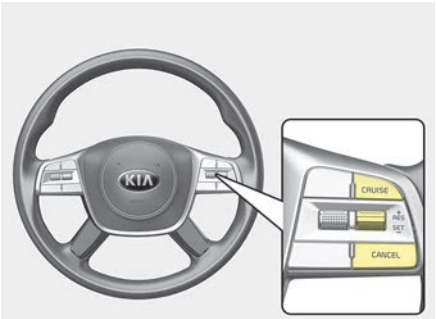

OON058028L

CANCEL : Cancels cruise control operation.

CRUISE : Turns cruise control system on or off.

RES+ : Resumes or increases cruise control speed.

SET- : Sets or decreases cruise control speed.

To set cruise control speed:

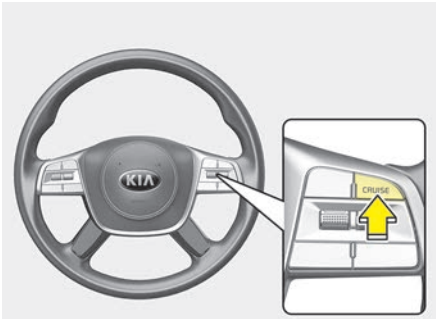

OON058029L

1. Press the CRUISE button on the steering wheel, to turn the system on. The cruise indicator light will illuminate.
2. Accelerate to the desired speed, which must be more than approximately 30 km/h (20 mph).

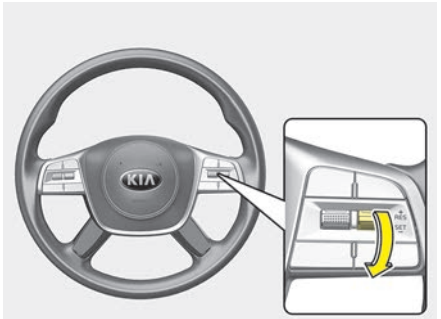

OON058030L

3. Move the lever down (to SET-), and release it at the desired speed. The cruise set indicator light will illuminate. Release the accelerator pedal at the same time. The desired speed will automatically be maintained.

On a steep grade, the vehicle may slow down or speed up slightly while going downhill.

ON ENG 5.qxp 3/18/2019 2:43 PM Page 84

To increase cruise control set speed:

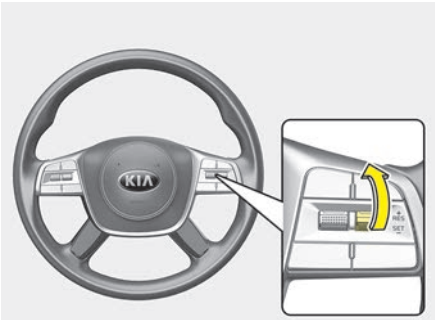

OON058031L

Follow either of these procedures:

- Move the lever up (to RES+) and hold it. Your vehicle will accelerate. Release the lever at the speed you want.
- Move the lever up (to RES+) and release it immediately. The cruising speed will increase by 2 km/h (1 mph) each time you move the lever up (to RES+) in this manner.

To decrease the cruising speed:

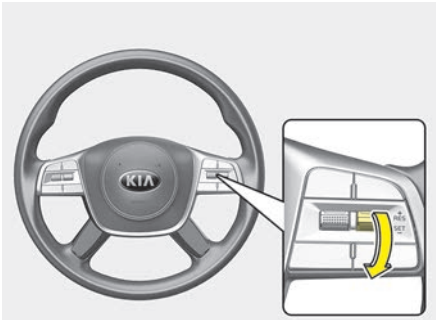

OON058030L

Follow either of these procedures:

- Move the lever down (to SET-) and hold it. Your vehicle will gradually slow down. Release the lever at the speed you want to maintain.
- Move the lever down (to SET-) and release it immediately. The cruising speed will decrease by 2 km/h (1 mph) each time you move the lever down (to SET-) in this manner.

To temporarily accelerate with the cruise control on:

If you want to speed up temporarily when the cruise control is on, depress the accelerator pedal. Increased speed will not interfere with cruise control operation or change the set speed.

To return to the set speed, take your foot off the accelerator pedal.

ON ENG 5.qxp 3/18/2019 2:43 PM Page 85

To cancel cruise control, do one of the following:

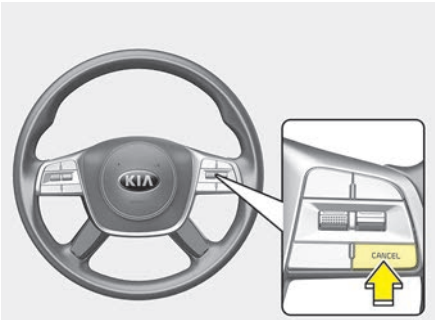

OON058032L

- Depress the brake pedal.
- Shift into N (Neutral).
- Press the CANCEL button located on the steering wheel.
- Decrease the vehicle speed lower than the memory speed by approximately 20 km/h (12 mph).
- Decrease the vehicle speed to less than approximately 25 km/h (15 mph).

Each of these actions will cancel cruise control operation (the cruise set *indicator light will go off), but it will not turn the system off. If you wish to resume control operation, move up the lever (to RES+) located on your steering wheel. You will return to your previously preset speed.*

To resume cruising speed at more than approximately 30 km/h (20 mph).

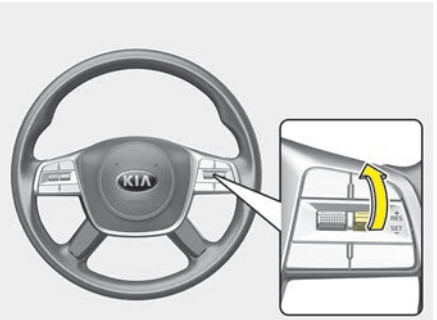

OON058031L

If any method other than the CRUISE button was used to cancel cruising speed and the system is still activated, the most recent set speed will automatically resume when the RES+ switch is pushed.

It will not resume, however, if the vehicle speed has dropped below approximately 30 km/h (20 mph).

ON ENG 5.qxp 3/18/2019 2:43 PM Page 86

To turn cruise control off, do one of the following:

- Press the CRUISE button (the cruise indicator light will be turn off).
- If your vehicle equipped the speed limit system, press the CRUISE button twice. (The cruise indicator light will turn off.)
- Turn the engine off.

Both of these actions cancel cruise control operation. If you want to resume cruise control operation, repeat the steps provided in "To set cruise control speed" on the previous page.

ON ENG 5.qxp 3/18/2019 2:43 PM Page 87

SMART CRUISE CONTROL WITH STOP & GO SYSTEM (IF EQUIPPED)

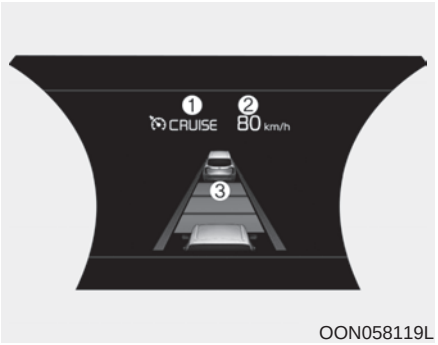

OON058119L

① Cruise indicator
② Set speed
③ Vehicle-to-vehicle distance

To see the SCC screen on the LCD display on the cluster, select Assist mode (). For more informations, refer to “LCD Display” in chapter 4.

The Smart Cruise Control system allows you to program the vehicle to maintain constant speed and minimum distance between the vehicle ahead.

The Smart Cruise Control system will automatically adjust your vehicle speed to maintain your programmed speed and following distance without requiring you to depress the accelerator or brake pedals.

⚠ WARNING

For your safety, please read the owner's manual before using the Smart Cruise Control system.

⚠ WARNING

The Smart Cruise Control system is not a substitute for safe driving practices, but a convenience function only. It is the responsibility of the driver to always check the speed and distance to the vehicle ahead.

⚠ WARNING

Take the following precautions :

- **Always set the vehicle speed under the speed limit in your country.**
- **If the Smart Cruise Control is left on, (CRUISE indicator light in the instrument cluster is illuminated) the Smart Cruise Control can be activated unintentionally. Keep the Smart Cruise Control system off (CRUISE indicator light OFF) when the Smart Cruise Control is not in use, to avoid inadvertently setting a speed.**
- **Use the Smart Cruise Control system only when traveling on open highways in good weather.**
- **Do not use the Smart Cruise Control when it may not be safe to keep the vehicle at a constant speed:**

(Continued)

ON ENG 5.qxp 3/18/2019 2:43 PM Page 88

(Continued)

- **When driving in heavy traffic or when traffic conditions make it difficult to drive at a constant speed**
- **When driving on rainy, icy, or snow-covered roads**
- **When driving on a steep downhill or uphill**
- **When driving in windy areas**
- **When driving in parking lots**
- **When driving near crash barriers**
- **When driving on a sharp curve**
- **When driving with limited view (possibly due to bad weather, such as fog, snow, rain or sandstorm)**
- **When the vehicle sensing ability decreases due to vehicle modification resulting level difference of the vehicle's front and rear**

(Continued)

(Continued)

- **Unexpected situations may lead to possible accidents. Pay attention continuously to road conditions and driving even when the smart cruise control system is being operated.**

To adjust the sensitivity of Smart Cruise Control

The sensitivity of vehicle speed when following the front vehicle to maintain the set distance can be adjusted. Go to the 'User Settings → Driver assistance → SCC response → Fast/Normal/Slow' on the LCD display. You may select one of the three stages you prefer.

- Fast:

  Vehicle speed following the front vehicle to maintain the set distance is faster than normal speed.
- Normal:

  Vehicle speed following the front vehicle to maintain the set distance is normal.
- Slow:

  Vehicle speed following the front vehicle to maintain the set distance is slower than normal speed.

✻ NOTICE

The last selected speed sensitivity of the smart cruise control is remained in the system.

ON ENG 5.qxp 3/18/2019 2:43 PM Page 89

To convert to Cruise Control mode



OON058090L



OON058091L

The driver may choose to only use the conventional Cruise Control mode (speed control function) by doing as follows:

1. Turn the Smart Cruise Control System on (the cruise indicator light will be on but the system will not be activated).
2. Push and hold the Vehicle-to-Vehicle Distance button for more than 2 seconds.
3. Choose between "Smart Cruise Control" and "Cruise Control".

When the system is canceled using the CRUISE button or the CRUISE button is used after the engine is turned on, the Smart Cruise Control mode will turn on.

⚠ WARNING

When using the Cruise Control mode, you must manually adjust the distance to other vehicles by depressing the brake pedal. The system does not automatically adjust the distance to vehicles in front of you.

Smart Cruise Control Switch

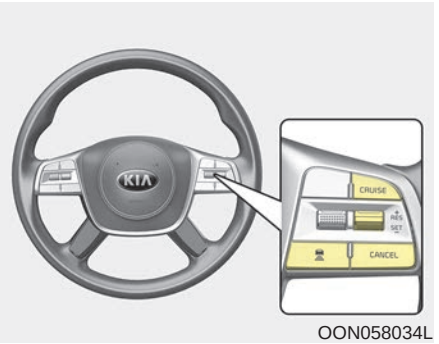

OON058034L

CRUISE : Turns cruise control system on or off.

RES+: Resumes or increases cruise control speed.

SET-: Sets or decreases cruise control speed.

: Sets vehicle-to-vehicle distance.

CANCEL : Cancels cruise control operation.

ON ENG 5.qxp 3/18/2019 2:43 PM Page 90

Smart Cruise Control speed

To set Smart Cruise Control speed

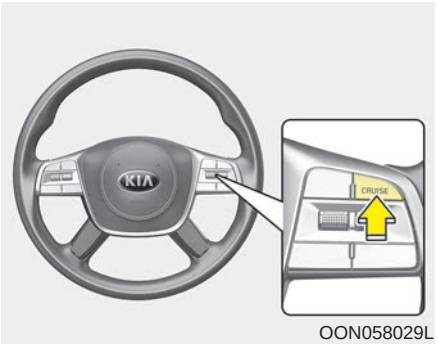

OON058029L

1. Push the CRUISE button on the steering wheel to turn the system on. The cruise indicator will illuminate.
2. Accelerate to the desired speed. The Smart Cruise Control speed can be set as follows:
   - 10 km/h (5 mph) ~ 170 km/h (110 mph) : when there is no vehicle in front
   - 0 km/h (0 mph) ~ 160 km/h (100 mph) : when there is a vehicle in front

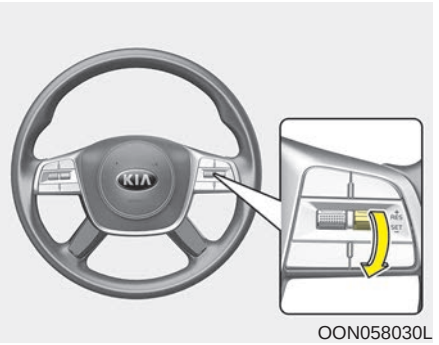

OON058030L

3. Push the toggle switch down (SET-), and release it at the desired speed. The Set Speed and Vehicle-to-Vehicle Distance on the LCD display will illuminate.
4. Release the accelerator pedal. The desired speed will automatically be maintained.

If there is a vehicle in front of you, the speed may decrease to maintain the distance to the vehicle ahead.

On a steep grade, the vehicle may slow down or speed up slightly while going uphill or downhill.

ON ENG 5.qxp 3/18/2019 2:43 PM Page 91

✻ NOTICE

Vehicle speed may decrease on an upward slope and increase on a downward slope.

⚠ CAUTION

- ***When vehicle speed is under 10 km/h (6 mph), the Smart Cruise Control is canceled. The driver must adjust the vehicle speed by depressing the accelerator or brake pedal according to the road condition ahead and driving condition.***
- ***The speed is set to 30 km/h (20 mph) when there is a preceding car in the front direction, and when it is set in the situation where the car is 0 ~ 30 km/h (20 mph).***

To increase Smart Cruise Control set speed

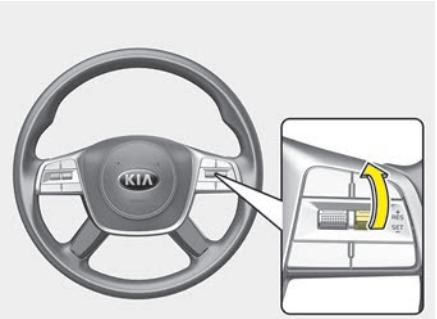

OON058031L

Follow either of these procedures:

- Push the toggle switch up (RES+), and hold it. Your vehicle set speed will increase by 10 km/h (5 mph). Release the toggle switch at the speed you want.
- Push the toggle switch up (RES+), and release it immediately. The cruising speed will increase by 1 km/h (1 mph) each time you move the toggle switch up in this manner.
- You can set the speed to 170 km/h (110 mph).

⚠ CAUTION

Check the driving condition before using the toggle switch. Driving speed sharply increases, when you push up and hold the toggle switch.

ON ENG 5.qxp 3/18/2019 2:43 PM Page 92

To decrease the Smart Cruise Control set speed

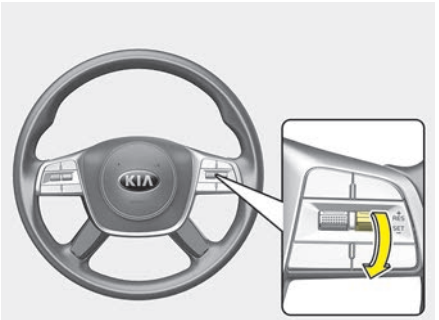

OON058030L

Follow either of these procedures:

- Push the toggle switch down (SET-), and hold it. Your vehicle set speed will decrease by 10 km/h (5 mph). Release the toggle switch at the speed you want.
- Push the toggle switch down (SET-), and release it immediately. The cruising speed will decrease by 1 km/h (1 mph) each time you move the toggle switch down in this manner.
- You can set the speed to 30 km/h (20 mph).

To temporarily accelerate with the Smart Cruise Control on

If you want to speed up temporarily when the Smart Cruise Control is on, depress the accelerator pedal. Increased speed will not interfere with Smart Cruise Control operation or change the set speed.

To return to the set speed, take your foot off the accelerator pedal.

If you push the toggle switch down (SET-) at increased speed, the cruising speed will be set again.

✻ NOTICE

Be careful when accelerating temporarily, because the speed is not controlled automatically at this time even if there is a vehicle in front of you.

Smart Cruise Control will be temporarily canceled when:

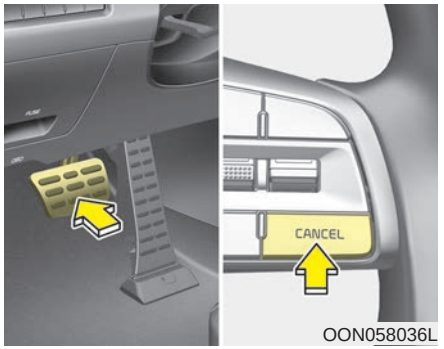

OON058036L

Cancelled manually

- Depressing the brake pedal.
- Pushing the CANCEL button located on the steering wheel.
- Depress the brake pedal and press the CANCEL button at the same time, when the vehicle is at a standstill.

The Smart Cruise Control turns off temporarily when the Set Speed and Vehicle-to-Vehicle Distance indicator on the LCD display turns off.

The cruise indicator is illuminated continuously.

ON ENG 5.qxp 3/18/2019 2:43 PM Page 93

Cancelled automatically

- The driver's door is opened.
- The vehicle is shifted to N (Neutral), R (Reverse) or P (Park).
- The parking brake is applied.
- The vehicle speed is over 190 km/h (120 mph).
- The ESC (Electronic Stability Control), TCS (Traction Control System) or ABS is operating.
- The ESC is turned off.
- The sensor or the cover is dirty or obscured by foreign matter.
- The vehicle is stopped for more than 5 minutes.
- The vehicle stops and goes repeatedly for a long period of time.
- The accelerator pedal is continuously depressed for more than one minute.
- The engine performance is abnormal.
- Engine rpm is in the red zone.
- The driver starts driving by pushing the toggle switch up (RES+)/down (SET-) or depressing the accelerator pedal, approximately after the vehicle is stopped by the Smart Cruise Control system with no other vehicle ahead.
- The driver starts driving by pushing the toggle switch up (RES+)/down (SET-) or depressing the accelerator pedal, approximately after stopping the vehicle with a vehicle stopped far away in front.
- The Forward Collision-Avoidance Assist (FCA) is activated.
- The engine speed is in dangerous range.

Each of these actions will cancel the Smart Cruise Control operation. The Set Speed and Vehicle-to-Vehicle Distance on the LCD display will go off.

In a condition the Smart Cruise Control is cancelled automatically, the Smart Cruise Control will not resume even though the RES+ or SET- toggle switch is pushed.

✻ NOTICE

If the Smart Cruise Control is cancelled by other than the reasons mentioned, have the system checked by a professional workshop. Kia recommends to visit an authorized Kia dealer/service partner.

ON ENG 5.qxp 3/18/2019 2:43 PM Page 94

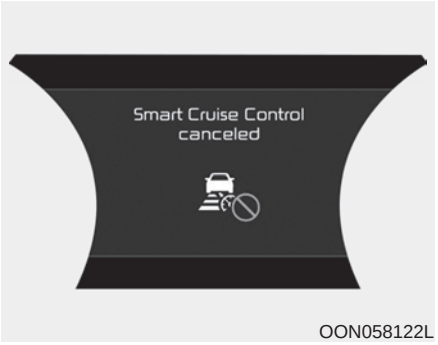

OON058122L

Smart Cruise Control cancelled

If the system is cancelled, the warning chime will sound and a message will appear for a few seconds.

You must adjust the vehicle speed by depressing the accelerator or brake pedal according to the road condition ahead and driving condition.

Always check the road conditions. Do not rely on the warning chime.

To resume Smart Cruise Control set speed

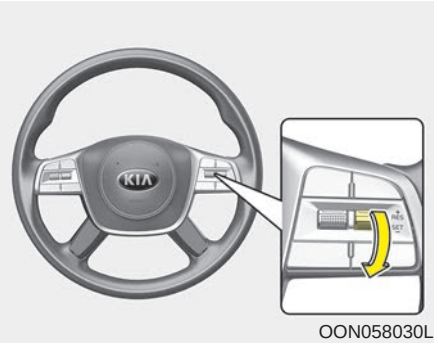

OON058030L

If any method other than the cruise toggle switch was used to cancel cruising speed and the system is still activated, the cruising speed will automatically resume when you push the toggle switch up (RES+) or down (SET-).

If you push the toggle switch up (RES+), the speed will resume to the recently set speed. However, if vehicle speed drops below 10 km/h (5 mph), it will resume when there is a vehicle in front of your vehicle.

✻ NOTICE

Always check the road conditions when you push the toggle switch up (RES+) to resume speed.

ON ENG 5.qxp 3/18/2019 2:44 PM Page 95

To turn Cruise Control off

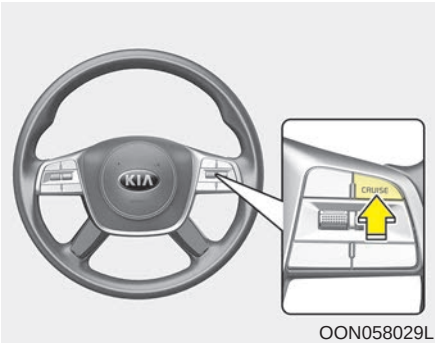

OON058029L

- Pushing the CRUISE button. The cruise indicator will go off.

  If you wish not to use the cruise control system, always turn the system off by pushing the CRUISE button.

Smart Cruise Control Vehicle-to-Vehicle Distance

To set Vehicle-to-Vehicle Distance

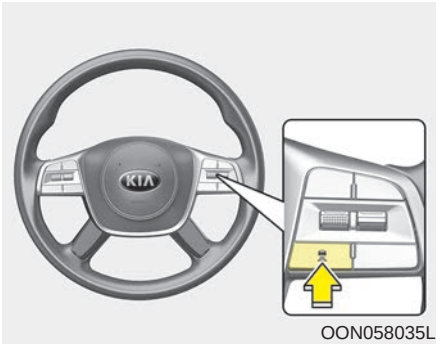

OON058035L

When the Smart Cruise Control system is ON, you can set and maintain the distance from the vehicle ahead of you without pressing the accelerator or brake pedal.

Each time the button is pressed, the vehicle to vehicle distance changes as follows:

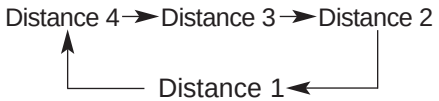

For example, if you drive at 90 km/h (56 mph), the distance maintain as follows:

Distance 4 - approximately 52.5 m
Distance 3 - approximately 40 m
Distance 2 - approximately 32.5 m
Distance 1 - approximately 25 m

✻ NOTICE

The distance is set to the last set distance when the system is used for the first time after starting the engine.

ON ENG 5.qxp 3/18/2019 2:44 PM Page 96

When the lane ahead is clear:

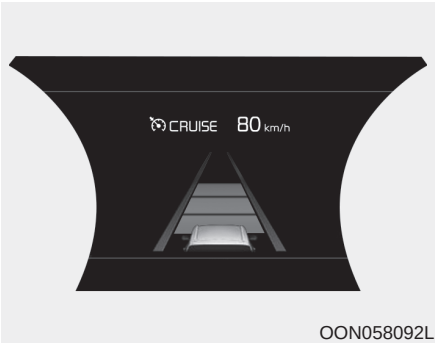

OON058092L

The vehicle speed will maintain the set speed.

When there is a vehicle ahead of you in your lane:

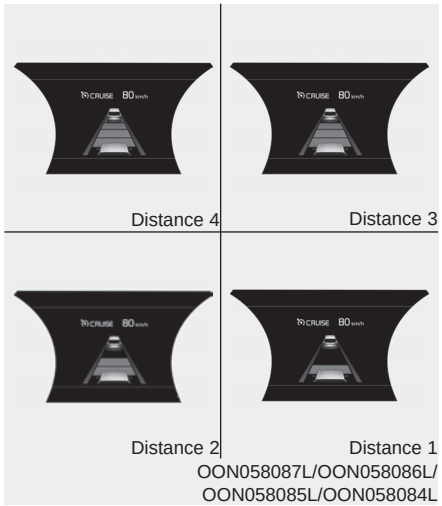

OON058087L/OON058086L/
OON058085L/OON058084L

- Your vehicle speed will slow down or speed up to maintain the selected distance. (A vehicle will appear in front of your vehicle in the LCD display only when there is an actual vehicle in front of you.)
- If the vehicle ahead speeds up, your vehicle will travel at a steady cruising speed after accelerating to the set speed.

ON ENG 5.qxp 3/18/2019 2:44 PM Page 97

⚠ WARNING



OON058079L

When using the Smart Cruise Control System:

- **The warning message appears and warning chime sounds if the vehicle is unable to maintain the selected distance from the vehicle ahead.**

(Continued)

(Continued)

- **If the warning message appears and warning chime sounds, depress the brake pedal to actively adjust the vehicle speed, and the distance to the vehicle ahead.**
- **Even if the warning message does not appear and warning chime does not sound, always pay attention to the driving conditions to prevent dangerous situations from occurring.**

⚠ CAUTION



OON058088L

If the vehicle ahead (vehicle speed: less than 30km/h) disappears to the next lane, the warning chime will sound and a message "Watch for surrounding vehicles" will appear. Adjust your vehicle speed for vehicles or objects that can suddenly appear in front of you by depressing the brake pedal.

Always pay attention to the road ahead.

ON ENG 5.qxp 3/18/2019 2:44 PM Page 98

In traffic situation



OON058121L

Use switch or pedal to accelerate

- In traffic, your vehicle will stop if the vehicle ahead of you stops. Also, if the vehicle ahead of you starts moving, your vehicle will start as well. However, if the vehicle stops for more than 3 seconds, you must depress the accelerator pedal or push up the toggle switch (RES+) or push down the toggle switch (SET-) to start driving.
- If you push the smart cruise control toggle switch (RES+ or SET-) while Auto Hold and advanced smart cruise control is operating the Auto Hold will be released regardless of accelerator pedal operation and the vehicle will start to move. The AUTO HOLD indicator changes from green to white. (if equipped with EPB (Electronic Parking Brake))

Sensor to detect distance to the vehicle ahead



OON058025L

The Smart Cruise Control uses a sensor to detect distance to the vehicle ahead.

If the sensor is covered with dirt or other foreign matter, the vehicle to vehicle distance control may not operate correctly.

Always keep the sensor clean.

ON ENG 5.qxp 3/18/2019 2:44 PM Page 99

Warning message

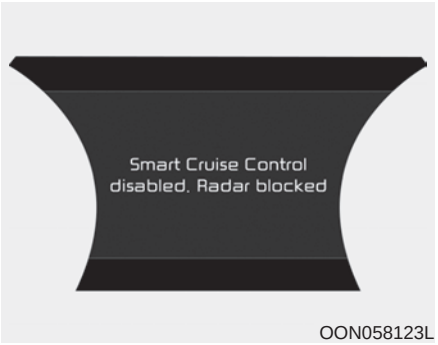

OON058123L

Smart Cruise Control disabled. Radar blocked

When the sensor lens cover is blocked with dirt, snow, or debris, the Smart Cruise Control system operation may stop temporarily. If this occurs, a warning message will appear on the LCD display. Remove any dirt, snow, or debris and clean the radar sensor lens cover before operating the Smart Cruise Control system.

The Smart Cruise Control system may not properly activate, if the radar is totally obstructed, or if any substance is not detected after turning ON the engine (e.g. in an open terrain).

⚠ CAUTION

- ***Do not apply license plate frame or foreign objects such as a bumper sticker or a bumper guard near the radar sensor. Doing so may adversely affect the sensing performance of the radar.***
- ***Always keep the radar sensor and lens cover clean and free of dirt and debris.***
- ***Use only a soft cloth to wash the vehicle. Do not spray pressurized water directly on the sensor or sensor cover.***

(Continued)

(Continued)

- ***Be careful not to apply unnecessary force on the radar sensor or sensor cover. If the sensor is forcibly moved out of proper alignment, the Smart Cruise Control system may not operate correctly. In this case, a warning message may not be displayed.***

  Have the vehicle inspected by a professional workshop. Kia recommends to visit an authorized Kia dealer/service partner.
- ***If the front bumper becomes damaged in the area around the radar sensor, the Smart Cruise Control system may not operate properly. Have the vehicle inspected by a professional workshop. Kia recommends to visit an authorized Kia dealer/service partner.***
- ***Use only a genuine Kia sensor cover for your vehicle. Do not paint anything on the sensor cover.***

ON ENG 5.qxp 3/18/2019 2:44 PM Page 100

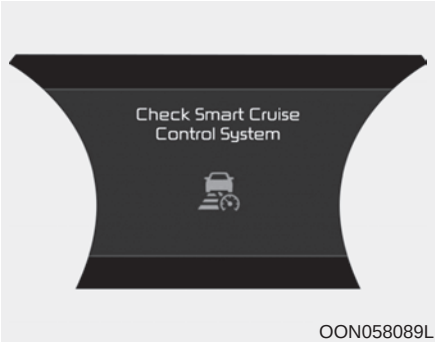

OON058089L

Check Smart Cruise Control System

The message will appear when the vehicle to vehicle distance control system is not functioning normally.

In this case, have the system checked by a professional workshop.

Kia recommends to visit an authorized Kia dealer/service partner.

Limitations of the system

The Smart Cruise Control system may have limits to its ability to detect distance to the vehicle ahead due to road and traffic conditions.

On curves

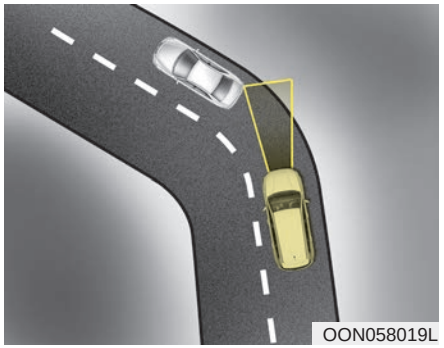

OON058019L

- The Smart Cruise Control system may not detect a moving vehicle in your lane, and then your vehicle could accelerate to the set speed. Also, the vehicle speed will decrease when the vehicle ahead is recognized suddenly.
- Select the appropriate set speed on curves and apply the brakes or accelerator pedal if necessary.

ON ENG 5.qxp 3/18/2019 2:44 PM Page 101

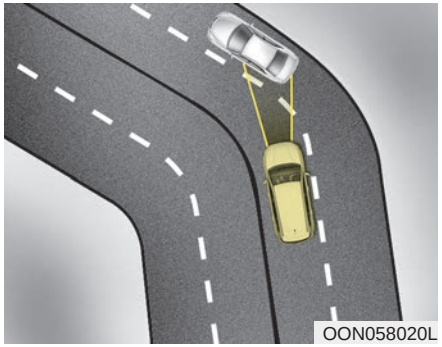
OON058020L

Your vehicle speed can be reduced due to a vehicle in the adjacent lane.

Apply the accelerator pedal and select the appropriate set speed. Check to be sure that the road conditions permit safe operation of the Smart Cruise Control.

On inclines

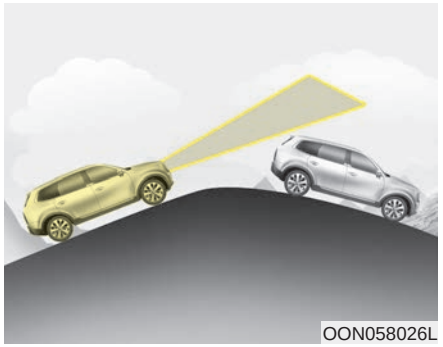
OON058026L

- During uphill or downhill driving, the Smart Cruise Control system may not detect a moving vehicle in your lane, and cause your vehicle to accelerate to the set speed. Also, the vehicle speed will rapidly decrease when the vehicle ahead is recognized suddenly.
- Select the appropriate set speed on inclines and apply the brake or accelerator pedal if necessary.

Lane changing

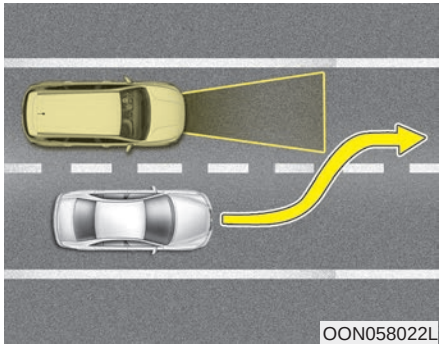
OON058022L

- A vehicle which moves into your lane from an adjacent lane cannot be recognized by the sensor until it is in the sensor's detection range.
- The radar may not detect immediately when a vehicle cuts in suddenly. Always pay attention to traffic, road and driving conditions.
- If a slower vehicle moves into your lane, your speed may decrease to maintain the distance to the vehicle ahead.
- If a faster vehicle which moves into your lane, your vehicle will accelerate to the set speed.

ON ENG 5.qxp 3/18/2019 2:44 PM Page 102

Vehicle recognition

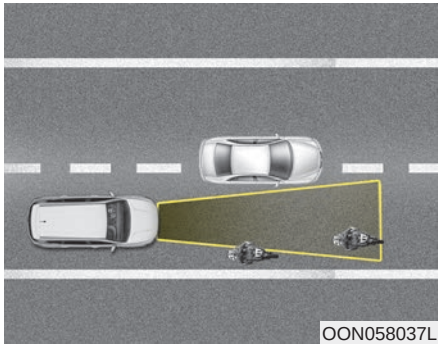

Some vehicles in your lane cannot be recognized by the sensor:

- Narrow vehicles such as motorcycles or bicycles
- Vehicles offset to one side
- Slow-moving vehicles or sudden-decelerating vehicles
- Stopped vehicles
- Vehicles with small rear profile such as trailers with no loads

A vehicle ahead cannot be recognized correctly by the sensor if any of following occurs:

- When the vehicle is pointing upwards due to overloading in the luggage compartment
- While the steering wheel is operating
- When driving to one side of the lane
- When driving on narrow lanes or on curves

Apply the brake or accelerator pedal if necessary.

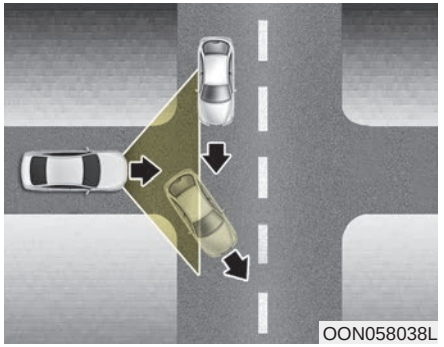

- Your vehicle may accelerate when a vehicle ahead of you disappears.
- When you are warned that the vehicle ahead of you is not detected, drive with caution.

ON ENG 5.qxp 3/18/2019 2:44 PM Page 103

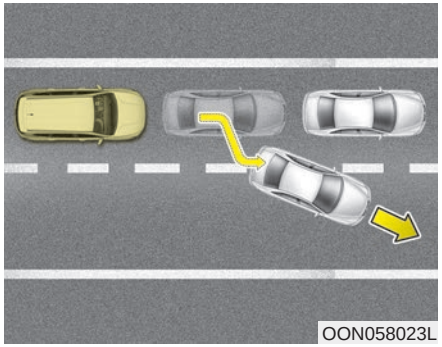
OON058023L

- When driving in stop-and-go traffic, and a stopped vehicle in front of you merges out of the lane, the system may not immediately detect the new vehicle that is now in front of you. In this case, you must maintain a safe braking distance, and if necessary, depress the brake pedal to reduce your driving speed in order to maintain a safe distance.

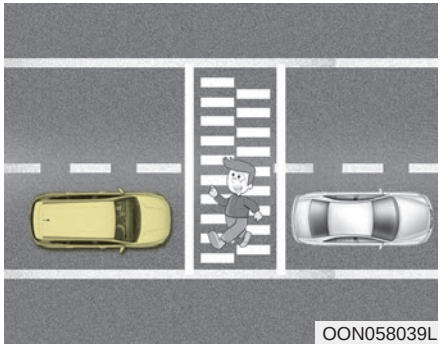
OON058039L

- Always look out for pedestrians when your vehicle is maintaining a distance with the vehicle ahead.

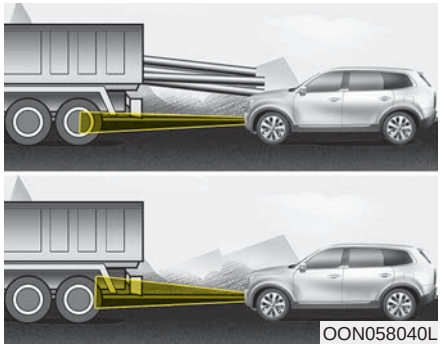
OON058040L

- Always be cautious for vehicles with higher height or vehicles carrying loads that sticks out from the back of the vehicle.

ON ENG 5.qxp 3/18/2019 2:44 PM Page 104

⚠ WARNING

When using the Smart Cruise Control take the following precautions:

- **If an emergency stop is necessary, you must apply the brakes. The vehicle cannot be stopped at every emergency situation by using the Smart Cruise Control system.**
- **Keep a safe distance according to road conditions and vehicle speed. If the vehicle to vehicle distance is too close during a high-speed driving, a serious collision may result.**
- **Always maintain sufficient braking distance and decelerate your vehicle by applying the brakes if necessary.**
- **The Smart Cruise Control system cannot recognize a stopped vehicle, pedestrians or an oncoming vehicle. Always look ahead cautiously to prevent unexpected and sudden situations from occurring.**

(Continued)

(Continued)

- **Vehicles moving in front of you with a frequent lane change may cause a delay in the system's reaction or may cause the system to react to a vehicle actually in an adjacent lane. Always drive cautiously to prevent unexpected and sudden situations from occurring.**
- **Always be aware of the selected speed and vehicle to vehicle distance. The driver should not solely rely on the system but always pay attention to driving conditions and control your vehicle speed.**
- **The Smart Cruise Control system may not recognize complex driving situations so always pay attention to driving conditions and control your vehicle speed.**
- **Do not use smart cruise control when towing a trailer.**

✻ NOTICE

The Smart Cruise Control system may not operate temporarily due to:

- **Electrical interference**
- **Modifying the suspension**
- **Differences of tire abrasion or tire pressure**
- **Installing different type of tires**

ON ENG 5.qxp 3/18/2019 2:44 PM Page 105

LEADING VEHICLE DEPARTURE ALERT (IF EQUIPPED)

The Leading Vehicle Departure Alert system alerts the driver of the departure of the vehicle in front when the vehicle is stopped and the Smart Cruise Control (SCC) system is in activation.

System setting and operating conditions

System setting

With the engine ON, the Leading Vehicle Departure Alert system turns on and gets ready to be activated when the 'User Settings → Driver Assistance → Driving assist → Leading vehicle departure alert' is selected on the cluster. The system stops operation when the setting is deactivated. However, if the engine is turned off then on again, the system maintains the previous state.

Operating conditions



OON058121L

While the Smart Cruise Control (SCC) system is in operation, your vehicle stops behind the vehicle in front when it stops. The message is displayed on the cluster within 3 seconds after the stop and the system will be in the standby position.

ON ENG 5.qxp 3/18/2019 2:44 PM Page 106

System activation



OON058124L

If the driver does not take action for a certain period of time after the vehicle in front departs, the message is displayed on the cluster.

The vehicle departs automatically if the accelerator pedal is depressed or [RES +] or [SET -] switch is activated when there is a vehicle in front.

The Smart Cruise Control (SCC) system is deactivated if the accelerator pedal is depressed or [RES +] or [SET -] switch is activated when there is no vehicle in front.

⚠ WARNING

Always check the front of the vehicle and road conditions before departure.

ON ENG 5.qxp 3/18/2019 2:44 PM Page 107

LANE FOLLOWING ASSIST (LFA) SYSTEM (IF EQUIPPED)

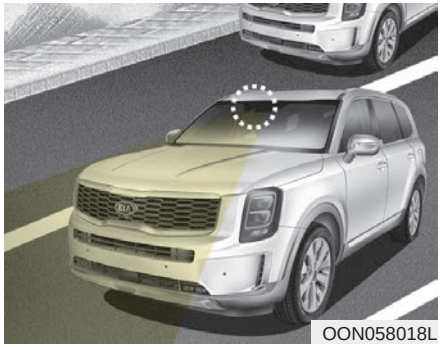

OON058018L

With the front camera mounted on the top of the windshield, the Lane Following Assist system is designed to ensure the vehicle stays in its lane by monitoring the lane ahead of the car and controlling over the direction of the steering wheel.

* LFA stands for Lane Following Assist.

⚠ WARNING

- **It is the driver's responsibility to operate the steering wheel for safe driving.**
- **Do not turn the steering wheel hastily if LFA is in work.**
- **The LFA system assists the steering wheel control over the direction so that the vehicle can stay in the center of the lane. The LFA system does not automatically control the steering wheel of at all times, which means the driver must not hands off the wheel while driving.**
- **When using the LFA system, always be aware of your surroundings and road conditions that may interrupt or stop the LFA system.**

⚠ CAUTION

- ***Do not attach glass tinting, stickers, accessories to the windshield where the front camera near the indoor mirror is placed.***
- ***The removal or re-assembly of the front camera to attach tinting, stickers, accessories may require the LFA system to be thoroughly inspected and modified. In such case, have the system inspected by a professional workshop. Kia recommends to visit an authorized Kia dealer/service partner.***
- ***Inspection or modification may be required when replacing parts related to the windshield or front camera, steering. Have the system inspected by a professional workshop. Kia recommends to visit an authorized Kia dealer/service partner.***

(Continued)

ON ENG 5.qxp 3/18/2019 2:44 PM Page 108

(Continued)

- ***Depending on your surroundings and road conditions, the LFA system could fail to recognize the lane and stop working. In turn, extra caution is required while driving with the LFA system on.***
- ***Be sure to check the non-operating conditions and cautions for the driver before using the LFA system.***
- ***Do not place reflective materials such as white paper or mirror on the crash pad. Sunlight reflections can cause a malfunction in the LFA system.***
- ***Too big sound from the sound system can interrupt the alarming sound from the LFA system.***

(Continued)

(Continued)

- ***Keeping your hands off the wheel while driving will trigger the hands-off warning and deactivate the steering-assist system.***
- ***When driving at a high speed, the steering assist force can become weak and the vehicle can drive out of its lane. Extra caution is required, and comply with the speed limit.***
- ***Attaching an object to the steering wheel could deter steering assistance.***
- ***Attaching an object to the steering wheel could deter the hands-off alarming system.***

LFA operation

The driver can turn on the LFA system with the Engine Start/Stop button in the ON position and by selecting "User Settings → Driver assistance → Driving assist → LFA (Lane Following Assist)“ in the User Settings of the LCD modes.

The set-up of the LFA system will be maintained, as selected, when the vehicle is restarted.

ON ENG 5.qxp 3/18/2019 2:45 PM Page 109

Operating conditions

The system is activated when the Lane Following Assist is selected from the User Setting mode when the following conditions are satisfied:

- The Smart Cruise Control is in activation (vehicle deceleration and acceleration)
- Vehicle speed is lower than 180 km/h (110 mph)

When the system is activated, the indicator (🚗) on the cluster will illuminate. The color of the indicator will change depending on the condition of LFA system.

- Green : The system is in the assist state.
- White : The system is in the ready state.

LFA activation

- After LFA is activated, if the vehicle is within the lane an both lane markers are detected (lane color changes grey to white) and there is no abrupt steering by the driver, (🚗) indicator light will change from white to green. This indicates that the LFA system is in the ASSIST state and the steering wheel will be able to be controlled.
- When the system does not recognize the lane or depending on the vehicle condition in front (presence of the vehicle, driving status, etc.), the steering wheel is controlled restrictively.

When the control of the steering wheel is stopped temporarily the activation indicator blinks in green and then changes to white.

Warning message



OON058093L

Keep hands on steering wheel

If the driver takes their hands off from the steering wheel for certain time while the LFA system is activated, the system will warn the driver.

ON ENG 5.qxp 3/18/2019 2:45 PM Page 110

✻ NOTICE

If the steering wheel is held very lightly the message may still appear because the LFA system may not recognize that the driver has their hands on the wheel.

⚠ WARNING

The warning message may appear late according to road conditions. Therefore, always have your hands on the steering wheel while driving.



OON058131L

Driver's grasp not detected.
LFA system is disabled temporarily

If the driver still does not have their hands on the steering wheel after the message "Keep hands on steering wheel", the system will not control the steering wheel and warn the driver only when the driver crosses the lane markers.

However, if the driver has their hands on the steering wheel again, the system will start controlling the steering wheel.

⚠ WARNING

- **The driver is responsible for accurate steering.**
- **Turn off the system and drive the vehicle in following situation.**
  - **In bad weather**
  - **In bad road condition**
  - **When the steering wheel needs to be controlled by the driver frequently.**

✻ NOTICE

- **Even though the steering is assisted by the system, the driver may control the steering wheel.**
- **The steering wheel may feel heavier when the steering wheel is assisted by the system than when it is not.**

ON ENG 5.qxp 3/18/2019 2:45 PM Page 111

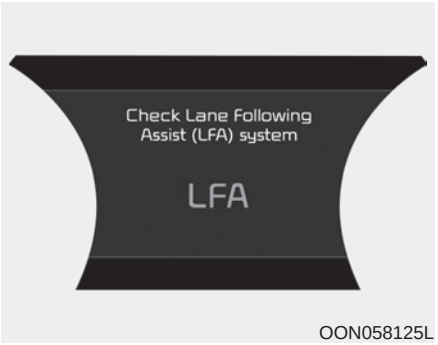

OON058125L

Check LFA (Lane Following Assist) system

If there is a problem with the system, a message will appear for a few seconds. In such case, have the system inspected by a professional workshop. Kia recommends to visit an authorized Kia dealer/service partner.

The LFA system will not be in the ASSIST state when:

- The turn signal is turned on before changing a lane. If you change lanes without the turn signal on, the steering wheel might be controlled.
- The vehicle is not driven in the middle of the lane when the system is turned on or right after changing a lane.
- ESC (Electronic Stability Control) or VSM (Vehicle Stability Management) is activated.
- The vehicle is driven on a sharp curve with high speed.
- Vehicle speed is over 145 km/h (for Middle East) / 175 km/h (except Middle East).
- The vehicle makes sharp lane changes.
- Only one lane marker is detected.
- The lane is very wide or narrow.
- Radius of a curve is too small.
- The vehicle is driven on a steep incline.
- The steering wheel is turned suddenly.

Limitations of the system

The LFA system may operate prematurely even if the vehicle does not depart from the intended lane, OR, the LFA system may not assist your steering if the vehicle leaves the intended lane under the following circumstances:

ON ENG 5.qxp 3/18/2019 2:45 PM Page 112

When the lane and road conditions are poor

- It is difficult to distinguish the lane marking from the road surface of the lane marking is faded or not clearly marked.
- It is difficult to distinguish the color of the lane marker from the road.
- There are markings on the road surface that look like a lane marker that is inadvertently being detected by the camera.
- The lane marker is indistinct or damaged.
- The lane marker is merged or divided. (e.g. tollgate)
- The lane number increases or decreases or the lane marker are crossing complicatedly.
- There are more than two lane markers on the road in front of you.
- Then lane marker is very thick of thin.
- The lane marker ahead is not visible due to rain, snow, water on the road, damaged or stained road surface, or other factors.
- The shadow is on the lane marker by a median strip, trees, guardrail, noise barriers, etc.
- The lane markers are complicated or a structure substitutes for the lines such as a construction area.
- There are crosswalk sign or other symbols on the road.
- The lane suddenly disappears such as at the intersection.

When external condition is intervened

- The brightness outside changes suddenly such as when entering or exiting a tunnel, or when passing under a bridge.
- The brightness outside is too low such as when the headlamps are not on at night or the vehicle is going through a tunnel.
- There is a boundary structure in the roadway such as a concrete barrier, guardrail and reflector post that is inadvertently being detected by the camera.
- When light coming from a street light or an oncoming vehicle is reflected on a wet road surface such as a puddle in the road.
- The field of view in front is obstructed by sun glare.

ON ENG 5.qxp 3/18/2019 2:45 PM Page 113

- There is not enough distance between you and the vehicle in front to be able to detect the lane marker or the vehicle ahead is driving on the lane marker.
- Driving on a steep grade, over a hill, or when driving on a curved road.
- The adverse road conditions cause excessive vehicle vibrations while driving.
- The surrounding of the inside rear view mirror temperature is high due to direct sunlight, etc.

When front visibility is poor

- The windshield or the camera lens is blocked with dirt or debris.
- The windshield glass is fogged up; a clear view of the road is obstructed.
- Placing objects on the dashboard, etc.
- The sensor cannot detect the lane because of fog, heavy rain or snow.

ON ENG 5.qxp 3/18/2019 2:45 PM Page 114

LANE KEEPING ASSIST (LKA) SYSTEM (IF EQUIPPED)

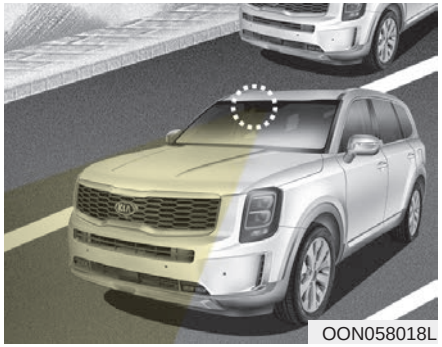
OON058018L

The Lane Keeping Assist System detects the lane markers on the road with a front view camera at the front windshield, and assists the driver's steering to help keep the vehicle in the lanes.

When the system detects the vehicle straying from its lane, it alerts the driver with a visual and audible warning, while applying a counter-steering torque, trying to prevent the vehicle from moving out of its lane.

⚠ WARNING

- **Driver is responsible for being aware of surroundings and steering the vehicle for safe driving practices.**
- **Do not steer the steering wheel suddenly when the steering wheel is being assisted by the system.**
- **LKA helps prevent the driver from moving out of the lane unintentionally by assisting the driver's steering. However, the system is just a convenience function and the steering wheel is not always controlled. While driving, the driver should pay attention to the steering wheel.**

(Continued)

(Continued)

- **The operation of the LKA can be cancelled or not work properly according to road condition and surroundings. Always be cautious when driving.**
- **Do not disassemble a front view camera temporarily for tinted window or attaching any types of coatings and accessories. If you disassemble the camera and assemble it again, have the system checked by a professional workshop. Kia recommends to visit an authorized Kia dealer/service partner and have the system checked to need a calibration.**

(Continued)

ON ENG 5.qxp 3/18/2019 2:45 PM Page 115

(Continued)

- **When you replace the windshield glass, front view camera or related parts of the steering, have the system checked by a professional workshop. Kia recommends to visit an authorized Kia dealer/service partner and have the system checked to need a calibration.**
- **The system detects lane markers. And controls the steering wheel by a front view camera, therefore, if the lane markers are hard to detect, the system may not work properly. Always be cautious when using the system.**
- **When the lane markers are hard to detect, please refer to "Driver's Attention".**
- **Do not remove or damage the related parts of LKA.**

(Continued)

(Continued)

- **Do not place objects on the crash pad that reflects light such as mirrors, white paper, etc. it may cause malfunction of LKA if the sunlight is reflected.**
- **You may not hear warning sound of LKA because of the excessive audio sound.**
- **While other beeps such as the seat belt warning sound are in operation and override the LKA alarming system, LKA beeps may not occur.**
- **If the vehicle speed is high, steering torque for assistance will not be enough to keep your vehicle within the lane. If so, the vehicle may move out of its lane. Obey speed limit when using LKA.**

(Continued)

(Continued)

- **If you attach objects to the steering wheel, the system may not assist steering.**
- **If you attach objects to the steering wheel, hands off alarm may not work properly.**

ON ENG 5.qxp 3/18/2019 2:45 PM Page 116

LKA operation

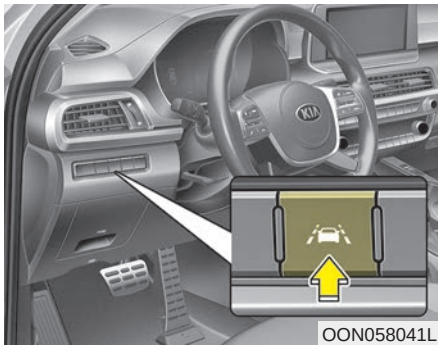

To activate/deactivate the LKA (For Middle East) :

With the Engine Start/Stop button in the ON position, press the LKA button located on the instrument panel on the lower left hand side of the driver.

The indicator (🚗) in the cluster display will initially illuminate white.

When the indicator (white) activated in the previous ignition cycle, the system turns on without any control.

If you press the LKA button again, the indicator on the cluster display will go off.

To activate/deactivate the LKA (Except Middle East) :

With the Engine Start/Stop button in the ON position, LKA turns on automatically. The indicator (🚗) in the cluster display will initially illuminate white. If you press the LKA button located on the instrument panel on the lower left hand side of the driver, LKA will be turned off and the indicator on the cluster display will go off.

The color of indicator will change depend on the condition of LKA.

- White : Sensor does not detect the lane marker or vehicle speed is less than 60 km/h (37 mph).
- Green : Sensor detects the lane marker and system is able to control the steering.

LKA activation

- To see the LKA system screen on the LCD display in the cluster, select ASSIST mode (🚗). For more details, refer to "LCD Display" in chapter 4.
- After LKA is activated, if both lane markers are detected, vehicle speed is over 60 km/h (37 mph) and all the activation conditions are satisfied, a green steering wheel indicator will illuminate and the steering wheel will be controlled.

⚠ WARNING

The Lane Keeping Assist System is a system to help prevent the driver from leaving the lane. However, the driver should not solely rely on the system but always check the road conditions when driving.

ON ENG 5.qxp 3/18/2019 2:45 PM Page 117

■ Lane marker undetected ■ Lane marker detected

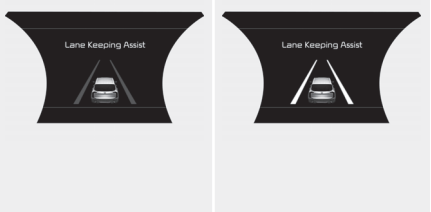

OON058094L/OON058097L

If the speed of the vehicle is over 60 km/h (37 mph) and the system detects lane markers, the color changes from gray to white.

Warning

■ Left lane marker ■ Right lane marker

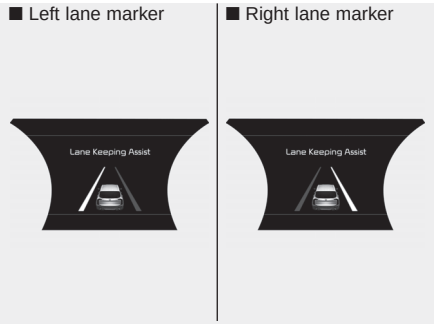

OON058096L/OON058095L

If the vehicle leaves a lane, the lane marker you cross will blink on the LCD display and the warning sound is provided.

If all the conditions to activate LKA is not satisfied, the system will convert to LDW (Lane Departure Warning) and warn the driver only when the driver crosses the lane lines.

■ Lane Keeping Assist is enabled



OON058097L

When the conditions below are met, LKA will be enable to assist steering.

- Vehicle speed is above 60 km/h (37 mph).
- Both lane markers are detected by LKA.
- The vehicle is between the lane markers.

If LKA can assist steering, a green steering wheel indicator will illuminate.

If the vehicle moves out its lane because steering torque for assistance is not enough, the line indicator of deviation direction will blink and the warning sound is provided.

ON ENG 5.qxp 3/18/2019 2:45 PM Page 118



OON058093L

Keep hands on steering wheel (When LKA is activated)

If the driver takes their hands off the steering wheel for several seconds while the LKA system is activated, the system will warn the driver.

⚠ WARNING

- **The warning message may appear late according to road conditions. Therefore, always have your hands on the steering wheel while driving.**
- **If you hold the steering wheel lightly, the system would generate hands off warning because LKA can treat the situation as you do not grab the wheel.**

Warning light and message

Check LKA system



OON058099L

LKA system failure indicator

The LKA system failure indicator (yellow) will illuminate if the LKA system is not working properly. Have the system checked by a professional workshop. Kia recommends to visit an authorized Kia dealer/service partner.

ON ENG 5.qxp 3/18/2019 2:45 PM Page 119

⚠ WARNING

- **The driver is responsible for accurate steering.**
- **Even though the steering is assisted by the system, the driver may control the steering wheel.**
- **Turn off the system and drive the vehicle in below situations.**
  - **In bad weather**
  - **In bad road condition**
  - **When the steering wheel needs to be controlled by the driver frequently.**
  - **When towing a vehicle or trailer.**
- **The steering wheel may feel heavier when the steering wheel is assisted by the system than when it is not.**

The system will be cancelled when:

- You change lanes with the turn signal.
  - Using the turn signal to change lanes.
  - If you change lanes without the turn signal on, the steering wheel might be controlled.
- LKA can transit to steering assist mode when the car is near to middle of the lane after system on or the lane was changed. LKA can not assist steering if the vehicle follows lane marker too close continuously before transition to steering assist mode.
- The control of ESC (Electronic Stability Control) or VSM (Vehicle Stability Management) is activated.
- The steering will not be assisted when your drive fast on a sharp curve.
- The steering will not be assisted when vehicle speed is below 60 km/h (37 mph) and over 180 km/h (112 mph).
- The steering will not be assisted when you change lanes fast.
- The steering will not be assisted when you brake suddenly.
- The steering will not be assisted when the lane is very wide or narrow.
- The steering will not be assisted when only one side lane marker is detected.
- There are more than two lane markers such as a construction area.
- Radius of a curve is too small.
- When you turn steering wheel suddenly, the LKA will be disabled temporarily.
- Driving on a steep slope or hill.

ON ENG 5.qxp 3/18/2019 2:45 PM Page 120

Driver's attention

The driver must be cautious in the below situations may not work properly when recognition of the lane marker is poor or limited :

▶ ***When lane and road condition is poor***

- It is difficult to distinguish the lane marker from road when the lane marker is covered with dust or sand.
- It is difficult to distinguish the color of the lane marker from road.
- There is something looks like a lane marker.
- The lane marker is indistinct or damaged.
- The number of lanes increases/ decreases or the lane lines are crossing (Driving through a toll plaza/toll gate, merged/divided lane).
- There are more than two lane markers.
- The lane marker is very thick or thin.
- The lane marker is not visible due to snow, rain, stain, a puddle or other factors.
- A shadow is on the lane marker because of a median strip, guardrail, noise barriers and others.
- When the lane markers are complicated or a structure substitutes for the lines such as a construction area.
- There are crosswalk signs or other symbols on the road.
- The lane suddenly disappears such as at the intersection.
- The lane marker in a tunnel is covered with dirt or oil and etc.
- The lane is very wide or narrow.

ON ENG 5.qxp 3/18/2019 2:45 PM Page 121

▶ ***When external condition is intervened***

- The brightness of outside changes suddenly when entering/existing a tunnel or passing under a bridge.
- The headlamps are not on at night or in a tunnel, or light level is low.
- There is a boundary structure in the roadway.
- The light of street, sun, oncoming vehicle and so on reflects from the water on the road.
- When light shines brightly in the reverse direction you drive.
- Road surface is not evenness.
- The distance from the vehicle ahead is very short or the vehicle ahead drives hiding the lane line.
- You drive on a steep grade or a sharp curve.
- The vehicle vibrates heavily.
- The temperature near inside mirror is very high due to direct sun light and etc.

▶ ***When front visibility is poor***

- The lens or windshield is covered by strange materials.
- The sensor cannot detect the lane because of fog, heavy rain or snow.
- The windshield is fogged by humid air in the vehicle.
- Putting something on the crash pad and etc.

⚠ WARNING

The Lane Keeping Assist System is a system to help prevent the driver from leaving the lane. However, the driver should not solely rely on the system but always take the necessary actions for safe driving practices.

LKA system function change

The driver can change LKA to the Lane Departure Warning (LDW) system or change the LKA system mode from the LCD display. Go to the "User Settings → Driver Assistance → Lane Safety → Lane Keeping Assist (LKA)/Lane Departure Warning (LDW)/Off".

Lane Keeping Assist (LKA)

This mode guides the driver to help keep the vehicle within the lanes. It rarely controls the steering wheel, when the vehicle drives well inside the lanes. However, it starts to control the steering wheel, when the vehicle is about to deviate out of the lane.

ON ENG 5.qxp 3/18/2019 2:45 PM Page 122

Lane Departure Warning (LDW)

LDW alerts the driver with a visual and acoustic warning when the system detects the vehicle leaving the lane. In this mode, the steering wheel will not be controlled. When the vehicle's front wheel contacts the inside edge of lane line, LKA issues the lane departure warning.

Off

If you select "Off", the LKA system is deactivated.

ON ENG 5.qxp 3/18/2019 2:45 PM Page 123

DRIVER ATTENTION WARNING (DAW) SYSTEM (IF EQUIPPED)

The Driver Attention Warning (DAW) system displays the condition of the driver's fatigue level and inattentive.

System setting and activation

System setting

- To turn ON the Driver Attention Warning (DAW) system, turn on the engine, and then select "User Settings → Driver Assistance → Driver Attention Warning" on the LCD display.
- The set-up of the Driver Attention Warning (DAW) system will be maintained, as selected, when the engine is re-started.

Display of the driver's attention level



OON058101L

ON ENG 5.qxp 3/18/2019 2:45 PM Page 124

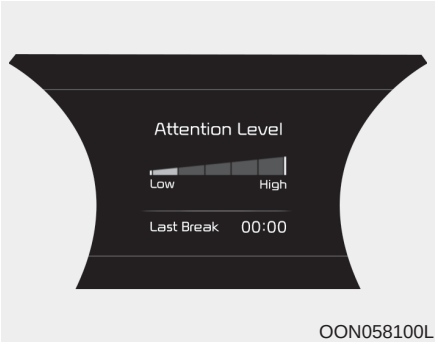

OON058100L

- The driver can monitor their driving conditions on the LCD display.

  The DAW screen will appear when you select the ASSIST mode tab ( ) on the LCD display if the system is activated. **(For more details, refer to "LCD Display" in chapter 4.)**
- The driver's attention level is displayed on the scale of 1 to 5. The lower the level is, the more inattentive the driver is.
- The level decreases when the driver does not take a break for a certain period of time.
- The level increases when the driver attentively drives for a certain period of time.
- When the driver turns on the system while driving, it displays 'Last Break time' and level reflected that.

Take a break



OON058102L

- The "Consider taking a break" message appears on the LCD display and a warning sounds in order to suggest the driver to take a break, when the driver's attention level is below 1.
- The Driver Attention Warning (DAW) system does not suggest the driver to take a break, when the total driving time is shorter than 10 minutes.

ON ENG 5.qxp 3/18/2019 2:45 PM Page 125

⚠ CAUTION

While other beeps such as the seat belt warning sound are in operation and override the DAW alarming system, DAW beeps may not occur.

Resetting the system

- The last break time is set to 00:00 and the driver's attention level is set to 5 (very attentive) when the driver resets the Driver Attention Warning (DAW) system.
- The Driver Attention Warning (DAW) system resets in the following situations.
  - The engine is turned OFF.
  - The driver unfastens the seat belt and then opens the driver's door.
  - The vehicle is stopped for more than 10 minutes.
- The Driver Attention Warning (DAW) system operates again, when the driver restarts driving.

System standby

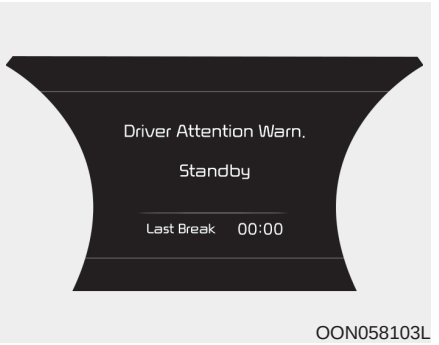

OON058103L

The Driver Attention Warning (DAW) system enters the ready status and displays the 'Standby' screen in the following situations.

- The camera sensor keeps failing to detect the lanes.
- Driving speed remains under 60 km/h (37 mph) or over 180 km/h (112 mph).

ON ENG 5.qxp 3/18/2019 2:45 PM Page 126

System malfunction



OON058104L

Check Driver Attention Warning (DAW) system

When the "Check Driver Attention Warning (DAW) system" warning message appears, the system is not working properly. In this case, have the vehicle inspected by a professional workshop. Kia recommends to visit an authorized Kia dealer/service partner.

⚠ WARNING

- **The Driver Attention Warning (DAW) system is not a substitute for safe driving practices, but a convenience function only. It is the responsibility of the driver to always drive cautiously to prevent unexpected and sudden situations from occurring. Pay attention to the road conditions at all times.**
- **The system may suggest a break according to the driver's driving pattern or habits even if the driver doesn't feel fatigue.**
- **The driver, who feels fatigued, should take a break, even though there is no break suggestion by the Driver Attention Warning (DAW) system.**

✻ NOTICE

The Driver Attention Warning (DAW) system utilizes the camera sensor on the front windshield for its operation. To keep the camera sensor in the best condition, you should observe the followings:

- **Do not disassemble camera temporarily for tinted window or attaching any types of coatings and accessories. If you disassemble a camera and assemble it again, have the system checked by a professional workshop. Kia recommends to visit an authorized Kia dealer/service partner and have the system checked to need a calibration.**
- **Do not locate any reflective objects (i.e. white paper, mirror) over the dashboard. Any light reflection may cause a malfunction of the Driver Attention Warning (DAW) system.**

(Continued)

ON ENG 5.qxp 3/18/2019 2:45 PM Page 127

(Continued)

- **Pay extreme caution to keep the camera sensor out of water.**
- **Do not arbitrarily disassemble the camera assembly, nor apply any impact on the camera assembly.**
- **Playing the vehicle audio system at high volume may offset the Driver Attention Warning system warning sounds.**

⚠ CAUTION

The Driver Attention Warning (DAW) system may not properly operate with limited alerting in the following situations:

- ***Not properly recognize lane. (For more information, refer to "Lane Keeping Assist (LKA) system" in this chapter.)***
- ***Rough or intentionally evasive driving (road construction, nearby vehicles, falling object, bump in the road, etc.).***
- ***When the driving performance of the vehicle deteriorates (Large tire pressure deviation, uneven wear, poor wheel alignment, etc.).***
- ***Severe winding road.***
- ***Uneven road surface condition.***
- ***Windy road.***
- ***The vehicle drives on a curvy road.***
- ***The vehicle drives through a windy area.***

(Continued)

(Continued)

- ***The vehicle drives on a bumpy road.***
- ***The vehicle is controlled by the following driving assist systems:***
  - ***Lane Keeping Assist (LKA) system***
  - ***Forward Collision-avoidance Assist (FCA) system***
  - ***Blind-Spot Collision-Avoidance Assist (BCA) System***
  - ***Lane Following Assist (LFA) System***
  - ***Smart Cruise Control (SCC) system***

⚠ CAUTION

Playing the vehicle audio system at high volume may prevent you from hearing the Driver Attention Warning (DAW) system warning sounds.

ON ENG 5.qxp 3/18/2019 2:45 PM Page 128

BLIND-SPOT COLLISION WARNING/BLIND-SPOT COLLISION-AVOIDANCE ASSIST (IF EQUIPPED)

System description

Blind-Spot Collision Warning (BCW)

The Blind-Spot Collision Warning System (BCW) uses radar sensors in the rear bumper to monitor and warn the driver of an approaching vehicle in the driver's blind spot area.

1) Blind-Spot Area

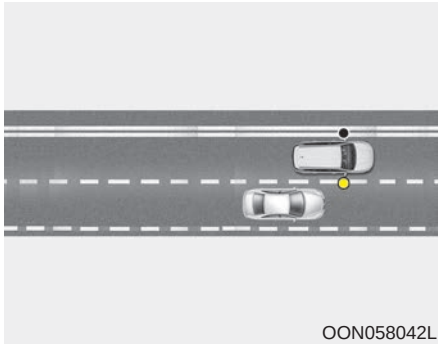

OON058042L

The blind spot detection range varies relative to vehicle speed.

Note that if your vehicle is traveling much faster than the vehicles around you, the warning will not occur.

2) Closing at high speed

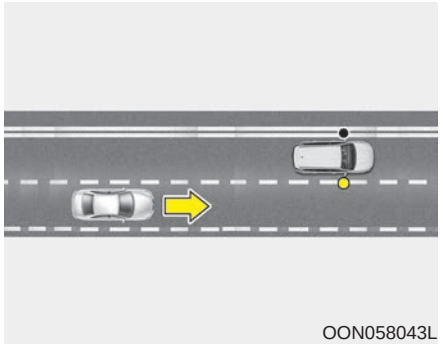

OON058043L

The Lane Change Assist feature will alert you when a vehicle is approaching in an adjacent lane at a high rate of speed. If the driver activates the turn signal when the system detects an oncoming vehicle, the system sounds an audible alert.

Blind-Spot Collision-Avoidance Assist (BCA)

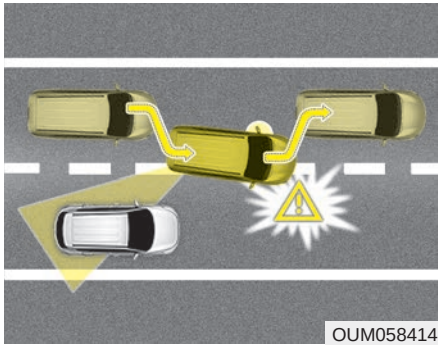

OUM058414

The Blind-Spot Collision-Avoidance Assist System (BCA) detects the front lane through the camera installed on the upper front windshield and detects the side/rear areas through radar sensors.

The Blind-Spot Collision-Avoidance Assist System may activate the Electronic Stability Control (ESC) in accordance with a colliding possibility with an approaching vehicle while changing lanes. It is to lower the colliding risk or mitigate the colliding damage.

ON ENG 5.qxp 3/18/2019 2:45 PM Page 129

⚠ WARNING

- **Always be aware of road conditions while driving and be alert for unexpected situations even though the Blind-Spot Collision Warning System and Blind-Spot Collision-Avoidance Assist System are operating.**
- **The Blind-Spot Collision Warning System (BCW) and Blind-Spot Collision-Avoidance Assist System (BCA) are supplemental systems to assist you. Do not entirely rely on the systems. Always pay attention, while driving, for your safety.**

(Continued)

(Continued)

- **The Blind-Spot Collision Warning System (BCW) and Blind-Spot Collision-Avoidance Assist System (BCA) are not substitutes for proper and safe driving. Always drive safely and use caution when changing lanes or backing up the vehicle. The Blind-Spot Collision Warning System (BCW) and Blind-Spot Collision-Avoidance Assist System (BCA) may not detect every object alongside the vehicle.**

System setting and activation

System setting

- The driver can activate the system by placing the engine Start/Stop button to the ON position and by selecting "User Settings → Driver assistance → Blind-spot safety"

  - The BCA and BCW turn on and get ready to be activated when 'Active assist' is selected. Then, if a vehicle approaches the driver's blind spot area a warning sounds or braking power is applied.

  - The BCW turns on and gets ready to be activated when 'Warning only' is selected. Then, if a vehicle approaches the driver's blind spot area a warning sounds.

  - The system is deactivated and the indicator on the BCW/BCA button is extinguished when 'Off' is selected.

ON ENG 5.qxp 3/18/2019 2:45 PM Page 130

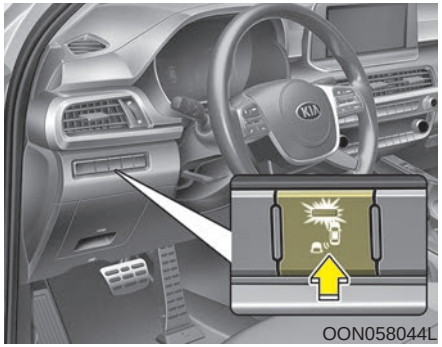

- If you press BCW/BCA button while 'Active assist' or 'Warning only' is selected the indicator on the button extinguishes and the system deactivates.
- If you press BCW/BCA button while the system is cancelled the indicator on the button illuminates and the system activates. In this case, the system returns to the state before the engine turned off. When the system is initially turned on and when the engine is turned off then on again while the system is in activation, the warning light will illuminate for 3 seconds on the outside rearview mirror.
- If the engine is turned off then on again, the system maintains the previous state.
- The driver can select the initial warning activation time in the User Settings → Driver assistance → Warning timing"
- The options for the initial Blind-Spot Collision Warning includes the following:

  - Normal:

    When this condition is selected, the initial Blind-Spot Collision Warning is activated normally. If this setting feels too sensitive change the option to 'later'.

    The warning activation time may feel late if the side/rear vehicle abruptly accelerates.

  - Later:

    Select this warning activation time when the traffic is light and you are driving in a low speed.

✻ NOTICE

If you change the warning timing, the warning time of other systems may change. Always be aware before changing the warning timing.

The driver can select the warning volume of Blind-Spot Collision Warning by selecting "User Settings → Driver assistance → Warning volume → High/Medium/Low".

✻ NOTICE

If you change the warning volume, the warning volume of other systems may change. Always be aware before changing the warning volume.

For more information refer to "LCD Display" in chapter 4.

ON ENG 5.qxp 3/18/2019 2:45 PM Page 131

Operating conditions

The system enters the ready status, when 'Active assistance' of 'Warning Only' is selected and the following conditions are satisfied:

• Active assistance

(1) The Blind-Spot Collision-Avoidance Assist system will activate when:

- Vehicle speed is between 60 km/h (37 mph) and 180 km/h (110 mph).
- The system detects both of the lane lines.
- An approaching vehicle is detected next to or behind your vehicle.

(2) The Blind-Spot Collision Warning system will activate when:

- The vehicle speed above approximately 30 km/h (20 mph).

• Warning Only

(1) The Blind-Spot Collision Warning system will activate when:

- The vehicle speed above approximately 30 km/h (20 mph).

❈ The Blind-Spot Collision-Avoidance Assist is not activate.

Warning message and system control

Blind-Spot Collision Warning (BCW) system

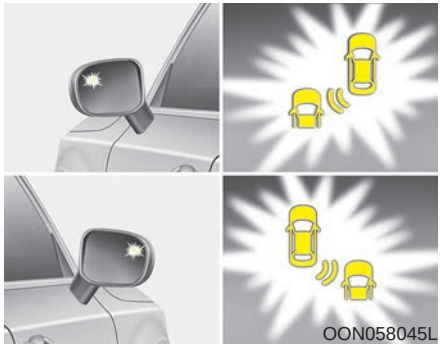

First stage alert

If a vehicle is detected within the boundary of the system, a warning light will illuminate on the outside rearview mirror and the head up display (if equipped).

Once the detected vehicle is no longer within the blind spot area, the warning will turn off according to the driving conditions of the vehicle.

ON ENG 5.qxp 3/18/2019 2:45 PM Page 132



OON058046L

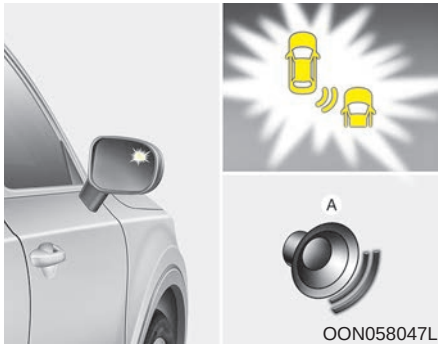

OON058047L

[A] : Warning sound

Second stage alert

A warning chime to alert the driver will activate when:

1. A vehicle has been detected in the blind spot area by the radar system AND.
2. The turn signal is applied (same side as where the vehicle is being detected).

When this alert is activated, the warning light on the outside rearview mirror and the head up display (if equipped) will also blink. And a warning chime will sound.

If you turn off the turn signal indicator, the second stage alert will be deactivated.

Once the detected vehicle is no longer within the blind spot area, the warning will turn off according to the driving conditions of the vehicle.

⚠ WARNING

- **The warning light on the outside rearview mirror will illuminate whenever a vehicle is detected at the rear side by the system.**

  To avoid accidents, do not focus only on the warning light and neglect to see the surrounding of the vehicle.
- **Drive safely even though the vehicle is equipped with a Blind-Spot Collision Warning System (BCW). Do not solely rely on the system but check your surrounding before changing lanes or backing the vehicle up.**
- **The system may not alert the driver in some conditions so always check your surroundings while driving.**

ON ENG 5.qxp 3/18/2019 2:46 PM Page 133

⚠ CAUTION

- ***The driver should always exercise extreme caution while operating the vehicle, whether or not the warning light on the outside rearview mirror illuminates or there is a warning alarm.***
- ***Playing the vehicle audio system at high volume may prevent you from hearing the Blind-Spot Collision Warning System warning sounds.***
- ***The warning of the Blind-Spot Collision Warning System may not sound while other system's warning sounds.***

Blind-Spot Collision-Avoidance Assist (BCA) system



OON058105L



OON058106L

The Blind-Spot Collision-Avoidance Assist System (BCA) may apply braking power, when an approaching vehicle is detected within a certain distance next to/behind your vehicle. It gently applies braking power on the tire, which is located in the opposite side of the possibly-colliding point. The instrument cluster will inform the driver of the system activation.

Blind-Spot Collision-Avoidance Assist System (BCA) is automatically deactivated when:

- The vehicle drives a certain distance away
- The vehicle direction is changed against the possible-colliding point
- The steering wheel is abruptly moved
- The brake pedal is depressed
- After a certain period of time

The driver should drive the vehicle in the middle of the vehicle lanes to keep the system in the ready status.

When the vehicle drives too close to one side of the vehicle lanes, the system may not properly operate.

In addition, the system may not properly control your vehicle in accordance with driving situations. Thus, always pay close attention to road situations.

ON ENG 5.qxp 3/18/2019 2:46 PM Page 134

⚠ WARNING

- **The driver is responsible for accurate steering.**
- **Do not unnecessarily operate the steering wheel, when the Blind-Spot Collision-Avoidance Assist System is in operation.**
- **Always exercise extreme caution while driving. The Blind-Spot Collision-Avoidance Assist System may not operate or unnecessarily operate in accordance with your driving situations.**
- **The Blind-Spot Collision-Avoidance Assist System is not a substitute for safe driving practices, but a convenience function only. It is the responsibility of the driver to always drive cautiously to prevent unexpected and sudden situations from occurring. Pay attention to the road conditions at all times.**

Detecting Sensor (Camera and Radar)

■ Front camera

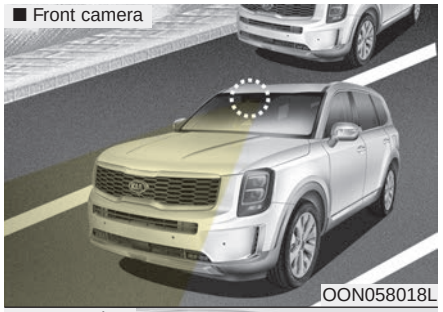

OON058018L

■ Rear radar



OON058048L

Front camera

The front camera is a sensor detecting the lane. If the sensor is covered with snow, rain or foreign substance, the system may temporarily be cancelled and not work properly until the cancellation due to the degradation of the sensor's detection performance. Always keep the sensor clean.

* Refer to Lane Keeping Assist (LKA) System for cautions for the front camera sensor.

Rear radar

The rear radars are the sensors inside the rear bumper for detecting the side/rear areas. Always keep the rear bumper clean for proper operation of the system.

ON ENG 5.qxp 3/18/2019 2:46 PM Page 135

⚠ CAUTION

- *The system may not work properly when the bumper has been damaged, or if the rear bumper has been replaced or repaired.*
- *The sensing range differs somewhat according to the width of the road. When the road is narrow, the system may detect other vehicles in the next lane.*
- *The system may turn off due to strong electromagnetic waves.*
- *Always keep the sensors clean.*
- *NEVER arbitrarily disassemble the sensor component nor apply any impact on the sensor component.*
- *Be careful not to apply unnecessary force on the radar sensor or sensor cover. If the sensor is forcibly moved out of proper alignment, the system may not operate correctly. In this case, a warning message may not be displayed.*

(Continued)

(Continued)

Have the vehicle inspected by a professional workshop. Kia recommends to visit an authorized Kia dealer/service partner.

- *Do not apply foreign objects such as a bumper sticker or a bumper guard near the radar sensor or apply paint to the sensor area. Doing so may adversely affect the performance of the sensor.*
- *NEVER install any accessories or stickers on the front windshield, nor tint the front windshield.*
- *Pay special attention to keep the camera sensor out of water.*
- *NEVER locate any reflective objects (i.e. white paper, mirror) over the crash pad. Any light reflection may cause a malfunction of the system.*



OON058107L

Blind-Spot Collision Warning (BCW) system disabled.

Radar blocked

- This warning message may appear when :
  - One or both of the sensors on the rear bumper is blocked by dirt or snow or a foreign object.
  - Driving in rural areas where the sensor does not detect another vehicle for an extended period of time.
  - When there is inclement weather such as heavy snow or rain.

ON ENG 5.qxp 3/18/2019 2:46 PM Page 136

If any of these conditions occur, the light on the BCW switch and the system will turn off automatically.

When the BCW canceled warning message is displayed in the cluster, check to make sure that the rear bumper is free from any dirt or snow in the areas where the sensor is located. Remove any dirt, snow, or foreign material that could interfere with the radar sensors.

After any dirt or debris is removed, the BCA should operate normally after about 10 minutes of driving the vehicle.

If the system still does not operate normally, have your vehicle inspected by a professional workshop. Kia recommends to contact an authorized Kia dealer/service partner.

✻ NOTICE

Turn off the BCW and BCA system (if equipped) when a trailer or carrier is installed.

- **Press the BCW/BCA button (the indicator on the button extinguish)**
- **Deactivate the RCCW system by deselecting "User Settings → Driver assistance → Parking safety → Rear Cross-Traffic Safe" (if equipped)**

If you use BCW and BCA system, remove a trailer or carrier.



OON058108L

Check Blind-Spot Collision Warning (BCW) system

If there is a problem with the BCW system, a warning message will appear and the light on the switch will turn off. The system will turn off automatically. BCA will not operate also if the BCW system turns off due to malfunction. In this case, have your vehicle inspected by a professional workshop. Kia recommends to contact an authorized Kia dealer/service partner.

ON ENG 5.qxp 3/18/2019 2:46 PM Page 137



OON058109L

Check Blind-Spot Collision-Avoidance Assist (BCA) system

If there is a problem with the BCA system, a warning message will appear. The system will turn off automatically. BCW will still operate even if the BCA system turns off due to malfunction. In this case, have your vehicle inspected by a professional workshop. Kia recommends to contact an authorized Kia dealer/service partner.

Limitations of the system

The driver must be cautious in the below situations, because the system may not detect other vehicles or objects in certain circumstances.

- When a trailer or carrier is installed.
- The vehicle drives in inclement weather such as heavy rain or snow.
- The sensor is polluted with rain, snow, mud, etc.
- The rear bumper where the sensor is located is covered with a foreign object such as a bumper sticker, a bumper guard, a bike rack, etc.
- The rear bumper is damaged, or the sensor is out of the original default position.
- The vehicle height gets lower or higher due to heavy loading in a tailgate, abnormal tire pressure, etc.
- When the temperature of the rear bumper is high.
- When the sensors are obscured by other vehicles, walls or parking-lot pillars.
- The vehicle drives on a curved road.
- The vehicle drives through a tollgate.
- The road pavement (or the peripheral ground) abnormally contains metallic components (i.e. possibly due to subway construction).
- There is a fixed object near the vehicle, such as a guardrail.
- While going down or up a steep road where the height of the lane is different.
- Driving on a narrow road where trees or grass or overgrown.
- Driving in rural areas where the sensor does not detect another vehicle or structure for an extended period of time.
- Driving on a wet road.

ON ENG 5.qxp 3/18/2019 2:46 PM Page 138

- Driving on a road where the guardrail or wall is in double structure.
- A big vehicle is near such as a bus or truck.
- When the other vehicle approaches very close.
- When the other vehicle passes at a very fast speed.
- While changing lanes.
- If the vehicle has started at the same time as the vehicle next to you and has accelerated.
- When the vehicle in the next lane moves two lanes away from you OR when the vehicle two lanes away moves to the next lane from you.
- A motorcycle or bicycle is near.
- A flat trailer is near.
- If there are small objects in the detecting area such as a shopping cart or a baby stroller.
- If there is a low height vehicle such as a sports car.
- The brake pedal is depressed.
- ESC (Electronic Stability Control) is activated.
- ESC (Electronic Stability Control) malfunctions.
- The tire pressure is low or a tire is damaged.
- The brake is reworked.
- The vehicle abruptly changes driving direction.
- The vehicle makes sharp lane changes.
- The vehicle sharply stops.
- Temperature is extremely low around the vehicle.
- The vehicle severely vibrates while driving over a bumpy road, uneven/bumpy road, or concrete patch.
- The vehicle drives on a slippery surface due to snow, water puddle, or ice.
- The Lane Keeping Assist (LKA) or Lane Departure Warning (LDW) do not operate normally. (if equipped)

  For more information refer to "Lane Keeping Assist (LKA) system" in this chapter.

ON ENG 5.qxp 3/18/2019 2:46 PM Page 139

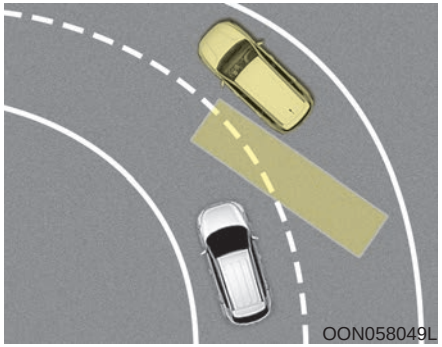

• Driving on a curve

The BCW and BCA systems may not operate properly when driving on a curved road. In certain instances the system may not detect the vehicle in the next lane.

Always pay attention to road and driving conditions, while driving.

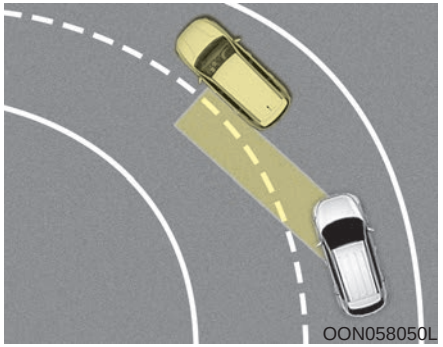

The BCW and BCA systems may not operate properly when driving on a curved road. In certain instances the system may recognize a vehicle in the same lane.

Always pay attention to road and driving conditions, while driving.

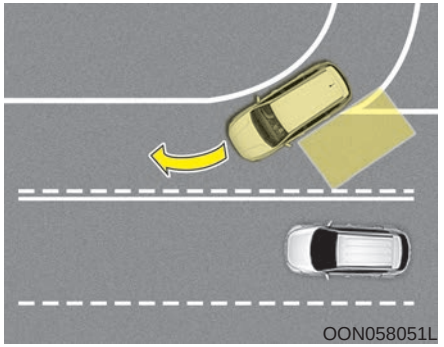

• Driving where the road is merging/dividing

The BCW and BCA systems may not operate properly when driving where the road is merging/dividing. In certain instances the system may not detect the vehicle in the next lane.

Always pay attention to road and driving conditions, while driving.

ON ENG 5.qxp 3/18/2019 2:46 PM Page 140

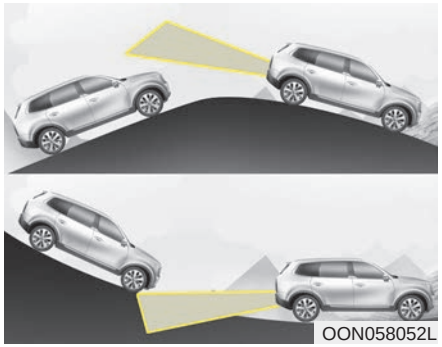
OON058052L

• Driving on a slope

The BCW and BCA systems may not operate properly when driving on a slope. In certain instances the system may not detect the vehicle in the next lane.

Also, in certain instances the system may wrongly recognize the ground or structures.

Always pay attention to road and driving conditions, while driving.

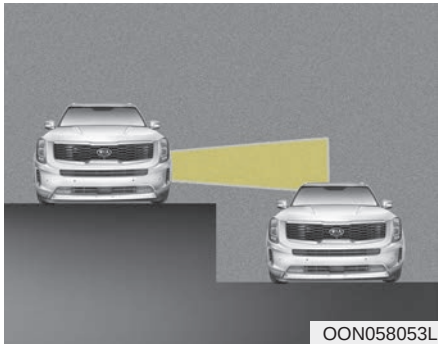
OON058053L

• Driving where the heights of the lanes are different

The BCW and BCA systems may not operate properly when driving where the heights of the lanes are different.

In certain instances, the system may not detect the vehicle on a road with different lane heights (underpass joining section, grade separated intersections, etc.).

Always pay attention to road and driving conditions, while driving.

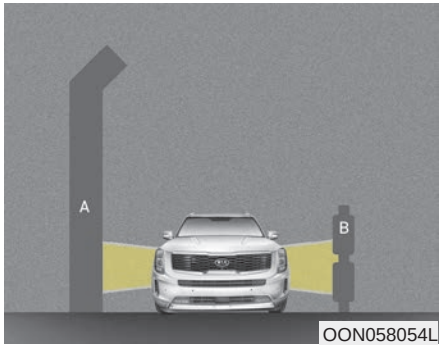

OON058054L

[A] : noise barrier, [B] : guardrail

• Driving where there is a structure beside the road

The BCW and BCA systems may not operate properly when driving where there is structure beside the road.

In certain instances, the system may wrongly recognize the structures (noise barriers, guardrail, double guardrail, median strip, bollard, street light, road sign, tunnel wall, etc.) beside the road.

Always pay attention to road and driving conditions, while driving.

ON ENG 5.qxp 3/18/2019 2:46 PM Page 141

REAR CROSS-TRAFFIC COLLISION WARNING (RCCW) SYSTEM / REAR CROSS-TRAFFIC COLLISION-AVOIDANCE ASSIST (RCCA) SYSTEM (IF EQUIPPED)

System description

Rear Cross-Traffic Collision Warning (RCCW) System

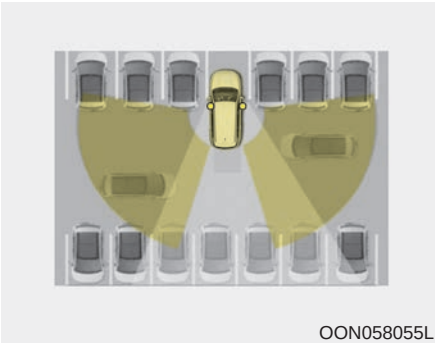

OON058055L

The Rear Cross-Traffic Collision Warning (RCCW) System uses radar sensors to monitor the approaching cross traffic from the left and right side of the vehicle when your vehicle is in reverse.

The blind spot detection range varies relative to the approaching vehicle speed.

Rear Cross-Traffic Collision-Avoidance Assist (RCCA) System

The Rear Cross-Traffic Collision-Avoidance Assist (RCCA) System monitors approaching cross traffic from the left and right side of the vehicle when your vehicle is approaching.

The Rear Cross-Traffic Collision-Avoidance Assist (RCCA) System may activate the Electronic Stability Control (ESC) in accordance with a colliding possibility with an approaching vehicle. It is to lower the colliding risk or mitigate the colliding damage.

⚠ WARNING

- **Always be aware of road conditions while driving and be alert for unexpected situations even though the Rear Cross-Traffic Collision Warning System and Rear Cross-Traffic Collision-Avoidance Assist System are operating.**
- **The Rear Cross-Traffic Collision Warning System and Rear Cross-Traffic Collision-Avoidance Assist System are supplemental systems to assist you. Do not entirely rely on the systems. Always pay attention, while driving, for your safety.**
- **The Rear Cross-Traffic Collision Warning System and Rear Cross-Traffic Collision-Avoidance Assist System are not substitutes for proper and safe driving. Always drive safely and use caution when backing up the vehicle.**

ON ENG 5.qxp 3/18/2019 2:46 PM Page 142

System setting and activation

System setting

- The driver can activate the systems by placing the engine Start/Stop button to the ON position and by selecting 'User Settings → Driver Assistance → Parking safety → Rear Cross-Traffic Safety'. The RCCA and RCCW turn on and get ready to be activated when 'Rear Cross-Traffic safety' is selected.
- When the engine is turned off then on again, the systems always get ready to be activated.
- When the system is initially turned on and when the engine is turned off then on again, the warning light will illuminate for 3 seconds on the outside rearview mirror.

The driver can select the initial warning activation time in the LCD display by selecting “User Settings → Driver assistance → Warning timing". The options for the initial Rear Cross-Traffic Collision Warning includes the following:

- Normal:

When this condition is selected, the initial Rear Cross-Traffic Collision Warning is activated normally. If this setting feels too sensitive change the option to ‘Later’.

The warning activation time may feel late if the side/rear vehicle abruptly accelerates.

- Later:

Select this warning activation time when the traffic is light and you are driving in a low speed.

✻ NOTICE

If you change the warning timing, the warning time of other systems may change. Always be aware before changing the warning timing.

The driver can select the warning volume of the Rear Cross-Traffic Collision Warning by selecting "User Settings → Driver assistance → Warning volume → High/Medium/Low".

✻ NOTICE

If you change the warning volume, the warning volume of other systems may change. Always be aware before changing the warning volume.

For more information refer to "LCD Display" in chapter 4.

ON ENG 5.qxp 3/18/2019 2:46 PM Page 143

Operating conditions

To operate:

Go to the 'User Settings → Parking safety → Rear Cross-Traffic Safety' on the LCD display. The system will turn on and standby to activate.

The system will activate when vehicle speed is below 10 km/h (7 mph) and with the shift lever in R (Reverse).

* The system will not activate when the vehicle speed exceeds 10 km/h (7 mph). The system will activate again when the speed is below 10 km/h (7 mph).

The system's detecting range is approximately 0.5 m ~ 20 m (1 ft ~ 65 ft). An approaching vehicle will be detected if their vehicle speed is within 8 km/h ~ 36 km/h (5 ~ 22.5 mph).

Note that the detecting range may vary under certain conditions. As always, use caution and pay close attention to your surroundings when backing up your vehicle.

Warning message and system control

Rear Cross-Traffic Collision Warning (RCCW) System

■ Left

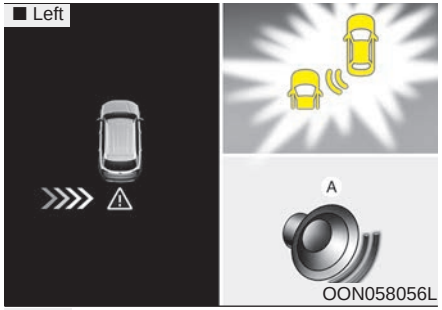

OON058056L

■ Right

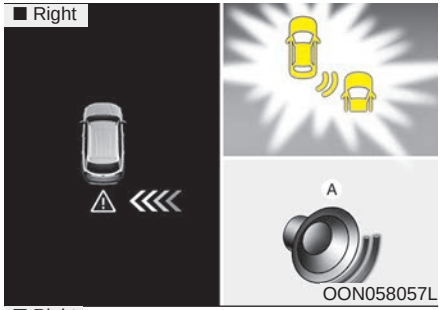

OON058057L

■ Left

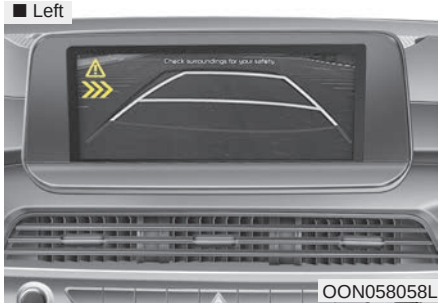

OON058058L

■ Right



OON058059L

If the vehicle detected by the sensors approaches from the rear left/right side of your vehicle, the warning chime will sound, the warning light on the outside rearview mirror will blink and a message will appear on the LCD display. If the rear view monitor system is in activation, a message will also appear on the audio or multimedia screen.

ON ENG 5.qxp 3/18/2019 2:46 PM Page 144

The warning will stop when:

- The vehicle moving at the rear left/right side of your vehicle is not in the detection range.
- The vehicle is right behind your vehicle.
- The vehicle is not driving towards your vehicle.
- The vehicle's approaching speed is decreased.

Rear Cross-Traffic Collision-Avoidance (RCCA) System

■ Left



OON058111L

■ Right

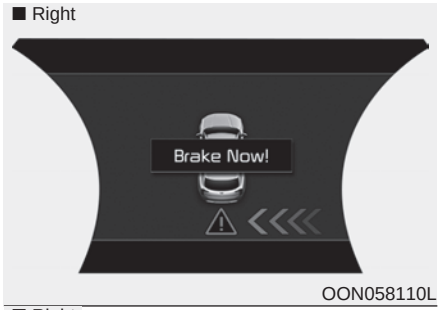

OON058110L

■ Left



OON058058L

■ Right

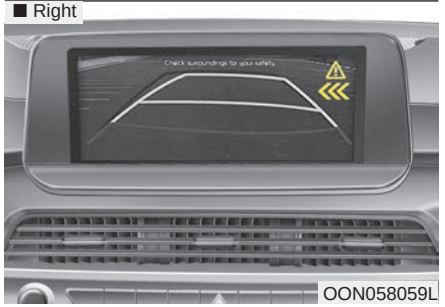

OON058059L

If the risk of collision is detected while the RCCW is generated, brake is controlled. The instrument cluster will inform the driver of the brake control. If the rear view monitor system is in activation, a message will also appear on the audio or multimedia screen.

ON ENG 5.qxp 3/18/2019 2:46 PM Page 145

After the brake control the driver must immediately depress the brake pedal and check the surroundings.

- The brake activation by the system lasts for about 2 seconds only.

  The driver must pay attention as the brake is disengaged after the time.
- The brake control by the system is cancelled if the driver depresses the pedal with sufficient power.
- Brake control is activated once for each right/left approach after shifting the shift lever to R (Reverse).

The brake control may not operate properly according to the status of the ESC (Electronic Stability Control). The same warning message is displayed on the instrument cluster for this case also.

- When the ESC (Electronic Stability Control) warning light is on.
- When the ESC (Electronic Stability Control) is engaged in a different function.

⚠ CAUTION

- ***When the operation condition of the Rear Cross-Traffic Collision Warning System is satisfied the warning will occur every time a vehicle approaches the side/rear of your stopped (0 km/h vehicle speed) vehicle.***

(Continued)

(Continued)

- ***The system's warning or brake may not operate properly if the left/right of your vehicle's rear bumper is obscured by a vehicle or obstacle.***
- ***The driver should always exercise extreme caution while operating the vehicle, whether or not the warning light on the outside rearview mirror illuminates or there is a warning alarm.***
- ***Playing the vehicle audio system at high volume may prevent you from hearing the system's warning sounds.***
- ***The warning of the Rear Cross-Traffic Collision Warning System may not sound while other system's warning sounds.***
- ***If any other warning sound such as seat belt warning chime is already generated, the Rear Cross-Traffic Collision Warning system warning may not sound.***

ON ENG 5.qxp 3/18/2019 2:46 PM Page 146

⚠ WARNING

- **Drive safely even though the vehicle is equipped with a Rear Cross-Traffic Collision Warning System and Rear Cross-Traffic Collision-Avoidance Assist System. Do not solely rely on the system but check your surrounding when backing the vehicle up.**
- **The driver is responsible for accurate brake control.**

(Continued)

(Continued)

- **Always exercise extreme caution while driving. The Rear Cross-Traffic Collision Warning System and Rear Cross-Traffic Collision-Avoidance Assist System may not operate properly or unnecessarily operate in accordance with your driving situations.**
- **The Rear Cross-Traffic Collision-Avoidance Assist System is not a substitute for safe driving practices, but a convenience function only. It is the responsibility of the driver to always drive cautiously to prevent unexpected and sudden situations from occurring. Pay attention to the road conditions at all times.**

Detecting Sensor



The rear radars are the sensors inside the rear bumper for detecting the side/rear areas. Always keep the rear bumper clean for proper operation of the system.

ON ENG 5.qxp 3/18/2019 2:46 PM Page 147

⚠ CAUTION

- *The system may not work properly when the bumper has been damaged, or if the rear bumper has been replaced or repaired.*
- *The system may turn off due to strong electromagnetic waves.*
- *Always keep the sensors clean.*
- *NEVER arbitrarily disassemble the sensor component nor apply any impact on the sensor component.*
- *Be careful not to apply unnecessary force on the radar sensor or sensor cover. If the sensor is forcibly moved out of proper alignment, the system may not operate correctly. In this case, a warning message may not be displayed.*

(Continued)

(Continued)

Have the vehicle inspected by a professional workshop. Kia recommends to contact an authorized Kia dealer/service partner.

- *Do not apply foreign objects such as a bumper sticker or a bumper guard near the radar sensor or apply paint to the sensor area. Doing so may adversely affect the performance of the sensor.*



OON058107L

Blind-Spot Collision Warning (BCW) system disabled. Radar blocked

- This warning message may appear when:
  - One or both of the sensors on the rear bumper is blocked by dirt or snow or a foreign object.
  - Driving in rural areas where the sensor does not detect another vehicle for an extended period of time.
  - When there is inclement weather such as heavy snow or rain.

ON ENG 5.qxp 3/18/2019 2:46 PM Page 148

If any of these conditions occur, the light on the BCW switch and the system will turn off automatically.

When the BCW canceled warning message is displayed in the cluster, check to make sure that the rear bumper is free from any dirt or snow in the areas where the sensor is located. Remove any dirt, snow, or foreign material that could interfere with the radar sensors.

After any dirt or debris is removed, the RCCA system should operate normally after about 10 minutes of driving the vehicle.

If the system still does not operate normally, have your vehicle inspected by a professional workshop. Kia recommends to contact an authorized Kia dealer/service partner.



OON058108L

Check Blind-Spot Collision Warning (BCW) system

If there is a problem with the BCW system, a warning message will appear and the light on the switch will turn off. The system will turn off automatically. RCCW and RCCA will not operate also if the BCW system turns off due to malfunction. In this case, have your vehicle inspected by a professional workshop. Kia recommends to contact an authorized Kia dealer/service partner.

Limitations of the system

The driver must be cautious in the below situations, because the system may not detect other vehicles or objects in certain circumstances.

- When a trailer or carrier is installed.
- The vehicle drives in inclement weather such as heavy rain or snow.
- The sensor is polluted with rain, snow, mud, etc.
- The rear bumper where the sensor is located is covered with a foreign object such as a bumper sticker, a bumper guard, a bike rack, etc.
- The rear bumper is damaged, or the sensor is out of the original default position.
- The vehicle height gets lower or higher due to heavy loading in a trunk (tailgate), abnormal tire pressure, etc.
- When the temperature of the rear bumper is high.

ON ENG 5.qxp 3/18/2019 2:46 PM Page 149

- When the sensors are blocked by other vehicles, walls or parking-lot pillars.
- The vehicle drives on a curved road.
- The road pavement (or the peripheral ground) abnormally contains metallic components (i.e. possibly due to subway construction).
- There is a fixed object near the vehicle, such as a guardrail.
- While going down or up a steep road where the height of the lane is different.
- Driving on a narrow road where trees or grass or overgrown.
- Driving in rural areas where the sensor does not detect another vehicle for an extended period of time.
- Driving on a wet road.
- Driving on a road where the guardrail or wall is in double structure.
- A big vehicle is near such as a bus or truck.
- When the other vehicle approaches very close.
- When the other vehicle passes at a very fast speed.
- While changing lanes.
- If the vehicle has started at the same time as the vehicle next to you and has accelerated.
- When the vehicle in the next lane moves two lanes away from you OR when the vehicle two lanes away moves to the next lane from you.
- A motorcycle or bicycle is near.
- A flat trailer is near.
- If there are small objects in the detecting area such as a shopping cart or a baby stroller.
- If there is a low height vehicle such as a sports car.
- The brake pedal is depressed.
- ESC (Electronic Stability Control) is activated.
- ESC (Electronic Stability Control) malfunctions.
- The tire pressure is low or a tire is damaged.
- The brake is reworked.
- The vehicle sharply stops.
- Temperature is extremely low around the vehicle.
- The vehicle severely vibrates while driving over a bumpy road, uneven/bumpy road, or concrete patch.
- The vehicle drives on a slippery surface due to snow, water puddle, or ice.

ON ENG 5.qxp 3/18/2019 2:47 PM Page 150

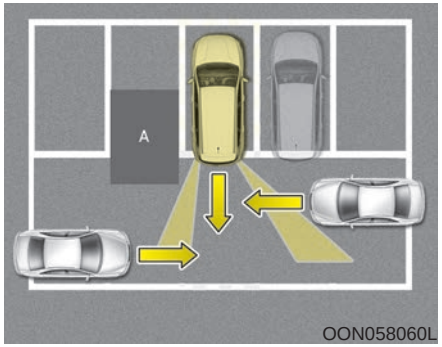

[A] : Structure

- Driving where there is a vehicle or structure near

The system may not operate properly when driving where there is a vehicle or structure near.

In certain instances, the system may not detect the vehicle approaching from behind and the warning or brake may not operate properly.

Always pay attention to your surrounding while driving.

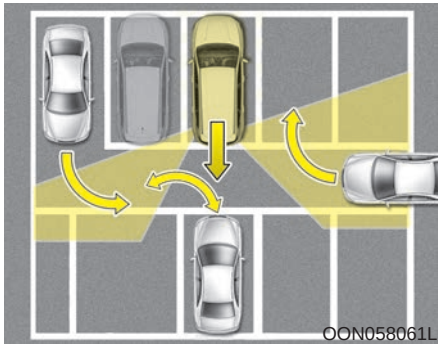

- When the vehicle is in a complex parking environment

The system may not operate properly when the vehicle is in a complex parking environment.

In certain instances, the system may not be able to exactly determine the risk of collision for the vehicles which are parking or pulling out near your vehicle (e.g. a vehicle escaping beside your vehicle, a vehicle parking or pulling out in the rear area, a vehicle approaching your vehicle making a turn, etc.).

In this case, the warning or brake may not operate properly.

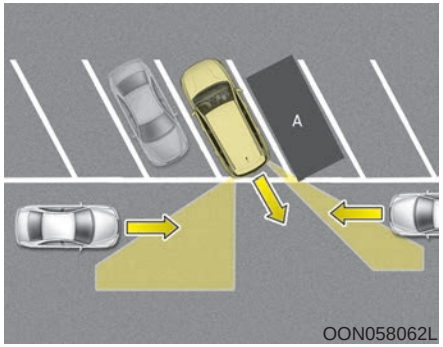

[A] : Vehicle

- When the vehicle is parked diagonally

The system may not operate properly when the vehicle is parked diagonally.

In certain instances, when the diagonally parked vehicle is pulled out of the parking space, the system may not detect the vehicle approaching from the rear left/right of your vehicle. In this case, the warning or brake may not operate properly.

Always pay attention to your surrounding while driving.

ON ENG 5.qxp 3/18/2019 2:47 PM Page 151

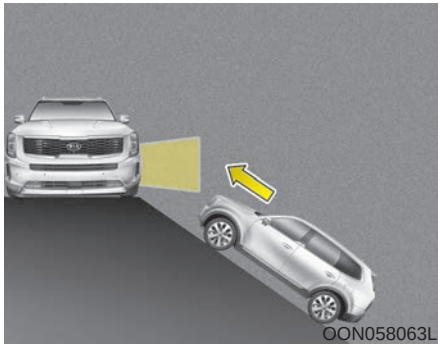
OON058063L

- When the vehicle is on/near a slope

The system may not operate properly when the vehicle is on/near a slope.

In certain instances, the system may not detect the vehicle approaching from the rear left/right and the warning or brake may not operate properly.

Always pay attention to your surrounding while driving.

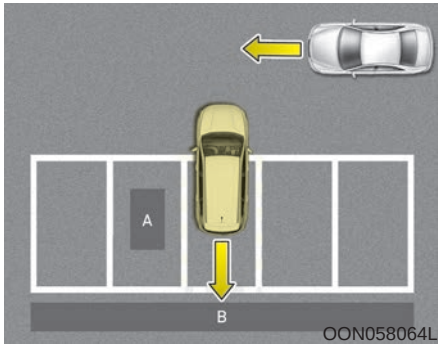

OON058064L

[A] : Structure, [B] : Wall

- Pulling into the parking space where there is a structure

The system may not operate properly when pulling in the vehicle to the parking space where there is a structure at the back or side of your vehicle.

In certain instances, when backing into the parking space, the system may false detect the vehicle moving in front of your vehicle. In this case, the warning may operate falsely.

Always pay attention to the parking space while driving.

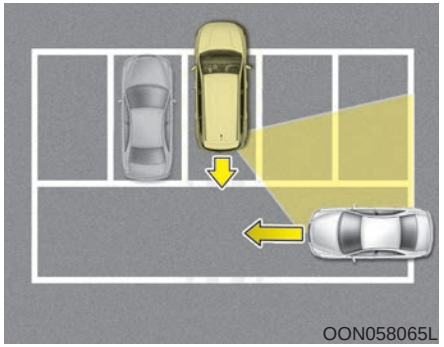
OON058065L

- When the vehicle is parked rearward

If the vehicle is parked rearward and the sensor detects the another vehicle in the rear area of the parking space, the system can warn or control braking. Always pay attention to the parking space while driving.

ON ENG 5.qxp 3/18/2019 2:47 PM Page 152

ECONOMICAL OPERATION

Your vehicle's fuel economy depends mainly on your style of driving, where you drive and when you drive.

Each of these factors affects how many kilometers (miles) you can get from a liter (gallon) of fuel. To operate your vehicle as economically as possible, use the following driving suggestions to help save money in both fuel and repairs:

- Drive smoothly. Accelerate at a moderate rate. Do not make "jackrabbit" starts or full-throttle shifts and maintain a steady cruising speed. Do not race between stoplights. Try to adjust your speed to the traffic so you do not have to change speeds unnecessarily. Avoid heavy traffic whenever possible. Always maintain a safe distance from other vehicles so you can avoid unnecessary braking. This also reduces brake wear.
- Drive at a moderate speed. The faster you drive, the more fuel your vehicle uses. Driving at a moderate speed, especially on the highway, is one of the most effective ways to reduce fuel consumption.
- Do not "ride" the brake pedal. This can increase fuel consumption and also increase wear on these components. In addition, driving with your foot resting on the brake pedal may cause the brakes to overheat, which reduces their effectiveness and may lead to more serious consequences.
- Take care of your tires. Keep them inflated to the recommended pressure. Incorrect inflation, either too much or too little, results in unnecessary tire wear. Check the tire pressures at least once a month.
- Be sure that the wheels are aligned correctly. Improper alignment can result from hitting curbs or driving too fast over irregular surfaces. Poor alignment causes faster tire wear and may also result in other problems as well as greater fuel consumption.
- Keep your vehicle in good condition. For better fuel economy and reduced maintenance costs, maintain your vehicle in accordance with the maintenance schedule in section 7. If you drive your vehicle in severe conditions, more frequent maintenance is required (see section 7 for details).
- Keep your vehicle clean. For maximum service, your vehicle should be kept clean and free of corrosive materials. It is especially important that mud, dirt, ice, etc. not be allowed to accumulate on the underside of the vehicle. This extra weight can result in increased fuel consumption and also contribute to corrosion.
- Travel lightly. Do not carry unnecessary weight in your vehicle. Weight reduces fuel economy.
- Do not let the engine idle longer than necessary. If you are waiting (and not in traffic), turn off your engine and restart only when you're ready to go.

ON ENG 5.qxp 3/18/2019 2:47 PM Page 153

- Remember, your vehicle does not require extended warm-up. After the engine has started, allow the engine to run for 10 to 20 seconds prior to placing the vehicle in gear. In very cold weather, however, give your engine a slightly longer warm-up period.
- Do not "lug" or "over-rev" the engine. Lugging is driving too slowly in too high a gear resulting engine bucking. If this happens, shift to a lower gear. Over-revving is racing the engine beyond its safe limit. This can be avoided by shifting at the recommended speeds.
- Use your air conditioning sparingly. The air conditioning system is operated by engine power so your fuel economy is reduced when you use it.
- Open windows at high speeds can reduce fuel economy.
- Fuel economy is less in crosswinds and headwinds. To help offset some of this loss, slow down when driving in these conditions.

Keeping a vehicle in good operating condition is important both for economy and safety. Therefore, have the system serviced by a professional workshop.

Kia recommends to visit an authorized Kia dealer/service partner.

⚠ WARNING - Engine off during motion

Never turn the engine off to coast down hills or anytime the vehicle is in motion. The power steering and power brakes will not function properly without the engine running. Instead, keep the engine on and downshift to an appropriate gear for engine braking effect. In addition, turning off the ignition while driving could engage the steering wheel lock (if equipped) resulting in loss of vehicle steering which could cause serious injury or death.

ON ENG 5.qxp 3/18/2019 2:47 PM Page 154

SPECIAL DRIVING CONDITIONS

Hazardous driving conditions

When hazardous driving conditions are encountered such as water, snow, ice, mud, sand, or similar hazards, follow these suggestions:

- Drive cautiously and allow extra distance for braking.
- Avoid sudden braking or steering.
- When braking with non-ABS brakes pump the brake pedal with a light up-and-down motion until the vehicle is stopped.

⚠ WARNING - ABS

Do not pump the brake pedal on a vehicle equipped with ABS.

- If stalled in snow, mud, or sand, use second gear. Accelerate slowly to avoid spinning the drive wheels.
- Use sand, rock salt, tire chains, or other non-slip material under the drive wheels to provide traction when stalled in ice, snow, or mud.

⚠ WARNING - Downshifting

Downshifting with an automatic transmission, while driving on slippery surfaces can cause an accident. The sudden change in tire speed could cause the tires to skid. Be careful when downshifting on slippery surfaces.

Reducing the risk of a rollover

This multi-purpose passenger vehicle is defined as a Sports Utility Vehicle (SUV).

SUV's have higher ground clearance and a narrower track to make them capable of performing in a wide variety of road applications. Specific design characteristics give them a higher center of gravity than ordinary vehicles. An advantage of the higher ground clearance is a better view of the road, which allows you to anticipate problems. They are not designed for cornering at the same speeds as conventional passenger vehicles. Due to this risk, driver and passengers are strongly recommended to buckle their seat belts. In a rollover crash, an unbelted person is more likely to die than a person wearing a seat belt. There are steps that a driver can make to reduce the risk of a rollover. If at all possible, avoid sharp turns or abrupt maneuvers, do not load your roof rack with heavy cargo, and never modify your vehicle in any way.

ON ENG 5.qxp 3/18/2019 2:47 PM Page 155

⚠ WARNING - Rollover

As with other Sports Utility Vehicle (SUV), failure to operate this vehicle correctly may result in loss of control, an accident or vehicle rollover.

- **Utility vehicles have a significantly higher rollover rate than other types of vehicles.**
- **Specific design characteristics (higher ground clearance, narrower track, etc.) give this vehicle a higher center of gravity than ordinary vehicles.**
- **A SUV is not designed for cornering at the same speeds as conventional vehicles.**
- **Avoid sharp turns or abrupt maneuvers.**
- **In a rollover crash, an unbelted person is significantly more likely to die than a person wearing a seat belt. Make sure everyone in the vehicle is properly buckled up.**

⚠ WARNING

Your vehicle is equipped with tires designed to provide safe ride and handling capability. Do not use a size and type of tire and wheel that is different from the one that is originally installed on your vehicle. It can affect the safety and performance of your vehicle, which could lead to steering failure or rollover and serious injury. When replacing the tires, be sure to equip all four tires with the tire and wheel of the same size, type, tread, brand and load-carrying capacity. If you nevertheless decide to equip your vehicle with any tire/wheel combination not recommended by Kia for off road driving, you should not use these tires for highway driving.

Rocking the vehicle

If it is necessary to rock the vehicle to free it from snow, sand, or mud, first turn the steering wheel right and left to clear the area around your front wheels. Then, R (Reverse) and any forward gear in vehicles equipped with an automatic transmission. Do not race the engine, and spin the wheels as little as possible. If you are still stuck after a few tries, have the vehicle pulled out by a tow vehicle to avoid engine overheating and possible damage to the transmission.

⚠ CAUTION

Prolonged rocking may cause engine over-heating, transmission damage or failure, and tire damage.

ON ENG 5.qxp 3/18/2019 2:47 PM Page 156

⚠ WARNING - Spinning tires

Do not spin the wheels, especially at speeds more than 56 km/h (35 mph). Spinning the wheels at high speeds when the vehicle is stationary could cause a tire to overheat which could result in tire damage that may injure bystanders.

✻ NOTICE

The ESC system should be turned OFF prior to rocking the vehicle.

⚠ WARNING

If your vehicle becomes stuck in snow, mud, sand, etc., then you may attempt to rock the vehicle free by moving it forward and backward. Do not attempt this procedure if people or objects are anywhere near the vehicle. During the rocking operation the vehicle may suddenly move forward or backward as it becomes unstuck, causing injury or damage to nearby people or objects.

Smooth cornering



Avoid braking or gear changing in corners, especially when roads are wet. Ideally, corners should always be taken under gentle acceleration. If you follow these suggestions, tire wear will be held to a minimum.

ON ENG 5.qxp 3/18/2019 2:47 PM Page 157

Driving at night


OON058067L

Because night driving presents more hazards than driving in the daylight, here are some important tips to remember:

- Slow down and keep more distance between you and other vehicles, as it may be more difficult to see at night, especially in areas where there may not be any street lights.
- Adjust your mirrors to reduce the glare from other driver's headlights.
- Keep your headlights clean and properly aimed on vehicles not equipped with the automatic headlight aiming feature. Dirty or improperly aimed headlights will make it much more difficult to see at night.
- Avoid staring directly at the headlights of oncoming vehicles. You could be temporarily blinded, and it will take several seconds for your eyes to readjust to the darkness.

Driving in the rain


OON058069L

Rain and wet roads can make driving dangerous, especially if you're not prepared for the slick pavement. Here are a few things to consider when driving in the rain:

- A heavy rainfall will make it harder to see and will increase the distance needed to stop your vehicle, so slow down.
- Keep your windshield wiping equipment in good shape. Replace your windshield wiper blades when they show signs of streaking or missing areas on the windshield.

ON ENG 5.qxp 3/18/2019 2:47 PM Page 158

- If your tires are not in good condition, making a quick stop on wet pavement can cause a skid and possibly lead to an accident. Be sure your tires are in good shape.
- Turn on your headlights to make it easier for others to see you.
- Driving too fast through large puddles can affect your brakes. If you must go through puddles, try to drive through them slowly.
- If you believe you may have gotten your brakes wet, apply them lightly while driving until normal braking operation returns.

Driving in flooded areas

Avoid driving through flooded areas unless you are sure the water is no higher than the bottom of the wheel hub. Drive through any water slowly. Allow adequate stopping distance because brake performance may be affected.

After driving through water, dry the brakes by gently applying them several times while the vehicle is moving slowly.

Driving off-road

Drive carefully off-road because your vehicle may be damaged by rocks of roots of trees. Become familiar with the off-road conditions where you are going to drive before you begin driving.

Highway driving

Tires

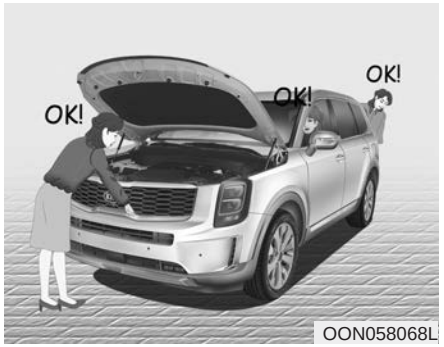

Adjust the tire inflation pressures to specification. Low tire inflation pressures will result in overheating and possible failure of the tires.

Avoid using worn or damaged tires which may result in reduced traction or tire failure.

✻ NOTICE

Never exceed the maximum tire inflation pressure shown on the tires.

ON ENG 5.qxp 3/18/2019 2:47 PM Page 159

⚠ WARNING

- **Underinflated or overinflated tires can cause poor handling, loss of vehicle control, and sudden tire failure leading to accidents, injuries, and even death. Always check the tires for proper inflation before driving. For proper tire pressures, refer to section 8, "Tires and wheels".**
- **Driving on tires with no or insufficient tread is dangerous. Worn-out tires can result in loss of vehicle control, collisions, injury, and even death. Worn-out tires should be replaced as soon as possible and should never be used for driving. Always check the tire tread before driving your vehicle. For further information and tread limits, refer to section 7, "Tires and wheels".**

Fuel, engine coolant and engine oil

High speed travel consumes more fuel than urban motoring. Do not forget to check both engine coolant and engine oil.

Drive belt

A loose or damaged drive belt may result in overheating of the engine.

ON ENG 5.qxp 3/18/2019 2:47 PM Page 160

WINTER DRIVING

Severe weather conditions in the winter result in greater wear and other problems. To minimize the problems of winter driving, you should follow these suggestions:

Snowy or Icy conditions

To drive your vehicle in deep snow, it may be necessary to use snow tires or to install tire chains on your tires. If snow tires are needed, it is necessary to select tires equivalent in size and type of the original equipment tires. Failure to do so may adversely affect the safety and handling of your vehicle. Furthermore, speeding, rapid acceleration, sudden brake applications, and sharp turns are potentially very hazardous practices.

During deceleration, use engine braking to the fullest extent. Sudden brake applications on snowy or icy roads may cause skids to occur. You need to keep sufficient distance between the vehicle in operation in front and your vehicle. Also, apply the brake gently. It should be noted that installing tire chains on the tire will provide a greater driving force, but will not prevent side skids.

✻ NOTICE

Tire chains are not legal in all countries. Check the country laws before fitting tire chains.

Snow tires

If you mount snow tires on your vehicle, make sure they are radial tires of the same size and load range as the original tires. Mount snow tires on all four wheels to balance your vehicle's handling in all weather conditions. Keep in mind that the traction provided by snow tires on dry roads may not be as high as your vehicle's original equipment tires. You should drive cautiously even when the roads are clear. Check with the tire dealer for maximum speed recommendations.

⚠ WARNING - Snow tire size

Snow tires should be equivalent in size and type to the vehicle's standard tires. Otherwise, the safety and handling of your vehicle may be adversely affected.

Do not install studded tires without first checking local, state and municipal regulations for possible restrictions against their use.

ON ENG 5.qxp 3/18/2019 2:47 PM Page 161

Tire chains



OON058070L

Since the sidewalls on some radial tires are thinner than other types of tires, they may be damaged by mounting certain types of tire chains on them. Therefore, the use of snow tires is recommended instead of tire chains. Do not mount tire chains on vehicles equipped with aluminum wheels; if unavoidable, use AutoSock (fabric snow chain). Install the tire chain after reviewing the instructions provided with the tire chains.

Damage to your vehicle caused by improper tire chain use is not covered by your vehicle manufacturer's warranty.

✻ NOTICE

- **Install AutoSock (fabric snow chain) on the front tires for FWD vehicles or for AWD vehicles. It should be noted that installing AutoSock (fabric snow chain) on the tires will provide a greater driving force, but will not prevent side skids.**
- **Do not install studded tires without first checking local and municipal regulations for possible restrictions against their use.**

⚠ CAUTION

When using AutoSock (fabric snow chain):

- ***Wrong size chains or improperly installed chains can damage your vehicle's brake lines, suspension, body and wheels.***
- ***If you hear noise caused by chains contacting the body, retighten the chain to prevent contact with the vehicle body.***
- ***To prevent body damage, retighten the chains after driving 0.5~1.0 km (0.3~0.6 miles).***

ON ENG 5.qxp 3/18/2019 2:47 PM Page 162

Chain installation

When installing AutoSock (fabric snow chain), follow the manufacturer's instructions and mount them as tightly possible. Drive slowly (less than 30 km/h (20 mph)) with chains installed. If you hear the chains contacting the body or chassis, stop and tighten them. If they still make contact, slow down until the noise stops.

Remove the AutoSock (fabric snow chain) as soon as you begin driving on cleared roads.

⚠ WARNING - Mounting chains

When mounting snow chains, park the vehicle on level ground away from traffic. Turn on the vehicle Hazard Warning flashers and place a triangular emergency warning device behind the vehicle if available. Always place the vehicle in P (Park), apply the parking brake and turn off the engine before installing snow chains.

⚠ WARNING - Tire chains

- **The use of chains may adversely affect vehicle handling.**
- **Do not exceed 30 km/h (20 mph) or the chain manufacturer's recommended speed limit, whichever is lower.**
- **Drive carefully and avoid bumps, holes, sharp turns, and other road hazards, which may cause the vehicle to bounce.**
- **Avoid sharp turns or locked-wheel braking.**

⚠ CAUTION

- ***Chains that are the wrong size or improperly installed can damage your vehicle's brake lines, suspension, body and wheels.***
- ***Stop driving and retighten the chains any time you hear them hitting the vehicle.***

ON ENG 5.qxp 3/18/2019 2:47 PM Page 163

Use high quality ethylene glycol coolant

Your vehicle is delivered with high quality ethylene glycol coolant in the cooling system. It is the only type of coolant that should be used because it helps prevent corrosion in the cooling system, lubricates the water pump and prevents freezing. Be sure to replace or replenish your coolant in accordance with the maintenance schedule in section 7. Before winter, have your coolant tested to assure that its freezing point is sufficient for the temperatures anticipated during the winter.

Check battery and cables

Winter puts additional burdens on the battery system. Visually inspect the battery and cables as described in section 7. Have the level of charge in your battery checked by a professional workshop. Kia recommends to visit an authorized Kia dealer/service partner.

Change to "winter weight" oil if necessary

In some climates it is recommended that a lower viscosity "winter weight" oil be used during cold weather. See section 8 for recommendations. If you aren't sure what weight oil you should use, Kia recommends to consult an authorized Kia dealer/service partner.

Check spark plugs and ignition system

Inspect your spark plugs as described in section 7 and replace them if necessary. Also check all ignition wiring and components to be sure they are not cracked, worn or damaged in any way.

To keep locks from freezing

To keep the locks from freezing, squirt an approved de-icer fluid or glycerine into the key opening. If a lock is covered with ice, squirt it with an approved de-icing fluid to remove the ice. If the lock is frozen internally, you may be able to thaw it out by using a heated key. Handle the heated key with care to avoid injury.

Use approved window washer anti-freeze in system

To keep the water in the window washer system from freezing, add an approved window washer anti-freeze solution in accordance with instructions on the container. Window washer anti-freeze is available from an authorized Kia dealer/service partner and most auto parts outlets. Do not use engine coolant or other types of anti-freeze as these may damage the paint finish.

ON ENG 5.qxp 3/18/2019 2:47 PM Page 164

Don't let your parking brake freeze

Under some conditions your parking brake can freeze in the engaged position. This is most likely to happen when there is an accumulation of snow or ice around or near the rear brakes or if the brakes are wet. If there is a risk the parking brake may freeze, apply it only temporarily while you put the shift lever in P (automatic transmission) and block the rear wheels so the vehicle cannot roll. Then release the parking brake.

Don't let ice and snow accumulate underneath

Under some conditions, snow and ice can build up under the fenders and interfere with the steering. When driving in severe winter conditions where this may happen, you should periodically check underneath the vehicle to be sure the movement of the front wheels and the steering components is not obstructed.

Carry emergency equipment

Depending on the severity of the weather, you should carry appropriate emergency equipment. Some of the items you may want to carry include tire chains, tow straps or chains, flashlight, emergency flares, sand, shovel, jumper cables, window scraper, gloves, ground cloth, coveralls, blanket, etc.

ON ENG 5.qxp 3/18/2019 2:47 PM Page 165

VEHICLE WEIGHT

This section will guide you in the proper loading of your vehicle and/or trailer, to keep your loaded vehicle weight within its design rating capability, with or without a trailer. Properly loading your vehicle will provide maximum return of the vehicle design performance. Before loading your vehicle, familiarize yourself with the following terms for determining your vehicle's weight ratings, with or without a trailer, from the vehicle's specifications and the certification label:

Base curb weight

This is the weight of the vehicle including a full tank of fuel and all standard equipment. It does not include passengers, cargo, or optional equipment.

Vehicle curb weight

This is the weight of your new vehicle when you picked it up from your dealer plus any aftermarket equipment.

Cargo weight

This figure includes all weight added to the Base Curb Weight, including cargo and optional equipment.

GAW (Gross axle weight)

This is the total weight placed on each axle (front and rear) - including vehicle curb weight and all payload.

GAWR (Gross axle weight rating)

This is the maximum allowable weight that can be carried by a single axle (front or rear). These numbers are shown on the certification label.

The total load on each axle must never exceed its GAWR.

GVW (Gross vehicle weight)

This is the Base Curb Weight plus actual Cargo Weight plus passengers.

GVWR (Gross vehicle weight rating)

This is the maximum allowable weight of the fully loaded vehicle (including all options, equipment, passengers and cargo). The GVWR is shown on the certification label.

Overloading

⚠ WARNING - Vehicle weight

The gross axle weight rating (GAWR) and the gross vehicle weight rating (GVWR) for your vehicle are on the certification label attached to the driver's (or front passenger's) door. Exceeding these ratings can cause an accident or vehicle damage. You can calculate the weight of your load by weighing the items (and people) before putting them in the vehicle. Be careful not to overload your vehicle.

ON ENG 6.qxp 3/18/2019 2:48 PM Page 1

What to do in an emergency

Road warning 6-2
- **Hazard warning flasher 6-2**

In case of an emergency while driving 6-3
- **If the engine stalls at a crossroad or crossing 6-3**
- **If you have a flat tire while driving 6-3**
- **If engine stalls while driving 6-3**

If the engine will not start 6-4
- **If engine doesn't turn over or turns over slowly 6-4**
- **If engine turns over normally but does not start 6-4**

Emergency starting 6-5
- **Jump starting 6-5**
- **Push-starting 6-7**

If the engine overheats 6-8

Tire Pressure Monitoring System (TPMS) 6-9
- **Check tire pressure 6-9**
- **Low tire pressure telltale 6-11**
- **Low tire pressure position telltale 6-11**
- **TPMS (Tire Pressure Monitoring System) malfunction indicator 6-12**
- **Changing a tire with TPMS 6-13**

If you have a flat tire (with spare tire) 6-16
- **Jack and tools 6-16**
- **Removing the spare tire 6-17**
- **Storing the spare tire 6-18**
- **Changing tires 6-18**
- **Jack label 6-26**
- **EC Declaration of Conformity for Jack 6-27**

Towing 6-28
- **Towing service 6-28**
- **Removable towing hook 6-29**
- **Emergency towing 6-30**

Emergency Commodity 6-33
- **Fire extinguisher 6-33**
- **First aid kit 6-33**
- **Triangle reflector 6-33**
- **Tire pressure gauge 6-33**

ON ENG 6.qxp 3/18/2019 2:48 PM Page 2

ROAD WARNING

Hazard warning flasher

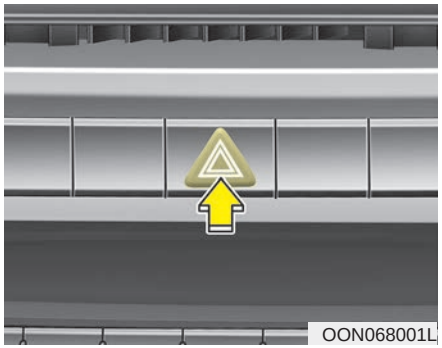

The hazard warning flasher serves as a warning to other drivers to exercise extreme caution when approaching, overtaking, or passing your vehicle.

It should be used whenever emergency repairs are being made or when the vehicle is stopped near the edge of a roadway.

Depress the flasher switch with the Engine Start/Stop button in any position. The flasher switch is located in the center console switch panel. All turn signal lights will flash simultaneously.

- The hazard warning flasher operates whether your vehicle is running or not.
- The turn signals do not work when the hazard flasher is on.
- Care must be taken when using the hazard warning flasher while the vehicle is being towed.

ON ENG 6.qxp 3/18/2019 2:48 PM Page 3

IN CASE OF AN EMERGENCY WHILE DRIVING

If the engine stalls at a crossroad or crossing

- If the engine stalls at a crossroad or crossing, set the shift lever in the N (Neutral) position and then push the vehicle to a safe place.

If you have a flat tire while driving

If a tire goes flat while you are driving:

1. Take your foot off the accelerator pedal and let the vehicle slow down while driving straight ahead. Do not apply the brakes immediately or attempt to pull off the road as this may cause a loss of control. When the vehicle has slowed down to such a speed that it is safe to do so, brake carefully and pull off the road. Drive off the road as far as possible and park on a firm level ground. If you are on a divided highway, do not park in the median area between the two traffic lanes.
2. When the vehicle is stopped, turn on your emergency hazard flashers, set the parking brake.
3. Have all passengers get out of the vehicle. Be sure they all get out on the side of the vehicle that is away from traffic.
4. When changing a flat tire, follow the instruction provided later in this section.

If engine stalls while driving

1. Reduce your speed gradually, keeping a straight line. Move cautiously off the road to a safe place.
2. Turn on your emergency flashers.
3. Try to start the engine again. If your vehicle does not start, consult a professional workshop. Kia recommends to consult an authorized Kia dealer/service partner.

ON ENG 6.qxp 3/18/2019 2:48 PM Page 4

IF THE ENGINE WILL NOT START

If engine doesn't turn over or turns over slowly

1. Check the battery connections to be sure they are clean and tight.
2. Turn on the interior light. If the light dims or goes out when you operate the starter, the battery is discharged.
3. Check the starter connections to be sure they are securely tightened.
4. Do not push or pull the vehicle to start it. See instructions for "Jump starting".

⚠ WARNING

If the engine will not start, do not push or pull the vehicle to start it. This could result in a collision or cause other damage. In addition, push or pull starting may cause the catalytic converter to be overloaded and create a fire hazard.

If engine turns over normally but does not start

1. Check the fuel level.
2. With the Engine Start/Stop button in the OFF position, check all connectors at the ignition coils and spark plugs. Reconnect any that may be disconnected or loose.
3. Check the fuel line in the engine compartment.
4. If the engine still does not start, call a professional workshop. Kia recommends to call an authorized Kia dealer/service partner.

ON ENG 6.qxp 3/18/2019 2:48 PM Page 5

EMERGENCY STARTING

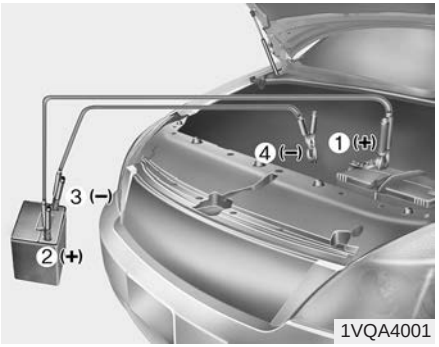

Connect cables in numerical order and disconnect in reverse order.

Jump starting

Jump starting can be dangerous if done incorrectly. Therefore, to avoid harm to yourself or damage to your vehicle or battery, follow the jump starting procedures. If in doubt, we strongly recommend that you have a competent technician or towing service jump start your vehicle.

⚠ CAUTION

Use only a 12-volt jumper system. You can damage a 12-volt starting motor, ignition system, and other electrical parts beyond repair by use of a 24-volt power supply (either two 12-volt batteries in series or a 24-volt motor generator set).

⚠ WARNING - Battery

Never attempt to check the electrolyte level of the battery as this may cause the battery to rupture or explode causing serious injury.

⚠ WARNING - Battery

- **Keep all flames or sparks away from the battery. The battery produces hydrogen gas which may explode if exposed to flame or sparks.**

  If these instructions are not followed exactly, serious personal injury and damage to the vehicle may occur! If you are not sure how to follow this procedure, seek qualified assistance. Automobile batteries contain sulfuric acid. This is poisonous and highly corrosive. When jump starting, wear protective glasses and be careful not to get acid on yourself, your clothing or on the vehicle.

(Continued)

ON ENG 6.qxp 3/18/2019 2:48 PM Page 6

(Continued)

- **Do not attempt to jump start the vehicle if the discharged battery is frozen or if the electrolyte level is low; the battery may rupture or explode.**
- **Do not allow the (+) and (-) jumper cables to touch. It may cause sparks.**
- **The battery may rupture or explode when you jump start with a low or frozen battery.**

Jump starting procedure

1. Make sure the booster battery is 12-volt and that its negative terminal is grounded.
2. If the booster battery is in another vehicle, do not allow the vehicles come in contact.
3. Turn off all unnecessary electrical loads.
4. Open the engine hood and remove the service cover on the front passenger seat side in the engine compartment.
5. Remove the fuse box cover on the front passenger seat side in the engine compartment
6. Open the positive terminal cap inside the engine room fuse box and the negative terminal cap close to the vehicle body.
7. Connect the jumper cables in the exact sequence shown in the illustration. First connect one end of a jumper cable to the positive terminal of the discharged battery (1), then connect the other end to the positive terminal on the booster battery (2).

   Proceed to connect one end of the other jumper cable to the negative terminal of the booster battery (3), then the other end to a solid, stationary, metallic point (for example, the engine lifting bracket) away from the battery (4). Do not connect it to or near any part that moves when the engine is cranked.

   Do not allow the jumper cables to contact anything except the correct battery terminals or the correct ground. Do not lean over the battery when making connections.

ON ENG 6.qxp 3/18/2019 2:48 PM Page 7

⚠ CAUTION - Battery cables

Do not connect the jumper cable from the negative terminal of the booster battery to the negative terminal of the discharged battery. This can cause the discharged battery to overheat and crack, releasing battery acid.

Make sure to connect one end of the jumper cable to the negative terminal of the booster battery, and the other end to a metallic point, far away from the battery.

8. Start the engine of the vehicle with the booster battery and let it run at 2,000 rpm, then start the engine of the vehicle with the discharged battery.

If the cause of your battery discharging is not apparent, have the system checked by a professional workshop. Kia recommends to visit an authorized Kia dealer/service partner.

Push-starting

Vehicles equipped with automatic transmission cannot be push-started.

Follow the directions in this section for jump-starting.

⚠ WARNING

Never tow a vehicle to start it because the sudden surge forward when the engine starts could cause a collision with the tow vehicle.

ON ENG 6.qxp 3/18/2019 2:48 PM Page 8

IF THE ENGINE OVERHEATS

If your temperature gauge indicates overheating, you will experience a loss of power, or hear loud pinging or knocking, the engine is probably too hot. If this happens, you should:

1. Pull off the road and stop as soon as it is safe to do so.
2. Place the shift lever in P and set the parking brake. If the air conditioning is on, turn it off.
3. If engine coolant is running out under the vehicle or steam is coming out from the hood, stop the engine. Do not open the hood until the coolant has stopped running or the steaming has stopped. If there is no visible loss of engine coolant and no steam, leave the engine running and check to be sure the engine cooling fan is operating. If the fan is not running, turn the engine off.
4. Check to see if the water pump drive belt is missing. If it is not missing, check to see that it is tight.

   If the drive belt seems to be satisfactory, check for coolant leaking from the radiator, hoses or under the vehicle. (If the air conditioning had been in use, it is normal for cold water to be draining from it when you stop).

⚠ WARNING

While the engine is running, keep hair, hands and clothing away from moving parts such as the fan and drive belts to prevent injury.

5. If the water pump drive belt is broken or engine coolant is leaking out, stop the engine immediately and call a professional workshop. Kia recommends to call an authorized Kia dealer/service partner.

⚠ WARNING

Do not remove the radiator cap when the engine is hot. This can allow coolant to blow out of the opening and cause serious burns.

6. If you cannot find the cause of the overheating, wait until the engine temperature has returned to normal. Then, if coolant has been lost, carefully add coolant to the reservoir to bring the fluid level in the reservoir up to the halfway mark.
7. Proceed with caution, keeping alert for further signs of overheating. If overheating happens again, call a professional workshop. Kia recommends to call an authorized Kia dealer/service partner.

⚠ CAUTION

- ***Serious loss of coolant indicates there is a leak in the cooling system. In this case, have the system checked by a professional workshop. Kia recommends to visit an authorized Kia dealer/service partner.***
- ***When the engine overheats from low engine coolant, suddenly adding engine coolant may cause cracks in the engine. To prevent damage, add engine coolant slowly in small quantities.***

ON ENG 6.qxp 3/18/2019 2:48 PM Page 9

TIRE PRESSURE MONITORING SYSTEM (TPMS)

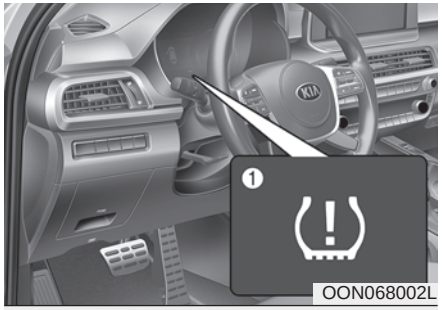

(1) Low tire pressure telltale / TPMS malfunction indicator

(2) Low tire pressure position telltale (Shown on the LCD display)

Check tire pressure

- You can check the tire pressure in the assist mode on the cluster.
  - Refer to “LCD mode” in chapter 4.
- Tire pressure is displayed 1~2 minutes later after driving.
- If tire pressure is not displayed when the vehicle is stopped, “Drive to display” message displays. After driving, check the tire pressure.
- You can change the tire pressure unit in the user settings mode on the cluster.
  - psi, kpa, bar (Refer to “User settings mode” in chapter 4).

Each tire, including the spare (if provided), should be checked monthly when cold and inflated to the inflation pressure recommended by the vehicle manufacturer on the vehicle placard or tire inflation pressure label.

(If your vehicle has tires of a different size than the size indicated on the vehicle placard or tire inflation pressure label, you should determine the proper tire inflation pressure for those tires.)

As an added safety feature, your vehicle has been equipped with a tire pressure monitoring system (TPMS) that illuminates a low tire pressure telltale when one or more of your tires is significantly under-inflated. Accordingly, when the low tire pressure telltale illuminates, you should stop and check your tires as soon as possible, and inflate them to the proper pressure. Driving on a significantly under-inflated tire causes the tire to overheat and can lead to tire failure. Under-inflation also reduces fuel efficiency and tire tread life, and may affect the vehicle’s handling and stopping ability.

ON ENG 6.qxp 3/18/2019 2:48 PM Page 10

Please note that the TPMS is not a substitute for proper tire maintenance, and it is the driver's responsibility to maintain correct tire pressure, even if under-inflation has not reached the level to trigger illumination of the TPMS low tire pressure telltale.

Your vehicle has also been equipped with a TPMS malfunction indicator to indicate when the system is not operating properly. The TPMS malfunction indicator is combined with the low tire pressure telltale. When the system detects a malfunction, the telltale will flash for approximately 1 minute and then remain continuously illuminated. This sequence will continue upon subsequent vehicle start-ups as long as the malfunction exists. When the TPMS malfunction indicator remains illuminated after blinking for approximately 1 minute, the system may not be able to detect or signal low tire pressure as intended.

TPMS malfunctions may occur for a variety of reasons, including the installation of replacement or alternate tires or wheels on the vehicle that prevent the TPMS from functioning properly. Always check the TPMS malfunction telltale after replacing one or more tires or wheels on your vehicle to ensure that the replacement or alternate tires and wheels allow the TPMS to continue to function properly.

✻ NOTICE

If any of the below happens, have the system checked by a professional workshop. Kia recommends to visit an authorized Kia dealer/service partner.

1. **The low tire pressure telltale/ TPMS malfunction indicator do not illuminate for 3 seconds when the Engine Start/Stop button is turned to the ON position or engine is running.**
2. **The TPMS malfunction indicator remains illuminated after blinking for approximately 1 minute.**
3. **The Low tire pressure position telltale remains illuminated.**

ON ENG 6.qxp 3/18/2019 2:48 PM Page 11

Low tire pressure telltale

Low tire pressure position telltale



OON068004L

When the tire pressure monitoring system warning indicators are illuminated and warning massage displayed on the cluster LCD display, one or more of your tires is significantly under-inflated. The low tire pressure position telltale light will indicate which tire is significantly under-inflated by illuminating the corresponding position light.

If either telltale illuminates, immediately reduce your speed, avoid hard cornering and anticipate increased stopping distances. You should stop and check your tires as soon as possible. Inflate the tires to the proper pressure as indicated on the vehicle's placard or tire inflation pressure label located on the driver's side center pillar outer panel. If you cannot reach a service station or if the tire cannot hold the newly added air, replace the low pressure tire with a spare tire.

If you drive the vehicle for about 10 minutes at speeds above 25 km/h after replaceing the low pressure tire with the spare tire, one of the following will happen:

- The TPMS malfunction indicator may blink for approximately 1 minute and then remain continuously illuminated because the TPMS sensor is not mounted on the spare wheel. (changed tire equipped with a sensor not in the vehicle)
- The TPMS malfunction indicator will remain continuously illuminated while driving because the TPMS sensor is not mounted on the spare wheel. (changed tire equipped with a sensor in the vehicle)

ON ENG 6.qxp 3/18/2019 2:48 PM Page 12

⚠ CAUTION

- ***In winter or cold weather, the low tire pressure telltale may illuminate if the tire pressure was adjusted to the recommended tire inflation pressure in warm weather. It does not mean your TPMS is malfunctioning because the decreased temperature leads to a lowering of tire pressure.***
- ***When you drive your vehicle from a warm area to a cold area or from a cold area to a warm area, or the outside temperature is higher or lower, you should check the tire inflation pressure and adjust the tires to the recommended tire inflation pressure.***

(Continued)

(Continued)

- ***When filling tires with more air, conditions to turn off the low tire pressure telltale may not be met. This is because a tire inflator has a margin of error in performance. The low tire pressure telltale will be turned off if the tire pressure is above the recommended tire inflation pressure.***

⚠ WARNING - Low pressure damage

Significantly low tire pressure makes the vehicle unstable and can contribute to loss of vehicle control and increased braking distances.

Continued driving on low pressure tires can cause the tires to overheat and fail.

TPMS (Tire Pressure Monitoring System) malfunction indicator

The TPMS malfunction indicator will illuminate after it blinks for approximately one minute when there is a problem with the Tire Pressure Monitoring System.

In this case, have the system checked by a professional workshop to determine the cause of the problem. Kia recommends to visit an authorized Kia dealer/service partner.

✻ NOTICE

If there is a malfunction with the TPMS, the low tire pressure position telltale will not be displayed even though the vehicle has an underinflated tire.

ON ENG 6.qxp 3/18/2019 2:48 PM Page 13

⚠ CAUTION

- ***The TPMS malfunction indicator may blink for approximately 1 minute and then remain continuously illuminated if the vehicle is moving around electric power supply cables or radios transmitter such as at police stations, government and public offices, broadcasting stations, military installations, airports, or transmitting towers, etc. This can interfere with normal operation of the Tire Pressure Monitoring System (TPMS).***

(Continued)

(Continued)

- ***The TPMS malfunction indicator may blink for approximately 1 minute and then remain continuously illuminated if snow chains are used or some separate electronic devices such as notebook computer, mobile charger, remote starter or navigation etc., are used in the vehicle.***

  This can interfere with normal operation of the Tire Pressure Monitoring System (TPMS).

Changing a tire with TPMS

If you have a flat tire, the low Tire Pressure and Position telltales will come on. In this case, have the system checked by a professional workshop. Kia recommends to visit an authorized Kia dealer/service partner.

⚠ CAUTION

We recommend that you use the sealant approved by Kia.

The sealant on the tire pressure sensor and wheel shall be eleminated when you replace the tire with a new one.

Each wheel is equipped with a tire pressure sensor mounted inside the tire behind the valve stem. You must use TPMS specific wheels. Have your tires serviced by a professional workshop. Kia recommends to visit an authorized Kia dealer/service partner.

ON ENG 6.qxp 3/18/2019 2:48 PM Page 14

If you drive the vehicle for about 10 minutes at speeds above 25 km/h after replacing the low pressure tire with the spare tire, one of the following will happen:

- The TPMS malfunction indicator may blink for approximately 1 minute and then remain continuously illuminated because the TPMS sensor is not mounted on the spare wheel. (changed tire equipped with a sensor not in the vehicle)
- The TPMS malfunction indicator will remain continuously illuminated while driving because the TPMS sensor is not mounted on the spare wheel. (changed tire equipped with a sensor in the vehicle)

You may not be able to identify a low tire by simply looking at it. Always use a good quality tire pressure gauge to measure the tire's inflation pressure. Please note that a tire that is hot (from being driven) will have a higher pressure measurement than a tire that is cold (from sitting stationary for at least 3 hours and driven less than 1.6 km (1 mile) during that 3 hour period).

Allow the tire to cool before measuring the inflation pressure. Always be sure the tire is cold before inflating to the recommended pressure.

A cold tire means the vehicle has been sitting for 3 hours and driven for less than 1.6 km (1 mile) in that 3 hour period.

⚠ WARNING - TPMS

- **The TPMS cannot alert you to severe and sudden tire damage caused by external factors such as nails or road debris.**
- **If you feel any vehicle instability, immediately take your foot off the accelerator, apply the brakes gradually and with light force, and slowly move to a safe position off the road.**

ON ENG 6.qxp 3/18/2019 2:48 PM Page 15

⚠ WARNING - Protecting TPMS

Tampering with, modifying, or disabling the Tire Pressure Monitoring System (TPMS) components may interfere with the system's ability to warn the driver of low tire pressure conditions and/or TPMS malfunctions. Tampering with, modifying, or disabling the Tire Pressure Monitoring System (TPMS) components may void the warranty for that portion of the vehicle.

⚠ WARNING - For EUROPE

- **Do not modify the vehicle, it may interfere with the TPMS function.**
- **The wheels on the market do not have a TPMS sensor.**

  For your safety, use parts for replacement from a professional workshop. Kia recommends to visit an authorized Kia dealer/service partner.
- **If you use the wheels on the market, use a TPMS sensor approved by an authorized Kia dealer.**

  If your vehicle is not equipped with a TPMS sensor or TPMS does not work properly, you may fail the periodic vehicle inspection conducted in your country.

(Continued)

(Continued)

❋ All vehicles sold in the EUROPE market during below period must be equipped with TPMS.

- New model vehicle : Nov. 1, 2012 ~

- Current model vehicle : Nov. 1, 2014~ (Based on vehicle registrations)

ON ENG 6.qxp 3/18/2019 2:48 PM Page 16

IF YOU HAVE A FLAT TIRE (WITH SPARE TIRE, IF EQUIPPED)

Jack and tools

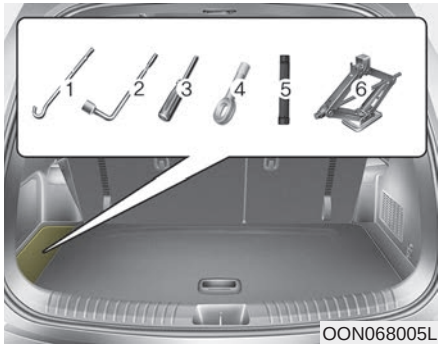

The jack is stored in the luggage compartment.

Remove the panel indicated in the illustration.

(1) Jack handle
(2) Wheel nut wrench
(3) Driver
(4) Towing hook
(5) Socket
(6) Jack

Jacking instructions

The jack is provided for emergency tire changing only.

To prevent the jack from “rattling” while the vehicle is in motion, store it properly.

Follow jacking instructions to reduce the possibility of personal injury.

⚠ WARNING - Changing tires

- **Never attempt vehicle repairs in the traffic lanes of a public road or highway.**
- **Always move the vehicle completely off the road and onto the shoulder before trying to change a tire. The jack should be used on firm level ground. If you cannot find a firm level place off the road, call a towing service company for assistance.**

(Continued)

(Continued)

- **Be sure to use the correct front and rear jacking positions on the vehicle; never use the bumpers or any other part of the vehicle for jacking support.**
- **The vehicle can roll off the jack causing serious injury or death.**
- **Do not get under a vehicle that is supported by a jack.**
- **Do not start or run the engine while the vehicle is on the jack.**
- **Do not allow anyone to remain in the vehicle while it is on the jack.**
- **Make sure any children present are in a secure place away from the road and from the vehicle to be raised with the jack.**

ON ENG 6.qxp 3/18/2019 2:48 PM Page 17

Removing the spare tire

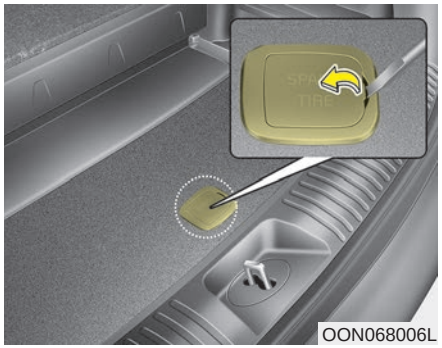
OON068006L

Your spare tire is stored underneath the back of your vehicle, directly below the right sliding door.

To remove the spare tire:

1. Open the luggage floor cover and find the plastic hex bolt cover on the floor.
2. Remove the cover.

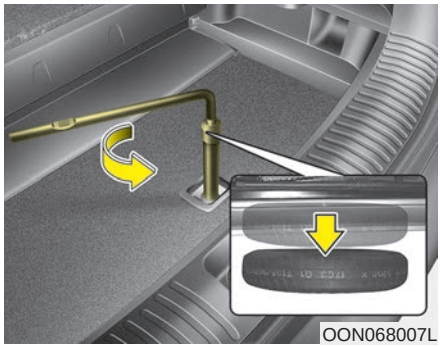
OON068007L

3. Use the tool to loosen the bolt enough to lower the spare tire.

   Turn the tool counterclockwise until the spare tire reaches the ground.

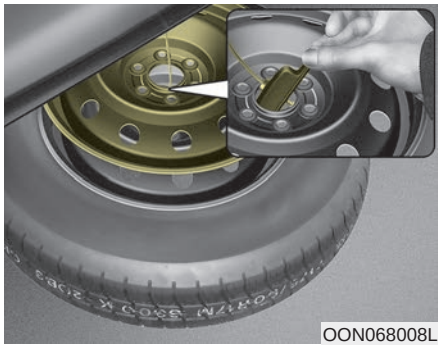
OON068008L

4. After the spare tire reaches the ground, continue to turn the tool counterclockwise, and draw the spare tire outside. Never rotate the tool excessively, otherwise the spare tire carrier may be damaged.
5. Remove the retainer from the center of the spare tire.

ON ENG 6.qxp 3/18/2019 2:48 PM Page 18

Storing the spare tire

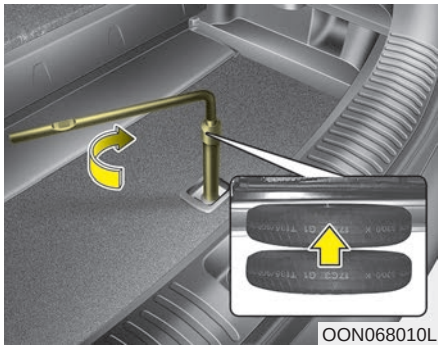

1. Place the wheel under the vehicle and install the retainer through the wheel center.
2. Turn the tool clockwise until it clicks.

Ensure the spare tire retainer is properly aligned with the center of the spare tire to prevent the spare tire from "rattling".

Otherwise, it may cause the spare tire to fall off the carrier and lead to an accident.

Changing tires

⚠ WARNING

A vehicle can slip or roll off of a jack causing serious injury or death to you or those nearby. Take the following safety precautions:

- **Never place any portion of your body under a vehicle that is supported by a jack.**
- **NEVER attempt to change a tire in the lane of traffic. ALWAYS move the vehicle completely off the road on level, firm ground away from traffic before trying to change a tire. If you annot find a level, firm place off the road, call a towing service for assistance.**
- **Be sure to use the jack provided with the vehicle.**

(Continued)

(Continued)

- **ALWAYS place the jack on the designated jacking positions on the vehicle and NEVER on the bumpers or any other part of the vehicle for jacking support.**
- **Do not start or run the engine while the vehicle is on the jack.**
- **Do not allow anyone to remain in the vehicle while it is on the jack.**
- **Keep children away from the road and the vehicle.**

ON ENG 6.qxp 3/18/2019 2:48 PM Page 19

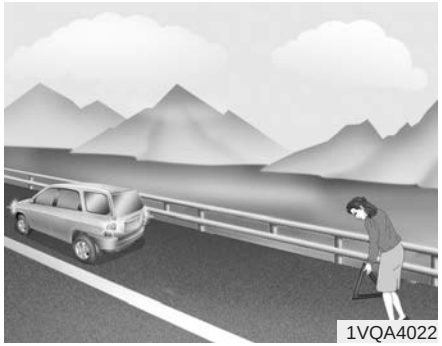
1VQA4022

1. Park on a level surface and apply the parking brake firmly.
2. Move the shift lever into P (Park) with Automatic Transmission.
3. Activate the hazard warning flasher.


1VQA4023

4. Remove the wheel lug nut wrench, jack, jack handle, and spare tire from the vehicle.
5. Block both the front and rear of wheel that is diagonally opposite the jack position.

⚠ WARNING - Changing a tire

- **To prevent vehicle movement while changing a tire, always set the parking brake fully, and always block the wheel diagonally opposite the wheel being changed.**
- **We recommend that the wheels of the vehicle be chocked, and that no person remain in a vehicle that is being jacked.**

ON ENG 6.qxp 3/18/2019 2:48 PM Page 20

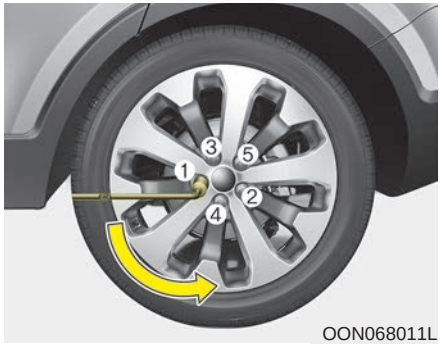

OON068011L

6. Loosen the wheel lug nuts counterclockwise one turn each, but do not remove any nut until the tire has been raised off the ground.

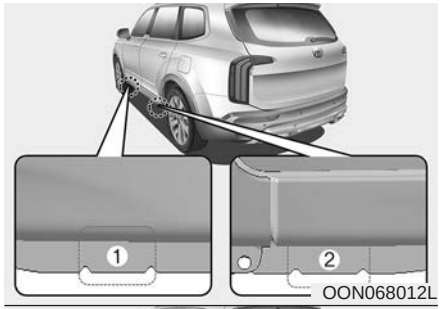

OON068012L

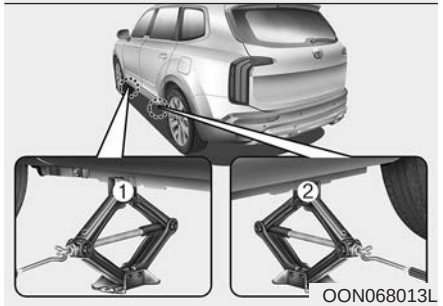

OON068013L

7. Place the jack at the front(1) or rear(2) jacking position closest to the tire you are changing. Place the jack at the designated locations under the frame. The jacking positions are plates welded to the frame with two tabs and a raised dot to index with the jack.

⚠ WARNING - Jack location

To reduce the possibility of injury, be sure to use only the jack provided with the vehicle and in the correct jack position; never use any other part of the vehicle for jack support.

ON ENG 6.qxp 3/18/2019 2:48 PM Page 21

8. Insert the jack handle into the jack and turn it clockwise, raising the vehicle until the tire just clears the ground. This measurement is approximately 30 mm (1.2 in). Before removing the wheel lug nuts, make sure the vehicle is stable and that there is no chance for movement or slippage.



OON068014L

9. Loosen the wheel nuts and remove them with your fingers. Slide the wheel off the studs and lay it flat so it cannot roll away. To put the wheel on the hub, pick up the spare tire, line up the holes with the studs and slide the wheel onto them.

   If this is difficult, tip the wheel slightly and get the top hole in the wheel lined up with the top stud. Then jiggle the wheel back and forth until the wheel can be slid over the other studs.

⚠ WARNING

Wheels may have sharp edges. Handle them carefully to avoid possible severe injury. Before putting the wheel into place, be sure that there is nothing on the hub or wheel (such as mud, tar, gravel, etc.) that interferes with the wheel from fitting solidly against the hub.

If there is, remove it. If there is not good contact on the mounting surface between the wheel and hub, the wheel nuts could come loose and cause the loss of a wheel. Loss of a wheel may result in loss of control of the vehicle. This may cause serious injury or death.

ON ENG 6.qxp 3/18/2019 2:48 PM Page 22

10. To reinstall the wheel, hold it on the studs, put the wheel nuts on the studs and tighten them finger tight. Jiggle the tire to be sure it is completely seated, then tighten the nuts as much as possible with your fingers again.
11. Lower the vehicle to the ground by turning the wheel nut wrench counterclockwise.

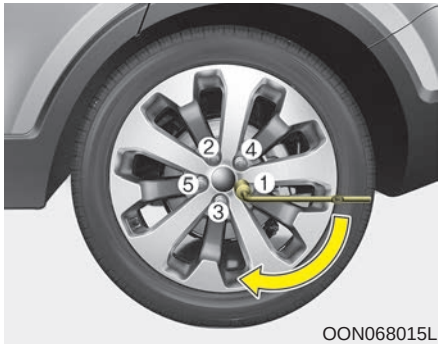

OON068015L

Then position the wrench as shown in the drawing and tighten the wheel nuts. Be sure the socket is seated completely over the nut. Do not stand on the wrench handle or use an extension pipe over the wrench handle. Go around the wheel tightening every other nut until they are all tight. Then double-check each nut for tightness. After changing wheels, have the system checked by a professional workshop. Kia recommends to visit an authorized Kia dealer/service partner.

Wheel nut tightening torque:

Steel wheel & aluminum alloy wheel: 11~13kgf·m (79~94lbf·ft)

ON ENG 6.qxp 3/18/2019 2:48 PM Page 23

If you have a tire gauge, remove the valve cap and check the air pressure. If the pressure is lower than recommended, drive slowly to the nearest service station and inflate to the correct pressure. If it is too high, adjust it until it is correct. Always reinstall the valve cap after checking or adjusting tire pressure. If the cap is not replaced, air may leak from the tire. If you lose a valve cap, buy another and install it as soon as possible.

After you have changed wheels, always secure the flat tire in its place and return the jack and tools to their proper storage locations.

⚠ CAUTION

Your vehicle has metric threads on the wheel studs and nuts. Make certain during wheel removal that the same nuts that were removed are reinstalled - or, if replaced, that nuts with metric threads and the same chamfer configuration are used. Installation of a non-metric thread nut on a metric stud or vice-versa will not secure the wheel to the hub properly and will damage the stud so that it must be replaced.

Note that most lug nuts do not have metric threads. Be sure to use extreme care in checking for thread style before installing aftermarket lug nuts or wheels. If in doubt, consult a professional workshop. Kia recommends to consult an authorized Kia dealer/service partner.

⚠ WARNING - Wheel studs

If the studs are damaged, they may lose their ability to retain the wheel. This could lead to the loss of the wheel and a collision resulting in serious injuries.

To prevent the jack, jack handle, wheel lug nut wrench and spare tire from rattling while the vehicle is in motion, store them properly.

ON ENG 6.qxp 3/18/2019 2:48 PM Page 24

⚠ WARNING - Inadequate spare tire pressure

Check the inflation pressures as soon as possible after installing the spare tire. Adjust it to the specified pressure, if necessary. Refer to "Tires and wheels" in chapter 8.

Important - use of compact spare tire (if equipped)

Your vehicle is equipped with a compact spare tire. This compact spare tire takes up less space than a regular-size tire. This tire is smaller than a conventional tire and is designed for temporary use only.

⚠ CAUTION

- ***You should drive carefully when the compact spare is in use. The compact spare should be replaced by the proper conventional tire and rim at the first opportunity.***
- ***The operation of this vehicle is not recommended with more than one compact spare tire in use at the same time.***

⚠ WARNING

The compact spare tire is for emergency use only. Do not operate your vehicle on this compact spare at the speed over 80 km/h (50 mph). The original tire should be repaired or replaced as soon as possible to avoid failure of the spare possibly leading to personal injury or death.

The compact spare should be inflated to 420 kPa (60 psi).

✻ NOTICE

Check the inflation pressure after installing the spare tire. Adjust it to the specified pressure, as necessary.

ON ENG 6.qxp 3/18/2019 2:48 PM Page 25

When using a compact spare tire, observe the following precautions:

- Under no circumstances should you exceed 80 km/h (50 mph); a higher speed could damage the tire.
- Ensure that you drive slowly enough to avoid all hazards. Any road hazard, such as a pothole or debris, could seriously damage the compact spare.
- Any continuous road use of this tire could result in tire failure, loss of vehicle control, and possible personal injury.
- Do not exceed the vehicle's maximum load rating or the load-carrying capacity shown on the sidewall of the compact spare tire.
- Avoid driving over obstacles. The compact spare tire diameter is smaller than the diameter of a conventional tire and reduces the ground clearance approximately 2.5 cm (1 inch), which could result in damage to the vehicle.
- Do not take the vehicle through an automatic car wash while the compact spare tire is installed.
- Do not use tire chains on the temporary compact tire. Because of the smaller size, a tire chain will not fit properly. This could damage the vehicle and result in loss of the chain.
- Temporary compact tire should not be installed on the front axle if the vehicle must be driven in snow or on ice.
- Do not use the temporary compact tire on any other vehicle because this tire has been designed especially for your vehicle.
- The temporary compact tire tread life is shorter than a regular tire. Inspect your temporary compact tire regularly and replace worn compact spare tires with the same size and design, mounted on the same wheel.
- The temporary compact tire should not be used on any other wheels, nor should standard tires, snow tires, wheel covers or trim rings be used with the temporary compact spare wheel. If such use is attempted, damage to these items or other car components may occur.
- Do not use more than one temporary compact tire at a time.
- Do not tow a trailer while the temporary compact tire is installed.

ON ENG 6.qxp 3/18/2019 2:49 PM Page 26

Jack label

■ Example

• Type A

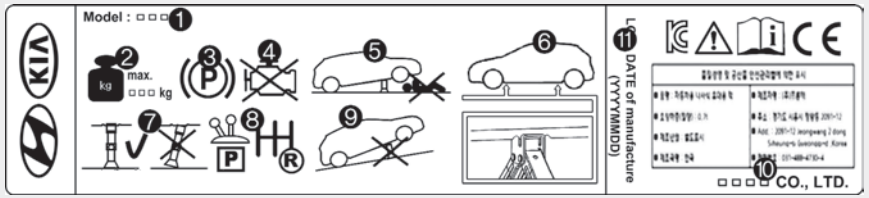

OHYK064001

• Type B

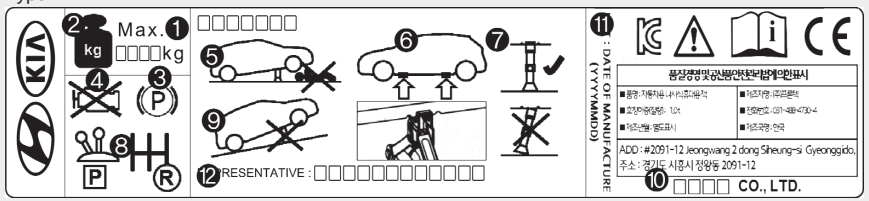

OHYK064005

• Type C



OHYK064002

❊ The actual Jack label in the vehicle may differ from the illustration.
For more detailed specifications, refer to the label attached to the jack.

1. Model Name
2. Maximum allowable load
3. When using the jack, set your parking brake.
4. When using the jack, stop the engine.
5. Do not get under a vehicle that is supported by a jack.
6. The designated locations under the frame
7. When supporting the vehicle, the base plate of jack must be vertical under the lifting point.
8. Shift into Reverse gear on vehicles with manual transmission.
9. The jack should be used on firm level ground.
10. Jack manufacturer
11. Production date
12. Representative company and address

ON ENG 6.qxp 3/18/2019 2:49 PM Page 27

EC Declaration of Conformity for Jack

CE

EC Declaration of Conformity
according to EC Machinery Directive 2006/42/EC

We, **SAMKI IND. CO., LTD.**
 # 22, Hyojuk3-Gil, Buk-Gu, Ulsan, Korea
declare under our sole responsibility that the product

Product : Jack Assembly
Type Designation(s) : Jack Assembly-600kg, Jack Assembly-700kg
Jack Assembly-800kg, Jack Assembly-1000kg
Jack Assembly-1200kg, Jack Assembly-1500kg
Serial No. : N/A
Year of Manufacture : 2013
to which this declaration relates is in conformity with the following standard(s) or other normative document(s);

EN ISO12100 (2010)	Safety of machinery - General principles for design – Risk assessment and risk reduction
EN ISO12100-2/A1 (2009)	Safety of machinery - Basic concepts, general principles for design, Part 2 : Technical principles
EN 1494/A1 (2008)	Mobile or movable jacks and associated lifting equipment

following the provisions of Directive(s);

2006/42/EC	Directive on the approximation of the laws of Member States relating to machinery (OJ L157 Jun, 9, 2006)

Ulsan , Korea / Jul .25 .2013 Hyun Duck, Cho President
(Place and date of issue)(name and signature or equivalent making of authorized person)

* T.C.F Compiling Person: **Safenet Limited (European Notified body : 1674)**
Denford Garage, Denford, Kettering Northants, NN14 4EQ, England

JACKDOC14S

ON ENG 6.qxp 3/18/2019 2:49 PM Page 28

TOWING

Towing service

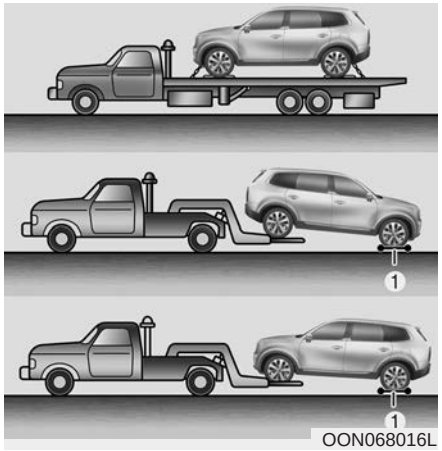

OON068016L

If emergency towing is necessary, we recommend having it done by an authorized Kia dealer or a commercial tow-truck service. Proper lifting and towing procedures are necessary to prevent damage to the vehicle. The use of wheel dollies (1) or flatbed is recommended.

It is acceptable to tow the vehicle with the rear wheels on the ground (without dollies) and the front wheels off the ground.

If any of the loaded wheels or suspension components are damaged or the vehicle is being towed with the front wheels on the ground, use a towing dolly under the front wheels.

When being towed by a commercial tow truck and wheel dollies are not used, the front of the vehicle should always be lifted, not the rear.

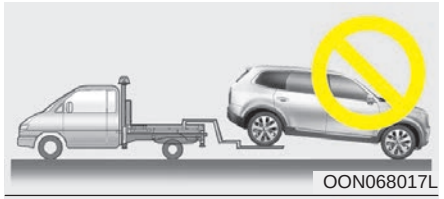
OON068017L

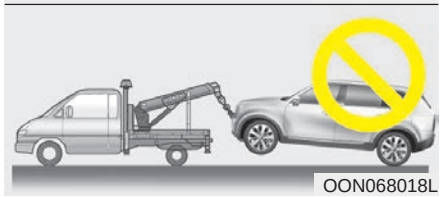
OON068018L

⚠ CAUTION

- ***Do not tow the vehicle backwards with the front wheels on the ground as this may cause damage to the vehicle.***
- ***Do not tow with sling-type equipment. Use wheel lift or flatbed equipment.***

ON ENG 6.qxp 3/18/2019 2:49 PM Page 29

When towing your vehicle in an emergency without wheel dollies :

1. Set the Engine Start/Stop button in the ACC position.
2. Place the transmission shift lever in N (Neutral).
3. Release the parking brake.

⚠ CAUTION

Failure to place the transmission shift lever in N (Neutral) may cause internal damage to the transmission.

Removable towing hook (if equipped)

■ Front

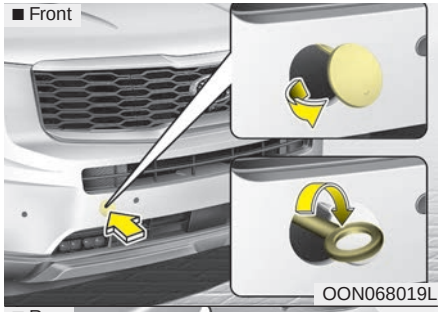

OON068019L

■ Rear

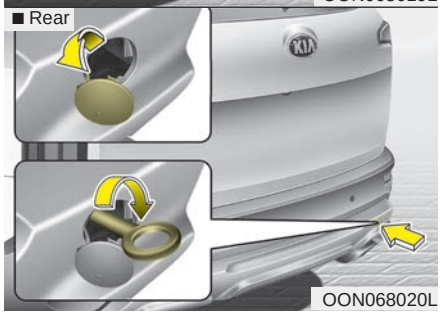

OON068020L

1. Open the tailgate, and remove the towing hook from the tool case.
2. Remove the hole cover pressing the triangle icon area of the cover on the bumper.
3. Install the towing hook by turning it clockwise into the hole until it is fully secured.
4. Remove the towing hook and install the cover after use.

ON ENG 6.qxp 3/18/2019 2:49 PM Page 30

Emergency towing

■ Front

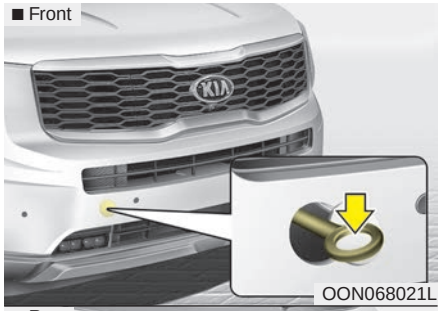

OON068021L

■ Rear

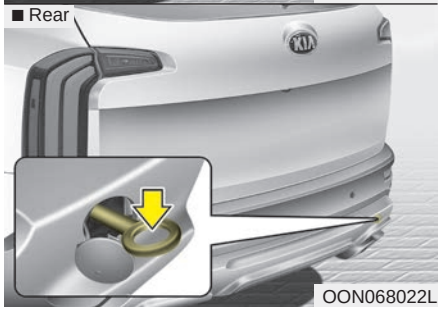

OON068022L

If towing is necessary, we recommend you to have it done by an authorized Kia dealer or a commercial tow truck service.

If towing service is not available in an emergency, your vehicle may be temporarily towed using a cable or chain secured to the emergency towing hook under the front (or rear) of the vehicle. Use extreme caution when towing the vehicle. A driver must be in the vehicle to steer it and operate the brakes.

Towing in this manner may be done only on hard-surfaced roads for a short distance and at low speed. Also, the wheels, axles, power train, steering and brakes must all be in good condition.

- Do not use the tow hooks to pull a vehicle out of mud, sand or other conditions from which the vehicle cannot be driven out under its own power.
- Avoid towing a vehicle heavier than the vehicle doing the towing.
- The drivers of both vehicles should communicate with each other frequently.

⚠ CAUTION

- ***Attach a towing strap to the tow hook.***
- ***Using a portion of the vehicle other than the tow hooks for towing may damage the body of your vehicle.***
- ***Use only a cable or chain specifically intended for use in towing vehicles. Securely fasten the cable or chain to the towing hook provided.***
- ***Accelerate or decelerate the vehicle in a slow and gradual manner whilst maintaining tension on the tow rope or chain to start or drive the vehicle, otherwise tow hooks and the vehicle may be damaged.***

ON ENG 6.qxp 3/18/2019 2:49 PM Page 31

- Before emergency towing, inspect the hook to ensure it is not broken or damaged.
- Fasten the towing cable or chain securely to the hook.
- Do not jerk the hook. Apply it steadily and with even force.
- To avoid damaging the hook, do not pull from the side or at a vertical angle. Always pull straight ahead.

⚠ WARNING

Use extreme caution when towing the vehicle.

- **Avoid sudden starts or erratic driving maneuvers which would place excessive stress on the emergency towing hook and towing cable or chain. The hook and towing cable or chain may break and cause serious injury or damage.**
- **If the disabled vehicle is unable to be moved, do not forcibly continue the towing. We recommend that you contact an authorized Kia dealer or a commercial tow truck service for assistance.**
- **Tow the vehicle as straight ahead as possible.**
- **Keep away from the vehicle during towing.**

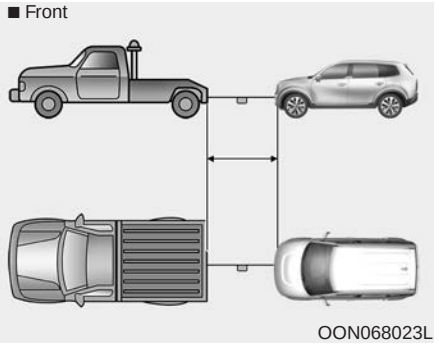

OON068023L

- Use a towing strap less than 5 m (16 feet) long. Attach a white or red cloth (about 30 cm (12 inches) wide) in the middle of the strap for easy visibility.
- Drive carefully so that the towing strap is not loosened during towing.
- The driver must be in the vehicle for steering and braking operations when the vehicle is towed and passengers other than the driver must not be allowed to be on board.

ON ENG 6.qxp 3/18/2019 2:49 PM Page 32

Emergency towing precautions

- Place the Engine start/stop button to ACC position so the steering wheel isn't locked.
- Place the transmission shift lever in N (Neutral).
- Release the parking bake.
- Press the brake pedal with more force than normal since you will have reduced brake performance.
- More steering effort will be required because the power steering system will be disabled.
- If you are driving down a long hill, the brakes may overheat and brake performance will be reduced. Stop often and let the brakes cool off.
- The vehicle should be towed at a speed of 25 km/h (15 mph) or less within the distance of 20 km (12 miles).

⚠ CAUTION
- Automatic transmission

- ***If the car is being towed with all four wheels on the ground, it can be towed only from the front. Be sure that the transmission is in neutral. Be sure the steering is unlocked by placing the Engine Start/Stop button in the ACC position. A driver must be in the towed vehicle to operate the steering and brakes.***
- ***To avoid serious damage to the automatic transmission, limit the vehicle speed to 15 km/h (10 mph) and drive less than 1.5 km (1 mile) when towing.***
- ***Before towing, check the automatic transmission for fluid leaks under your vehicle. If the automatic transmission fluid is leaking, flatbed equipment or a towing dolly must be used.***

ON ENG 6.qxp 3/18/2019 2:49 PM Page 33

EMERGENCY COMMODITY (IF EQUIPPED)

There are some emergency commodities in the vehicle to help you respond to the emergency situation.

Fire extinguisher

If there is small fire and you know how to use the fire extinguisher, take the following steps carefully.

1. Pull the pin at the top of the extinguisher that keeps the handle from being accidentally pressed.
2. Aim the nozzle toward the base of the fire.
3. Stand approximately 2.5 m (8 ft) away from the fire and squeeze the handle to discharge the extinguisher. If you release the handle, the discharge will stop.
4. Sweep the nozzle back and forth at the base of the fire. After the fire appears to be out, watch it carefully since it may re-ignite.

First aid kit

There are some items such as scissors, bandage, adhesive tape etc. in the kit to give first aid to an injured person.

Triangle reflector

Place the triangle reflector on the road to warn oncoming vehicles during emergencies, such as when the vehicle is parked by the roadside due to any problems.

Tire pressure gauge (If equipped)

Tires normally lose some air in day-to-day use, and you may have to add a few pounds of air periodically and it is not usually a sign of a leaking tire, but of normal wear. Always check tire pressure when the tires are cold because tire pressure increases with temperature.

To check the tire pressure, take the following steps;

1. Unscrew the inflation valve cap that is located on the rim of the tire.
2. Press and hold the gauge against the tire valve. Some air will escape as you begin and more will escape if you don't press the gauge in firmly.
3. A firm non-leaking push will activate the gauge.
4. Read the tire pressure on the gauge to know whether the tire pressure is low or high.
5. Adjust the tire pressures to the specified pressure. Refer to “Tires and wheels” in section 9.
6. Reinstall the inflation valve cap.

ON ENG 7.qxp 3/18/2019 3:00 PM Page 1

Maintenance

Engine compartment 7-4
Maintenance services 7-5
• Owner's responsibility 7-5
• Owner maintenance precautions 7-5
Owner maintenance 7-7
• Owner maintenance schedule 7-7
Scheduled maintenance service 7-9
• Scheduled maintenanceservice precaution 7-9
Explanation of scheduled maintenance items . . . 7-17
• Engine oil and filter. 7-17
• Drive belts 7-17
• Fuel filter (for gasoline) 7-17
• Fuel lines, fuel hoses and connections 7-18
• Vapor hose (for gasoline engine) and fuel filler cap. . 7-18
• Vacuum crankcase ventilation hoses 7-18
• Air cleaner filter 7-18
• Spark plugs (for gasoline engine) 7-18
• Valve clearance (for gasoline engine) 7-19
• Cooling system 7-19
• Coolant 7-19
• Automatic transmission fluid 7-19
• Brake hoses and lines 7-20
• Brake fluid 7-20
• Parking brake 7-20
• Brake discs, pads, calipers and rotors. 7-20
• Suspension mounting bolts 7-20
• Steering gear box, linkage & boots/lower arm ball joint 7-20
• Drive shafts and boots. 7-20
• Air conditioning refrigerant 7-20
Engine oil. 7-21
• Checking the engine oil level 7-21
• Changing the engine oil and filter 7-22
Engine coolant 7-23
• Checking the coolant level 7-23
• Changing the coolant 7-25
Brake fluid 7-26
• Checking the brake fluid level 7-26
Washer fluid 7-27
• Checking the washer fluid level 7-27
Parking brake 7-28
• Checking the parking brake. 7-28
Air cleaner. 7-29
• Filter replacement 7-29
Climate control air filter 7-31
• Filter inspection 7-31
• Filter replacement 7-31

ON ENG 7.qxp 3/18/2019 3:00 PM Page 2

Wiper blades 7-33
- Blade inspection 7-33
- Blade replacement 7-33

Battery 7-37
- For best battery service 7-37
- Battery capacity label 7-39
- Battery recharging 7-39
- Reset items 7-41

Tires and wheels 7-42
- Tire care 7-42
- Recommended cold tire inflation pressures 7-42
- Checking tire inflation pressure 7-43
- Tire rotation 7-44
- Wheel alignment and tire balance 7-45
- Tire replacement 7-46
- Wheel replacement 7-47
- Tire traction 7-48
- Tire maintenance 7-48
- Tire sidewall labeling 7-48
- Low aspect ratio tire 7-52

Fuses 7-54
- Inner panel fuse replacement 7-55
- Engine compartment fuse replacement 7-56
- Fuse/relay panel description 7-59

Light bulbs 7-72
- Bulb replacement precaution 7-72
- Light bulb position (Front) 7-74
- Light bulb position (Rear) 7-74
- Light bulb position (Side) 7-75
- Headlamp (Low/High)/Front turn signal lamp bulb replacement (Headlamp Type A) 7-76
- Headlamp (Low/High) / Position lamp / Daytime running lamp / Turn signal lamp (LED Type) bulb replacement (Headlamp Type B) 7-77
- Front fog lamp (LED type) bulb replacement 7-77
- Position lamp + DRL (LED type) bulb replacement (Headlamp Type A) 7-78
- Side repeater lamp bulb replacement 7-78
- Stop and tail lamp bulb replacement (Rear combination lamp Type A) 7-78
- Stop and tail lamp (LED type) bulb replacement (Rear combination lamp Type B) 7-79
- Back lamp bulb replacement 7-79
- Rear turn signal lamp (Bulb Type)/Fog lamp (LED Type) bulb replacement 7-80
- License plate lamp bulb replacement 7-80
- High mounted stop lamp bulb replacement 7-81
- Map lamp bulb replacement 7-81
- Map lamp (LED type) bulb replacement 7-82

ON ENG 7.qxp 3/18/2019 3:00 PM Page 3

• Vanity mirror lamp (LED type) bulb replacement . 7-82
• Room lamp (Bulb Type) bulb replacement. 7-82
• Room lamp (LED type) bulb replacement 7-83
• Glove box lamp bulb replacement 7-84
• Tailgate lamp (Bulb Type) bulb replacement 7-84
• Tailgate lamp (LED type) bulb replacement 7-85
Appearance care. 7-86
• Exterior care 7-86
• Interior care. 7-92
Emission control system 7-95
• Crankcase emission control system. 7-95
• Evaporative emission control system 7-95
• Exhaust emission control system 7-96

ON ENG 7.qxp 3/18/2019 3:00 PM Page 4

ENGINE COMPARTMENT

■ **Gasoline Engine (Lambda II 3.8L - GDI)**

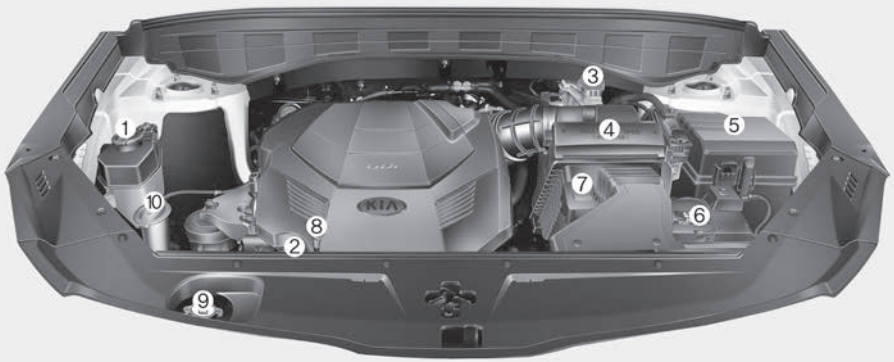

1. Engine coolant reservoir
2. Engine oil filler cap
3. Brake fluid reservoir
4. Air cleaner
5. Fuse box
6. Negative battery terminal
7. Positive battery terminal
8. Engine oil dipstick
9. Radiator cap
10. Windshield washer fluid reservoir

❈ The actual engine room in the vehicle may differ from the illustration.

OON078001L

ON ENG 7.qxp 3/18/2019 3:00 PM Page 5

MAINTENANCE SERVICES

You should exercise the utmost care to prevent damage to your vehicle and injury to yourself whenever performing any maintenance or inspection procedures.

Inadequate, incomplete or insufficient servicing may result in operational problems with your vehicle that could lead to vehicle damage, an accident, or personal injury.

Owner's responsibility

✻ NOTICE

Maintenance Service and Record Retention are the owner's responsibility.

Have your vehicle serviced by a professional workshop. Kia recommends to visit an authorized Kia dealer/service partner.

You should retain documents that show proper maintenance has been performed on your vehicle in accordance with the scheduled maintenance service charts shown on the following pages.

You need this information to establish your compliance with the servicing and maintenance requirements of your vehicle warranties.

Detailed warranty information is provided in your Warranty & Maintenance book.

Repairs and adjustments required as a result of improper maintenance or a lack of required maintenance are not covered when your vehicle is covered by warranty.

Owner maintenance precautions

Improper or incomplete service may result in problems. This section gives instructions only for the maintenance items that are easy to perform.

✻ NOTICE

Improper owner maintenance during the warranty period may affect warranty coverage. For details, read the separate Warranty & Maintenance book provided with the vehicle. If you're unsure about any servicing or maintenance procedure, have the system serviced by a professional workshop. Kia recommends to visit an authorized Kia dealer/service partner.

ON ENG 7.qxp 3/18/2019 3:00 PM Page 6

⚠ WARNING

- Maintenance work

- **Performing maintenance work on a vehicle can be dangerous. You can be seriously injured while performing some maintenance procedures. If you lack sufficient knowledge and experience or the proper tools and equipment to do the work, have the system serviced by a professional workshop. Kia recommends to visit an authorized Kia dealer/service partner.**
- **Working under the hood with the engine running is dangerous. It becomes even more dangerous when you wear jewelry or loose clothing. These can become entangled in moving parts and result in injury. Therefore, if you must run the engine while working under the hood, make certain that you remove all jewelry (especially rings, bracelets, watches, and necklaces) and all neckties, scarves, and similar loose clothing before getting near the engine or cooling fans.**

⚠ CAUTION

- ***Do not put heavy objects or apply excessive force on top of the engine cover (if equipped) or fuel related parts.***
- ***When you inspect the fuel system (fuel lines and fuel injection devices), contact a professional workshop. Kia recommends to visit an authorized Kia dealer/service partner.***
- ***Do not drive long time with the engine cover (if equipped) removed.***
- ***When checking the engine room, do not go near fire.***

  Fuel, washer fluid, etc. are flammable oils that may cause fire.

(Continued)

(Continued)

- ***Before touching the battery, ignition cables and electrical wiring, you should disconnect the battery "-" terminal. You may get an electric shock from the electric current.***
- ***When you remove the interior trim cover with a flat bed (-) driver, be careful not to damage the cover.***
- ***Be careful when you replace and clean bulbs to avoid burns or electrical shock.***

ON ENG 7.qxp 3/18/2019 3:00 PM Page 7

OWNER MAINTENANCE

The following lists are vehicle checks and inspections that should be performed at the frequencies indicated to help ensure safe, dependable operation of your vehicle.

Any adverse conditions should be brought to the attention of your dealer as soon as possible.

These owner maintenance checks are generally not covered by warranties and you may be charged for labor, parts and lubricants used.

Owner maintenance schedule

When you stop for fuel:

- Check the engine oil level.
- Check the coolant level in the coolant reservoir.
- Check the windshield washer fluid level.
- Look for low or under-inflated tires.

⚠ WARNING

Be careful when checking your engine coolant level when the engine is hot. Scalding hot coolant and steam may blow out under pressure. This could cause burns or other serious injury.

While operating your vehicle:

- Note any changes in the sound of the exhaust or any smell of exhaust fumes in the vehicle.
- Check for vibrations in the steering wheel. Notice any increased steering effort or looseness in the steering wheel, or change in its straight-ahead position.
- Notice if your vehicle constantly turns slightly or “pulls” to one side when traveling on smooth, level road.
- When stopping, listen and check for unusual sounds, pulling to one side, increased brake pedal travel or “hard-to-push” brake pedal.
- If any slipping or changes in the operation of your transmission occurs, check the transmission fluid level.
- Check the automatic transmission P (Park) function.
- Check the parking brake.
- Check for fluid leaks under your vehicle (water dripping from the air conditioning system during or after use is normal).

ON ENG 7.qxp 3/18/2019 3:00 PM Page 8

At least monthly:

- Check the coolant level in the engine coolant reservoir.
- Check the operation of all exterior lights, including the stoplights, turn signals and hazard warning flashers.
- Check the inflation pressures of all tires including the spare.

At least twice a year (i.e., every Spring and Fall):

- Check the radiator, heater and air conditioning hoses for leaks or damage.
- Check the windshield washer spray and wiper operation. Clean the wiper blades with clean cloth dampened with washer fluid.
- Check the headlight alignment.
- Check the muffler, exhaust pipes, shields and clamps.
- Check the lap/shoulder belts for wear and function.
- Check for worn tires and loose wheel lug nuts.

At least once a year:

- Clean the body and door drain holes.
- Lubricate the door hinges and checks, and hood hinges.
- Lubricate the door and hood locks and latches.
- Lubricate the door rubber weatherstrips.
- Check the air conditioning system.
- Inspect and lubricate the automatic transmission linkage and controls.
- Clean the battery and terminals.
- Check the brake fluid level.

ON ENG 7.qxp 3/18/2019 3:00 PM Page 9

SCHEDULED MAINTENANCE SERVICE

Scheduled maintenance service precaution

Follow the Normal Maintenance Schedule if the vehicle is usually operated where none of the following conditions apply. If any of the following conditions apply, follow the Maintenance Under Severe Usage Conditions.

- Repeatedly driving short distance of less than 8 km (5miles) in normal temperature or less than 16 km (10 miles) in freezing temperature.
- Extensive engine idling or low speed driving for long distances.
- Driving on rough, dusty, muddy, unpaved, graveled or salt-spread roads.
- Driving in areas using salt or other corrosive materials or in very cold weather.
- Driving in heavy dust condition.
- Driving in heavy traffic area.
- Driving on uphill, downhill, or mountain roads repeatedly.
- Towing a trailer , a camper, or storing cargo on roof rack.
- Vehicle towing, driving for patrol car, taxi, or other commercial use.
- Driving over 170 km/h (106 mile/h).
- Frequently driving in stop-and-go conditions.

If your vehicle is operated under the above conditions, you should inspect, replace or refill more frequently than the following Normal Maintenance Schedule. After the periods or distance shown in the chart, continue to follow the prescribed maintenance intervals.

ON ENG 7.qxp 3/18/2019 3:00 PM Page 10

Normal Maintenance Schedule - For Gasoline Engine [Except Europe (Including Russia)]

The following maintenance services must be performed to ensure good emission control and performance. Keep receipts for all vehicle emission services to protect your warranty. Where both mileage and time are shown, the frequency of service is determined by whichever occurs first.

NO.	ITEM	REMARK
*1	Engine oil and engine oil filter	Check the engine oil level and leak every 500 km (350 miles) or before starting a long trip.
*2	Coolant (Engine)	When adding coolant, use only deionized water or soft water for your vehicle and never mix hard water in the coolant filled at the factory. An improper coolant mixture can result in serious malfunction or engine damage.
*3	Drive belts (Engine)	• Adjust alternator, water pump and air conditioner (if equipped) drive belt. Inspect and if necessary repair or replace. • Inspect drive belt tensioner, idler and alternator pulley and if necessary correct or replace.
*4	Valve clearance	Inspect for excessive valve noise and/or engine vibration and adjust if necessary. In this case, have the system checked by a professional workshop. Kia recommends to visit an authorized Kia dealer/service partner
*5	Spark plug	For your convenience, it can be replaced prior to it's interval when you do maintenance of other items.

ON ENG 7.qxp 3/18/2019 3:00 PM Page 11

NO.	ITEM	REMARK
*6	Fuel additives (Gasoline)	Kia recommends that you use unleaded gasoline which has an octane rating of RON (Research Octane Number) 95 / AKI (Anti Knock Index) 91 or higher (for Europe) or Octane Rating of RON (Research Octane Number) 91 / AKI (Anti-Knock Index) 87 or higher (except Europe). For customers who do not use good quality gasolines including fuel additives regularly, and have problems starting or the engine does not run smoothly, one bottle of additives added to the fuel tank at every 15,000km (for Europe, Australia and New Zealand)/ 10,000km (except Europe, Australia and New Zealand). Additives are available from a professional workshop along with information on how to use them. Kia recommends to visit an authorized Kia dealer/service partner.
*7	Differential oil (rear)	Differential oil should be changed anytime it has been submerged in water.
*8	Transfer case oil (AWD)	Transfer case oil should be changed anytime it has been submerged in water.

ON ENG 7.qxp 3/18/2019 3:00 PM Page 12

MAINTENANCE INTERVALS / MAINTENANCE ITEM			Normal Maintenance Schedule - For Gasoline Engine [Except Europe (Including Russia)]							
			Number of months or driving distance, whichever comes first							
			Months	**12**	**24**	**36**	**48**	**60**	**72**	**84**	**96**
			Miles×1,000	**10**	**20**	**30**	**40**	**50**	**60**	**70**	**80**
			Km×1,000	**15**	**30**	**45**	**60**	**75**	**90**	**105**	**120**
Engine oil and engine oil filter *1	Lambda II 3.8L GDI	Except middle east, Iran, india, morroco, algeria, tunisia, libia, egypt, sudan central&south america, brazil	Replace every 15,000km (10,000 miles) or 12 months							
		For middle east, Iran, india, morroco, algeria, tunisia, libia, egypt, sudan central&south america, brazil	Replace every 10,000km (6,500 miles) or 12 months							
Coolant (Engine) *2			At first, Replace 210,000 km (140,000 miles) or 120 months after that, Replace every 30,000 km (20,000 miles) or 24 months							
Drive belts (Engine) *3			-	I	-	I	-	I	-	I
Valve clearance *4	Lambda II 3.8L GDI		-	-	-	-	-	I	-	-
Vacuum hoses and crankcase ventilation hoses			I	I	I	I	I	I	I	I
Spark plugs *5	Lambda II 3.8L GDI		Replace every 150,000 km (100,000 miles) or 120 months							
Automatic transmission fluid			No check, No service required							
Drive shaft and boots			-	I	-	I	-	I	-	I

I : Inspect and if necessary, adjust, correct, clean or replace.
R : Replace

ON ENG 7.qxp 3/18/2019 3:00 PM Page 13

MAINTENANCE INTERVALS / MAINTENANCE ITEM		Normal Maintenance Schedule - For Gasoline Engine [Except Europe (Including Russia)]							
		Number of months or driving distance, whichever comes first							
	Months	12	24	36	48	60	72	84	96
	Miles×1,000	10	20	30	40	50	60	70	80
	Km×1,000	15	30	45	60	75	90	105	120
Fuel additives (Gasoline) *6		Add every 10,000 km (6,500 miles) or 6 months (For Australia and New Zealand : Add every 15,000 km (10,000 miles) or 12 months)							
Differential oil (rear) (AWD) *7	Gasoline	-	-	-	I	-	-	-	I
Transfer case oil (AWD) *8	Gasoline	-	-	-	I	-	-	-	I
Fuel filter (Gasoline)	For China, Brazil	-	I	-	R	-	I	-	R
Fuel lines, hoses and connections		-	-	-	I	-	-	-	I
Fuel tank air filter		-	I	-	R	-	I	-	R
Vapor hose and fuel filler cap		-	-	-	I	-	-	-	I
Air cleaner filter	Except China, India, Middle East	I	I	R	I	I	R	I	I
	For China, India, Middle East	R	R	R	R	R	R	R	R
Exhaust system		-	I	-	I	-	I	-	I
Cooling system		At first, Inspect 60,000 km (40,000 miles) or 48 months after that, Inspect every 30,000 km (20,000 miles) or 24 months							
Air conditioner compressor/refrigerant		I	I	I	I	I	I	I	I
Climate control air filter		R	R	R	R	R	R	R	R

I : Inspect and if necessary, adjust, correct, clean or replace.
R : Replace

ON ENG 7.qxp 3/18/2019 3:00 PM Page 14

MAINTENANCE INTERVALS / MAINTENANCE ITEM	Normal Maintenance Schedule - For Gasoline Engine [Except Europe (Including Russia)]							
	Number of months or driving distance, whichever comes first							
	Months	12	24	36	48	60	72	84	96
	Miles×1,000	10	20	30	40	50	60	70	80
	Km×1,000	15	30	45	60	75	90	105	120
Brake discs and pads		I	I	I	I	I	I	I	I
Brake lines, hoses and connections		I	I	I	I	I	I	I	I
Brake fluid		I	R	I	R	I	R	I	R
Parking brake		-	I	-	I	-	I	-	I
Steering gear rack, linkage and boots		I	I	I	I	I	I	I	I
Bolt and nuts on chassis and body		I	I	I	I	I	I	I	I
Suspension ball joints		I	I	I	I	I	I	I	I
Tire (pressure & tread wear)		I	I	I	I	I	I	I	I
Battery condition		I	I	I	I	I	I	I	I

I : Inspect and if necessary, adjust, correct, clean or replace.
R : Replace

ON ENG 7.qxp 3/18/2019 3:00 PM Page 15

Maintenance Under Severe Usage Conditions
- For Gasoline Engine [Except Europe (Including Russia)]

MAINTENANCE ITEM			MAINTENANCE OPERATION	MAINTENANCE INTERVALS	DRIVING CONDITION
Engine oil and engine oil filter	Lambda II 3.8L GDI	Except middle east, Iran, india, morroco, algeria, tunisia, libia, egypt, sudan central&south america, brazil	R	Replace every 7,500km (5,000 miles) or 6 months	A, B, C, D, E, F, G, H, I, J, K
		For middle east, Iran, india, morroco, algeria, tunisia, libia, egypt, sudan central&south america, brazil	R	Replace every 5,000km (3,000 miles) or 6months	A, B, C, D, E, F, G, H, I, J, K
Spark plugs			R	Replace more frequently depending on the condition	B, H, I, K
Automatic transmission fluid			R	Every 90,000 km (60,000 miles)	A, C, D, E, F, G, H, I, J
Drive shaft and boots			I	Inspect more frequently depending on the condition	C, D, E, F, G, H, I, J
Air cleaner filter			R	Replace more frequently depending on the condition	C, E
Climate control air filter			R	Replace more frequently depending on the condition	C, E, G
Brake discs and pads, calipers and rotors			I	Inspect more frequently depending on the condition	C, D, E, G, H

ON ENG 7.qxp 3/18/2019 3:00 PM Page 16

MAINTENANCE ITEM		MAINTENANCE OPERATION	MAINTENANCE INTERVALS	DRIVING CONDITION
Differential oil (rear) (AWD)	Gasoline	R	Every 120,000 km (80,000 miles)	C, E, G, H, I, J
Transfer case oil (AWD)	Gasoline	R	Every 120,000 km (80,000 miles)	C, E, G, H, I, J
Parking brake		I	Inspect more frequently depending on the condition	C, D, G, H
Steering gear rack, linkage and boots		I	Inspect more frequently depending on the condition	C, D, E, F, G
Suspension ball joints		I	Inspect more frequently depending on the condition	C, D, E, F, G

Maintenance operation

I : Inspect and if necessary, adjust, correct, clean or replace.

R : Replace

SEVERE DRIVING CONDITIONS

A : Repeatedly driving short distance of less than 8 km (5miles) in normal temperature or less than 16 km (10 miles) in freezing temperature.

B : Extensive engine idling or low speed driving for long distances.

C : Driving on rough, dusty, muddy, unpaved, graveled or salt-spread roads.

D : Driving in areas using salt or other corrosive materials or in very cold weather

E : Driving in heavy dust condition.

F : Driving in heavy traffic area.

G : Driving on uphill, downhill, or mountain roads repeatedly.

H : Towing a trailer , a camper, or storing cargo on roof rack.

I : Vehicle towing, driving for patrol car, taxi, or other commercial use.

J : Driving over 170 km/h (106 mile/h).

K : Frequently driving in stop-and-go conditions.

ON ENG 7.qxp 3/18/2019 3:00 PM Page 17

EXPLANATION OF SCHEDULED MAINTENANCE ITEMS

Engine oil and filter

The engine oil and filter should be changed at the intervals specified in the maintenance schedule. If the vehicle is being driven in severe conditions, more frequent oil and filter changes are required.

Drive belts

Inspect all drive belts for evidence of cuts, cracks, excessive wear or oil saturation and replace if necessary. Drive belts should be checked periodically for proper tension and adjusted as necessary.

⚠ CAUTION

When you are inspecting the belt, place the start/stop button in the OFF or ACC position.

✻ NOTICE

If the drive belt has been worn excessively or damaged in any way, you must replace the drive belt system with a new one.
In case the vehicle is driven without replacement, it could result in battery overheating or discharge. Also, the steering wheel may become more difficult to control.

Fuel filter (for gasoline)

Kia gasoline vehicle is equipped a lifetime fuel filter that integrated with the fuel tank. Regular maintenance or replacement is not needed but depends on fuel quality. If there are some important safety matters like fuel flow restriction, surging, loss of power, hard starting problem etc, fuel filter inspection or replace is needed.

Have the fuel filter inspected or replaced by a professional workshop. Kia recommends to visit an authorized Kia dealer/service partner.

ON ENG 7.qxp 3/18/2019 3:00 PM Page 18

Fuel lines, fuel hoses and connections

Check the fuel lines, fuel hoses and connections for leakage and damage. Have the fuel lines, fuel hoses and connections replaced by a professional workshop. Kia recommends to visit an authorized Kia dealer/service partner.

Vapor hose (for gasoline engine) and fuel filler cap

The vapor hose and fuel filler cap should be inspected at those intervals specified in the maintenance schedule. Make sure that a new vapor hose or fuel filler cap is correctly replaced.

Vacuum crankcase ventilation hoses (if equipped)

Inspect the surface of hoses for evidence of heat and/or mechanical damage. Hard and brittle rubber, cracking, tears, cuts, abrasions, and excessive swelling indicate deterioration. Particular attention should be paid to examine those hose surfaces nearest to high heat sources, such as the exhaust manifold.
Inspect the hose routing to assure that the hoses do not come in contact with any heat source, sharp edges or moving component which might cause heat damage or mechanical wear. Inspect all hose connections, such as clamps and couplings, to make sure they are secure, and that no leaks are present. Hoses should be replaced immediately if there is any evidence of deterioration or damage.

Air cleaner filter

Have the air cleaner filter replaced by a professional workshop. Kia recommends to visit an authorized Kia dealer/service partner.

Spark plugs (for gasoline engine)

Make sure to install new spark plugs of the correct heat range.

⚠ WARNING

Do not disconnect and inspect spark plugs when the engine is hot. You may burn yourself.

ON ENG 7.qxp 3/18/2019 3:00 PM Page 19

Valve clearance (for gasoline engine)

Inspect for excessive valve noise and/or engine vibration and adjust if necessary. In this case, have the system serviced by a professional workshop. Kia recommends to visit an authorized Kia dealer/service partner.

Cooling system

Check the cooling system components, such as the radiator, coolant reservoir, hoses and connections for leakage and damage. Replace any damaged parts.

Coolant

The coolant should be changed at the intervals specified in the maintenance schedule.

Automatic transmission fluid

Automatic transmission fluid should not be checked under normal usage conditions.
Have the automatic transmission fluid changed by a professional workshop according to the maintenance schedule. Kia recommends to visit an authorized Kia dealer/service partner.

✻ NOTICE

Automatic transmission fluid color is basically red.
As the vehicle is driven, the automatic transmission fluid will begin to look darker. It is normal condition and you should not judge the need to replace the fluid based upon the changed color.

⚠ CAUTION

The use of a non-specified fluid could result in transmission malfunction and failure.

Use only specified automatic transmission fluid. (Refer to "Recommended lubricants and capacities" in chapter 9.)

ON ENG 7.qxp 3/18/2019 3:00 PM Page 20

Brake hoses and lines

Visually check for proper installation, chafing, cracks, deterioration and any leakage. Replace any deteriorated or damaged parts immediately.

Brake fluid

Check the brake fluid level in the brake fluid reservoir. The level should be between “MIN” and “MAX” marks on the side of the reservoir. Use only hydraulic brake fluid conforming to DOT 3 or DOT 4 specification.

Parking brake

Inspect the parking brake system including the parking brake pedal and cables.

Brake discs, pads, calipers and rotors

Check the pads for excessive wear, discs for run out and wear, and calipers for fluid leakage.

For more information on checking the pads or lining wear limit, we recommend to refer to the Kia web site.

(**https://www.kia-hotline.com**)

Suspension mounting bolts

Check the suspension connections for looseness or damage. Retighten to the specified torque.

Steering gear box, linkage & boots/lower arm ball joint

With the vehicle stopped and engine off, check for excessive free-play in the steering wheel.

Check the linkage for bends or damage. Check the dust boots and ball joints for deterioration, cracks, or damage. Replace any damaged parts.

Drive shafts and boots

Check the drive shafts, boots and clamps for cracks, deterioration, or damage. Replace any damaged parts and, if necessary, repack the grease.

Air conditioning refrigerant

Check the air conditioning lines and connections for leakage and damage.

ON ENG 7.qxp 3/18/2019 3:00 PM Page 21

ENGINE OIL

Checking the engine oil level

■ Gasoline Engine (Lambda II 3.8L GDI)

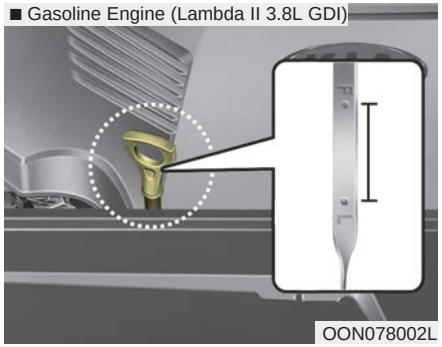

OON078002L

1. Be sure the vehicle is on level ground.
2. Start the engine and allow it to reach normal operating temperature.
3. Turn the engine off and wait for a few minutes (about 5 minutes) for the oil to return to the oil pan.
4. Pull the dipstick out, wipe it clean, and re-insert it fully.

⚠ WARNING - Radiator hose

Be very careful not to touch the radiator hose when checking or adding the engine oil as it may be hot enough to burn you.

5. Pull the dipstick out again and check the level. The level should be between F (Full) and L (Low).

⚠ CAUTION

- ***Do not overfill the engine oil. It may damage the engine.***
- ***Do not spill engine oil, when adding or changing engine oil. If you drop the engine oil on the engine room, wipe it off immediately.***
- ***When you wipe the oil level gauge, you should wipe it with a clean cloth. When mixed with debris, it can cause engine damage.***

ON ENG 7.qxp 3/18/2019 3:00 PM Page 22

■ Gasoline Engine (Lambda II 3.8L GDI)

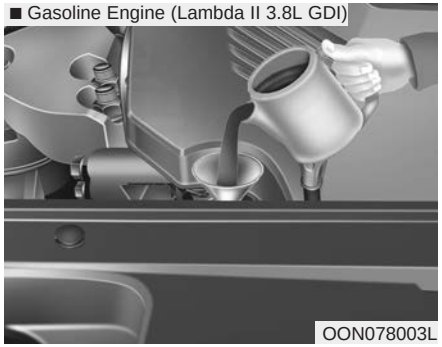

OON078003L

If it is near or at L (Low), add enough oil to bring the level to F (Full). **Do not overfill.**

Use a funnel to help prevent oil from being spilled on engine components.

Use only the specified engine oil. (Refer to "Recommended lubricants and capacities" in chapter 8.)

Changing the engine oil and filter

Have the engine oil and filter replaced by a professional workshop. Kia recommends to visit an authorized Kia dealer/service partner.

⚠ WARNING

Used engine oil may cause skin irritation or cancer if left in contact with the skin for prolonged periods of time. Used engine oil contains chemicals that have caused cancer in laboratory animals. Always protect your skin by washing your hands thoroughly with soap and warm water as soon as possible after handling used oil.

ON ENG 7.qxp 3/18/2019 3:00 PM Page 23

ENGINE COOLANT

The high-pressure cooling system has a reservoir filled with year round antifreeze coolant. The reservoir is filled at the factory.

Check the antifreeze protection and coolant level at least once a year, at the beginning of the winter season, and before traveling to a colder climate.

⚠ CAUTION

- ***When the engine overheats from low engine coolant, suddenly adding engine coolant may cause cracks in the engine. To prevent damage, add engine coolant slowly in small quantities.***
- ***Do not drive with no engine coolant. It may cause water pump failure and engine seizure, etc.***

Checking the coolant level

⚠ WARNING



Removing radiator cap

- **Never attempt to remove the radiator cap while the engine is operating or hot. Doing so might lead to cooling system and engine damage. Also, hot coolant or steam could cause serious personal injury.**
- **Turn the engine off and wait until it cools down. Use extreme care when removing the radiator cap. Wrap a thick towel around it, and turn it counterclockwise slowly to the first stop. Step back while the pressure is released from the cooling system.**

(Continued)

(Continued)

When you are sure all the pressure has been released, press down on the cap, using a thick towel, and continue turning counterclockwise to remove it.

- **Even if the engine is not operating, do not remove the radiator cap or the drain plug while the engine and radiator are hot. Hot coolant and steam may still blow out under pressure, causing serious injury.**

ON ENG 7.qxp 3/18/2019 3:00 PM Page 24

⚠ WARNING



The electric motor (cooling fan) is controlled by engine coolant temperature, refrigerant pressure and vehicle speed. It may sometimes operate even when the engine is not running. Use extreme caution when working near the blades of the cooling fan so that you are not injured by a rotating fan blades. As the engine coolant temperature decreases, the electric motor will automatically shut off. This is a normal condition.

If your vehicle is equipped with GDI, the electric motor (cooling fan) may operate until you disconnect the negative battery cable.

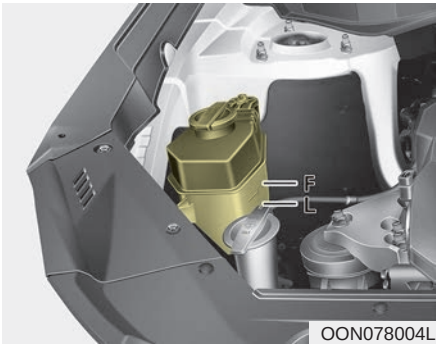

OON078004L

Check the condition and connections of all cooling system hoses and heater hoses. Replace any swollen or deteriorated hoses.

The coolant level should be filled between F (Full) and L (Low) marks on the side of the coolant reservoir when the engine is cool.

If the coolant level is low, add enough specified coolant to provide protection against freezing and corrosion. Bring the level to F (Full), but do not overfill. If frequent additions are required, have the system inspected by a professional workshop. Kia recommends to visit an authorized Kia dealer/service partner.

Recommended engine coolant

- When adding coolant, use only deionized water or soft water for your vehicle and never mix hard water in the coolant filled at the factory. An improper coolant mixture can result in serious malfunction or engine damage.
- The engine in your vehicle has aluminum engine parts and must be protected by an ethylene-glycol with phosphate based coolant to prevent corrosion and freezing.
- DO NOT USE alcohol or methanol coolant or mix them with the specified coolant.
- Do not use a solution that contains more than 60% antifreeze or less than 35% antifreeze, which would reduce the effectiveness of the solution.

ON ENG 7.qxp 3/18/2019 3:00 PM Page 25

For mixture percentage, refer to the following table.

Ambient Temperature	Mixture Percentage (volume)	
	Antifreeze	Water
-15°C (5°F)	35	65
-25°C (-13°F)	40	60
-35°C (-31°F)	50	50
-45°C (-49°F)	60	40

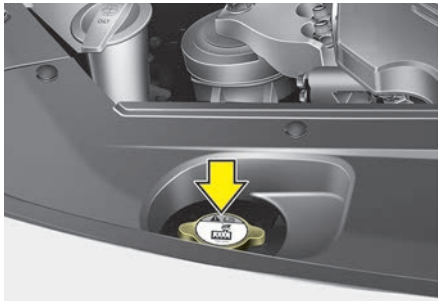

OON078005L

⚠ WARNING



Radiator cap

Do not remove the radiator cap when the engine and radiator are hot. Scalding hot coolant and steam may blow out under pressure causing serious injury.

Changing the coolant

Have the coolant replaced by a professional workshop. Kia recommends to visit an authorized Kia dealer/service partner.

⚠ CAUTION

Put a thick cloth around the radiator cap before refilling the coolant in order to prevent the coolant from overflowing into engine parts such as the alternator.

⚠ WARNING - Coolant

- **Do not use radiator coolant or antifreeze in the washer fluid reservoir.**
- **Radiator coolant can severely obscure visibility when sprayed on the windshield and may cause loss of vehicle control or damage the paint and body trim.**

ON ENG 7.qxp 3/18/2019 3:01 PM Page 26

BRAKE FLUID

Checking the brake fluid level

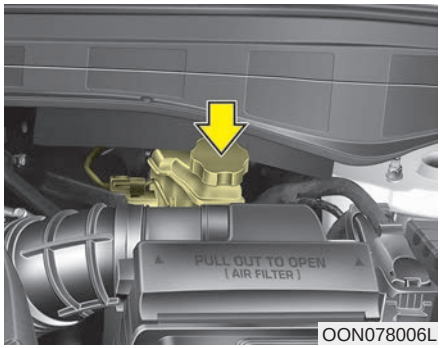

OON078006L

Check the fluid level in the reservoir periodically. The fluid level should be between MAX and MIN marks on the side of the reservoir.

Before removing the reservoir cap and adding brake fluid, clean the area around the reservoir cap thoroughly to prevent brake fluid contamination.

If the level is low, add fluid to the MAX level. The level will fall with accumulated mileage. This is a normal condition associated with the wear of the brake linings.

If the fluid level is excessively low, have the system checked by a professional workshop. Kia recommends to visit an authorized Kia dealer/service partner.

Use only the specified brake fluid. (Refer to “Recommended lubricants or capacities” in chapter 8.)

Never mix different types of fluid.

⚠ WARNING - Loss of brake fluid

In the event the brake/clutch system requires frequent additions of fluid, have the system Inspected by a professional workshop. Kia recommends to visit an authorized Kia dealer/service partner.

⚠ WARNING - Brake fluid

When changing and adding brake fluid, handle it carefully. Do not let it come in contact with your eyes. If brake fluid should come in contact with your eyes, immediately flush them with a large quantity of fresh tap water. Have your eyes examined by a doctor as soon as possible.

⚠ CAUTION

Do not allow brake fluid to contact the vehicle's body paint, as paint damage will result. Brake fluid, which has been exposed to open air for an extended time should never be used as its quality cannot be guaranteed. It should be properly disposed. Don't put in the wrong kind of fluid. A few drops of mineral-based oil, such as engine oil, in your brake system can damage brake system parts.

ON ENG 7.qxp 3/18/2019 3:01 PM Page 27

WASHER FLUID

Checking the washer fluid level

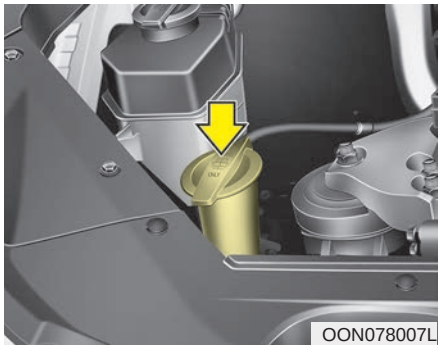

The reservoir is translucent so that you can check the level with a quick visual inspection.

Check the fluid level in the washer fluid reservoir and add fluid if necessary. Plain water may be used if washer fluid is not available. However, use washer solvent with antifreeze characteristics in cold climates to prevent freezing.

⚠ WARNING - Coolant

- **Do not use radiator coolant or antifreeze in the washer fluid reservoir.**
- **Radiator coolant can severely obscure visibility when sprayed on the windshield and may cause loss of vehicle control or damage to paint and body trim.**
- **Windshield Washer fluid agents contain some amounts of alcohol and can be flammable under certain circumstances. Do not allow sparks or flame to contact the washer fluid or the washer fluid reservoir. Damage to the vehicle or occupants could occur.**
- **Windshield washer fluid is poisonous to humans and animals. Do not drink and avoid contacting windshield washer fluid. Serious injury or death could occur.**

ON ENG 7.qxp 3/18/2019 3:01 PM Page 28

PARKING BRAKE

Checking the parking brake



OON078008L

Check whether the stroke is within specification when the parking brake pedal is depressed with 30 kg (66 lb, 294N) of force. Also, the parking brake alone should securely hold the vehicle on a fairly steep grade. If the stroke is more or less than specified, have the system serviced by a professional workshop. Kia recommends to visit an authorized Kia dealer/service partner.

Stroke : 7 ~ 8 notch

ON ENG 7.qxp 3/18/2019 3:01 PM Page 29

AIR CLEANER

Filter replacement

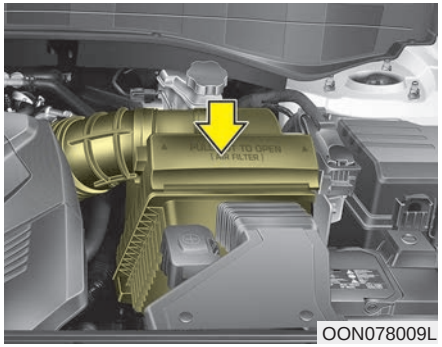

OON078009L

It must be replaced when necessary, and should not be washed.

You can clean the filter when inspecting the air cleaner element.

Clean the filter by using compressed air.

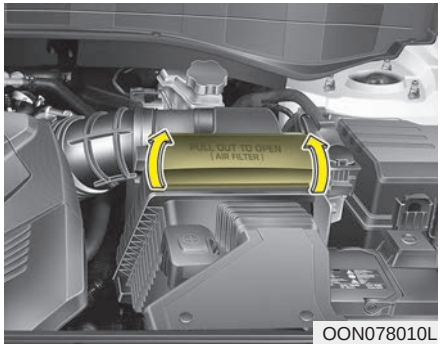

OON078010L

1. Pull out the air cleaner cover.

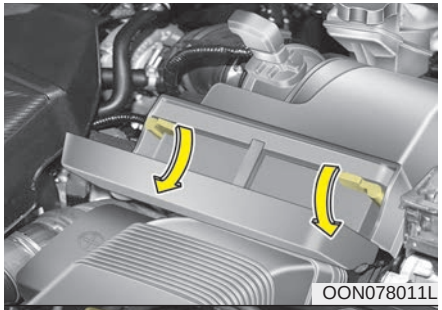

OON078011L

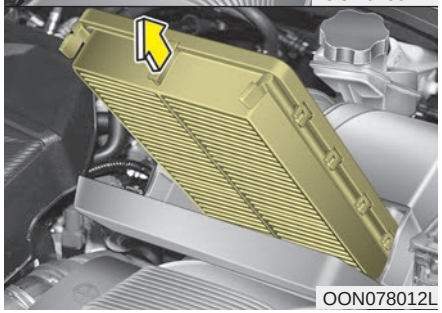

OON078012L

2. Unlock by turning the locking lever downward.
3. Pull the air cleaner filter to replace.
4. Lock the cover with the reverse order.

ON ENG 7.qxp 3/18/2019 3:01 PM Page 30

Replace the filter according to the Maintenance Schedule.

If the vehicle is operated in extremely dusty or sandy areas, replace the element more often than the usual recommended intervals. (Refer to “Maintenance under severe usage conditions” in this chapter 8.)

⚠ CAUTION

- ***Do not drive with the air cleaner removed; this will result in excessive engine wear.***
- ***When removing the air cleaner filter, be careful that dust or dirt does not enter the air intake, or damage may result.***
- ***Use parts for replacement from a professional workshop. Kia recommends to visit an authorized Kia dealer/service partner.***

ON ENG 7.qxp 3/18/2019 3:01 PM Page 31

CLIMATE CONTROL AIR FILTER

Filter inspection

The climate control air filter should be replaced according to the maintenance schedule. If the vehicle is operated in severely air-polluted cities or on dusty rough roads for a long period, it should be inspected more frequently and replaced earlier. When you replace the climate control air filter, replace it performing the following procedure, and be careful to avoid damaging other components.

Filter replacement

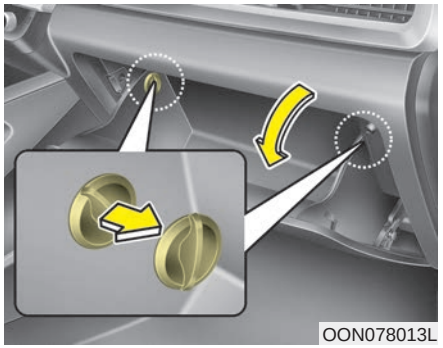

1. Open the glove box and remove the stoppers on both sides.

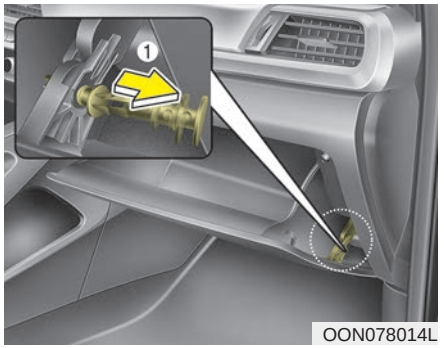

2. With the glove box open, pull the pin and the support strap (1).

ON ENG 7.qxp 3/18/2019 3:01 PM Page 32

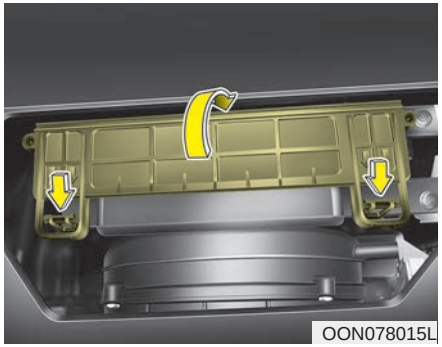
OON078015L

3. Remove the climate control air filter cover while pressing the lock on the upper side of the cover

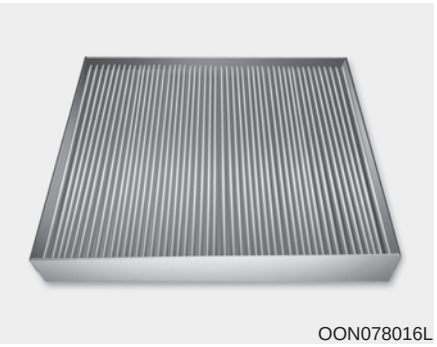
OON078016L

4. Replace the climate control air filter.
5. Reassemble in the reverse order of disassembly.

✻ NOTICE

When replacing the climate control air filter install it properly. Otherwise, the system may produce noise and the effectiveness of the filter may be reduced.

ON ENG 7.qxp 3/18/2019 3:01 PM Page 33

WIPER BLADES

Blade inspection

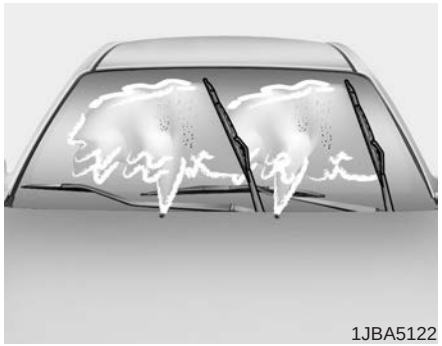

1JBA5122

✻ NOTICE

Commercial hot waxes applied by automatic car washes have been known to make the windshield difficult to clean.

Contamination of either the windshield or the wiper blades with foreign matter can reduce the effectiveness of the windshield wipers. Common sources of contamination are insects, tree sap, and hot wax treatments used by some commercial car washes. If the blades are not wiping properly, clean both the window and the blades with a good cleaner or mild detergent, and rinse thoroughly with clean water.

⚠ CAUTION

To prevent damage to the wiper blades, do not use gasoline, kerosene, paint thinner, or other solvents on or near them.

Blade replacement

When the wipers no longer clean adequately, the blades may be worn or cracked, and require replacement.

⚠ CAUTION

To prevent damage to the wiper arms or other components, do not attempt to move the wipers manually.

⚠ CAUTION

The use of a non-specified wiper blade could result in wiper malfunction and failure.

ON ENG 7.qxp 3/18/2019 3:01 PM Page 34

Front windshield wiper blade

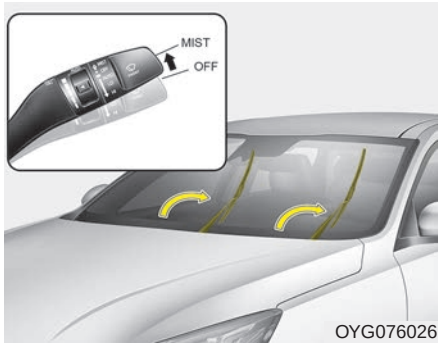

For your convenience, move the windshield wiper blades to the service position as follows;

After turning off the engine, move the wiper switch to the single wiping (MIST) position within 20 seconds and hold the switch more than 2 seconds until the wiper blade is in the fully up position.

⚠ CAUTION

Do not allow the wiper arm to fall against the windshield, since it may chip or crack the windshield.

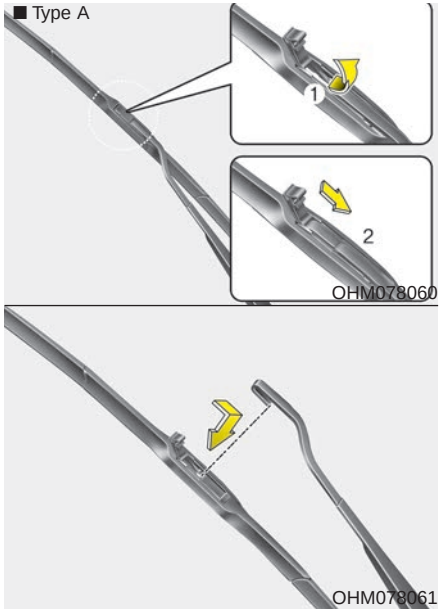

1. Raise the wiper arm.
2. Lift up the wiper blade clip. Then pull down the blade assembly and remove it.
3. Install the new blade assembly.

ON ENG 7.qxp 3/18/2019 3:01 PM Page 35

4. Return the wiper arm on the windshield.
5. Turn ignition to the ON position and wiper arms will return to the normal operating position.

■ Type B

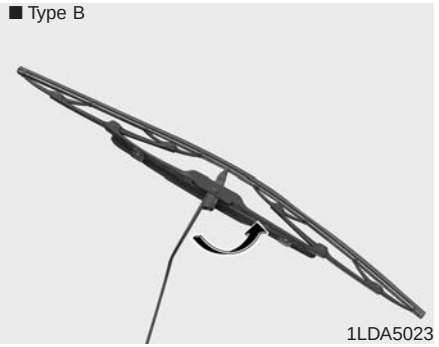

1LDA5023

1. Raise the wiper arm and turn the wiper blade assembly to expose the plastic locking clip.

⚠ CAUTION

Do not allow the wiper arm to fall against the windshield, since it may chip or crack the windshield.

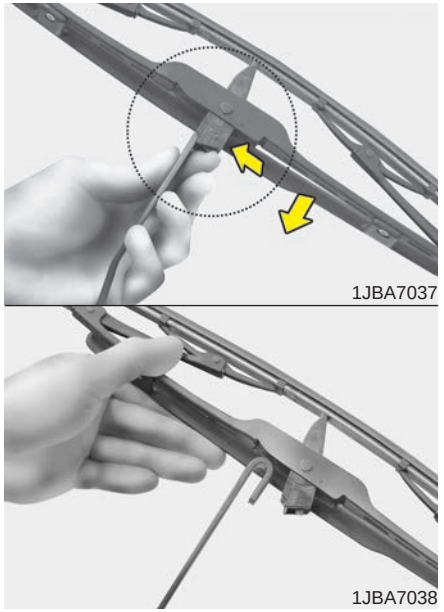

1JBA7037

1JBA7038

2. Compress the clip and slide the blade assembly downward.
3. Lift it off the arm.
4. Install the blade assembly in the reverse order of removal.

ON ENG 7.qxp 3/18/2019 3:01 PM Page 36

Rear window wiper blade

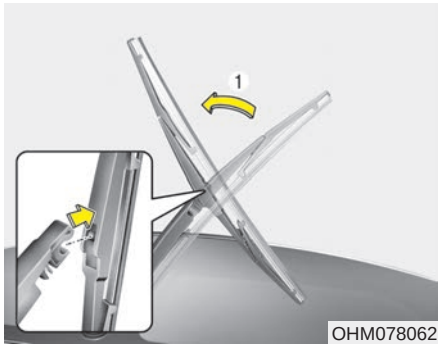

1. Raise the wiper arm and pull out the wiper blade assembly.

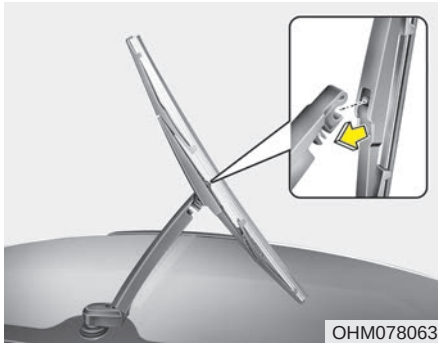

2. Install the new blade assembly by inserting the center part into the slot in the wiper arm until it clicks into place.
3. Make sure the blade assembly is installed firmly by trying to pull it slightly.

To prevent damage to the wiper arms or other components, have the wiper blade replaced by a professional workshop. Kia recommends to visit an authorized Kia dealer/service partner.

ON ENG 7.qxp 3/18/2019 3:01 PM Page 37

BATTERY

For best battery service

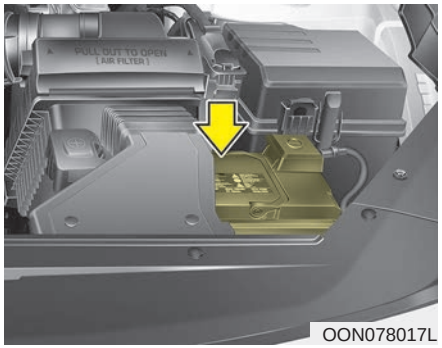

OON078017L

- Keep the battery securely mounted.
- Keep the battery top clean and dry.
- Keep the terminals and connections clean, tight, and coated with petroleum jelly or terminal grease.
- Rinse any spilled electrolyte from the battery immediately with a solution of water and baking soda.
- If the vehicle is not going to be used for an extended time, disconnect the battery cables.

✻ NOTICE

Basically equipped battery is maintenance free type. If your vehicle is equipped with the battery marked with LOWER and UPPER on the side, you can check the electrolyte level. The electrolyte level should be between LOWER and UPPER. If the electrolyte level is low, it needs to add distilled (demineralized) water (Never add sulfuric acid or other electrolyte). When refill, be careful not to splash the battery and adjacent components. And do not overfill the battery cells. It can cause corrosion on other parts. After then ensure that tighten the cell caps. Contact a professional workshop. Kia recommends to visit an authorized Kia dealer/service partner.

⚠ WARNING - Battery dangers

Always read the following instructions carefully when handling a battery.

Keep lighted cigarettes and all other flames or sparks away from the battery.

Hydrogen, a highly combustible gas, is always present in battery cells and may explode if ignited.

Keep batteries out of the reach of children because batteries contain highly corrosive SULFURIC ACID. Do not allow battery acid to contact your skin, eyes, clothing or paint finish.

(Continued)

ON ENG 7.qxp 3/18/2019 3:01 PM Page 38

(Continued)



If any electrolyte gets into your eyes, flush your eyes with clean water for at least 15 minutes and get immediate medical attention.

If electrolyte gets on your skin, thoroughly wash the contacted area. If you feel pain or burning sensation, get medical attention immediately.



Wear eye protection when charging or working near a battery. Always provide ventilation when working in an enclosed space.



An inappropriately disposed battery can be harmful to the environment and human health. Dispose the battery according to your local law(s) or regulation.

(Continued)

(Continued)



The battery contains lead. Do not dispose of it after use. Contact a professional workshop. Kia recommends to visit an authorized Kia dealer/service partner.

- **When lifting a plastic-cased battery, excessive pressure on the case may cause battery acid to leak, resulting in personal injury. Lift with a battery carrier or with your hands on opposite corners.**
- **Never attempt to recharge the battery when the battery cables are connected.**
- **The electrical ignition system works with high voltage. Never touch these components with the engine running or the ignition switched on.**

Failure to follow the above warnings can result in serious bodily injury or death.

⚠ CAUTION

- ***When you don't use the vehicle for a long time in the low temperature area, separate the battery and keep it indoors.***
- ***Always charge the battery fully to prevent battery case damage in low temperature area.***
- ***If you connect unauthorized electronic devices to the battery, the battery may be discharged. Never use unauthorized devices.***

ON ENG 7.qxp 3/18/2019 3:01 PM Page 39

Battery capacity label

■ Example

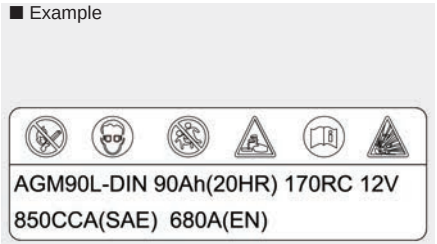

OUM074113L

❊ The actual battery label in the vehicle may differ from the illustration.

1. AGM90L-DIN : The Kia model name of battery
2. 90Ah(20HR) : The nominal capacity (in Ampere hours)
3. 170RC : The nominal reserve capacity (in min.)
4. 12V : The nominal voltage
5. 850CCA (SAE) : The cold-test current in amperes by SAE
6. 680A : The cold-test current in amperes by EN

Battery recharging

Your vehicle has a maintenance-free, calcium-based battery.

- If the battery becomes discharged in a short time (because, for example, the headlights or interior lights were left on while the vehicle was not in use), recharge it by slow charging (trickle) for 10 hours.
- If the battery gradually discharges because of high electric load while the vehicle is being used, recharge it at 20-30A for two hours.

⚠ WARNING - Recharging battery

When recharging the battery, observe the following precautions:

- **The battery must be removed from the vehicle and placed in an area with good ventilation.**
- **Do not allow cigarettes, sparks, or flame near the battery.**
- **Watch the battery during charging, and stop or reduce the charging rate if the battery cells begin gassing (boiling) violently or if the temperature of the electrolyte of any cell exceeds 49°C (120°F).**
- **Wear eye protection when checking the battery during charging.**

(Continued)

ON ENG 7.qxp 3/18/2019 3:01 PM Page 40

(Continued)

- **Disconnect the battery charger in the following order.**
  1. **Turn off the battery charger main switch.**
  2. **Unhook the negative clamp from the negative battery terminal.**
  3. **Unhook the positive clamp from the positive battery terminal.**

⚠ WARNING

- **Before performing maintenance or recharging the battery, turn off all accessories and stop the engine.**
- **The negative battery cable must be removed first and installed last when the battery is disconnected.**
- **Operation related to the battery is recommended to be done by a professional workshop. Kia recommends to visit an authorized Kia dealer/service partner.**

⚠ CAUTION

- ***Keep the battery away from water or any liquid.***
- ***For your safety, use parts for replacement from a professional workshop. Kia recommends to visit an authorized Kia dealer/service partner.***

⚠ CAUTION - AGM battery (if equipped)

- ***Absorbent Glass Matt (AGM) batteries are maintenance free and have the AGM battery serviced by a professional workshop. Kia recommends to visit an authorized Kia dealer/service partner.***

  For charging your AGM battery, use only fully automatic battery chargers that are specially developed for AGM batteries.
- ***When replacing the AGM battery, use parts for replacement from a professional workshop. Kia recommends to visit an authorized Kia dealer/service partner.***
- ***Do not open or remove the cap on top of the battery. This may cause leaks of internal electrolyte that could result in severe injury.***

ON ENG 7.qxp 3/18/2019 3:01 PM Page 41

Reset items

Items should be reset after the battery has been discharged or the battery has been disconnected.

- Auto up/down window
- Sunroof
- Trip computer
- Climate control system
- Integrated Memory System
- Audio

ON ENG 7.qxp 3/18/2019 3:01 PM Page 42

TIRES AND WHEELS

Tire care

For proper maintenance, safety, and maximum fuel economy, you must always maintain recommended tire inflation pressures and stay within the load limits and weight distribution recommended for your vehicle.

Recommended cold tire inflation pressures

All tire pressures (including the spare) should be checked when the tires are cold. “Cold Tires” means the vehicle has not been driven for at least three hours or driven less than 1.6 km (one mile).

Recommended pressures must be maintained for the best ride, top vehicle handling, and minimum tire wear.

For recommended inflation pressure, refer to “Tire and wheels” in chapter 8.

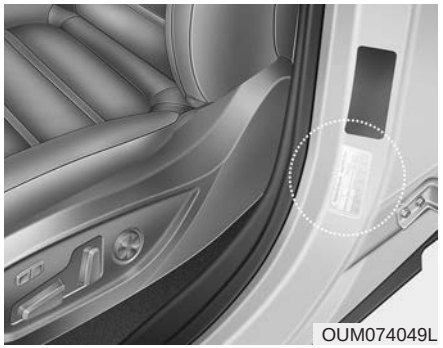
OUM074049L

All specifications (sizes and pressures) can be found on a label attached to the vehicle.

⚠ WARNING - Tire underinflation

Severe underinflation (70 kPa (10 psi) or more) can lead to severe heat build-up, causing blowouts, tread separation and other tire failures that can result in the loss of vehicle control leading to severe injury or death. This risk is much higher on hot days and when driving for long periods at high speeds.

⚠ CAUTION

- ***Underinflation also results in excessive wear, poor handling and reduced fuel economy. Wheel deformation also is possible. Keep your tire pressures at the proper levels. If a tire frequently needs refilling, have the system checked by a professional workshop. Kia recommends to visit an authorized Kia dealer/service partner.***
- ***Overinflation produces a harsh ride, excessive wear at the center of the tire tread, and a greater possibility of damage from road hazards.***

ON ENG 7.qxp 3/18/2019 3:01 PM Page 43

⚠ CAUTION

- ***Warm tires normally exceed recommended cold tire pressures by 28 to 41 kPa (4 to 6 psi). Do not release air from warm tires to adjust the pressure or the tires will be underinflated.***
- ***Be sure to reinstall the tire inflation valve caps. Without the valve cap, dirt or moisture could get into the valve core and cause air leakage. If a valve cap is missing, install a new one as soon as possible.***

⚠ WARNING - Tire Inflation

Overinflation or underinflation can reduce tire life, adversely affect vehicle handling, and lead to sudden tire failure. This could result in loss of vehicle control and potential injury.

⚠ CAUTION - Tire pressure

Always observe the following:

- ***Check tire pressure when the tires are cold. (After vehicle has been parked for at least three hours or hasn't been driven more than 1.6 km (one mile) since startup.)***
- ***Check the pressure of your spare tire each time you check the pressure of other tires.***
- ***Never overload your vehicle. Be careful not to overload a vehicle luggage rack if your vehicle is equipped with one.***
- ***Worn, old tires can cause accidents. If your tread is badly worn, or if your tires have been damaged, replace them.***

Checking tire inflation pressure

Check your tires once a month or more.

Also, check the tire pressure of the spare tire.

How to check

Use a good quality gauge to check tire pressure. You can not tell if your tires are properly inflated simply by looking at them. Radial tires may look properly inflated even when they're underinflated.

Check the tire's inflation pressure when the tires are cold. - "Cold" means your vehicle has been sitting for at least three hours or driven no more than 1.6 km (1 mile).

ON ENG 7.qxp 3/18/2019 3:01 PM Page 44

Remove the valve cap from the tire valve stem. Press the tire gauge firmly onto the valve to get a pressure measurement. If the cold tire inflation pressure matches the recommended pressure on the tire and loading information label, no further adjustment is necessary. If the pressure is low, add air until you reach the recommended amount.

If you overfill the tire, release air by pushing on the metal stem in the center of the tire valve. Recheck the tire pressure with the tire gauge. Be sure to put the valve caps back on the valve stems. They help prevent leaks by keeping out dirt and moisture.

⚠ WARNING

- **Inspect your tires frequently for proper inflation as well as wear and damage. Always use a tire pressure gauge.**
- **Tires with too much or too little pressure wear unevenly causing poor handling, loss of vehicle control, and sudden tire failure leading to accidents, injuries, and even death. The recommended cold tire pressure for your vehicle can be found in this manual and on the tire label located on the driver's side center pillar.**
- **Worn tires can cause accidents. Replace tires that are worn, show uneven wear, or are damaged.**
- **Remember to check the pressure of your spare tire. Kia recommends that you check the spare every time you check the pressure of the other tires on your vehicle.**

Tire rotation

To equalize tread wear, it is recommended that the tires be rotated every 12,000 km (7,500 miles) or sooner if irregular wear develops.

During rotation, check the tires for correct balance.

When rotating tires, check for uneven wear and damage. Abnormal wear is usually caused by incorrect tire pressure, improper wheel alignment, out-of-balance wheels, severe braking or severe cornering. Look for bumps or bulges in the tread or side of tire. Replace the tire if you find either of these conditions. Replace the tire if fabric or cord is visible. After rotation, be sure to bring the front and rear tire pressures to specification and check lug nut tightness.

Refer to “Tire and wheels” in chapter 8.

ON ENG 7.qxp 3/18/2019 3:01 PM Page 45

With a full-size spare tire
(Only the vehicle without TPMS system)

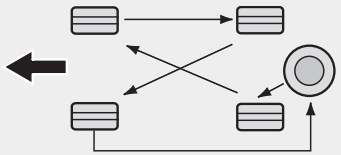

CBGO0706

Without a spare tire

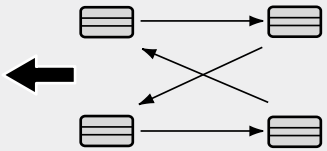

S2BLA790A

Directional tires (if equipped)

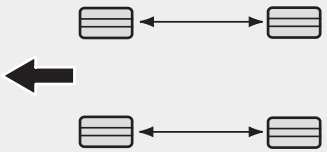

CBGQ0707A

Disc brake pads should be inspected for wear whenever tires are rotated.

✻ NOTICE

Rotate radial tires that have an asymmetric tread pattern only from front to rear and not from right to left.

⚠ WARNING

- **Do not use the compact spare tire (if equipped) for tire rotation.**
- **Do not mix bias ply and radial ply tires under any circumstances. This may cause unusual handling characteristics that could result in death, severe injury, or property damage.**

Wheel alignment and tire balance

The wheels on your vehicle were aligned and balanced carefully at the factory to give you the longest tire life and best overall performance.

In most cases, you will not need to have your wheels aligned again. However, if you notice unusual tire wear or your vehicle pulling one way or the other, the alignment may need to be reset.

If you notice your vehicle vibrating when driving on a smooth road, your wheels may need to be rebalanced.

⚠ CAUTION

Improper wheel weights can damage your vehicle's aluminum wheels. Use only approved wheel weights.

ON ENG 7.qxp 3/18/2019 3:01 PM Page 46

Tire replacement



If the tire is worn evenly, a tread wear Indicator (A) will appear as a solid band across the tread. This shows there is less than 1.6 mm (1/16 in.) of tread left on the tire. Replace the tire when this happens.

Do not wait for the band to appear across the entire tread before replacing the tire.

✻ NOTICE

We recommend that when replacing tires, use the same originally supplied with the vehicles.
If not, that affects driving performance.

⚠ CAUTION

When replacing the tires, recheck and tighten the wheel nuts after driving about 50km (31miles) and recheck after driving about 1,000km (620miles). If the steering wheel shakes or the vehicle vibrates while driving, the tire is out of balance. Align the tire balance. If the problem is not solved, contact a professional workshop. Kia recommends to visit an authorized Kia dealer/service partner.

⚠ WARNING - Replacing tires

To reduce the chance of serious or fatal injuries from an accident caused by tire failure or loss of vehicle control:

- **Replace tires that are worn, show uneven wear, or are damaged. Worn tires can cause loss of braking effectiveness, steering control, and traction.**
- **Do not drive your vehicle with too little or too much pressure in your tires. This can lead to uneven wear and tire failure.**
- **When replacing tires, never mix radial and bias-ply tires on the same car. You must replace all tires (including the spare) if moving from radial to bias-ply tires.**
- **Using tires and wheels other than the recommended sizes could cause unusual handling characteristics and poor vehicle control, resulting in a serious accident.**

(Continued)

ON ENG 7.qxp 3/18/2019 3:01 PM Page 47

(Continued)

- **Wheels that do not meet Kia's specifications may fit poorly and result in damage to the vehicle or unusual handling and poor vehicle control.**
- **It is best to replace all four tires at the same time. If that is not possible, or necessary, then replace the two front or two rear tires as a pair. Replacing just one tire can seriously affect your vehicle's handling.**
- **The ABS works by comparing the speed of the wheels. The tire size affects wheel speed. When replacing tires, all 4 tires must use the same size originally supplied with the vehicle. Using tires of a different size can cause the ABS (Anti-lock Brake System) and ESC (Electronic Stability Control) to work irregularly.**

Compact spare tire replacement (if equipped)

A compact spare tire has a shorter tread life than a regular size tire. Replace it when you can see the tread wear indicator bars on the tire. The replacement compact spare tire should be the same size and design tire as the one provided with your new vehicle and should be mounted on the same compact spare tire wheel. The compact spare tire is not designed to be mounted on a regular size wheel, and the compact spare tire wheel is not designed for mounting a regular size tire.

Wheel replacement

When replacing the metal wheels for any reason, make sure the new wheels are equivalent to the original factory units in diameter, rim width and offset.

⚠ WARNING

A wheel that is not the correct size may adversely affect wheel and bearing life, braking and stopping abilities, handling characteristics, ground clearance, body-to-tire clearance, snow chain clearance, speedometer and odometer calibration, headlight aim and bumper height.

ON ENG 7.qxp 3/18/2019 3:01 PM Page 48

Tire traction

Tire traction can be reduced if you drive on worn tires, tires that are improperly inflated or on slippery road surfaces. Tires should be replaced when tread wear indicators appear. Slow down whenever there is rain, snow or ice on the road to reduce the possibility of losing control of the vehicle.

Tire maintenance

In addition to proper inflation, correct wheel alignment helps to decrease tire wear. If you find a tire is worn unevenly, have your dealer check the wheel alignment.

When you have new tires installed, make sure they are balanced. This will increase vehicle ride comfort and tire life. Additionally, a tire should always be rebalanced if it is removed from the wheel.

Tire sidewall labeling

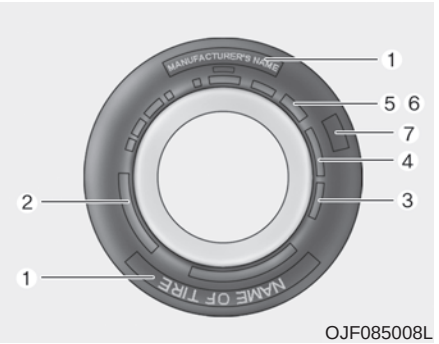

OJF085008L

This information identifies and describes the fundamental characteristics of the tire and also provides the tire identification number (TIN) for safety standard certification. The TIN can be used to identify the tire in case of a recall.

ON ENG 7.qxp 3/18/2019 3:01 PM Page 49

1. Manufacturer or brand name

Manufacturer or Brand name is shown.

2. Tire size designation

A tire's sidewall is marked with a tire size designation. You will need this information when selecting replacement tires for your vehicle. The following explains what the letters and numbers in the tire size designation mean.

Example tire size designation:

(These numbers are provided as an example only; your tire size designator could vary depending on your vehicle.)

P235/55R19 108T

P - Applicable vehicle type (tires marked with the prefix "P" are intended for use on passenger vehicles or light trucks; however, not all tires have this marking).

235 - Tire width in millimeters.

55 - Aspect ratio. The tire's section height as a percentage of its width.

R - Tire construction code (Radial).

19 - Rim diameter in inches.

108 - Load Index, a numerical code associated with the maximum load the tire can carry.

T - Speed Rating Symbol. See the speed rating chart in this section for additional information.

Wheel size designation

Wheels are also marked with important information that you need if you ever have to replace one. The following explains what the letters and numbers in the wheel size designation mean.

Example wheel size designation:

7.5JX19

7.5 - Rim width in inches.

J - Rim contour designation.

19 - Rim diameter in inches.

ON ENG 7.qxp 3/18/2019 3:01 PM Page 50

Tire speed ratings

The chart below lists many of the different speed ratings currently being used for passenger car tires. The speed rating is part of the tire size designation on the sidewall of the tire. This symbol corresponds to that tire's designed maximum safe operating speed.

Speed Rating Symbol	Maximum Speed
S	180 km/h (112 mph)
T	190 km/h (118 mph)
H	210 km/h (130 mph)
V	240 km/h (149 mph)
W	270 km/h (168 mph)
Y	300 km/h (186 mph)

3. Checking tire life
(TIN : Tire Identification Number)

Any tires that are over 6 years old, based on the manufacturing date, (including the spare tire) should be replaced by new ones. You can find the manufacturing date on the tire sidewall (possibly on the inside of the wheel), displaying the DOT Code. The DOT Code is a series of numbers on a tire consisting of numbers and English letters. The manufacturing date is designated by the last four digits (characters) of the DOT code.

DOT : XXXX XXXX OOOO

The front part of the DOT means a plant code number, tire size and tread pattern and the last four numbers indicate week and year manufactured.

For example:

DOT XXXX XXXX 1619 represents that the tire was produced in the 16th week of 2019.

⚠ WARNING - Tire age

Tires degrade over time, even when they are not being used.

Regardless of the remaining tread, we recommend that tires be replaced after approximately six (6) years of normal service. Heat caused by hot climates or frequent high loading conditions can accelerate the aging process. Failure to follow this warning can result in sudden tire failure, which could lead to a loss of control and an accident involving serious injury or death.

ON ENG 7.qxp 3/18/2019 3:01 PM Page 51

4. Tire ply composition and material

The number of layers or plies of rubber-coated fabric in the tire. Tire manufacturers also must indicate the materials in the tire, which include steel, nylon, polyester, and others. The letter "R" means radial ply construction; the letter "D" means diagonal or bias ply construction; and the letter "B" means belted-bias ply construction.

5. Maximum permissible inflation pressure

This number is the greatest amount of air pressure that should be put in the tire. Do not exceed the maximum permissible inflation pressure. Refer to the Tire and Loading Information label for recommended inflation pressure.

6. Maximum load rating

This number indicates the maximum load in kilograms and pounds that can be carried by the tire. When replacing the tires on the vehicle, always use a tire that has the same load rating as the factory installed tire.

7. Uniform tire quality grading

Quality grades can be found where applicable on the tire sidewall between tread shoulder and maximum section width.

For example:

TREADWEAR 200

TRACTION AA

TEMPERATURE A

Tread wear

The tread wear grade is a comparative rating based on the wear rate of the tire when tested under controlled conditions on a specified government test course. For example, a tire graded 150 would wear one-and-a-half times (1½) as well on the government course as a tire graded 100.

The relative performance of tires depends upon the actual conditions of their use, however, and may depart significantly from the norm due to variations in driving habits, service practices and differences in road characteristics and climate.

These grades are molded on the side-walls of passenger vehicle tires. The tires available as standard or optional equipment on your vehicle may vary with respect to grade.

ON ENG 7.qxp 3/18/2019 3:01 PM Page 52

Traction - AA, A, B & C

The traction grades, from highest to lowest, are AA, A, B and C. Those grades represent the tire's ability to stop on wet pavement as measured under controlled conditions on specified government test surfaces of asphalt and concrete. A tire marked C may have poor traction performance.

Temperature -A, B & C

The temperature grades are A (the highest), B, and C, representing the tire's resistance to the generation of heat and its ability to dissipate heat when tested under controlled conditions on a specified indoor laboratory test wheel.

Sustained high temperature can cause the material of the tire to degenerate and reduce tire life, and excessive temperature can lead to sudden tire failure. Grades B and A represent higher levels of performance on the laboratory test wheel than the minimum required by law.

⚠ WARNING

The traction grade assigned to this tire is based on straight-ahead braking traction tests, and does not include acceleration, cornering, hydroplaning, or peak traction characteristics.

⚠ WARNING - Tire temperature

The temperature grade for this tire is established for a tire that is properly inflated and not overloaded. Excessive speed, underinflation, or excessive loading, either separately or in combination, can cause heat build-up and possible sudden tire failure. This can cause loss of vehicle control and serious injury or death.

Low aspect ratio tire (if equipped)

Low aspect ratio tires, whose aspect ratio is lower than 50, are provided for sporty looks.

Because the low aspect ratio tires are optimized for handling and braking, it may be more uncomfortable to ride in and there is more noise compare with normal tires.

ON ENG 7.qxp 3/18/2019 3:01 PM Page 53

⚠ CAUTION

Because the sidewall of the low aspect ratio tire is shorter than the normal, the wheel and tire of the low aspect ratio tire is easier to be damaged. So, follow the instructions below.

- ***When driving on a rough road or off road, drive cautiously because tires and wheels may be damaged. And after driving, inspect tires and wheels.***
- ***When passing over a pothole, speed bump, manhole, or curb stone, drive slowly so that the tires and wheels are not damaged.***
- ***If the tire is impacted, inspect the tire condition or contact a professional workshop. Kia recommends to visit an authorized Kia dealer/service partner.***
- ***To prevent damage to the tire, inspect the tire condition and pressure every 3,000km.***

⚠ CAUTION

- ***It is not easy to recognize the tire damage with your own eyes. But if there is the slightest hint of tire damage, even though you cannot see the tire damage with your own eyes, have the tire checked or replaced because the tire damage may cause air leakage from the tire.***
- ***If the tire is damaged by driving on a rough road, off road, pothole, manhole, or curb stone, it will not be covered by the warranty.***
- ***You can find out the tire information on the tire sidewall.***

ON ENG 7.qxp 3/18/2019 3:01 PM Page 54

FUSES

■ Blade type



■ Cartridge type



■ Multi fuse

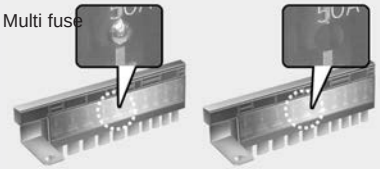

■ BFT



OJF075021

❊ Left side : Normal
Right side : Blown

A vehicle's electrical system is protected from electrical overload damage by fuses.

This vehicle has 2 (or 3) fuse panels, one located in the driver's side panel bolster, the others in the engine compartment near the battery.

If any of your vehicle's lights, accessories, or controls do not work, check the appropriate circuit fuse. If a fuse has blown, the element inside the fuse will melt.

If the electrical system does not work, first check the driver's side fuse panel.

Before replacing a blown fuse, disconnect the negative battery cable.

Always replace a blown fuse with one of the same rating.

If the replacement fuse blows, this indicates an electrical problem. Avoid using the system involved and immediately consult a professional workshop. Kia recommends to consult an authorized Kia dealer/service partner.

Three kinds of fuses are used: blade type for lower amperage rating, cartridge type, and multi fuse for higher amperage ratings.

⚠ WARNING - Fuse replacement

- **Never replace a fuse with anything but another fuse of the same rating.**
- **A higher capacity fuse could cause damage and possibly a fire.**
- **Never install a wire or aluminum foil instead of the proper fuse even as a temporary repair. It may cause extensive wiring damage and a possible fire.**
- **Do not arbitrarily modify or add-on electric wiring of the vehicle.**

⚠ CAUTION

Do not use a screwdriver or any other metal object to remove fuses because it may cause a short circuit and damage the system.

✻ NOTICE

The actual fuse/relay panel label may differ from equipped items.

ON ENG 7.qxp 3/18/2019 3:01 PM Page 55

⚠ CAUTION

- ***When replacing a blown fuse or relay with a new one, make sure the new fuse or relay fits tightly into the clips. The incomplete fastening fuse or relay may cause the vehicle wiring and electric systems damage and a possible fire.***
- ***Do not remove fuses, relays and terminals fastened with bolts or nuts. The fuses, relays and terminals may be fastened incompletely, and it may cause a possible fire. If fuses, relays and terminals fastened with bolts or nuts are blown, consult a professional workshop. Kia recommends to consult an authorized Kia dealer/service partner.***
- ***Do not input any other objects except fuses or relays into fuse/relay terminals such as a driver or wiring. It may cause contact failure and system malfunction.***

(Continued)

(Continued)

- ***Do not plug in screwdrivers or aftermarket wiring into the terminal originally designed for fuse and relays only. The electrical system and wiring of the vehicle interior may be damaged or burned due to contact failure.***

Inner panel fuse replacement



OON078018L

1. Turn the ignition switch and all other switches off.
2. Open the fuse panel cover.

If the switch is located in the “OFF”, caution will be displayed in the cluster.

ON ENG 7.qxp 3/18/2019 3:01 PM Page 56

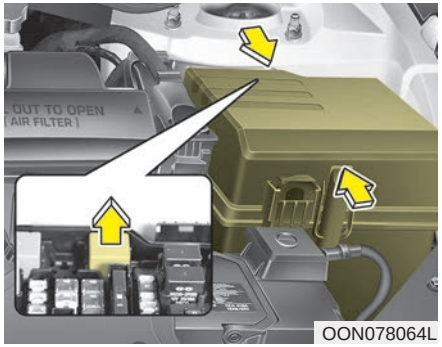

OON078064L

3. Pull the suspected fuse straight out. Use the removal tool provided in the main fuse box in the engine compartment.
4. Check the removed fuse; replace it if it is blown.

   Spare fuses are provided in the instrument panel fuse panel (or in the engine compartment fuse panel).
5. Push in a new fuse of the same rating, and make sure it fits tightly in the clips.

If it fits loosely, consult a professional workshop. Kia recommends to consult an authorized Kia dealer/service partner.

If you do not have a spare, use a fuse of the same rating from a circuit you may not need for operating the vehicle, such as the cigarette lighter fuse.

If the headlights or taillights, stoplights, courtesy lamp, day time running lights (D.R.L) do not work and the fuses are OK, check the fuse panel in the engine compartment. If a fuse is blown, it must be replaced.

Engine compartment fuse replacement

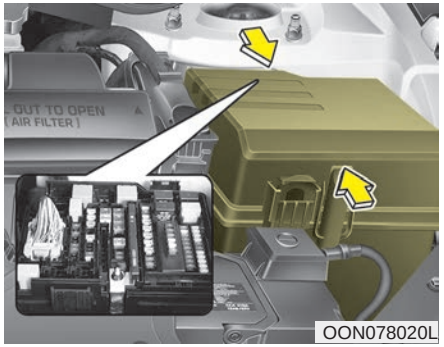

OON078020L

1. Turn the ignition switch and all other switches off.
2. Remove the fuse panel cover by pressing the tab and pulling the cover up. When the blade type fuse is disconnected, remove it by using the clip designed for changing fuses located in the engine room fuse box. Upon removal, securely insert reserve fuse of equal quantity.

ON ENG 7.qxp 3/18/2019 3:01 PM Page 57

3. Check the removed fuse; replace it if it is blown. To remove or insert the fuse, use the fuse puller in the engine compartment fuse panel.
4. Push in a new fuse of the same rating, and make sure it fits tightly in the clips. If it fits loosely, consult a professional workshop. Kia recommends to consult an authorized Kia dealer/service partner.

⚠ CAUTION

After checking the fuse panel in the engine compartment, securely install the fuse panel. If not, cover through the audible clicking sound. Electrical failures may occur from water contact.

Multi fuse

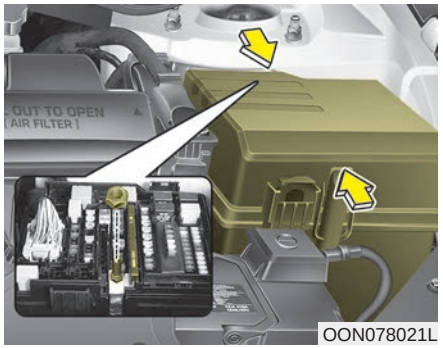

If the multi fuse is blown, it must be removed as follows:

1. Disconnect the negative battery cable.
2. Remove the nuts shown in the picture above.
3. Replace the fuse with a new one of the same rating.
4. Reinstall in the reverse order of removal.

✻ NOTICE

If the multi fuse is blown, consult a professional workshop. Kia recommends to consult an authorized Kia dealer/service partner.

ON ENG 7.qxp 3/18/2019 3:02 PM Page 58

Main fuse

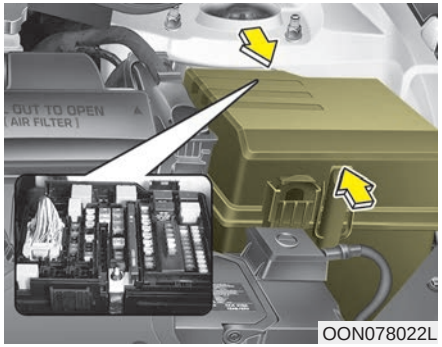

OON078022L

If the main fuse is blown, it must be removed as follows:

1. Turn off the engine.
2. Disconnect the negative battery cable.
3. Remove the nuts shown in the picture above.
4. Replace the fuse with a new one of the same rating.
5. Reinstall in the reverse order of removal

Battery fuse

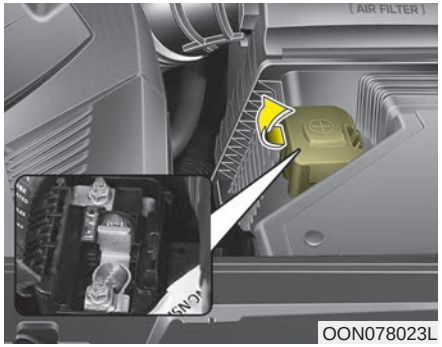

OON078023L

If the battery fuse is blown, it must be removed as follows:

1. Disconnect the negative battery cable.
2. Remove the nuts shown in the picture below.
3. Replace the fuse with a new one of the same rating.
4. Reinstall in the reverse order of removal.

✻ NOTICE

The electronic system may not function correctly even when the engine room and internal fuse box's individual fuses are not disconnected. In such case the cause of the problem may be disconnection of the main fuse (BFT type), which is located inside the positive battery terminal (+) cap. Since the main fuse is designed more intricately than other parts, visit a professional workshop. Kia recommends to visit the nearest authorized Kia dealer/service partner.

⚠ CAUTION

Visually inspect the battery cap for secure closing. If the battery cap is not securely latched, the electrical system may be damaged to due influx of moisture into the system.

ON ENG 7.qxp 3/18/2019 3:02 PM Page 59

Fuse/relay panel description

■ Driver's side fuse panel



OON078024L

■ Engine compartment fuse panel

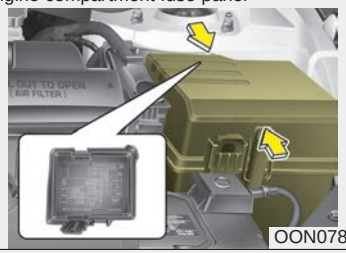

OON078027L

■ Engine compartment fuse panel (Battery terminal cover)

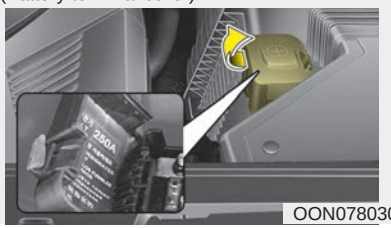

OON078030L

Inside the fuse/relay panel covers, you can find the fuse/relay label describing fuse/relay name and capacity.

✻ NOTICE

Not all fuse panel descriptions in this manual may be applicable to your vehicle. It is accurate at the time of printing. When you inspect the fuse panel in your vehicle, refer to the fuse panel label.

ON ENG 7.qxp 3/18/2019 3:02 PM Page 60

Driver's side fuse panel

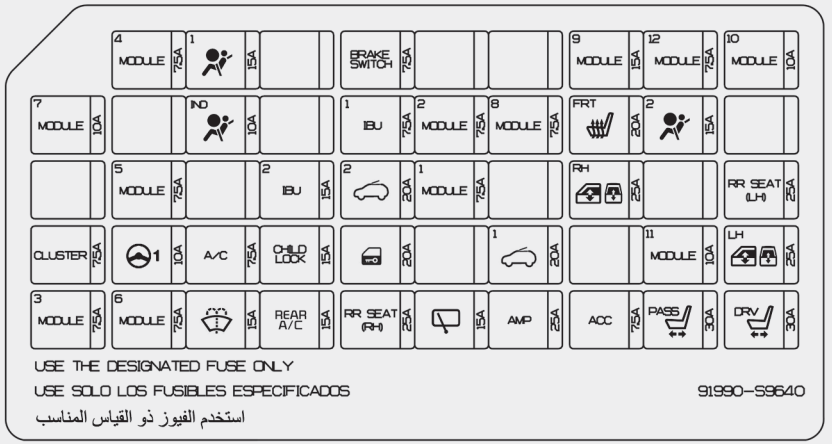

OON078026L

ON ENG 7.qxp 3/18/2019 3:02 PM Page 61

Instrument panel (Driver's side fuse panel)

Symbol	Fuse rating	Circuit Protected
4 MODULE	7.5A	Auto Transmission Shift Lever Switch, Driver Door Module, Stop Lamp Switch
1 	15A	SRS (Supplemental Restraint System) Control Module
BRAKE SWITCH	10A	IBU (Integrated Body Control Unit), Stop Lamp Switch
9 MODULE	15A	Instrument Cluster, A/V & Navigation Head Unit, Audio,Front A/C Control Module, Driver IMS (Integrated memory system) Control Module,Driver Door Module, Driver/Passenger Power Outside Mirror
12 MODULE	7.5A	Head-Up DISPLAY
10 MODULE	10A	Data Link Connector, Blind-Spot Collision Warning Unit LH/RH, Rear A/C Control Module, Electro Chromic Mirror, Front Wireless Charger, Front Console Switch
7 MODULE	10A	Head Lamp LH/RH, Crash Pad Switch
IND 	10A	Instrument Cluster
1 IBU	7.5A	IBU (Integrated Body Control Unit) (Mirror B+)
2 MODULE	7.5A	Surround View Monitor Unit, AC Inverter Unit, AC Inverter Outlet, Front Air Ventilation Seat Control Module, Front Seat Warmer Control Module, 2nd Air Ventilation Seat Control Module LH/RH, 2nd Seat Warmer Control Module LH/RH
8 MODULE	7.5A	Rain Sensor, Hazard Switch, Mood Lamp Control Unit,Driver/Passenger Smart Key Outside Handle, Driver/Passenger Mood Lamp, Rear Door Mood Lamp LH/RH,Driver/Passenger Door Mood Lamp
FRT 	20A	Front Air Ventilation Seat Control Module, Front Seat Warmer Control Module

ON ENG 7.qxp 3/18/2019 3:02 PM Page 62

Symbol	Fuse rating	Circuit Protected
	15A	SRS (Supplemental Restraint System) Control Module
5 MODULE	7.5A	IBU (Integrated Body Control Unit), Crash Pad Switch, Multifunction Camera Unit,Smart Cruise Control Radar, Auto Transmission Shift Lever Indicator,4WD ECM, Electric Parking Brake Switch,Front Console Switch
2 IBU	15A	IBU (Integrated Body Control Unit) (B+)
	20A	Rear Sunroof Controller
1 MODULE	7.5A	IBU (Integrated Body Control Unit) (IG2)
RH 	25A	Passenger Safety Power Window Module,Rear Safety Power Window Module RH,Rear Power Window Switch RH
RR SEAT (LH)	25A	2nd Air Ventilation Seat Control Module LH,2nd Seat Warmer Control Module LH,2nd Seat LH Reclining Folding Actuator
CLUSTER	7.5A	Instrument Cluster, Head-Up Display
 1	10A	MDPS (Motor Driven Power Steering) Unit (C-MDPS (Motor Driven Power Steering))
A/C	7.5A	Front A/C Control Module, Rear A/C Control Module,E/R Junction Block (RLY. 1 (Front Blower Relay),RLY. 11 (Rear Blower Relay))
CHILD LOCK	15A	ICM Relay Box (Child Lock Relay, Child Unlock Relay)
	20A	Door Lock Relay, Door Unlock Relay, Tail Gate Relay
1 	20A	Front Sunroof Controller

ON ENG 7.qxp 3/18/2019 3:02 PM Page 63

Symbol	Fuse rating	Circuit Protected
11 MODULE	10A	Rear Occupant Detection Sensor
LH	25A	Driver Safety Power Window Module,Rear Safety Power Window Module LH,Rear Power Window Switch LH
3 MODULE	7.5A	IBU (Integrated Body Control Unit) (IG1)
6 MODULE	7.5A	A/V & Navigation Head Unit, Audio, Center Facia Keyboard,Front A/C Control Module, Driver/Passenger Warmer Switch,Driver/Passenger Warmer LIN Switch, Electro Chromic Mirror,Front Air Ventilation Seat Control Module,Front Seat Warmer Control Module, Driver IMS (Integrated memory system) Control Module,2nd Air Ventilation Seat Control Module LH/RH,2nd Seat Warmer Control Module LH/RH,Rear Power Window Switch LH/RH
	15A	Multifunction Switch
RR SEAT (RH)	25A	2nd Air Ventilation Seat Control Module RH,2nd Seat Warmer Control Module RH,2nd Seat RH Reclining Folding Actuator
AMP	25A	AMP (Amplifier)
	15A	Rear Wiper Relay, Rear Wiper Motor
ACC	7.5A	IBU (Integrated Body Control Unit), AMP, Surround View Monitor Unit, Center Facia Keyboard,A/V & Navigation Head Unit, Audio, Front Wireless Charger
PASS	30A	Passenger Seat Manual Switch
DRV	30A	Driver IMS (Integrated memory system) Control Module, Driver Seat Manual Switch

ON ENG 7.qxp 3/18/2019 3:02 PM Page 64

Engine compartment fuse panel

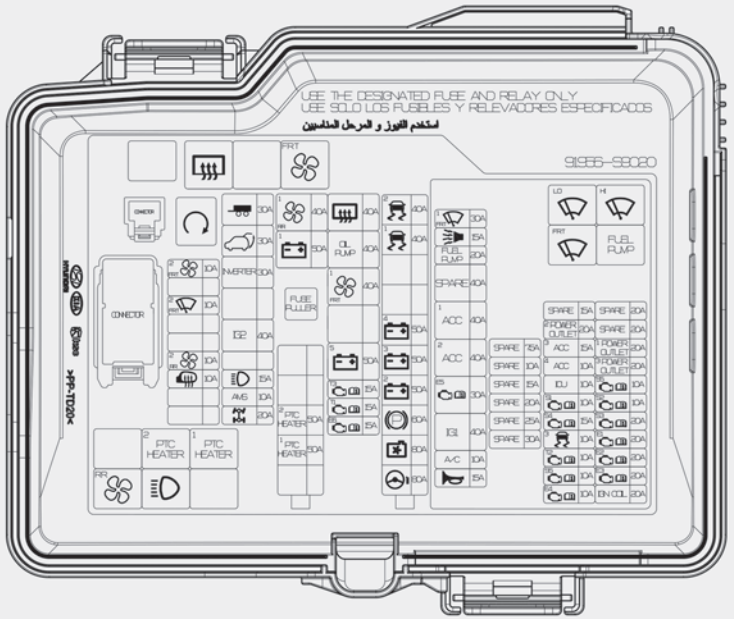

OON078029L

ON ENG 7.qxp 3/18/2019 3:02 PM Page 65

Engine compartment fuse panel (Battery terminal cover)



OON078031L

ON ENG 7.qxp 3/18/2019 3:02 PM Page 66

Engine room compartment fuse panel

Fuse Name	Symbol	Fuse rating	Circuit Protected
MULTI FUSE		40A	ESP (Electronic Stability Program Control Module
		40A	ESP (Electronic Stability Program Control Module
		50A	ICU Junction Block (Fuse - Rain Sensor, Hazard Switch, Mood Lamp Control Unit,Driver/Passenger Smart Key Outside Handle, Driver/Passenger Mood Lamp, Rear Door Mood Lamp LH/RH,Driver/Passenger Door Mood Lamp/Front Air Ventilation Seat Control Module, Front Seat Warmer Control Module/Passenger Safety Power Window Module,Rear Safety Power Window Module RH,Rear Power Window Switch RH/Front Sunroof Controller/AMP (Amplifier))
		50A	ICU Junction Block (Fuse - 2nd Air Ventilation Seat Control Module LH,2nd Seat Warmer Control Module LH,2nd Seat LH Reclining Folding Actuator/Rear Occupant Detection Sensor/Driver Safety Power Window Module,Rear Safety Power Window Module LH,Rear Power Window Switch LH/Passenger Seat Manual Switch/Driver IMS (Integrated memory system) Control Module, Driver Seat Manual Switch)
		50A	ICU Junction Block (IPS8/IPS10/IPS11/IPS13/IPS14/IPS15)
		60A	ESP (Electronic Stability Program Control Module
		80A	Cooling Fan Controller
		80A	MDPS (Motor Driven Power Steering) Unit (Column Type)

ON ENG 7.qxp 3/18/2019 3:02 PM Page 67

Fuse Name	Symbol	Fuse rating	Circuit Protected
FUSE		40A	Rear Heated Relay
		40A	Front Blower Relay
		50A	ICU Junction Block (Fuse - IBU, Stop Lamp Switch/IBU (Mirror B+)/IBU (B+)/Rear Sunroof Controller/ICM Relay Box (Child Lock Relay, Child Unlock Relay)/Door Lock Relay, Door Unlock Relay, Tail Gate Relay/IBU, Stop Lamp Switch3/IBU, Stop Lamp Switch4)
		15A	TCM (Transmission Control Module)
		15A	TCM (Transmission Control Module)
		15A	ECM (Engine Control Module)
		40A	Rear Blower Relay
		50A	ICU Junction Block (Long Term Load Latch Relay (Fuse - Instrument Cluster, A/V & Navigation Head Unit, Audio,Front A/C Control Module, Driver IMS (Integrated memory system) Control Module,Driver Door Module, Driver/Passenger Power Outside Mirror/F/8), Short Term Load Latch Relay (Fuse - Data Link Connector, Blind-Spot Collision Warning Unit LH/RH, Rear A/C Control Module, Electro Chromic Mirror, Front Wireless Charger, Front Console Switch/SRS Control Module),IPS1/IPS2/IPS3/IPS4/IPS5/IPS6/IPS7,)
		30A	Power Tail Gate Module
	INVERTER	30A	AC Inverter Unit
	IG2	40A	Start Relay, PCB (Printed Circuit Board) Block (IG2 Relay)
		15A	Head Lamp HI Relay

ON ENG 7.qxp 3/18/2019 3:02 PM Page 68

Fuse Name	Symbol	Fuse rating	Circuit Protected
FUSE	AMS	10A	Battery Sensor
		20A	4WD ECM (Engine Control Module)
		10A	Front A/C Control Module (Auto A/C)
		10A	IBU, Front Wiper Motor, PCB (Printed Circuit Board) Block (Wiper Low Relay)
		10A	Rear A/C Control Module
		10A	Front A/C Control Module, Driver/Passenger Power Outside Mirror (Defogger)
		30A	Wiper Front Relay
		15A	B/Alarm Horn Relay
	FUEL PUMP	20A	Fuel Pump Relay
	2 POWER OUTLET	20A	Front Power Outlet
	3 ACC	15A	Rear USB Charger, Luggage USB Charger, Driver/Passenger Seat Cushion USB Charger
	1 POWER OUTLET	20A	Luggage Power Outlet
	4 ACC	10A	Front USB Charger, Rear USB Charger RH
	3 POWER OUTLET	20A	Rear Power Outlet

ON ENG 7.qxp 3/18/2019 3:02 PM Page 69

Fuse Name	Symbol	Fuse rating	Circuit Protected
FUSE	**ICU**	10A	ICU Junction Block (Fuse - IBU, Stop Lamp Switch7)
	S5	10A	Oil Pump Solenoid
	S1	10A	Fuel Pump Relay
	S2	10A	A/C Relay, Purge Control Solenoid Valve, Oil Control Valve #1/#2/#3/#4 (Intake/Exhaust), Variable
	S4	15A	Oxygen Sensor #1/#2/#3/#4
	S3	20A	Cooling Fan Controller
	3	10A	ESP (Electronic Stability Program Control Module, Data Link Connector
	E1	20A	ECM (Engine Control Module)
	A/C	10A	A/C Relay
	T2	10A	TCM (Transmission Control Module), Transaxle Range Switch
	E2	20A	ECM (Engine Control Module)
		15A	Horn Relay
	E3	20A	ECM (Engine Control Module)
	E4	10A	ECM (Engine Control Module)

ON ENG 7.qxp 3/18/2019 3:02 PM Page 70

Fuse Name	Symbol	Fuse rating	Circuit Protected
FUSE	**IGN COIL**	20A	Ignition Coil #1/#2/#3/#4/#5/#6
	[1] ACC	40A	ACC1 Relay
	[2] ACC	40A	ACC2 Relay
	E5	30A	Engine Control Relay
	IG1	40A	IG1 Relay

ON ENG 7.qxp 3/18/2019 3:02 PM Page 71

Relay

Symbol	Relay Name	Type
FRT	Front Blower Relay	MINI
	Rear Heated Relay	MINI
	Start Relay	MICRO
	Head Lamp HI Relay	MICRO
RR	Rear Blower Relay	MICRO

ON ENG 7.qxp 3/18/2019 3:02 PM Page 72

LIGHT BULBS

Bulb replacement precaution

Please prepare bulbs with appropriate standards in case of emergencies. Refer to “Bulb Wattage” in chapter 8.

When changing bulbs and sorts, first turn off the engine at a safe place, firmly apply the side brake and take out the battery's negative (-) terminal.

⚠ WARNING - Working on the lights

Prior to working on the light, firmly apply the parking brake, ensure that the ignition switch is turned to the LOCK position and turn off the lights to avoid sudden movement of the vehicle and burning your fingers or receiving an electric shock.

Use only the bulbs of the specified wattage.

⚠ WARNING

Be sure to replace the burned-out bulb with one of the same wattage rating. Otherwise, it may cause extensive wiring damage and possible fire.

⚠ CAUTION

If you don't have necessary tools, the correct bulbs and the expertise, consult a professional workshop. Kia recommends to consult an authorized Kia dealer/service partner. In many cases, it is difficult to replace vehicle light bulbs because other parts of the vehicle must be removed before you can get to the bulb. This is especially true if you have to remove the headlight assembly to get to the bulb(s). Removing/ installing the headlight assembly can result in damage to the vehicle.

⚠ CAUTION

- ***If unauthentic parts or sub-standard lights are used when changing lights, it may lead to fuse disconnection and malfunction, and other wiring damages.***
- ***Do not install extra lamps or LED to the vehicle. If supplementary lights are installed, it may lead to lamp malfunction and flickering of the lights. In addition, the fuse box and other writing may be damaged.***

• Lamp part malfunction due to net-work failure

The headlamp, taillight, and fog light may lit up when the head lamp switch is turned ON, and not light up when the taillight or for light switch is turned ON. This may be cause by network failure or vehicle electrical control system malfunction. If there is a problem, have the system serviced by a professional workshop. Kia recommends to visit an authorized Kia dealer/service partner.

ON ENG 7.qxp 3/18/2019 3:02 PM Page 73

• Lamp part malfunction due to electrical control system stabilization

A normally functioning lamp may flicker momentarily. This momentary occurrence is due to stabilization unction of the vehicle's electrical on control system. If the lamp soon returns to normal, the vehicle does not require service.

However, if the lamp goes out after he momentary flickering, or If the flickering continues, have the system serviced by a professional workshop. Kia recommends to visit an authorized Kia dealer/service partner.

✻ NOTICE

• If the light bulb or lamp connector is removed from an operating lamp activated by electricity, the fuse box's electronic device may scan it as a malfunction. Therefore, a lamp malfunction history may be recorded in Diagnostic Trouble Code (DTC) in the fuse box.

• It is normal for an operating lamp may blink temporarily. Since this occurrence is due stabilization function of the vehicle's electronic control device, if the lamp lights up normally after temporary blinking, there is no problem in the vehicle.

However, if the lamp continues to blink several times or turn off completely, there may be an error in the vehicle's electronic control device. In this case, have the vehicle checked by a professional workshop immediately. Kia recommends to visit an authorized Kia dealer/service partner.

✻ NOTICE

Have the headlight aiming adjusted after an accident or after the headlight assembly is reinstalled by a professional workshop. Kia recommends to visit an authorized Kia dealer/service partner.

✻ NOTICE

After driving in heavy rain or washing, headlamp and taillamp lenses could appear frosty. This condition is caused by the temperature difference between the lamp inside and outside. This is similar to the condensation on your windows inside your vehicle during the rain and doesn't indicate a problem with your vehicle. If the water leaks into the lamp bulb circuitry, have the vehicle checked by a professional workshop. Kia recommends to visit an authorized Kia dealer/service partner.

ON ENG 7.qxp 3/18/2019 3:03 PM Page 74

Light bulb position (Front)

■ Headlamp - Type A

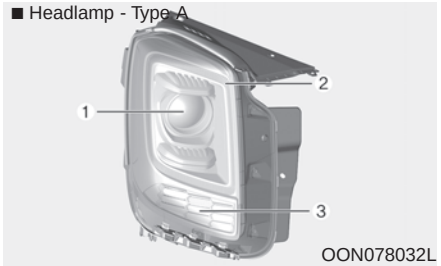

OON078032L

■ Headlamp - Type B

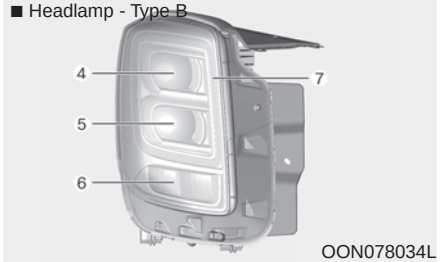

OON078034L

■ Fog lamp

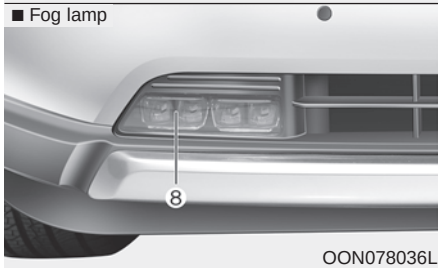

OON078036L

1. Headlamp (Bulb Type) (Low/High)
2. Position lamp/Daytime running lamp (LED Type)
3. Front turn signal lamp (Bulb Type)
4. Headlamp (LED Type) (Low)
5. Headlamp (LED Type) (Sub Low)
6. Headlamp (LED Type) (High)
7. Position lamp/Daytime running lamp/Turn signal lamp (LED Type)
8. Front fog lamp (LED Type)

Light bulb position (Rear)

■ Rear combination lamp - Type A

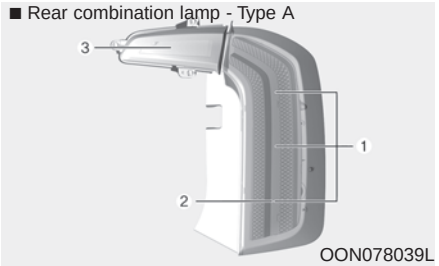

OON078039L

■ Rear combination lamp - Type B

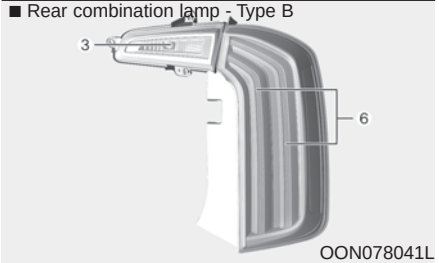

OON078041L

■ Rear turn signal lamp (Bulb Type) / Fog lamp (LED Type)

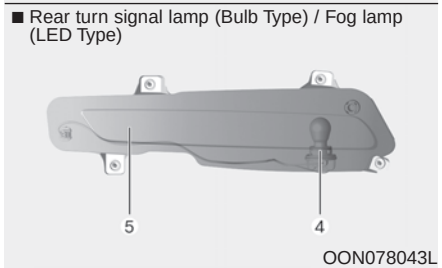

OON078043L

ON ENG 7.qxp 3/18/2019 3:03 PM Page 75

■ High mounted stop lamp (LED Type)

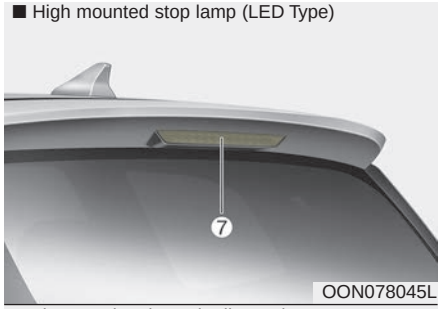

■ License plate lamp (Bulb Type)

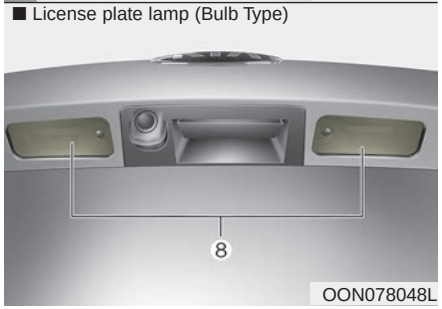

1. Tail lamp (Bulb Type)
2. Stop lamp (Bulb Type)
3. Back up lamp (Bulb Type)
4. Rear turn signal lamp (Bulb Type)
5. Fog lamp (LED Type)
6. Tail lamp/Stop lamp (LED Type)
7. High mounted stop lamp (LED Type)
8. License plate lamp (Bulb Type)

Light bulb position (Side)



(1) Side repeater lamp (LED type)

ON ENG 7.qxp 3/18/2019 3:03 PM Page 76

Headlamp (Low/High)/Front turn signal lamp bulb replacement (Headlamp Type A)

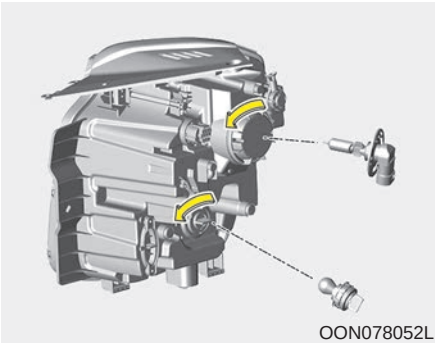

OON078052L

1. Open the hood.
2. Remove the headlamp bulb cover by turning it counterclockwise.
3. Remove the bulb-socket from the headlamp assembly by turning the bulb-socket counterclockwise until the tabs on the bulb-socket align with the slots on the headlamp assembly.
4. Remove the bulb from bulb-socket by pulling it out.
5. Insert a new bulb by inserting it into the bulb-socket.
6. Install the bulb-socket in the headlamp assembly by aligning the tabs on the bulb-socket with the slots in the headlamp assembly. Push the bulb-socket into the headlamp assembly and turn the bulb-socket clockwise.
7. Install the headlamp bulb cover by turning it clockwise.

Headlamp bulb

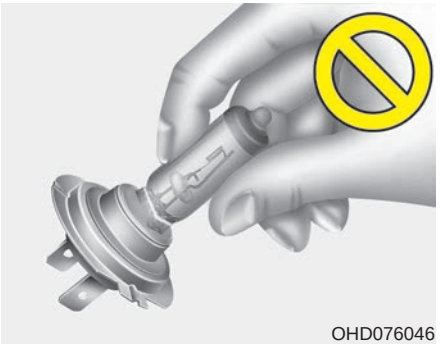

OHD076046

⚠ WARNING - Halogen bulbs

- **Halogen bulbs contain pressurized gas that will produce flying pieces of glass if broken.**

(Continued)

ON ENG 7.qxp 3/18/2019 3:03 PM Page 77

(Continued)

- **Always handle them carefully, and avoid scratches and abrasions. If the bulbs are lit, avoid contact with liquids. Never touch the glass with bare hands. Residual oil may cause the bulb to overheat and burst when lit.**

  A bulb should be operated only when installed in a headlight.
- **If a bulb becomes damaged or cracked, replace it immediately and carefully dispose of it.**
- **Wear eye protection when changing a bulb. Allow the bulb to cool down before handling it.**

Headlamp (Low/High) / Position lamp / Daytime running lamp / Turn signal lamp (LED Type) bulb replacement (Headlamp Type B)

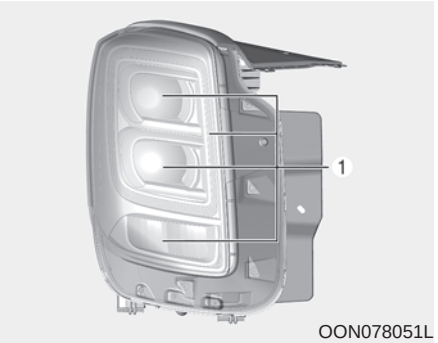

OON078051L

If the Headlamp (Low/High)/ Position lamp/Daytime running lamp/Turn signal lamp (1) does not operate, have your vehicle checked by a professional workshop. Kia recommends to visit an authorized Kia dealer/service partner.

Front fog lamp (LED type) bulb replacement

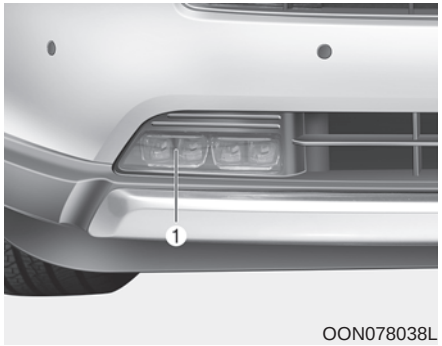

OON078038L

If the Front fog lamp does not operate, have your vehicle checked by a professional workshop. Kia recommends to visit an authorized Kia dealer/service partner.

ON ENG 7.qxp 3/18/2019 3:03 PM Page 78

Position lamp + DRL (LED type) bulb replacement (Headlamp Type A)



OON078065L

If the position lamp + DRL (1) does not operate, have your vehicle checked by a professional workshop. Kia recommends to visit an authorized Kia dealer/service partner.

Side repeater lamp bulb replacement



OON078050L

If the Side repeater lamp does not operate, have your vehicle checked by a professional workshop. Kia recommends to visit an authorized Kia dealer/service partner.

Stop and tail lamp bulb replacement (Rear combination lamp Type A)

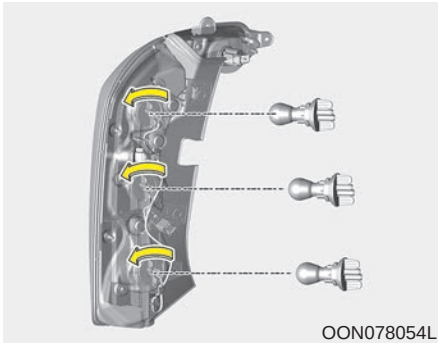

OON078054L

1. Open the tailgate.
2. Loosen the lamp assembly retaining screws with a screwdriver.
3. Remove the rear combination lamp assembly from the body of the vehicle.
4. Remove the socket from the assembly by turning the socket counterclockwise until the tabs on the socket align with the slots on the assembly.

ON ENG 7.qxp 3/18/2019 3:03 PM Page 79

5. Remove the bulb from the socket by pressing it in and rotating it counterclockwise until the tabs on the bulb align with the slots in the socket.
6. Insert a new bulb by inserting it into the socket and rotating it until it locks into place.
7. Install the socket in the assembly by aligning the tabs on the socket with the slots in the assembly and turning the socket clockwise.
8. Reinstall the lamp assembly to the body of the vehicle.

Stop and tail lamp (LED type) bulb replacement (Rear combination lamp Type B)

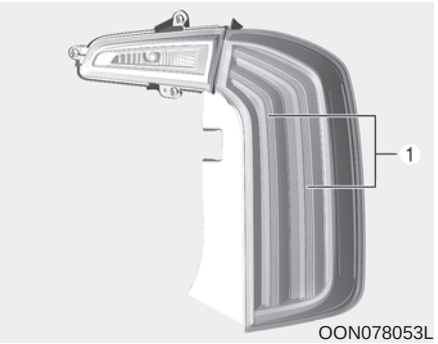

If the Stop and tail lamp (LED Type) (1) does not operate, have your vehicle checked by a professional workshop. Kia recommends to visit an authorized Kia dealer/service partner.

Back lamp bulb replacement

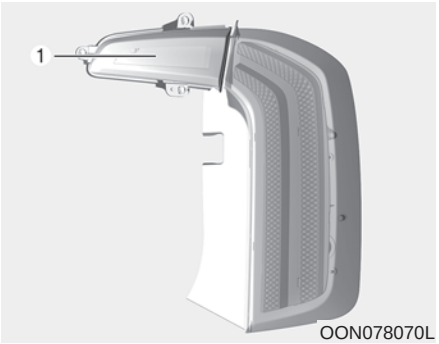

If the Back lamp bulb (Bulb Type) (1) does not operate, have your vehicle checked by a professional workshop. Kia recommends to visit an authorized Kia dealer/service partner.

ON ENG 7.qxp 3/18/2019 3:03 PM Page 80

Rear turn signal lamp (Bulb Type)/Fog lamp (LED Type) bulb replacement

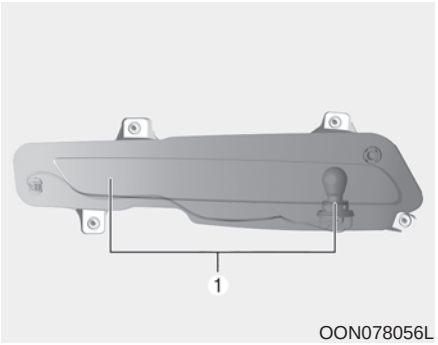

OON078056L

If the Rear turn signal lamp (Bulb Type)/Fog lamp (LED Type) does not operate, have your vehicle checked by a professional workshop. Kia recommends to visit an authorized Kia dealer/service partner.

License plate lamp bulb replacement

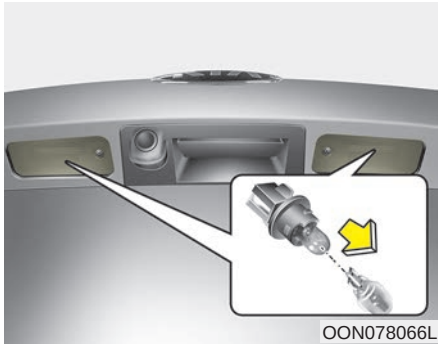

OON078066L

1. Remove the lamp cover by using a screwdriver.
2. Remove the bulb by pulling it straight out.
3. Install a new bulb in the socket.
4. Install the lamp assembly to interior.

⚠ CAUTION

Be careful not to dirty or damage the lens, lens tab, and plastic housings.

ON ENG 7.qxp 3/18/2019 3:03 PM Page 81

High mounted stop lamp bulb replacement

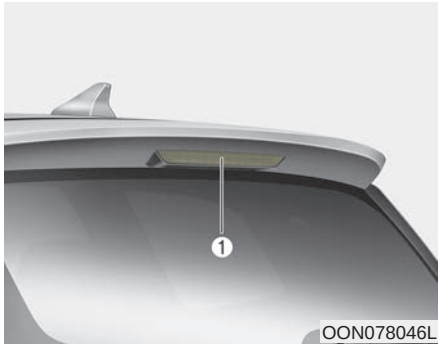

If the high mounted stop lamp (LED) does not operate, have your vehicle checked by a professional workshop. Kia recommends to visit an authorized Kia dealer/service partner.

Map lamp bulb replacement

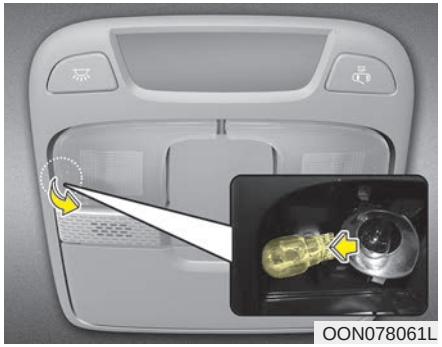

1. Using a flat-blade screwdriver, gently pry the lens cover from lamp housing.
2. Remove the bulb by pulling it straight out.
3. Install a new bulb in the socket.
4. Align the lens cover tabs with the lamp housing notches and snap the lens into place.

⚠ CAUTION

Be careful not to dirty or damage the lens, lens tab, and plastic housings.

ON ENG 7.qxp 3/18/2019 3:03 PM Page 82

Map lamp (LED type) bulb replacement


OON078058L

If the map lamp (LED type) does not operate, have your vehicle checked by a professional workshop. Kia recommends to visit an authorized Kia dealer/service partner.

The LED lamps cannot be replaced as a single unit because it is an integrated unit. The LED lamps has to be replaced with the unit.

A skilled technician should check or repair the map lamp (LED), for it may damage related parts of the vehicle.

Vanity mirror lamp (LED type) bulb replacement

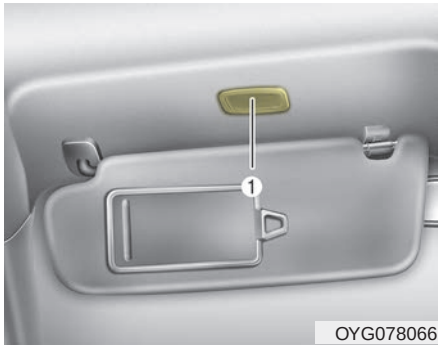

OYG078066

If the vanity mirror lamp (LED) (1), does not operate, have your vehicle checked by a professional workshop. Kia recommends to visit an authorized Kia dealer/service partner.

The LED lamps cannot be replaced as a single unit because it is an integrated unit. The LED lamps has to be replaced with the unit.

A skilled technician should check or repair the vanity mirror lamp (LED), for it may damage related parts of the vehicle.

Room lamp (Bulb Type) bulb replacement

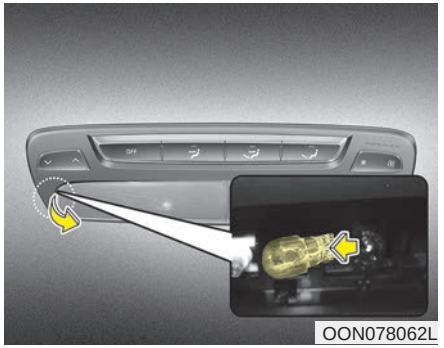
OON078062L

1. Using a flat-blade screwdriver, gently pry the lens cover from lamp housing.
2. Remove the bulb by pulling it straight out.
3. Install a new bulb in the socket.
4. Align the lens cover tabs with the lamp housing notches and snap the lens into place.

ON ENG 7.qxp 3/18/2019 3:03 PM Page 83

⚠ CAUTION

Be careful not to dirty or damage the lens, lens tab, and plastic housings.

Room lamp (LED type) bulb replacement



If the room lamp (LED) (1), does not operate, have your vehicle checked by a professional workshop.

Kia recommends to visit an authorzed Kia dealer/service partner.

The LED lamps cannot be replaced as a single unit because it is an integrated unit. The LED lamps has to be replaced with the unit.

A skilled technician should check or repair the room lamp (LED), for it may damage related parts of the vehicle.

Personal lamp bulb replacement



If the personal lamp (LED) does not operate, have your vehicle checked by a professional workshop. Kia recommends to visit an authorized Kia dealer/service partner.

ON ENG 7.qxp 3/18/2019 3:04 PM Page 84

Glove box lamp bulb replacement

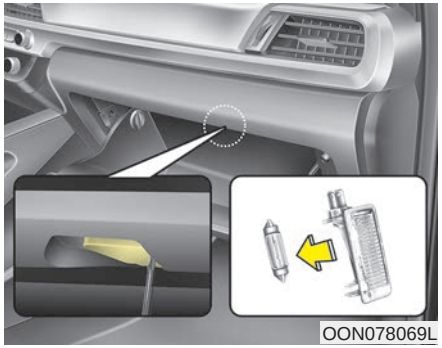
OON078069L

1. Using a flat-blade screwdriver, gently pry the lamp assembly from interior.
2. Remove the bulb by pulling it straight out.
3. Install a new bulb in the socket.
4. Install the lamp assembly to interior.

Tailgate lamp (Bulb Type) bulb replacement

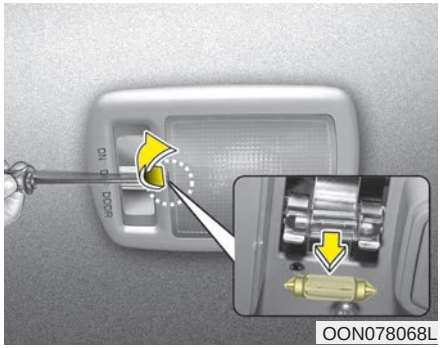
OON078068L

1. Using a flat-blade screwdriver, gently pry the lens cover from lamp housing.
2. Remove the bulb by pulling it straight out.
3. Install a new bulb in the socket.
4. Align the lens cover tabs with the lamp housing notches and snap the lens into place.

⚠ CAUTION

Be careful not to dirty or damage the lens, lens tab, and plastic housings.

ON ENG 7.qxp 3/18/2019 3:04 PM Page 85

Tailgate lamp (LED type) bulb replacement



If the trunk fog lamp (LED) does not operate, have your vehicle checked by a professional workshop. Kia recommends to visit an authorized Kia dealer/service partner.

ON ENG 7.qxp 3/18/2019 3:04 PM Page 86

APPEARANCE CARE

Exterior care

Exterior general caution

It is very important to follow the label directions when using any chemical cleaner or polish. Read all warning and caution statements that appear on the label.

Finish maintenance

Washing

To help protect your vehicle's finish from rust and deterioration, wash it thoroughly and frequently at least once a month with lukewarm or cold water.

If you use your vehicle for off-road driving, you should wash it after each off-road trip. Pay special attention to the removal of any accumulation of salt, dirt, mud, and other foreign materials. Make sure the drain holes in the lower edges of the doors and rocker panels are kept clear and clean.

Insects, tar, tree sap, bird droppings, industrial pollution and similar deposits can damage your vehicle's finish if not removed immediately.

Even prompt washing with plain water may not completely remove all these deposits. A mild soap, safe for use on painted surfaces, may be used.

After washing, rinse the vehicle thoroughly with lukewarm or cold water. Do not allow soap to dry on the finish.

⚠ CAUTION

- ***Do not use strong soap, chemical detergents or hot water, and do not wash the vehicle in direct sunlight or when the body of the vehicle is warm.***
- ***Be careful when washing the side windows of your vehicle.***

  Especially, with high-pressure water, water may leak through the windows and wet the interior.
- ***To prevent damage to the plastic parts and lamps, do not clean with chemical solvents or strong detergents.***

⚠ WARNING - Wet brakes

After washing the vehicle, test the brakes while driving slowly to see if they have been affected by water. If braking performance is impaired, dry the brakes by applying them lightly while maintaining a slow forward speed.

ON ENG 7.qxp 3/18/2019 3:04 PM Page 87

High-pressure washing

- When using high-pressure washers, make sure to maintain sufficient distance from the vehicle.

  Insufficient clearance or excessive pressure can lead to component damage or water penetration.
- Do not spray the camera, sensors or its surrounding area directly with a high pressure washer. Shock applied from high pressure water may cause the device to not operate normally.
- Do not bring the nozzle tip close to boots (rubber or plastic covers) or connectors as they may be damaged if they come into contact with high pressure water.

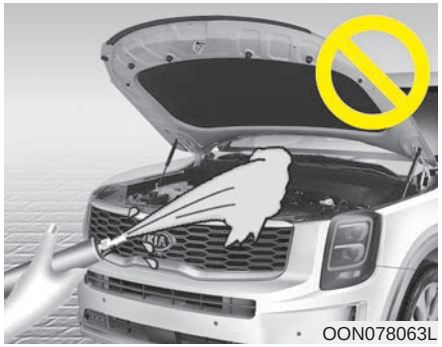

OON078063L

⚠ CAUTION

- ***Water washing in the engine compartment including high pressure water washing may cause the failure of electrical circuits located in the engine compartment.***
- ***Never allow water or other liquids to come in contact with electrical/electronic components inside the vehicle as this may damage them.***

Waxing

Wax the vehicle when water will no longer bead on the paint.
Always wash and dry the vehicle before waxing. Use a good quality liquid or paste wax, and follow the manufacturer's instructions. Wax all metal trim to protect it and to maintain its luster.
Removing oil, tar, and similar materials with a spot remover will usually strip the wax from the finish. Be sure to re-wax these areas even if the rest of the vehicle does not yet need waxing.
Do not apply wax on embossed unpainted unit, as it may tarnish the unit.

ON ENG 7.qxp 3/18/2019 3:04 PM Page 88

⚠ CAUTION

- ***Wiping dust or dirt off the body with a dry cloth will scratch the finish.***
- ***Do not use steel wool, abrasive cleaners, acid detergents or strong detergents containing high alkaline or caustic agents on chrome-plated or anodized aluminum parts. This may result in damage to the protective coating and cause discoloration or paint deterioration.***

Finish damage repair

Deep scratches or stone chips in the painted surface must be repaired promptly. Exposed metal will quickly rust and may develop into a major repair expense.

✻ NOTICE

If your vehicle is damaged and requires any metal repair or replacement, be sure the body shop applies anti-corrosion materials to the parts repaired or replaced.

Bright-metal maintenance

- To remove road tar and insects, use a tar remover, not a scraper or other sharp object.
- To protect the surfaces of bright-metal parts from corrosion, apply a coating of wax or chrome preservative and rub to a high luster.
- During winter weather or in coastal areas, cover the bright metal parts with a heavier coating of wax or preservative. If necessary, coat the parts with non-corrosive petroleum jelly or other protective compound.

ON ENG 7.qxp 3/18/2019 3:04 PM Page 89

Underbody maintenance

Corrosive materials used for ice and snow removal and dust control may collect on the underbody. If these materials are not removed, accelerated rusting can occur on underbody parts such as the fuel lines, frame, floor pan and exhaust system, even though they have been treated with rust protection.

Thoroughly flush the vehicle underbody and wheel openings with lukewarm or cold water once a month, after off-road driving and at the end of each winter. Pay special attention to these areas because it is difficult to see all the mud and dirt. It will do more harm than good to wet down the road grime without removing it. The lower edges of the doors, rocker panels, and frame members have drain holes that should not clog with dirt; trapped water in these areas can cause rusting.

⚠ WARNING

After washing the vehicle, test the brakes while driving slowly to see if they have been affected by water. If braking performance is impaired, dry the brakes by applying them lightly while maintaining a slow forward speed.

Aluminum wheel maintenance

The aluminum wheels are coated with a clear protective finish.

- Do not use any abrasive cleaner, polishing compound, solvent, or wire brushes on aluminum wheels. They may scratch or damage the finish.
- Clean the wheel when it has cooled.
- Use only a mild soap or neutral detergent, and rinse thoroughly with water. Also, be sure to clean the wheels after driving on salted roads. This helps prevent corrosion.
- Avoid washing the wheels with high-speed car wash brushes.
- Do not use any alkaline or acid detergent. It may damage and corrode the aluminum wheels coated with a clear protective finish.

ON ENG 7.qxp 3/18/2019 3:04 PM Page 90

Corrosion protection

Protecting your vehicle from corrosion

By using the most advanced design and construction practices to combat corrosion, we produce vehicles of the highest quality. However, this is only part of the job. To achieve the long-term corrosion resistance your vehicle can deliver, the owner's cooperation and assistance is also required.

Common causes of corrosion

The most common causes of corrosion on your vehicle are:

- Road salt, dirt and moisture that is allowed to accumulate underneath the vehicle.
- Removal of paint or protective coatings by stones, gravel, abrasion or minor scrapes and dents which leave unprotected metal exposed to corrosion.

High-corrosion areas

If you live in an area where your vehicle is regularly exposed to corrosive materials, corrosion protection is particularly important. Some of the common causes of accelerated corrosion are road salts, dust control chemicals, ocean air and industrial pollution.

Moisture breeds corrosion

Moisture creates the conditions in which corrosion is most likely to occur. For example, corrosion is accelerated by high humidity, particularly when temperatures are just above freezing. In such conditions, the corrosive material is kept in contact with the vehicle's surface by moisture that evaporate slowly.
Mud is particularly corrosive because it dries slowly and holds moisture in contact with the vehicle. Although the mud appears to be dry, it can still retain moisture and promote corrosion.
High temperatures can also accelerate corrosion of parts that are not properly ventilated so the moisture can be dispersed.

For all these reasons, it is particularly important to keep your vehicle clean and free of mud or accumulations of other materials. This applies not only to the visible surfaces but particularly to the underside of the vehicle.

To help prevent corrosion

You can help prevent corrosion from getting started by observing the following:

ON ENG 7.qxp 3/18/2019 3:04 PM Page 91

Keep your vehicle clean

The best way to prevent corrosion is to keep your vehicle clean and free of corrosive materials. Attention to the underside of the vehicle is particularly important.

- If you live in a high-corrosion area — where road salts are used, near the ocean, areas with industrial pollution, acid rain, etc.—, you should take extra care to prevent corrosion. In winter, hose off the underside of your vehicle at least once a month and be sure to clean the underside thoroughly when winter is over.
- When cleaning underneath the vehicle, give particular attention to the components under the fenders and other areas that are hidden from view. Do a thorough job; just dampening the accumulated mud rather than washing it away will accelerate corrosion rather than prevent it. Water under high pressure and steam are particularly effective in removing accumulated mud and corrosive materials.
- When cleaning lower door panels, rocker panels and frame members, be sure that drain holes are kept open so that moisture can escape and not be trapped inside to accelerate corrosion.

Keep your garage dry

Don't park your vehicle in a damp, poorly ventilated garage. This creates a favorable environment for corrosion. This is particularly true if you wash your vehicle in the garage or drive it into the garage when it is still wet or covered with snow, ice or mud. Even a heated garage can contribute to corrosion unless it is well ventilated so moisture is dispersed.

Keep paint and trim in good condition

Scratches or chips in the finish should be covered with "touch-up" paint as soon as possible to reduce the possibility of corrosion. If bare metal is showing through, the attention of a qualified body and paint shop is recommended.

Bird droppings : Bird droppings are highly corrosive and may damage painted surfaces in just a few hours. Always remove bird droppings as soon as possible.

Don't neglect the interior

Moisture can collect under the floor mats and carpeting and cause corrosion. Check under the mats periodically to be sure the carpeting is dry. Use particular care if you carry fertilizers, cleaning materials or chemicals in the vehicle.

These should be carried only in proper containers and any spills or leaks should be cleaned up, flushed with clean water and thoroughly dried.

ON ENG 7.qxp 3/18/2019 3:04 PM Page 92

Interior care

Interior general precautions

Prevent chemicals such as perfume, cosmetic oil, sun cream, hand cleaner, and air freshener from contacting the interior parts because they may cause damage or discoloration. If they do contact the interior parts, wipe them off immediately. If necessary, use a vinyle cleaner, see instructions for correct usage.

⚠ CAUTION

Never allow water or other liquids to come in contact with electrical/electronic components inside the vehicle as this may damage them.

⚠ CAUTION

When cleaning leather products (steering wheel, seats etc.), use neutral detergents or low alcohol content solutions. If you use high alcohol content solutions or acid/alkaline detergents, the color of the leather may fade or the surface may get stripped off.

Taking care of leather seats

- Vacuum the seat periodically to remove dust and sand on the seat. It will prevent abrasion or damage of the leather and maintain its quality.
- Wipe the natural leather seat cover often with dry or soft cloth.
- Sufficient use of a leather protective may prevent abrasion of the cover and helps maintain the color.

  Be sure to read the instructions and consult a specialist when using leather coating or protective agents.
- Leather with bright colors(beige, cream beige) is easily contaminated and clear in appearance. Clean the seats frequently.
- Avoid wiping with wet cloth. It may cause the surface to crack.

ON ENG 7.qxp 3/18/2019 3:04 PM Page 93

Cleaning the leather seats

- Remove all contaminations instantly. Refer to instructions below for removal of each contaminant.
- Cosmetic products(sunscreen, foundation, etc.)
  - Apply cleansing cream on a cloth and wipe the contaminated point. Wipe off the cream with a wet cloth and remove water with a dry cloth.
- Beverages(coffee, soft drink, etc.)
  - Apply a small amount of neutral detergent and wipe until contaminations do not smear.
- Oil
  - Remove oil instantly with absorbable cloth and wipe with stain remover for natural leather only.
- Chewing gum
  - Harden the gum with ice and remove gradually.

Fabric seat cover using precautions (If equipped)

Please clean the fabric seats regularly with a vacuum cleaner in consideration of fabric material characteristics. If they are heavily soiled with beverage stains, etc., use a suitable interior cleaner. To prevent damage to seat covers, wipe off the seat covers down to the seams with a large wiping motion and moderate pressure using a soft sponge or microfiber cloth.

Velcro closures on clothing or sharp objects may cause snagging or scratches on the surface of the seats.

Make sure not to rub such objects against the surface.

Cleaning the upholstery and interior trim

Vinyl

Remove dust and loose dirt from vinyl with a whisk broom or vacuum cleaner. Clean vinyl surfaces with a vinyl cleaner.

Fabric

Remove dust and loose dirt from fabric with a whisk broom or vacuum cleaner. Clean with a mild soap solution recommended for upholstery or carpets. Remove fresh spots immediately with a fabric spot cleaner. If fresh spots do not receive immediate attention, the fabric can be stained and its color can be affected. Also, its fire-resistant properties can be reduced if the material is not properly maintained.

ON ENG 7.qxp 3/18/2019 3:04 PM Page 94

⚠ CAUTION

Using anything but recommended cleaners and procedures may affect the fabric's appearance and fire-resistant properties.

Cleaning the lap/shoulder belt webbing

Clean the belt webbing with any mild soap solution recommended for cleaning upholstery or carpet. Follow the instructions provided with the soap. Do not bleach or re-dye the webbing because this may weaken it.

Cleaning the interior window glass

If the interior glass surfaces of the vehicle become fogged (that is, covered with an oily, greasy or waxy film), they should be cleaned with a glass cleaner. Follow the directions on the glass cleaner container.

⚠ CAUTION

Do not scrape or scratch the inside of the rear window. This may result in damage of the rear window defroster grid.

ON ENG 7.qxp 3/18/2019 3:04 PM Page 95

EMISSION CONTROL SYSTEM (IF EQUIPPED)

The emission control system of your vehicle is covered by a written limited warranty. Please see the warranty information contained in the Warranty & Maintenance book in your vehicle.

Your vehicle is equipped with an emission control system to meet all applicable emission regulations.

There are three emission control systems, as follows.

(1) Crankcase emission control system
(2) Evaporative emission control system
(3) Exhaust emission control system

In order to assure the proper function of the emission control systems, have your vehicle inspected and maintained by a professional workshop in accordance with the maintenance schedule in this manual. Kia recommends to visit an authorized Kia dealer/service partner.

Caution for the Inspection and Maintenance Test (With Electronic Stability Control (ESC) system)

- **To prevent the vehicle from misfiring during dynamometer testing, turn the Electronic Stability Control (ESC) system off by pressing the ESC switch.**
- **After dynamometer testing is completed, turn the ESC system back on by pressing the ESC switch again.**

1. Crankcase emission control system

The positive crankcase ventilation system is employed to prevent air pollution caused by blow-by gases being emitted from the crankcase. This system supplies fresh filtered air to the crankcase through the air intake hose. Inside the crankcase, the fresh air mixes with blow-by gases, which then pass through the PCV valve into the induction system.

2. Evaporative emission control system

The Evaporative Emission Control System is designed to prevent fuel vapors from escaping into the atmosphere.

Canister

Fuel vapors generated inside the fuel tank are absorbed and stored in the onboard canister. When the engine is running, the fuel vapors absorbed in the canister are drawn into the surge tank through the purge control solenoid valve.

Purge Control Solenoid Valve (PCSV)

The purge control solenoid valve is controlled by the Engine Control Module (ECM); when the engine coolant temperature is low during idling, the PCSV closes so that evaporated fuel is not taken into the engine. After the engine warms up during ordinary driving, the PCSV opens to introduce evaporated fuel to the engine.

ON ENG 7.qxp 3/18/2019 3:04 PM Page 96

3. Exhaust emission control system

The Exhaust Emission Control System is a highly effective system which controls exhaust emissions while maintaining good vehicle performance.

Engine exhaust gas precautions (carbon monoxide)

- Carbon monoxide can be present with other exhaust fumes. Therefore, if you smell exhaust fumes of any kind inside your vehicle, have it inspected and repaired immediately. If you ever suspect exhaust fumes are coming into your vehicle, drive it only with all the windows fully open. Have your vehicle checked and repaired immediately.

⚠ WARNING - Exhaust

Engine exhaust gases contain carbon monoxide (CO). Though colorless and odorless, it is dangerous and could be lethal if inhaled. Follow the instructions on this page to avoid CO poisoning.

- Do not operate the engine in confined or closed areas (such as garages) any more than what is necessary to move the vehicle in or out of the area.
- When the vehicle is stopped in an open area for more than a short time with the engine running, adjust the ventilation system (as needed) to draw outside air into the vehicle.
- Never sit in a parked or stopped vehicle for any extended time with the engine running.
- When the engine stalls or fails to start, excessive attempts to restart the engine may cause damage to the emission control system.

ON ENG 7.qxp 3/18/2019 3:04 PM Page 97

Operating precautions for catalytic converters (if equipped)

⚠ WARNING - Fire

- **A hot exhaust system can ignite flammable items under your vehicle. Do not park the vehicle over or near flammable objects, such as grass, vegetation, paper, leaves, etc.**
- **The exhaust system and catalytic system are very hot while the engine is running or immediately after the engine is turned off. Keep away from the exhaust system and catalytic, you may get burned.**

  Also, do not remove the heat sink around the exhaust system, do not seal the bottom of the vehicle or do not coat the vehicle for corrosion control. It may present a fire risk under certain conditions.

Your vehicle is equipped with a catalytic converter emission control device.

Therefore, the following precautions must be observed:

- Make sure to refuel your vehicle according to the "Fuel requirements" suggested in chapter 1.
- Do not operate the vehicle when there are signs of engine malfunction, such as misfire or a noticeable loss of performance.
- Do not misuse or abuse the engine. Examples of misuse are coasting with the ignition off and descending steep grades in gear with the ignition off.
- Do not operate the engine at high idle speed for extended periods (5 minutes or more).
- Do not modify or tamper with any part of the engine or emission control system. All inspections and adjustments must be made by a professional workshop. Kia recommends to visit an authorized Kia dealer/service center.
- Avoid driving with an extremely low fuel level. Running out of fuel could cause the engine to misfire, damaging the catalytic converter.

Failure to observe these precautions could result in damage to the catalytic converter and to your vehicle.

Additionally, such actions could void your warranties.

Specifications & Consumer information

Dimensions 8-2
Engine 8-2
Gross vehicle weight 8-3
Luggage volume 8-3
Air conditioning system 8-4
Bulb wattage 8-5
Tires and wheels 8-7
Recommended lubricants and capacities 8-8
Recommended sae viscosity number 8-10
Vehicle identification number (VIN) 8-11
Vehicle certification label 8-11
Tire specification and pressure label 8-12
Engine number 8-12
Air conditioner compressor label 8-12
Declaration of conformity 8-13

DIMENSIONS

ITEM			7 Seater	8 Seater
Overall length			5,000 mm (196.8 in)	←
Overall width			1,990 mm (78.3 in)	←
Overall height			1,750 mm (68.9 in)	←
Tread	Front	245/60 R18	1,708 mm (67.2 in)	←
		245/50 R20	1,708 mm (67.2 in)	←
	Rear	245/60 R18	1,716 mm (67.6 in)	←
		245/50 R20	1,716 mm (67.6 in)	←
Wheelbase			2,900 mm (114.1 in)	←

ENGINE

Item	Lambda II 3.8 GDI ATK
Displacement cc (cu. in)	3,778 (230.55)
Bore x Stroke mm (in.)	96 X 87 (3.78 X 3.43)
Firing order	1-2-3-4-5-6
No. of cylinders	6, V-type

GROSS VEHICLE WEIGHT

kg (lbs.)

ITEM	FWD		AWD	
	7 Seater	8 Seater	7 Seater	8 Seater
Lambda II 3.8 GDI ATK	2,552 (5,626)	2,620 (5,776)	2,615 (5,765)	2,644 (5,829)

LUGGAGE VOLUME

L (cu. ft.)

ITEM		7 Seater	8 Seater
VDA	MIN.	336 (11.9)	336 (11.9)
	MAX.	1,907 (67.3)	1,857 (65.6)

Min : Behind 3rd row.
Max : Behind front seat to roof.

AIR CONDITIONING SYSTEM

g (oz.)

ITEM	Weight of volume	Classification
Refrigerant	1,075 ± 25 (37.91 ± 0.88)	R-134a
Compressor lubricant	210 ± 10 (7.4 ± 0.35)	FD46XG (IDEMITUS)

Please contact a professional workshop for more details.
Kia recommends to contact an authorized Kia dealer/service partner.

BULB WATTAGE

Light Bulb				Bulb Type	Wattage (W)
Front	Headlamp	Low	Bulb type	HB3	60
		High	Bulb type	HB3	60
		Low	LED type	LED	LED
		High	LED type	LED	LED
	Turn signal lamp		Bulb type	28/8 2357NA	28/8
			LED type	LED	LED
	Day time running lamp/Position lamp			LED	LED
	Fog lamp			LED	LED
	Side repeater lamp			LED	LED
Rear	Rear combination lamp	Stop lamp	Bulb type	P21/5W	21/5
		Tail lamp	Bulb type	P21/5W	21/5
		Stop lamp	LED type	LED	LED
		Tail lamp	LED type	LED	LED
		Back up lamp		W16W	16
	Turn signal lamp			PY21W	21
	Fog lamp*			LED	LED
	High mounted stop lamp			LED	LED
	License plate lamp			W5W	5

(Continued)

(Continued)

Light Bulb			Bulb type	Wattage (W)
Interior	Map lamp	Bulb type	FESTOON	10
		LED type	LED	LED
	Room lamp	Bulb type	FESTOON	10
		LED type	LED	LED
	Vanity mirror lamp	Bulb type	FESTOON	5
		LED type	LED	LED
	Personal lamp*		LED	LED
	Glove box lamp*		FESTOON	5
	Cargo lamp	Bulb type	FESTOON	10
		LED type	LED	LED

* If equipped

TIRES AND WHEELS

Item	Tire size	Wheel size	Supplier	Load Capacity		Speed capacity		Inflation pressure [bar(psi, kPa)]				Wheel lug nut torque [Kgf·m (lbf·ft, N·m)]
								Normal load *3		Maximum load		
				LI *1	Kg	SS *2	Km/h	Front	Rear	Front	Rear	
Full size tire	245/60 R18	7.5JX18	Pirelli	105	925	H	210	2.4 (35, 240)	2.4 (35, 240)	2.4 (35, 240)	2.4 (35, 240)	11 ~ 13 (79 ~ 94, 107 ~ 127)
	245/50 R20	7.5JX20	Pirelli	102	850	V	240	2.4 (35, 240)	2.4 (35, 240)	2.4 (35, 240)	2.4 (35, 240)	
Compact Spare tire	T155/90 R18	4.0TX18	Kumho	113	1,150	M	130	4.2 (60, 420)	4.2 (60, 420)	4.2 (60, 420)	4.2 (60, 420)	

*1 : Load Index

*2 : Speed Symbol

*3 : Normal load - Up to 3 persons

✻ NOTICE

- **We recommend that when replacing tires, use the same originally supplied with the vehicles. If not, that affects driving performance.**
- **When driving in high altitude grades, it is natural for the atmospheric pressure to decrease. Therefore, please check the tire pressure and add more air when necessary. Additionally required tire air pressure per km above sea level: 1.5psi/km**

⚠ CAUTION

When replacing tires, use the same size originally supplied with the vehicle.
Using tires of a different size can damage the related parts or make it work irregularly.

RECOMMENDED LUBRICANTS AND CAPACITIES

To help achieve proper engine and powertrain performance and durability, use only lubricants of the proper quality. The correct lubricants also help promote engine efficiency that results in improved fuel economy.
These lubricants and fluids are recommended for use in your vehicle.

Lubricant			Volume	Classification
Engine oil *1 *2 (drain and refill) Kia RECOMMENDS RECOMMANDE РЕКОМЕНДУЕТ TOTAL QUARTZ	Gasoline Engine	Lambda II 3.8 GDI ATK	6.5 *l* (6.87 US. qt.)	ACEA A5 or above *3
Automatic transmission fluid	Gasoline Engine	Lambda II 3.8 GDI ATK	7.0 *l* (7.4 US. qt.)	ATF SP-IV(M1) Recommended : SK ATF SP4M-1, MICHANG ATF SP4M-1, S-OIL ATF SP4M-1
Coolant	Gasoline Engine	Lambda II 3.8 GDI ATK	Approx. 12.2 L (12.9 US. qt.)	Mixture of antifreeze and distilled water (Ethylene glycol base coolant for aluminum radiator)
Brake fluid	Gasoline Engine	Lambda II 3.8 GDI ATK	0.46 ± 0.02 L (0.49 ± 0.02 US. qt.)	FMVSS135 DOT-3 or DOT-4
Rear differential oil (AWD)			0.70 ± 0.05 L (0.74 ± 0.05 US. qt.)	HYPOID GEAR OIL API GL-5, SAE 75W/85 (SK HCT-5 GEAR OIL 75W/85 or equivalent)

Lubricant			Volume	Classification
Transfer case oil (AWD)	Gasoline Engine	Lambda II 3.8 GDI ATK	0.7 *l* (0.74 US. qt.)	HYPOID GEAR OIL API GL-5, SAE 75W/85 (Recommended: SK HCT-5 GEAR OIL 75W85 or equivalent)
Fuel			71 *l* (75 US. qt.)	Refer to Fuel requirements in section 1

*1 : Refer to the recommended SAE viscosity numbers on the next page.

*2 : Engine oils labeled Energy Conserving Oil are now available. Along with other additional benefits, they contribute to fuel economy by reducing the amount of fuel necessary to overcome engine friction. Often, these improvements are difficult to measure in everyday driving, but in a year's time, they can offer significant cost and energy savings.

*3 : If the ACEA A5 engine oil is not available in your country, you are able to use API service SL, IL SAC GF-3, ACEA A3.

Recommended SAE viscosity number

⚠ CAUTION

Always be sure to clean the area around any filler plug, drain plug, or dipstick before checking or draining any lubricant. This is especially important in dusty or sandy areas and when the vehicle is used on unpaved roads. Cleaning the plug and dipstick areas will prevent dirt and grit from entering the engine and other mechanisms that could be damaged.

Engine oil viscosity (thickness) has an effect on fuel economy and cold weather operating (engine start and engine oil flowability). Lower viscosity engine oils can provide better fuel economy and cold weather performance, however, higher viscosity engine oils are required for satisfactory lubrication in hot weather. Using oils of any viscosity other than those recommended could result in engine damage. When choosing an oil, consider the range of temperature your vehicle will be operated in before the next oil change. Proceed to select the recommended oil viscosity from the chart.

Temperature Range for SAE Viscosity Numbers

Temperature										
	°C	-30	-20	-10	0	10	20	30	40	50
	(°F)	-10	0	20	40	60	80	100	120	
Lambda II 3.8 GDI ATK *1										

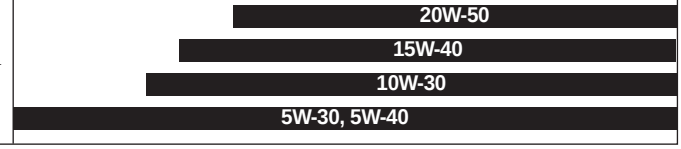

*1 : For better fuel economy, it is recommended to use the engine oil of a viscosity grade SAE 5W-30 (ACEA A5). However, if the engine oil is not available in your country, select the proper engine oil using the engine oil viscosity chart.

VEHICLE IDENTIFICATION NUMBER (VIN)

■ Frame number

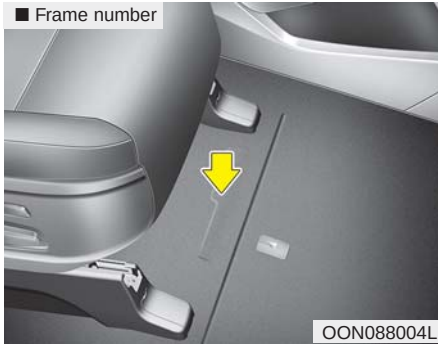

The vehicle identification number (VIN) is the number used in registering your vehicle and in all legal matters pertaining to its ownership, etc.

The number is punched on the floor under the passenger seat. To check the number, open the cover.

■ VIN label (if equipped)

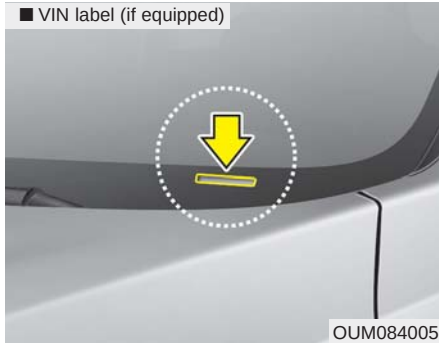

The VIN is also on a plate attached to the top of the dashboard. The number on the plate can easily be seen through the windshield from outside.

VEHICLE CERTIFICATION LABEL

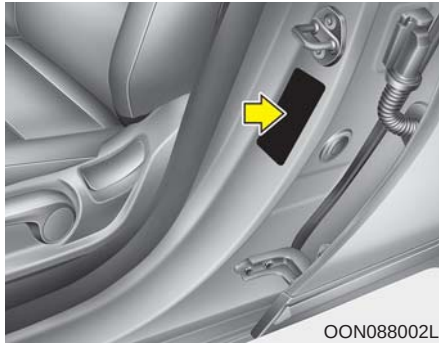

The vehicle certification label attached on the driver's (or front passenger's) side center pillar gives the vehicle identification number (VIN).

TIRE SPECIFICATION AND PRESSURE LABEL

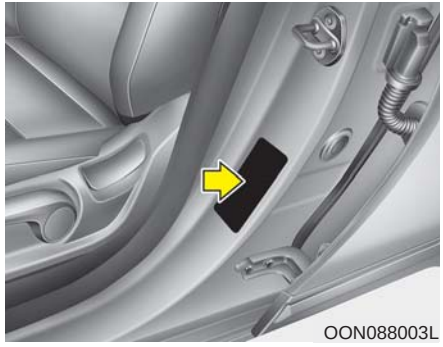

OON088003L

The tires supplied on your new vehicle are chosen to provide the best performance for normal driving.

The tire label located on the driver's side center pillar gives the tire pressures recommended for your vehicle.

ENGINE NUMBER

■ Gasoline engine (Lambda II 3.8 GDI ATK)

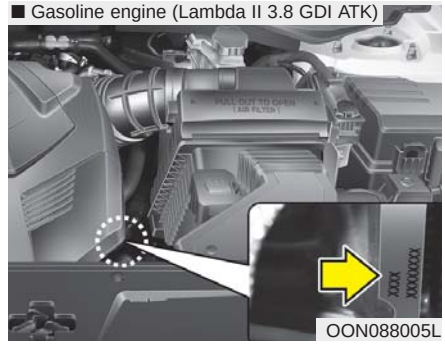

OON088005L

The engine number is stamped on the engine block as shown in the drawing.

AIR CONDITIONER COMPRESSOR LABEL

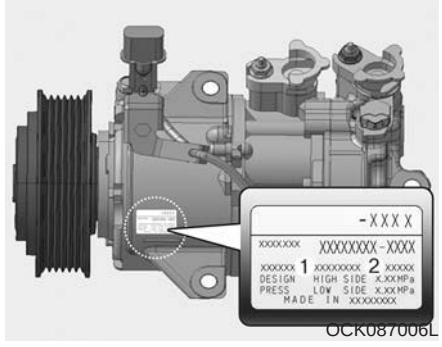

OCK087006L

A compressor label informs you the type of compressor your vehicle is equipped with such as model, supplier part number, production number, refrigerant (1) and refrigerant oil (2).

DECLARATION OF CONFORMITY

■ Example

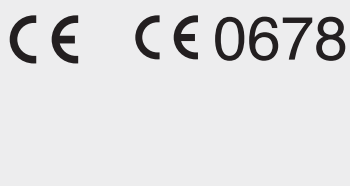

CE0678

The radio frequency components of the vehicle comply with requirements and other relevant provisions of Directive 1995/5/EC.

Further information including the manufacturer's declaration of conformity is available on Kia web site as follows;

http://www.kia-hotline.com

ON ENG Index.qxp 3/18/2019 3:20 PM Page 1

Index

ON ENG Index.qxp 3/18/2019 3:20 PM Page 2

A

AC inverter 4-199
Air bag warning label 3-77
Air bag warning light 3-57
Air bags....3-53
Operation 3-54
Air bag warning light....3-57
SRS components and functions 3-57
Driver's and passenger's front air bag 3-61
Side air bag 3-65
Curtain air bag 3-67
Inflation conditions 3-70
Non-inflation conditions 3-72
SRS Care 3-74
Air bag warning label 3-77
Air cleaner 7-29
Filter replacement 7-29
Air conditioner compressor label 8-12
Air conditioning system lubricants....8-4
All wheel drive (AWD) 5-20
All wheel drive (AWD/Terrain mode)....5-21
For safe all wheel drive operation 5-23
Reducing the risk of a rollover 5-27
Antenna....4-208
Anti-lock brake system (ABS) 5-44
Appearance care 7-86
Exterior care....7-86
Interior care 7-92
Armed stage 4-11
Audio system 4-208
Antenna 4-208
USB port 4-208
Auto defogging system....4-184
AUTO HOLD 5-40
Auto light 4-132
Automatic climate control system 4-165
Automatic heating and air conditioning 4-166
Manual heating and air conditioning....4-167
Rear climate control....4-173
System operation 4-178
Climate control air filter 4-180
Checking the amount of air conditioner refrigerant and compressor lubricant....4-180
Automatic heating and air conditioning....4-166
Automatic reversal 4-30
Automatic transmission 5-12
Automatic transmission operation 5-12
Good driving practices....5-18

B

Back lamp bulb replacement 7-79
Battery....7-37
For best battery service 7-37
Battery capacity label....7-39

ON ENG Index.qxp 3/18/2019 3:20 PM Page 3

Battery recharging 7-39
Reset items 7-41
Battery saver function 4-130
Before driving 5-5
Blind spot view monitoring system 4-129
Blind-Spot Collision Warning/Blind-Spot Collision-Avoidance Assist system 5-128
System setting and activation 5-129
Warning message and system control 5-131
Limitations of the system 5-137
Bonnet see the hood 4-43
Brake fluid 7-26
Checking the brake/clutch fluid level 7-26
Brake system 5-30
Power brakes 5-30
Parking brake - Foot type 5-32
Electronic parking brake (EPB) 5-34
AUTO HOLD 5-40
Anti-lock brake system (ABS) 5-44
Electronic stability control (ESC) 5-47
Vehicle stability management (VSM) 5-51
Trailer stability assist (TSA) 5-52
Hill-start assist control (HAC) 5-53
Good driving practices 5-54
Bulb replacement 7-72
Bulb replacement precaution 7-72
Bulb wattage 8-5
Button start/stop, see engine start/stop button 5-7

C

Capacities (Lubricants) 8-8
Care
Care of seat belts 3-41
SRS Care 3-74
Tire care 7-42
Exterior care 7-86
Interior care 7-92
Care of seat belts 3-41
Center console storage 4-187
Central door lock switch 4-16
Chains - Tire 5-161
Checking tire inflation pressure 7-42
Child restraint system 3-42
Selecting a Child Restraint System (CRS) 3-43
Installing a Child Restraint System (CRS) 3-45
"ISOFIX anchorage and top-tether anchorage (ISOFIXanchorage system) for children " 3-46
Child-protector rear door lock 4-18
Climate control air filter 7-31
Filter inspection 7-31
Filter replacement 7-31
Closing the tailgate(manaul) 4-25
Closing the tailgate(power) 4-29
Coat hook 4-203
Combined instrument, see instrument cluster 4-68
Compact spare tire 6-24

ON ENG Index.qxp 3/18/2019 3:20 PM Page 4

Coolant 7-23
Cooling fluid, see engine coolant 7-23
Crankcase emission control system 7-95
Cruise control system 5-82
Cruise control switch 5-83
To set cruise control speed.....5-83
To increase cruise control set speed 5-84
To decrease the cruising speed 5-84
To temporarily accelerate with the cruise control on ..5-84
To cancel cruise control 5-85
To resume cruising speed at more than approximately 20mph (30 km/h) 5-85
To turn cruise control off 5-86
Cup holder 4-191
Curtain air bag 3-67

D

Dashboard illumination, see instrument panel illumination.....4-69
Dashboard, see instrument cluster 4-68
Day/night rearview mirror 4-57
Daytime running light.....4-131
Declaration of conformity 8-13
Defogging (Windshield) 4-181
Defroster (Rear window) 4-149
Defrosting (Windshield) 4-181
Dimensions 8-2
Disarmed stage 4-12
Display illumination, see instrument panel illumination ..4-69
Displays, see instrument cluster 4-68
Door locks.....4-14
From outside the vehicle 4-14
From inside the vehicle 4-15
Central door lock switch 4-16
Child-protector rear door lock 4-18
Drinks holders, see cup holders 4-191
Drive mode integrated contol system (AWD) 5-61
Drive mode integrated contol system (FWD) 5-56
Driver Attention Warning (DAW) system 5-123
System setting and activation 5-123
Resetting the system 5-125
System standby 5-125
System malfunction 5-126
Driver position memory system 3-10
Driver's and passenger's front air bag.....3-61
Driver's seat belt warning 3-31
Driving at night.....5-157
Driving in flooded areas 5-158
Driving in the rain 5-157
Driving off-road 5-158
Dual sunroof 4-48
Sunshade 4-49
Sliding the sunroof(for front seat) 4-50
Tilting the sunroof(for front seat) 4-51
Resetting the sunroof 4-52
Sunroof open warning 4-49

ON ENG Index.qxp 3/18/2019 3:20 PM Page 5

E

Economical operation 5-152
Electrochromic mirror (ECM) 4-58
Electrochromic mirror with HomeLink system 4-59
Electronic Child Safety Lock System 4-18
Electronic parking brake (EPB) 5-34
Electronic power steering 4-53
Electronic stability control (ESC) 5-47
Emergency starting 6-5
  Jump starting 6-5
Emergency tailgate safety release.....4-36
Emergency while driving 6-3
Emission control system.....7-95
  Crankcase emission control system.....7-95
  Evaporative emission control system 7-95
  Exhaust emission control system.....7-96
Engine 8-2
Engine compartment.....2-6
Engine compartment.....7-4
Engine coolant 7-23
  Checking the coolant level.....7-23
  Changing the coolant 7-25
Engine Coolant Temperature Gauge.....4-70
Engine number 8-12
Engine oil 7-21
  Checking the engine oil level 7-21
  Changing the engine oil and filter 7-22
Engine overheats.....6-8
Engine start/stop button 5-7
  Illuminated engine start/stop button 5-7
  Engine start/stop button position 5-7
  Starting the engine 5-10
Engine start/stop button illumination 5-7
Engine start/stop button position 5-7
Engine will not start 6-4
Evaporative emission control system 7-95
Exhaust emission control system 7-96
Explanation of scheduled maintenance items 7-17
  Engine oil and filter 7-17
  Drive belts 7-17
  Fuel filter (for gasoline).....7-17
  Fuel lines, fuel hoses and connections 7-18
  Vapor hose and fuel filler cap 7-18
  Vacuum crankcase ventilation hoses 7-18
  Air cleaner filter.....7-18
  Spark plugs 7-18
  Valve clearance 7-19
  Cooling system 7-19
  Coolant 7-19
  Automatic transmission fluid.....7-19
  Brake hoses and lines.....7-20
  Brake fluid 7-20
  Parking brake 7-20
  Brake discs, pads, calipers and rotors 7-20
  Suspension mounting bolts 7-20

ON ENG Index.qxp 3/18/2019 3:20 PM Page 6

Steering gear box, linkage & boots/lower arm ball joint 7-20
Drive shafts and boots 7-20
Air conditioning refrigerant 7-20
Exterior care 7-86
Exterior overview (Front)....2-2
Exterior overview (Rear) 2-3

F

Flat tire 6-16
Jack and tools....6-16
Removing the spare tire....6-17
Storing the spare tire 6-18
Changing tires 6-18
Compact spare tire 6-24
Floor mat anchor(s) 4-204
Fluid
Brake fluid 7-26
Washer fluid....7-27
Folding the outside rearview mirror....4-65
Forward Collision-Avoidance assist (FCA)-Sensor fusion type (Front radar+Front Camera type) 5-66
System setting and activation 5-66
FCA warning message and system control 5-68
FCA sensor....5-71
System malfunction 5-74
Limitation of the system 5-76
Front fog lamp bulb replacement 7-77
Front fog light....4-135
Front seat adjustment (manual) 3-7
Front seat adjustment (power) 3-8
Fuel filler lid....4-45
Fuel Gauge 4-71
Fuel requirements 1-3
Fuses 7-54
Inner panel fuse replacement 7-55
Engine compartment fuse replacement 7-56
Fuse/relay panel description 7-59

G

Gauges 4-70
Glove box 4-187
Glove box lamp 4-147
Glove box lamp bulb replacement 7-84

H

Hazard warning flasher....6-2
Hazardous driving conditions....5-154
Headlamp / Front turn signal lamp bulb replacement ..7-76
Headlamp / Position lamp / Daytime running lamp / Turn signal lamp bulb replacement 7-77
Headlight (Headlamp) escort function 4-130
Headlight position....4-132

ON ENG Index.qxp 3/18/2019 3:20 PM Page 7

Headrest(front) 3-13
Heated steering wheel.....4-55
High - beam operation 4-133
High Beam Assist 4-136
High mounted stop lamp bulb replacement 7-81
Highway driving.....5-158
Hill-start assist control (HAC) 5-53
Hood 4-43
Horn 4-55
How to reset the power tailgate 4-31
How to use this manual 1-2

I

Immobilizer system 4-6
Indicator Lights.....4-107
Inflation conditions(Air bags) 3-70
Inside rearview mirror 4-57
Installing a Child Restraint System (CRS).....3-45
Instrument cluster 4-68
Gauges 4-70
LCD display.....4-74
LCD Display Modes 4-75
Trip computer.....4-88
Trip modes 4-88
Warning and Indicator lights 4-98
Warning lights 4-98
Indicator Lights 4-107
Instrument panel overview 2-5
Interior care.....7-92
Interior features.....4-190
Cigarette lighter 4-190
Ashtray.....4-190
Cup holder 4-191
Seat warmer 4-193
Seat cooler 4-195
Sunvisor 4-192
Power outlet 4-196
Coat hook.....4-203
Floor mat anchor(s) 4-204
USB charger.....4-198
Luggage net (holder) 4-205
Cargo area cover (5 Door).....4-188
AC inverter 4-199
Wireless smart phone charging system 4-200
Interior light 4-145
Map lamp 4-145
Room lamp.....4-146
Luggage lamp 4-147
Glove box lamp 4-147
Vanity mirror lamp.....4-147
Interior overview 2-4
"ISOFIX anchorage and top-tether anchorage (ISOFIXanchorage system) for children " 3-46

ON ENG Index.qxp 3/18/2019 3:20 PM Page 8

J

Jack and tools 6-16
Jump starting.....6-5

L

Label
Air bag warning label 3-77
Tire sidewall labeling.....7-48
Vehicle certification label 8-11
Tire specification and pressure label 8-12
Lane Following Assist (LFA) system.....5-107
LFA system operation 5-108
Warning message 5-109
Limitation of the system 5-111
Lane Keeping Assist (LKA) System 5-114
LKA system operation 5-116
Warning lights and message.....5-118
Driver's attention 5-120
LKA sytem Function Change 5-121
Lap/Shoulder belt 3-31
LCD display 4-74
LCD Display Modes.....4-75
Leading Vehicle Departure Alert System 5-105
System setting and operating conditions 5-105
License plate lamp bulb replacement 7-80
Light bulb position (Front) 7-74
Light bulb position (Rear) 7-74
Light bulb position (Side).....7-75
Light bulbs 7-72
Bulb replacement precaution 7-72
Light bulb position (Front) 7-74
Light bulb position (Rear) 7-74
Light bulb position (Side) 7-75
Headlamp (Low/High)/Front turn signal lamp bulb replacement (Headlamp Type A) 7-76
Headlamp (Low/High) / Position lamp / Daytime running lamp / Turn signal lamp (LED Type) bulb replacement (Headlamp Type B).....7-77
Front fog lamp (LED type) bulb replacement.....7-77
Position lamp + DRL (LED type) bulb replacement (Headlamp Type A) 7-78
Side repeater lamp bulb replacement.....7-78
Stop and tail lamp bulb replacement (Rear combination lamp Type A) 7-78
Stop and tail lamp (LED type) bulb replacement (Rear combination lamp Type B) 7-79
Back lamp bulb replacement 7-79
Rear turn signal lamp (Bulb Type)/ Fog lamp (LED Type) bulb replacement 7-80
License plate lamp bulb replacement 7-80
High mounted stop lamp bulb replacement 7-81
Map lamp bulb replacement 7-81
Map lamp (LED type) bulb replacement.....7-82
Vanity mirror lamp (LED type) bulb replacement 7-82

ON ENG Index.qxp 3/18/2019 3:20 PM Page 9

Room lamp (Bulb Type) bulb replacement 7-82
Room lamp (LED type) bulb replacement 7-83
Glove box lamp bulb replacement.....7-84
Tailgate lamp (Bulb Type) bulb replacement 7-84
Tailgate lamp (LED type) bulb replacement 7-85
Lighting.....4-130
Battery saver function 4-130
Daytime running light 4-131
Headlight (Headlamp) escort function.....4-130
Position & Tail light.....4-131
Auto light 4-132
Headlight position 4-132
High - beam operation 4-133
High Beam Assist 4-136
Turn signals and lane change signals 4-134
Headlight leveling device 4-136
Front fog light 4-135
Rear fog light 4-135
Lubricants and capacities 8-8
Luggage box 4-189
Luggage lamp 4-147
Luggage net (holder) 4-205
Luggage volume 8-3

M

Maintenance
Engine compartment 7-4
Maintenance services.....7-5
Owner maintenance 7-7
Scheduled maintenance service 7-9
Explanation of scheduled maintenance items 7-17
Tire maintenance 7-48
Maintenance services 7-5
Owner's responsibility.....7-5
Owner maintenance precautions 7-5
Manual climate control system.....4-150
Heating and air conditioning 4-151
Rear climate control.....4-157
System operation 4-162
Climate control air filter 4-164
Checking the amount of air conditioner refrigerant and compressor lubricant 4-164
Map lamp 4-145
Map lamp bulb replacement 7-81
Mirrors 4-57
Inside rearview mirror 4-57
Day/night rearview mirror 4-57
Electrochromic mirror (ECM) 4-58
Electrochromic mirror with HomeLink system.....4-59
Outside rearview mirror.....4-64
Remote control.....4-65
Folding the outside rearview mirror 4-65
Reverse parking aid function.....4-67

ON ENG Index.qxp 3/18/2019 3:20 PM Page 10

N

Non-inflation conditions(Air bags) 3-72

O

Odometer 4-72
Oil (Engine) 7-21
Opening the tailgate(manaul) 4-24
Opening the tailgate(power) 4-28
Outside rearview mirror 4-64
Outside Temperature.....4-72
Overheats 6-8
Owner maintenance 7-7
Owner maintenance schedule 7-7

P

Parking brake 7-28
Checking the parking brake.....7-28
Parking brake - Foot type 5-32
Parking distance warning 4-120
Operation of the parking distance warning 4-120
Type of warning indicator and sound 4-121
Non-operational conditions of parking distance warning 4-122
Self-diagnosis.....4-124
Parking distance warning-reverse.....4-116
Operation of the parking distance warning-reverse..4-116
Non-operational conditions of parking distance warning-reverse 4-117
Parking distance warning-reverse precautions 4-118
Self-diagnosis.....4-119
Position & Tail light 4-131
Position lamp + DRL bulb replacement.....7-78
Power brakes.....5-30
Power outlet 4-196
Power tailgate 4-26
Opening the tailgate.....4-28
Closing the tailgate 4-29
Power tailgate non-opening conditions 4-30
Automatic reversal.....4-30
How to reset the power tailgate.....4-31
Power tailgate opening height user setting 4-32
Power tailgate non-opening conditions 4-30
Power tailgate opening height user setting.....4-32
Power window lock button.....4-40
Precautions 3-38
Pre-tensioner seat belt.....3-35

R

Rear Cross-Traffic Collision Warning (RCCW)/
Rear Cross-Traffic Collision-Avoidance Assist (RCCA)
System 5-141

ON ENG Index.qxp 3/18/2019 3:20 PM Page 11

System setting and activation 5-142
Warning message and system control 5-143
Limitations of the system.....5-148
Rear fog light 4-135
Rear Occupant Alert (ROA) System 4-21
Rear seat 3-17
Forward and backward(2nd row seat) 3-17
Seatback angle (2nd row seat).....3-18
Walk-in seat (2nd row seat).....3-18
Seat back angle(3rd row seat) 3-19
Armrest 3-19
Folding the rear sea 3-20
2nd row seat folding 3-22
Rear seat headrests((2nd,3rd row rear seat) 3-25
"Adjusting the height up and down (2nd row seat and 3rd row center seat)" 3-26
Removal (2nd and 3rd row seat) 3-26
3rd row headrest folding 3-27
Rear turn signal lamp / Fog lamp bulb replacement 7-80
Rear view monitor 4-125
Rear window wiper and washer switch 4-144
Recommended lubricants and capacities 8-8
Recommended SAE viscosity number 8-10
Reducing the risk of a rollover.....5-154
Remote control (outside rear view mirror).....4-65
Remote window closing 4-41
Resetting the sunroof 4-52
Reverse parking aid function 4-67
Risk of burns when parking or stopping vehicle 1-7
Road warning 6-2
Rocking the vehicle 5-155
Roof rack 4-206
Room lamp 4-146
Room lamp bulb replacement.....7-82
Rotation (Tire) 7-44

S

Safe Exit Assist (SEA) System.....4-19
Scheduled maintenance service 7-9
Scheduled maintenanceservice precaution 7-9
Scheduled maintenanceservice precaution 7-9
Seat belt restraint system 3-29
Seat belts.....3-29
Seat belt restraint system 3-29
Driver's seat belt warning 3-31
Lap/Shoulder belt.....3-31
Pre-tensioner seat belt 3-35
Precautions.....3-38
Care of seat belts 3-41
Seat cooler 4-195
Seat warmer 4-193
Seatback hook 3-16
Seatback pocket (front).....3-16
Seats 3-2
Front seat adjustment (manual) 3-7

ON ENG Index.qxp 3/18/2019 3:20 PM Page 12

Front seat adjustment (power) 3-8
Driver position memory system....3-10
Headrest(front)....3-13
Seatback pocket (front) 3-16
Seatback hook 3-16
Selecting a Child Restraint System (CRS) 3-43
Side air bag....3-65
Side repeater lamp bulb replacement 7-78
Sliding the sunroof(for front seat) 4-50
Smart Cruise Control with Stop & Go System 5-87
To adjust the sensitivity of Smart Cruise Control system 5-88
To convert to cruise control mode....5-89
Smart Cruise Contol switch....5-89
Smart Cruise Contol Speed 5-90
Vehicle to vehicle distance setting....5-95
Sensor to detect distance to the vehicle ahead 5-98
Limitations of the system....5-100
Smart key 4-5
Record your key number 4-5
Key operations....4-5
Immobilizer system 4-6
Smart key functions 4-7
Smart key precautions 4-9
Smart tailgate 4-32
How to use the Smart Tailgate....4-33
How to deactivate the Smart Tailgate function using the smart key 4-34
Detecting area 4-35
Smooth cornering 5-156
Snow tires 5-160
Special driving conditions 5-154
Hazardous driving conditions 5-154
Reducing the risk of a rollover 5-154
Rocking the vehicle 5-155
Smooth cornering....5-156
Driving at night 5-157
Driving in the rain 5-157
Driving in flooded areas 5-158
Driving off-road....5-158
Highway driving 5-158
Speedometer 4-70
SRS Care....3-74
SRS components and functions 3-57
Starting difficulties, see engine will not start....6-4
Starting the engine - With a smart key....5-10
Steering wheel....4-53
Electronic power steering 4-53
Tilt and telescopic steering 4-54
Heated steering wheel 4-55
Horn 4-55
Stop and tail lamp bulb replacement 7-79
Storage compartment 4-187
Center console storage....4-187
Glove box....4-187
Sunglass holder 4-188

ON ENG Index.qxp 3/18/2019 3:20 PM Page 13

Luggage box 4-189
Sunglass holder.....4-188
Sunroof open warning 4-49
Sunshade 4-49
Sunvisor 4-192
Surround view monitoring system 4-126
Rear view monitor 4-126

T

Tachometer 4-70
Tailgate 4-24
Opening the tailgate.....4-24
Closing the tailgate 4-25
Tailgate lamp bulb replacement 7-84
Theft-alarm stage 4-12
Armed stage 4-11
Theft-alarm stage 4-12
Disarmed stage.....4-12
Tilt and telescopic steering 4-54
Tilting the sunroof(for front seat).....4-51
Tire chains.....5-161
Tire pressure monitoring system 6-9
Tire replacement 7-46
Tire rotation 7-44
Tire specification and pressure label 8-12
Tires and wheels.....7-42,8-7
Tire care 7-42
Recommended cold tire inflation pressures.....7-42
Checking tire inflation pressure.....7-42
Tire rotation 7-44
Wheel alignment and tire balance 7-45
Tire replacement 7-46
Wheel replacement 7-47
Tire traction 7-48
Tire maintenance 7-48
Tire sidewall labeling 7-48
Low aspect ratio tire 7-52
Towing 6-28
Removable towing hook 6-29
Emergency towing 6-30
Trailer stability assist (TSA).....5-52
Transmission - Automatic transmission 5-12
Transmission shift indicator 4-73
Trip computer 4-88
Trip modes 4-88
Turn signals and lane change signals 4-134

U

USB charger 4-198
USB port.....4-208

V

Vanity mirror lamp 4-147

ON ENG Index.qxp 3/18/2019 3:20 PM Page 14

Vanity mirror lamp bulb replacement....7-82
Vehicle break-in process....1-6
Vehicle certification label....8-11
Vehicle handling instructions....1-6
Vehicle identification number (VIN)....8-11
Vehicle stability management (VSM)....5-51
Vehicle weight glossary....5-165

W

Warning and Indicator lights....4-98
Warning lights....4-98
Warning Messages....4-92
Washer fluid....7-27
  Checking the washer fluid level....7-28
Weight/Volume....8-3
Wheel alignment and tire balance....7-45
Wheel replacement....7-47
Windows....4-37
  Power window lock button....4-40
  Remote window closing....4-41
Windshield defrosting and defogging....4-181
  Manual climate control system....4-181
  Automatic climate control system....4-182
  Defogging logic....4-183
Windshield washers....4-143
Windshield wipers....4-141
Winter driving....5-160
  Snow tires....5-160
  Tire chains....5-161
Wiper blades....7-33
  Blade inspection....7-33
  Blade replacement....7-33
Wipers and washers....4-140
  Windshield wipers....4-141
  Windshield washers....4-143
  Rear window wiper and washer switch....4-144
Wireless smart phone charging system....4-200