OWNER'S MANUAL



KIA

The Power to Surprise

CARENS

Kia, THE COMPANY

Thank you for becoming the owner of a new Kia vehicle.

As a global car manufacturer focused on building high-quality, value for money prices, Kia Motors is dedicated to providing you with a customer service experience that exceeds your expectations.

At all of our Kia dealerships you will be treated with warmth, hospitality and professionalism by people who care based on our **"Family-like Care"** promise.

All information contained in this Owner's Manual was accurate at the time of publication. However, Kia reserves the right to make changes at any time so that our policy of continual product improvement can be carried out.

This manual applies to all trims of this vehicle and includes images, descriptions, and explanations of optional as well as standard equipment. As a result, some material in this manual may not be applicable to your specific Kia vehicle. Some images are shown for illustration only and may show features that differ from those on your vehicle.

Enjoy your vehicle and Kia's "Family-like Care" experience!

Thank you for choosing a Kia vehicle.

This manual will familiarize you with operational, maintenance and safety information about your new vehicle. It is supplemented by a Warranty and Maintenance book that provides important information on all warranties regarding your vehicle. Kia urges you to read these publications carefully and follow the recommendations to help assure an enjoyable and safe operation of your new vehicle.

Kia offers a great variety of options, components and features for its various models. Therefore, some of the equipment described in this manual, along with the various illustrations, may not be applicable to your particular vehicle.

The information and specifications provided in this manual were accurate at the time of printing. Kia reserves the right to discontinue or change specifications or design at any time without notice and without incurring any obligation. If you have questions, Kia recommends to check with an authorized Kia dealer/service partner.

Kia assures you of our continuing interest in your motoring pleasure and satisfaction in your Kia vehicle.

© 2018 Kia MOTORS Corp.

All rights reserved. Reproduction by any means, electronic or mechanical, including photocopying, recording, or by any information storage and retrieval system or translation in whole or part is not permitted without written authorization from Kia MOTORS Corporation.

Printed in Korea

Table of contents

Introduction	1
Your vehicle at a glance	2
Safety features of your vehicle	3
Features of your vehicle	4
Audio system	5
Driving your vehicle	6
What to do in an emergency	7
Maintenance	8
Specifications & Consumer information	9
Appendix	10
Alphabetical index	I

Introduction

1

How to use this manual..... 1-02
Fuel requirements..... 1-03
  Gasoline engine..... 1-03
  Diesel engine..... 1-05
Vehicle break-in process..... 1-06

HOW TO USE THIS MANUAL

We want to help you get the greatest possible driving pleasure from your vehicle. Your Owner's Manual can assist you in many ways. We strongly recommend that you read the entire manual. In order to minimize the chance of death or injury, you must read the WARNING and CAUTION sections in the manual.

Illustrations complement the words in this manual to best explain how to enjoy your vehicle. By reading your manual, you will learn about features, important safety information, and driving tips under various road conditions.

The general layout of the manual is provided in the Table of Contents. Use the index when looking for a specific area or subject; it has an alphabetical listing of all information in your manual.

Chapters: This manual has nine chapters plus an index. Each chapter begins with a brief list of contents so you can tell at a glance if that chapter has the information you want.

You will find various WARNINGS, CAUTIONS, and NOTICES in this manual. These were prepared to enhance your personal safety. You should carefully read and follow ALL procedures and recommendations provided in these WARNINGS, CAUTIONS and NOTICES.

⚠ WARNING

A WARNING indicates a situation in which harm, serious bodily injury or death could result if the warning is ignored.

⚠ CAUTION

A CAUTION indicates a situation in which damage to your vehicle could result if the caution is ignored.

✻ NOTICE

A NOTICE indicates interesting or helpful information is being provided.

FUEL REQUIREMENTS

Gasoline engine

Unleaded

For Europe

For the optimal vehicle performance, we recommend you use unleaded gasoline which has an octane rating of RON (Research Octane Number) 95 / AKI (Antiknock Index) 91 or higher. (Do not use methanol blended fuels.) You may use unleaded gasoline with an octane rating of RON 91-94 / AKI 87-90 but it may result in slight performance reduction of the vehicle.

Except Europe

Your new vehicle is designed to use only unleaded fuel having an Octane Rating of RON (Research Octane Number) 91 / AKI (Antiknock Index) 87 or higher. (Do not use methanol blended fuels.)
Your new vehicle is designed to obtain maximum performance with UNLEADED FUEL, as well as minimize exhaust emissions and spark plug fouling.

⚠ CAUTION

NEVER USE LEADED FUEL. The use of leaded fuel is detrimental to the catalytic converter and will damage the engine control system's oxygen sensor and affect emission control. Never add any fuel system cleaning agents to the fuel tank other than what has been specified. (Kia recommends to consult an authorized Kia dealer/service partner for details.)

⚠ WARNING

- **Do not "top off" after the nozzle automatically shuts off when refueling.**
- **Always check that the fuel cap is installed securely to prevent fuel spillage in the event of an accident.**

Leaded (if equipped)

For some countries, your vehicle is designed to use leaded gasoline. When you are going to use leaded gasoline, Kia recommends to visit an authorized Kia dealer/service partner and ask whether leaded gasoline in your vehicle is available or not.
Octane Rating of leaded gasoline is same with unleaded one.

Gasoline containing alcohol and methanol

Gasohol, a mixture of gasoline and ethanol (also known as grain alcohol), and gasoline or gasohol containing methanol (also known as wood alcohol) are being marketed along with or instead of leaded or unleaded gasoline.
Do not use gasohol containing more than 10% ethanol, and do not use gasoline or gasohol containing any methanol. Either of these fuels may cause drivability problems and damage to the fuel system, engine control system and emission control system.
Discontinue using gasohol of any kind if drivability problems occur.
Vehicle damage or driveability problems may not be covered by the manufacturer's warranty if they result from the use of:

1. Gasohol containing more than 10% ethanol.
2. Gasoline or gasohol containing methanol.
3. Leaded fuel or leaded gasohol.

⚠ CAUTION

Never use gasohol which contains methanol. Discontinue use of any gasohol product which impairs drivability.

Other fuels

Using fuels such as;
- Silicone (Si) contained fuel,
- MMT (Manganese, Mn) contained fuel,
- Ferrocene (Fe) contained fuel, and
- Other metallic additives contained fuels,

may cause vehicle and engine damage or cause plugging, misfiring, poor acceleration, engine stalling, catalyst melting, abnormal corrosion, life cycle reduction, etc.
Also, the Malfunction Indicator Lamp (MIL) may illuminate.

✻ NOTICE

Damage to the fuel system or performance problem caused by the use of these fuels may not be covered by your New Vehicle Limited Warranty.

Use of MTBE

Kia recommends avoiding fuels containing MTBE (Methyl Tertiary Butyl Ether) over 15.0% vol. (Oxygen Content 2.7% weight) in your vehicle.
Fuel containing MTBE over 15.0% vol. (Oxygen Content 2.7% weight) may reduce vehicle performance and produce vapor lock or hard starting.

⚠ CAUTION

Your New Vehicle Limited Warranty may not cover damage to the fuel system and any performance problems that are caused by the use of fuels containing methanol or fuels containing MTBE (Methyl Tertiary Butyl Ether) over 15.0% vol. (Oxygen Content 2.7% weight.)

Do not use methanol

Fuels containing methanol (wood alcohol) should not be used in your vehicle. This type of fuel can reduce vehicle performance and damage components of the fuel system, engine control system and emission control system.

Fuel additives

Kia recommends that you use unleaded gasoline which has an octane rating of RON (Research Octane Number) 95 / AKI (Antiknock Index) 91 or higher (for Europe) or Octane Rating of RON (Research Octane Number) 91 / AKI (Antiknock Index) 87 or higher (except Europe).
For customers who do not use good quality gasolines including fuel additives regularly, and have problems starting or the engine does not run smoothly, one bottle of additives added to the fuel tank at every 15,000 km (for Europe)/10,000 km (except Europe). Additives are available from a professional workshop along with information on how to use them. Kia recommends to visit an authorized Kia dealer/service partner. Do not mix other additives.

Operation in foreign countries

If you are going to drive your vehicle in another country, be sure to:

- Observe all regulations regarding registration and insurance.
- Determine that acceptable fuel is available.

Diesel engine

Diesel fuel

Diesel engine must be operated only on commercially available diesel fuel that complies with EN 590 or comparable standard. (EN stands for "European Norm"). Do not use marine diesel fuel, heating oils, or non-approved fuel additives, as this will increase wear and cause damage to the engine and fuel system. The use of non-approved fuels and / or fuel additives will result in a limitation of your warranty rights.
Diesel fuel of above cetane 51 is used in your vehicle. If two types of diesel fuel are available, use summer or winter fuel properly according to the following temperature conditions.

- Above -5°C (23°F) ... Summer type diesel fuel.
- Below -5°C (23°F) ... Winter type diesel fuel.

Watch the fuel level in the tank very carefully : If the engine stops through fuel failure, the circuits must be completely purged to permit restarting.

⚠ CAUTION

Do not let any gasoline or water enter the tank. This would make it necessary to drain it out and to bleed the lines to avoid jamming the injection pump and damaging the engine.

⚠ CAUTION

■ Diesel Fuel (if equipped with DPF)

It is recommended to use the regulated automotive diesel fuel for diesel vehicle equipped with the DPF system.
If you use diesel fuel including high sulfur (more than 50 ppm sulfur) and unspecified additives, it can cause the DPF system to be damaged and white smoke can be emitted.

Biodiesel

Commercially supplied Diesel blends of no more than 7% biodiesel, commonly known as "B7 Diesel" may be used in your vehicle if Biodiesel meets EN 14214 or equivalent specifications. (EN stands for "European Norm"). The use of biofuels exceeding 7% made from rapeseed methyl ester (RME), fatty acid methyl ester (FAME), vegetable oil methyl ester (VME) etc. or mixing diesel exceeding 7% with biodiesel will cause increased wear or damage to the engine and fuel system. Repair or replacement of worn or damaged components due to the use of non approved fuels will not be covered by the manufactures warranty.

⚠ CAUTION

- **Never use any fuel, whether diesel, B7 biodiesel or otherwise, that fails to meet the latest petroleum industry specification.**
- **Never use any fuel additives or treatments that are not recommended or approved by the vehicle manufacturer.**

VEHICLE BREAK-IN PROCESS

No special break-in period is needed. By following a few simple precautions for the first 1,000 km (600 miles) you may add to the performance, economy and life of your vehicle.

- Do not race the engine.
- While driving, keep your engine speed (rpm, or revolutions per minute) between 2,000 rpm and 4,000 rpm.
- Do not maintain a single speed for long periods of time, either fast or slow. Varying engine speed is needed to properly break-in the engine.
- Avoid hard stops, except in emergencies, to allow the brakes to seat properly.
- Don't tow a trailer during the first 2,000 km (1,200 miles) of operation.

Your vehicle at a glance

Exterior overview..... 2-02
Interior overview..... 2-04
Instrument panel overview..... 2-05
Engine compartment..... 2-06

EXTERIOR OVERVIEW

■ Front view

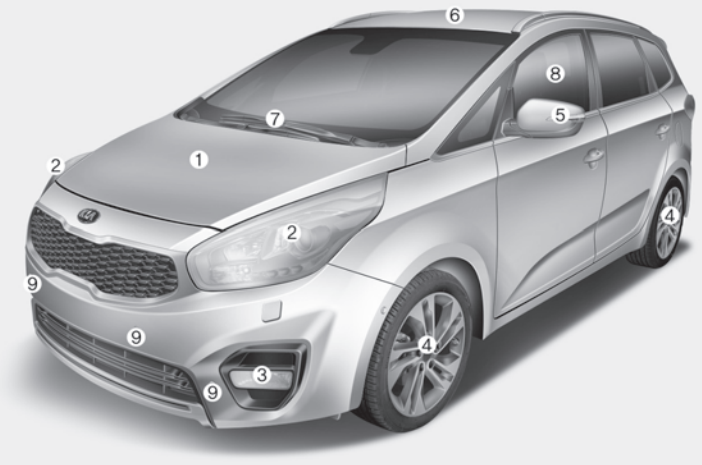

❈ The actual shape may differ from the illustration.

ORP016001L

1. Hood..... p. 4-30
2. Headlamp (Features of your vehicle)..... p. 8-97
   Headlamp (Maintenance)..... p. 8-91
3. Front fog lamp (Features of your vehicle)..... p. 4-105
   Front fog lamp (Maintenance)..... p. 8-93
4. Wheel and tire (Maintenance)..... p. 8-56
   Wheel and tire (Specifications)..... p. 9-09
5. Outside rearview mirror..... p. 4-44
6. Panorama sunroof..... p. 4-35
7. Front windshield wiper blades (Features of your vehicle)..... p. 4-108
   Front windshield wiper blades (Maintenance)..... p. 8-48
8. Windows..... p. 4-24
9. Parking assist system..... p. 4-84

■ Rear view



❈ The actual shape may differ from the illustration.

ORP016002L

1. Door locks ..... p. 4-16
2. Fuel filler lid ..... p. 4-32
3. Rear combination lamp (Features of your vehicle) ..... p. 4-102
   Rear combination lamp (Maintenance) ..... p. 8-101
4. High mounted stop lamp ..... p. 8-103
5. Rear window wiper blade (Features of your vehicle) ..... p. 4-113
   Rear window wiper blade (Maintenance) ..... p. 8-51
6. Tailgate ..... p. 4-22
7. Antenna ..... p. 5-02
8. Rearview camera ..... p. 4-100
9. Parking assist system (Rear) ..... p. 4-84
   Parking assist system (Front) ..... p. 4-84

INTERIOR OVERVIEW

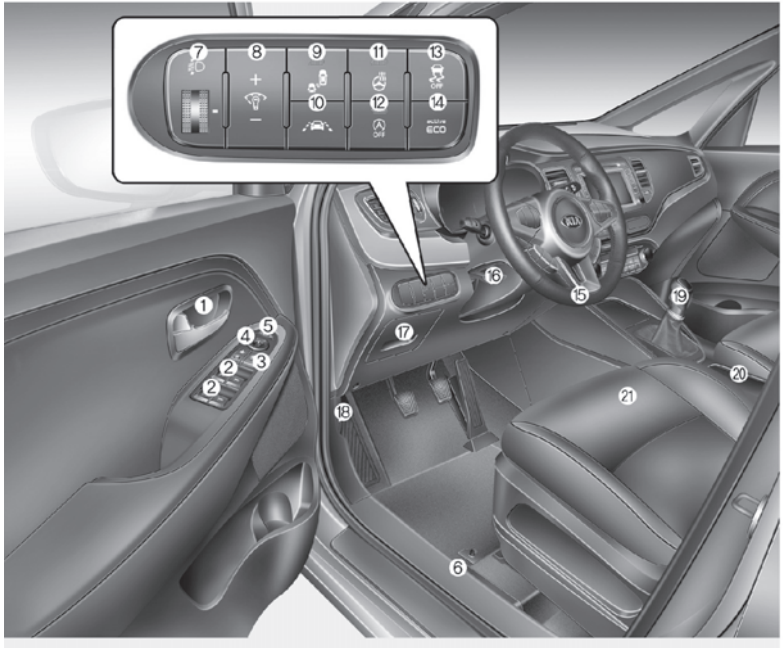

* The actual shape may differ from the illustration.

ORP016003L

1. Inside door handle ..... p. 4-17
2. Power window switch ..... p. 4-25
3. Power window lock button ..... p. 4-28
4. Outside rearview mirror control ..... p. 4-44
5. Outside rearview mirror folding ..... p. 4-44
6. Fuel filler lid open lever ..... p. 4-32
7. Headlight leveling device ..... p. 4-106
8. Instrument panel illumination control ..... p. 4-47
9. BSD On/Off button ..... p. 6-71
10. LDWS On/Off button ..... p. 6-67
11. Steering wheel heater On/Off button ..... p. 4-41
12. Idle Stop and Go (ISG) OFF button ..... p. 6-16
13. ESC OFF button ..... p. 6-49
14. Active ECO button ..... p. 6-39
15. Steering wheel ..... p. 4-39
16. Tilt and telescopic steering control lever ..... p. 4-40
17. Inner panel fuse panel ..... p. 8-72
18. Hood release lever ..... p. 4-30
19. Transaxle shift lever (M/T) ..... p. 6-20
    Transaxle shift lever (A/T) ..... p. 6-24
    Transaxle shift lever (DCT) ..... p. 6-31
20. Cup holder ..... p. 4-148
21. Seat ..... p. 3-02

INSTRUMENT PANEL OVERVIEW



❈ The actual shape may differ from the illustration.

ORP016004L

1. Audio remote control buttons ..... p. 5-02
2. Driver's front air bag ..... p. 3-58
3. Horn ..... p. 4-41
4. Cruise control ..... p. 6-56
   Speed limit control ..... p. 6-60
5. Instrument cluster ..... p. 4-47
6. Lighting control lever ..... p. 4-101
7. Wiper and washer control lever ..... p. 4-108
8. Ignition switch ..... p. 6-06
   Engine Start/Stop button ..... p. 6-10
9. Audio ..... p. 5-02
10. Central door lock switch ..... p. 4-18
11. Hazard warning flasher ..... p. 7-02
12. Manual climate control system ..... p. 4-124
    Automatic climate control system ..... p. 4-130
13. Front seat warmer ..... p. 4-150
    Seat cooler ..... p. 4-151
14. Parking assist system On/Off button ..... p. 4-84
15. Power outlet ..... p. 4-154
16. Center console storage box ..... p. 4-144
17. Glove box ..... p. 4-144
18. Passenger's front air bag ..... p. 3-58

ENGINE COMPARTMENT

■ Gasoline engine 1.6 L- GDI

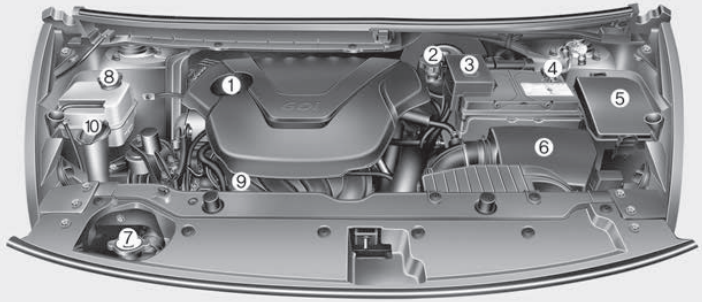

❈ The actual engine room in the vehicle may differ from the illustration. ORP076001L

1. Engine oil filler cap..... p. 8-35
2. Brake/clutch fluid reservoir..... p. 8-42
3. Positive battery terminal..... p. 8-52
4. Negative battery terminal..... p. 8-52
5. Fuse box..... p. 8-66
6. Air cleaner..... p. 8-46
7. Radiator cap..... p. 8-40
8. Engine coolant reservoir..... p. 8-39
9. Engine oil dipstick..... p. 8-35
10. Windshield washer fluid reservoir..... p. 8-43

■ Gasoline engine 2.0 L - GDI

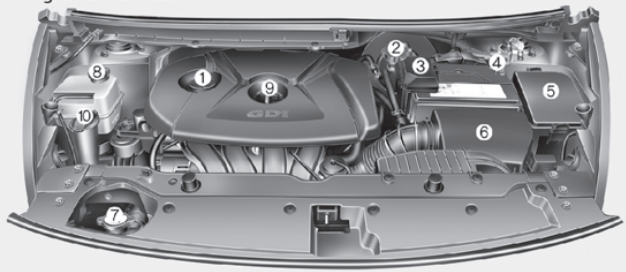

■ Gasoline engine 2.0 L - MPI

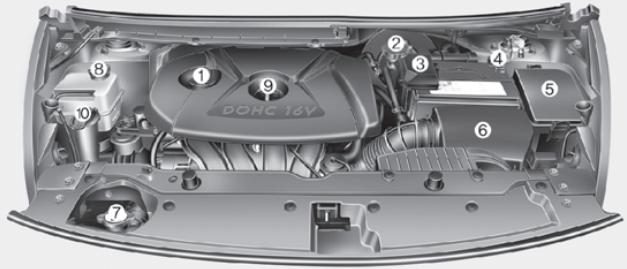

✻The actual engine room in the vehicle may differ from the illustration.

ORP076002L/ORP076003L

1. Engine oil filler cap..... p. 8-35
2. Brake/clutch fluid reservoir..... p. 8-42
3. Positive battery terminal..... p. 8-52
4. Negative battery terminal..... p. 8-52
5. Fuse box..... p. 8-66
6. Air cleaner..... p. 8-46
7. Radiator cap..... p. 8-40
8. Engine coolant reservoir..... p. 8-39
9. Engine oil dipstick..... p. 8-35
10. Windshield washer fluid reservoir..... p. 8-43

■ Diesel engine -1.7L

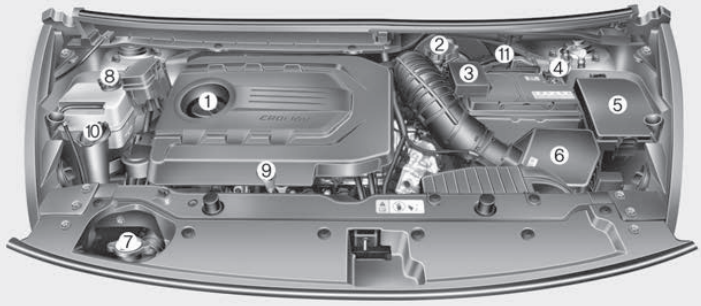

❉ The actual engine room in the vehicle may differ from the illustration.

ORP076083L

1. Engine oil filler cap..... p. 8-35
2. Brake/clutch fluid reservoir..... p. 8-42
3. Positive battery terminal..... p. 8-52
4. Negative battery terminal..... p. 8-52
5. Fuse box..... p. 8-66
6. Air cleaner..... p. 8-46
7. Radiator cap..... p. 8-40
8. Engine coolant reservoir..... p. 8-39
9. Engine oil dipstick..... p. 8-35
10. Windshield washer fluid reservoir..... p. 8-43
11. Fuel filter..... p. 8-45

Safety features of your vehicle

Seats....3-02
Front seat adjustment - manual....3-05
Front seat adjustment - power....3-07
Headrest (for front seat)....3-09
Seatback pocket....3-12
Rear seat adjustment....3-12
Armrest....3-18
Headrest (for rear seat)....3-18
Seat belts....3-21
Seat belt restraint system....3-21
Pre-tensioner seat belt....3-28
Seat belt precautions....3-31
Care of seat belts....3-33
Child restraint system....3-35
Using a child restraint system....3-37
Air bag - supplemental restraint system....3-50
How does the air bag system operate....3-51
Air bag warning and indicator....3-54
SRS components and functions....3-55
Driver's and passenger's front air bag....3-58
Side air bag....3-63
Curtain air bag....3-65
Why didn't my air bag go off in a collision?....3-67
SRS care....3-71
Additional safety precautions....3-72
Adding equipment to or modifying your air bag-equipped vehicle....3-73
Air bag warning label....3-73

SEATS

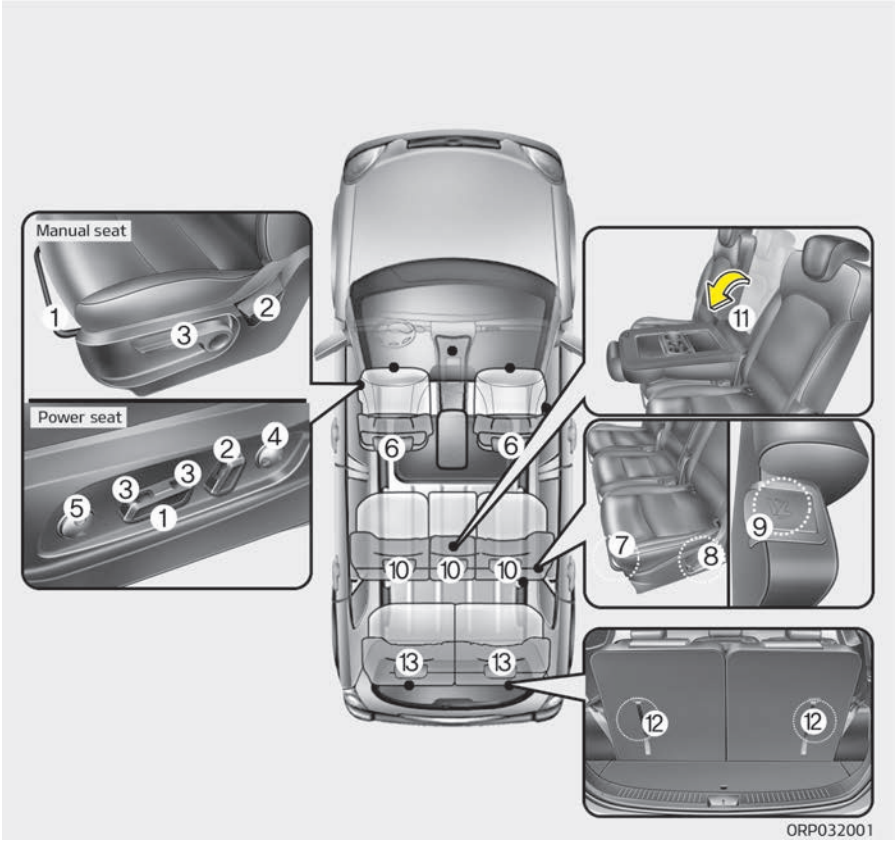

Front seat

1. Forward and backward
2. Seatback angle
3. Seat cushion height (Driver's seat)
4. Lumbar support (Driver's seat)*
5. Seat cushion extension*
6. Headrest

2nd row seat

7. Forward and backward
8. Seatback angle and folding
9. Walk-in seat lever*
10. Headrest
11. Center seat folding (Armrest)*

3rd row seat *

12. Seatback folding
13. Headrest

⚠ WARNING

■ Loose objects
(Continued)

*: if equipped

(Continued)

Loose objects in the driver's foot area could interfere with the operation of the foot pedals, possibly causing an accident. Do not place anything under the front seats.

⚠ WARNING

■ Driver responsibility for front seat passenger



Riding in a vehicle with a front seatback reclined could lead to serious or fatal injury in an accident. If a front

(Continued)

(Continued)

seat is reclined during an accident, the occupant's hips may slide under the lap portion of the seat belt applying great force to the unprotected abdomen. Serious or fatal internal injuries could result. The driver must advise the front passenger to keep the seatback in an upright position whenever the vehicle is in motion.

⚠ WARNING

Do not use a sitting cushion that reduces friction between the seat and passenger. The passenger's hips may slide under the lap portion of the seat belt during an accident or a sudden stop. Serious or fatal internal injuries could result because the seat belt can't operate normally.

⚠ WARNING

■ Driver's seat

(Continued)

(Continued)

- Never attempt to adjust seat while the vehicle is moving. This could result in loss of control, and an accident causing death, serious injury, or property damage.
- Do not allow anything to interfere with the normal position of the seatback. Storing items against a seatback or in any other way interfering with proper locking of a seatback could result in serious or fatal injury in a sudden stop or collision.
- Always drive and ride with your seatback upright and the lap portion of the seat belt snug and low across the hips. This is the best position to protect you in case of an accident.
- In order to avoid unnecessary and perhaps severe air bag injuries, always sit as far back as possible from the steering wheel while maintaining comfortable control of the vehicle. It is recommended that your chest is at least 250 mm (10 inches) away from the steering wheel.

⚠ WARNING

■ Rear seatbacks

- **The rear seatback must be securely latched. If not, passengers and objects could be thrown forward resulting in serious injury or death in the event of a sudden stop or collision.**
- **Luggage and other cargo should be laid flat in the cargo area. If objects are large, heavy, or must be piled, they must be secured. Under no circumstances should cargo be piled higher than the seatbacks. Failure to follow these warnings could result in serious injury or death in the event of a sudden stop, collision or rollover.**
- **No passenger should ride in the cargo area or sit or lie on folded seatbacks while the vehicle is moving. All passengers must be properly seated in seats and restrained properly while riding.**
- **When resetting the seatback to the upright position, make sure it is securely latched by pushing it forward and backwards.**

⚠ WARNING

After adjusting the seat, always check that it is securely locked into place by attempting to move the seat forward or backward without using the lock release lever. Sudden or unexpected movement of the driver's seat could cause you to lose control of the vehicle resulting in an accident.

⚠ WARNING

- **Use extreme caution so that hands or other objects are not caught in the seat mechanisms while the seat is moving.**
- **Do not put a cigarette lighter on the floor or seat. When you operate the seat, gas may gush out of the lighter and cause fire.**
- **If there are occupants in the rear seats, be careful while adjusting the front seat position.**

(Continued)

(Continued)

- **Use extreme caution when picking small objects trapped under the seats or between the seat and the center console. Your hands might be cut or injured by the sharp edges of the seats mechanism.**

⚠ CAUTION

– Precautions with seat covers

- **Use caution when working on the seat cover. A short circuitor disconnection may occur, which could lead to noise, damage the ventilation system, and possible fire.**
- **Be aware of wires or air vents when placing a seat cover or covering the seat with plastic cover. A short circuit may occur, which could lead to fire.**

Feature of Seat Leather

- Leather is made from the outer skin of an animal, which goes through a special process to be available for use. Since it is a natural substance, each part differs in thickness or density.
  Wrinkles may appear as a natural result of stretching and shrinking depending on the temperature and humidity.
- The seat is made of stretchable fabric to improve comfort.
- The parts contacting the body are curved and the side supporting area is high which provides driving comfort and stability.
- Wrinkles may appear naturally from usage. It is not a fault of the product.

⚠ CAUTION

- **Wrinkles or abrasions which appear naturally from usage are not covered by warranty.**

(Continued)

(Continued)

- **Belts with metallic accessories, zippers or keys inside the back pocket may damage the seat fabric.**
- **Make sure not to wet the seat. It may change the nature of natural leather.**
- **Jeans or clothes which could bleach may contaminate the surface of the seat covering fabric.**

Front seat adjustment - manual

Forward and backward

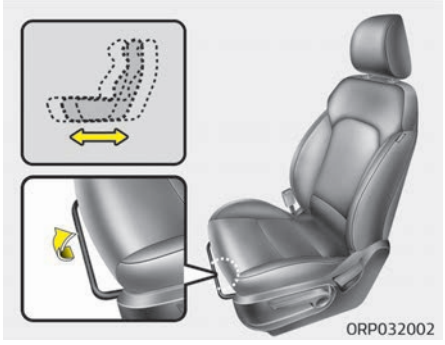

To move the seat forward or backward:

1. Pull the seat slide adjustment lever up and hold it.
2. Slide the seat to the position you desire.
3. Release the lever and make sure the seat is locked in place.

Adjust the seat before driving, and make sure the seat is locked securely by trying to move forward and backward without using the lever. If the seat moves, it is not locked properly.

Seatback angle

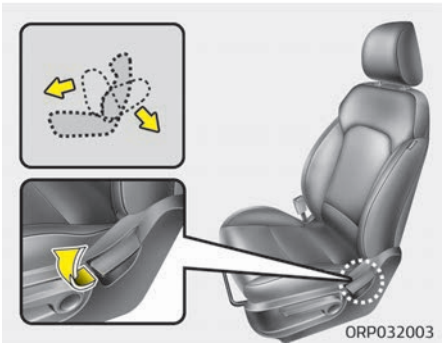

To recline the seatback:

1. Lean forward slightly and lift up the seatback recline lever.
2. Carefully lean back on the seat and adjust the seatback of the seat to the position you desire.
3. Release the lever and make sure the seatback is locked in place. (The lever MUST return to its original position for the seatback to lock.)

Seatback folding (for front passenger's seat, if equipped)

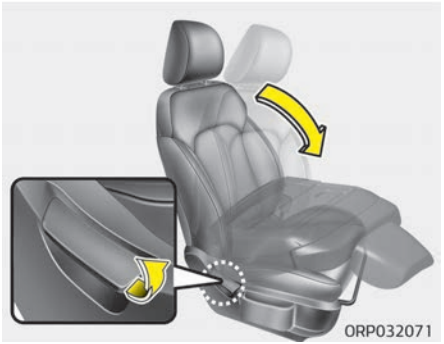

The front passenger's seatbacks can be folded to facilitate carrying long items or to increase the luggage capacity of the vehicle.
To fold the seatback:

1. Lower the front passenger's seat headrests to the lowest position. And slide the seat rearward.
2. Pull on the seatback folding lever (recline lever), then fold the seat toward the front of the vehicle. When you return the seatback to its upright position, always be sure it has locked into position by pushing on the top of the seatback.
3. To use the front passenger's seat, lift and pull the seatback backward by pulling on the folding lever.
   Pull the seatback firmly until it clicks into place. Make sure the seatback is locked in place.

⚠ WARNING



- **Do not fold the front passenger's seat, if the occupants in the 2nd row center and front passenger's side seats. It may cause the injury to occupants by the seat device.**
- **Be careful not to pinch your hands or fingers on the seat device, when you fold or unfold.**

Seat cushion height (if equipped)

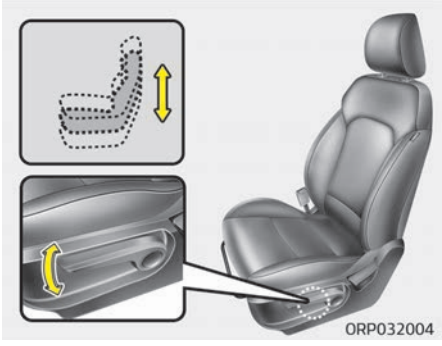

To change the height of the seat cushion, push the lever upwards or downwards.

- To lower the seat cushion, push down the lever several times.
- To raise the seat cushion, pull up the lever several times.

Front seat adjustment - power (if equipped)

The driver's seat can be adjusted by using the control switches located on the outside of the seat cushion. Before driving, adjust the seat to the proper position so as to easily control the steering wheel, pedals and switches on the instrument panel.

⚠ WARNING

The power seat is operable with the ignition OFF.
Therefore, children should never be left unattended in the car.

⚠ CAUTION

- **The power seat is driven by an electric motor. Stop operating once the adjustment is completed. Excessive operation may damage the electrical equipment.**

(Continued)

(Continued)

- **When in operation, the power seat consumes a large amount of electrical power. To prevent unnecessary charging system drain, don't adjust the power seat longer than necessary while the engine is not running.**
- **Do not operate two or more power seat control switches at the same time. Doing so may result in power seat motor or electrical component malfunction.**

Forward and rearward



1. Push the control switch forward or rearward to move the seat to the desired position.
2. Release the switch once the seat reaches the desired position.

Seatback angle

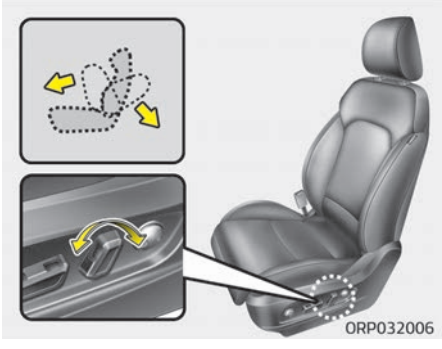

1. Push the control switch forward or rearward to move the seatback to the desired angle.
2. Release the switch once the seat reaches the desired position.

Seat cushion height (if equipped)

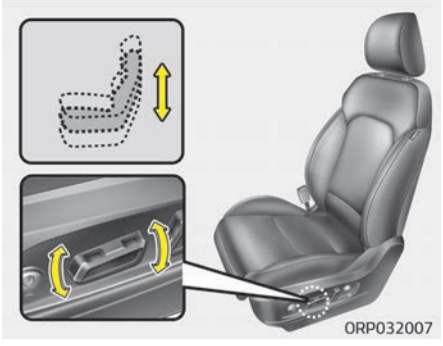

1. Pull the front portion of the control switch up to raise or down to lower the front part of the seat cushion. Pull the rear portion of the control switch up to raise or down to lower the seat cushion.
2. Release the switch once the seat reaches the desired position.

Lumbar support (if equipped)

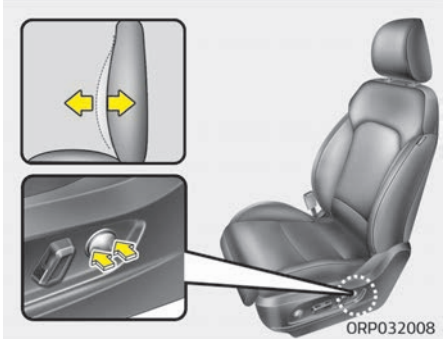

The lumbar support can be adjusted by pressing the lumbar support switch on the side of the seat.

1. Press the front portion of the switch to increase support, or the rear portion of the switch, to decrease support.
2. Release the switch once it reaches the desired position.

Extendable cushion adjustment (for driver's seat, if equipped)

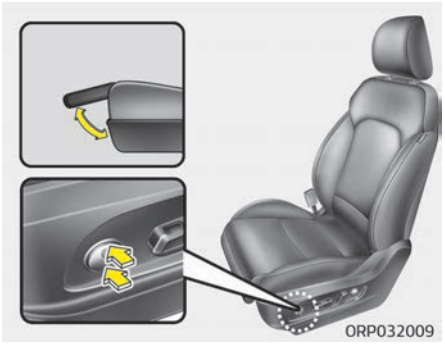

Push the control switch upward or downward to move the seat cushion to the desired position. Release the switch once the seat cushion reaches the desired position.

Headrest (for front seat)

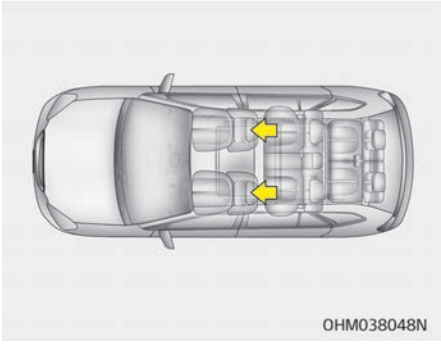

The driver's and front passenger's seats are equipped with a headrest for the occupant's safety and comfort.
The headrest not only provides comfort for the driver and front passenger, but also helps protect the head and neck in the event of a collision.

⚠ WARNING

- **For maximum effectiveness in case of an accident, the headrest should be adjusted so the middle of the headrest is at the same height of the center of gravity of an occupant's head. Generally, the center of gravity of most people's head is similar with the height of the top of their eyes. Also, adjust the headrest as close to your head as possible. For this reason, the use of a cushion that holds the body away from the seatback is not recommended.**
- **Do not operate the vehicle with the headrests removed as severe injury to the occupants may occur in the event of an accident. Headrests may provide protection against neck injuries when properly adjusted.**
- **Do not adjust the headrest position of the driver's seat while the vehicle is in motion.**

Forward and rearward adjustment (if equipped)

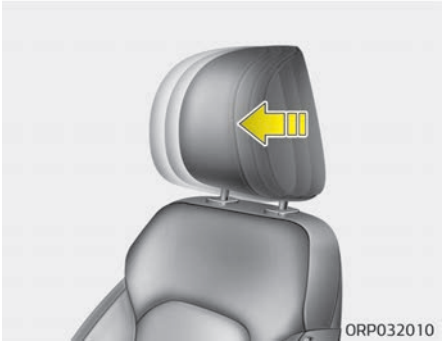

The headrest may be adjusted forward to 4 different positions by pulling the headrest forward to the desired detent. To adjust the headrest to it's furthest rearwards position, pull it fully forward to the farthest position and release it. Adjust the headrest so that it properly supports the head and neck.

Adjusting the height up and down

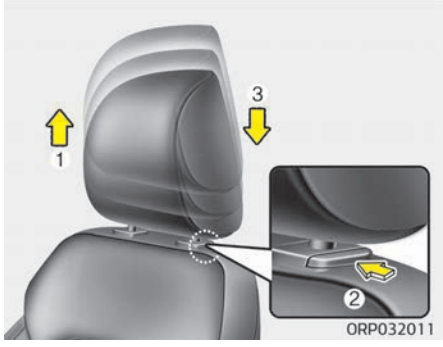

To raise the headrest, pull it up to the desired position (1). To lower the headrest, push and hold the release button (2) on the headrest support and lower the headrest to the desired position (3).

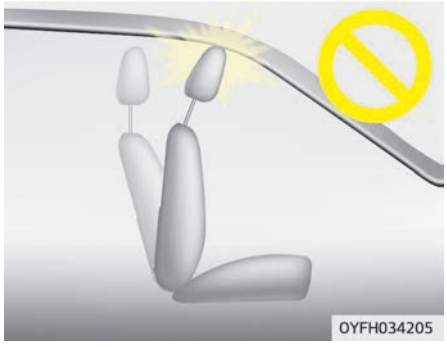

⚠ CAUTION

If you recline the seatback towards the front with the headrest and seat cushion raised, the headrest may come in contact with the sunvisor or other parts of the vehicle.

Removal and installation

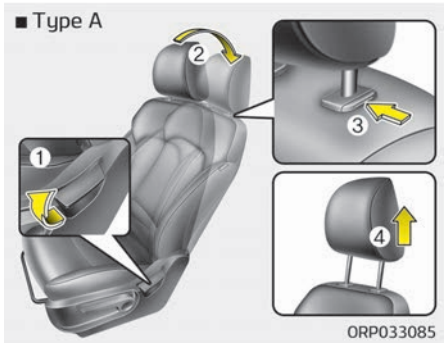

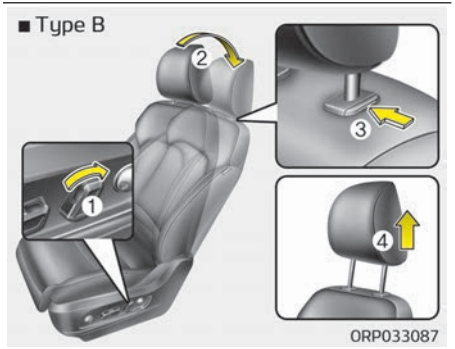

To remove the headrest:

1. Recline the seatback (2) with the recline lever or switch (1).
2. Raise the headrest as far as it can go.
3. Press the headrest release button (3) while pulling the headrest up (4).

⚠ WARNING

NEVER allow anyone to ride in a seat with the headrest removed.

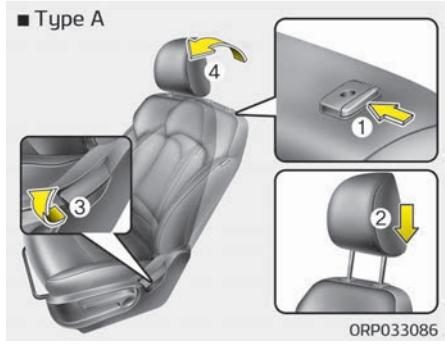

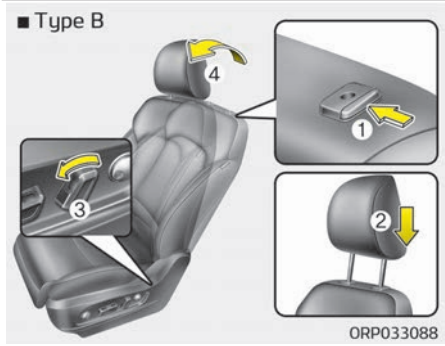

To reinstall the headrest:

1. Put the headrest poles (2) into the holes while pressing the release button (1).

2. Recline the seatback (4) with the recline lever or switch (3).
3. Adjust the headrest to the appropriate height.

⚠ WARNING

Always make sure the headrest locks into position after reinstalling and adjusting it properly.

Seatback pocket

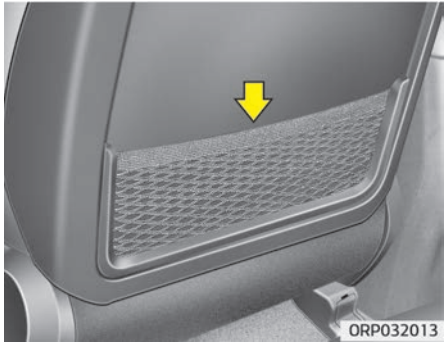

The seatback pocket is provided on the back of the front passenger's and driver's seatbacks.

⚠ WARNING

■ Seatback pockets

Do not put heavy or sharp objects in the seatback pockets. In an accident they could come loose from the pocket and injure vehicle occupants.

Rear seat adjustment

Forward and backward (2nd row seat)

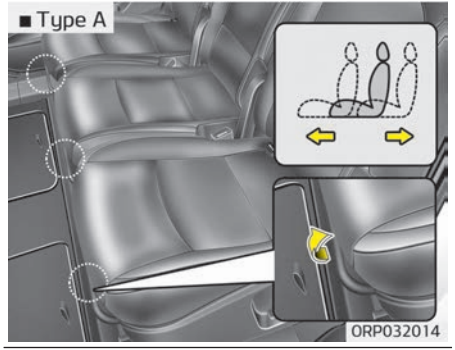

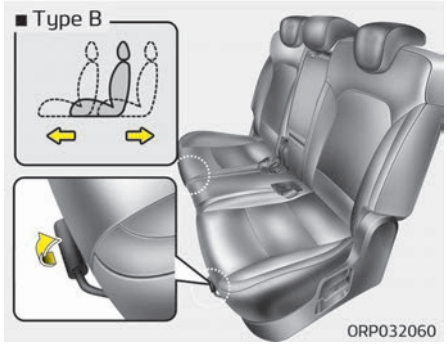

To move the seat forward or backward:

1. Pull the seat slide adjustment lever up and hold it.
2. Slide the seat to the position you desire.
3. Release the lever and make sure the seat is locked in place.

Adjust the seat before driving, and make sure the seat is locked securely by trying to move forward and backward without using the lever. If the seat moves, it is not locked properly.

Seatback angle (2nd row seat)



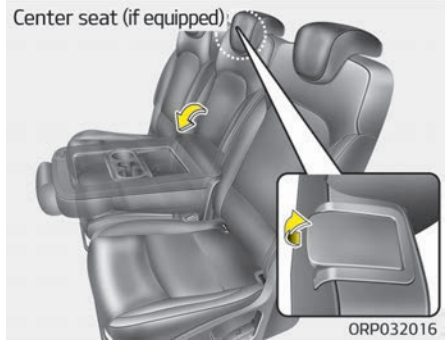

❋ The actual seat shape in the vehicle may differ from the illustration.

To recline the seatback:

1. Pull up the seatback recline lever.
2. Hold the lever and adjust the seatback of the seat to the position you desire.
3. Release the lever and make sure the seatback is locked in place. (The lever MUST return to its original position for the seatback to lock.)

Walk-in seat (2nd row seat, if equipped)

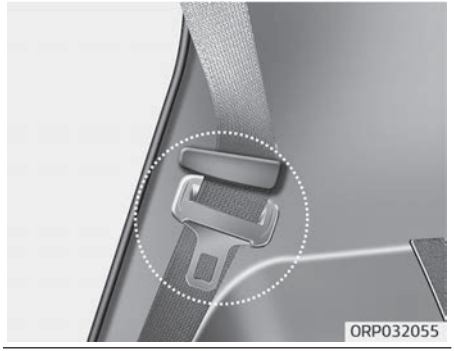

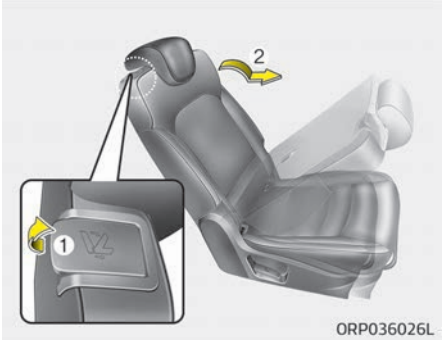

To get in or out of the 3rd row seat:

1. Routing the seat belt webbing through the rear seat belt guide clip. After inserting the seat belt, tighten the belt webbing by pulling it up.
2. Pull up the walk-in lever (1) on the 2nd row seatback.
3. The 2nd row seatback will be folded and push the seat to the farthest forward position (2).
   After getting in or out, slide the 2nd row seat to the farthest rearward position and pull the seatback firmly backward until it clicks into place. Make sure that the seat is locked in place.

⚠ WARNING

Never attempt to adjust while the vehicle is moving or the 2nd row seat is occupied as the seat may suddenly move and cause the passenger on the seat to be injured.

Folding the rear seat

The rear seatbacks can be folded to facilitate carrying long items or to increase the luggage capacity of the vehicle.

⚠ WARNING

The purpose of the fold-down rear seatbacks is to allow you to carry longer objects that could not be accommodated in the cargo area.
Never allow passengers to sit on top of the folded down seatback while the vehicle is moving. This is not a proper seating position and no seat belts are available for use. This could result in serious injury or death in case of an accident or sudden stop.
Objects carried on the folded down seatback should not extend higher than the top of the front seatbacks. This could allow cargo to slide forward and cause injury or damage during sudden stops.

Folding the rear seat

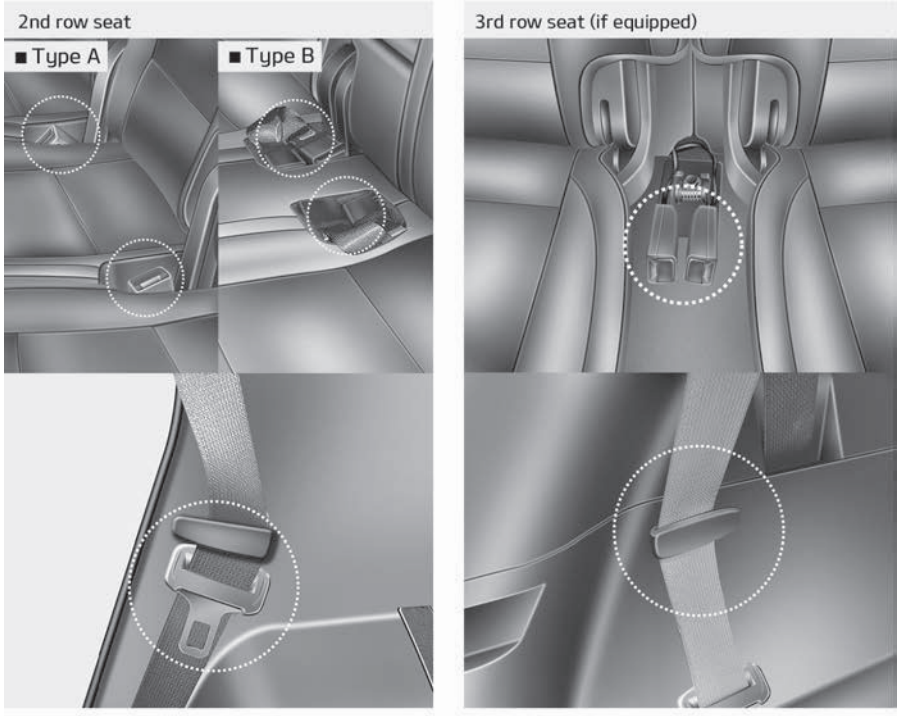

ORP032019/ORP032064/ORP032055/ORP032067/ORP032021

To fold down the rear seatback:

1. Insert the rear seat belt buckle in the pocket between the rear seatback and cushion, and insert the rear seat belt webbing in the guide to prevent the seat belt from being damaged.
2. Set the front seatback to the upright position and if necessary, slide the front seat forward.
3. Lower the rear headrests to the lowest position.

Folding the rear seat

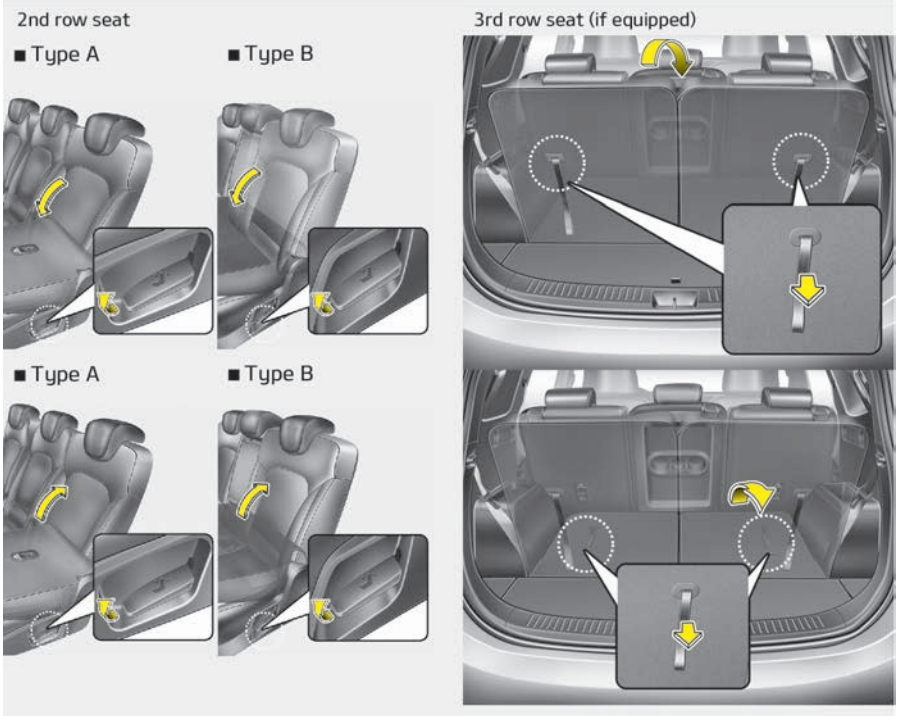

ORP032022/ORP032062/ORP032023/ORP032063/ORP032024/ORP032025

❊ The actual seat shape in the vehicle may differ from the illustration.

4. Pull on the seatback folding lever or strap, then fold the seat toward the front of the vehicle. When you return the seatback to its upright position, always be sure it has locked into position by pushing on the top of the seatback.
5. To use the rear seat, lift and pull the seatback backward by pulling on the folding lever or strap.
   Pull the seatback firmly until it clicks into place.
   Make sure the seatback is locked in place.
6. Return the rear seat belt to the proper position.

To fold down the rear center seatback (for 2nd row seat, if equipped)

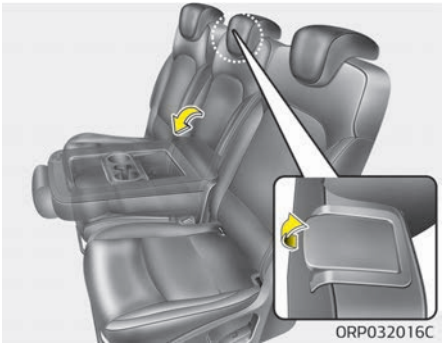

1. Lower the rear headrests to the lowest position.
2. Pull the center seatback folding lever up, then fold the seat toward the front of the vehicle.

When you return the seatback to its upright position, always be sure it has locked into position by pushing on the top of the seatback.

⚠ WARNING

■ 2nd row center seat folding (if equipped)

- **Do not fold the 2nd row center seat, if the occupants in the 3rd row seats, It may cause the injury to occupants by the seat device. If occupants in the 3rd row seats, Fix the upright position of the 2nd row center seat.**
- **If you use the 2nd row center seat back folding function to carry long objects, you should fix the long object to prevent it from being thrown about the vehicle in a collision and causing injury to vehicle occupants.**

⚠ WARNING

■ Uprighting seat

When you return the seatback to its upright position, hold the seatback and return it slowly. If the seatback is returned without holding it, the back of the seat could spring for-

(Continued)

(Continued)

ward resulting in injury caused by being struck by the seatback.

⚠ CAUTION

■ Damaging rear seat belt buckles

When you fold the rear (2nd and/or 3rd row) seatback, insert the buckle in the pocket between the rear seatback and cushion. Doing so can prevent the buckle from being damaged by the rear seatback.

⚠ CAUTION

■ Rear seat belts

When returning the rear (2nd and/or 3rd row) seatbacks to the upright position, remember to return the rear shoulder belts to their proper position. Routing the seat belt webbing through the rear seat belt guides will help keep the belts from being trapped behind or under the seats.

⚠ WARNING

■ Cargo

Cargo should always be secured to prevent it from being thrown about the vehicle in a collision and causing injury to the vehicle occupants. Do not place objects in the rear (2nd and/or 3rd row) seats, since they cannot be properly secured and may hit the front seat occupants in a collision.

⚠ WARNING

■ Cargo loading

Make sure the engine is off, the automatic transaxle/dual clutch transmission is in P (Park) or the manual transaxle is in R (Reverse) or 1st, and the parking brake is securely applied whenever loading or unloading cargo. Failure to take these steps may allow the vehicle to move if the shift lever is inadvertently moved to another position.

Armrest

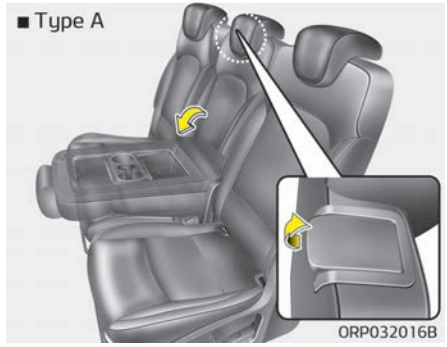

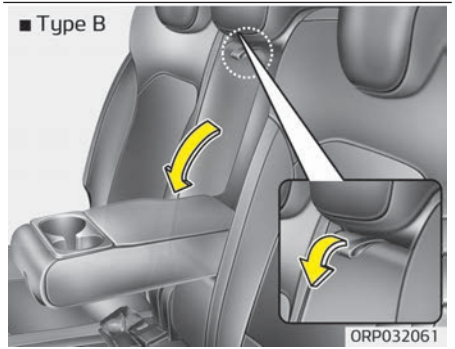

Type A

To use the armrest, fold the center seat back.

Type B

To use the armrest, pull it forward from the seatback.

Headrest (for rear seat)

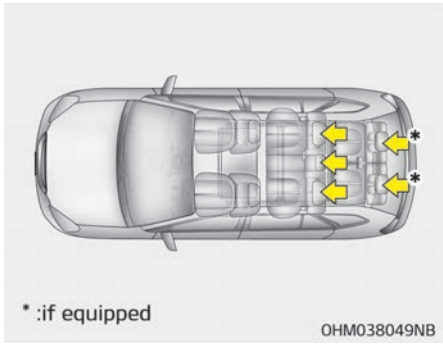

The rear seat(s) is equipped with headrests in all the seating positions for the occupant's safety and comfort. The headrest not only provides comfort for passengers, but also helps protect the head and neck in the event of a collision.

⚠ WARNING



- **For maximum effectiveness in case of an accident, the headrest should be adjusted so the middle of the headrest is at the same height as the center of gravity of an occupant's head. Generally, the center of gravity of most people's head is similar with the height of the top of their eyes. Also adjust the headrest as close to your head as possible. For this reason, the use of a cushion that holds the body away from the seatback is not recommended.**
- **Do not operate the vehicle with the headrests removed. Severe injury to an occupant may occur in the event of an accident. Headrests may provide protection against severe neck injuries when properly adjusted.**

⚠ CAUTION

When there is no occupant in the rear seats, adjust the height of the headrest to the lowest position. The rear seat headrest can reduce the visibility of the rear area.

Adjusting the height up and down

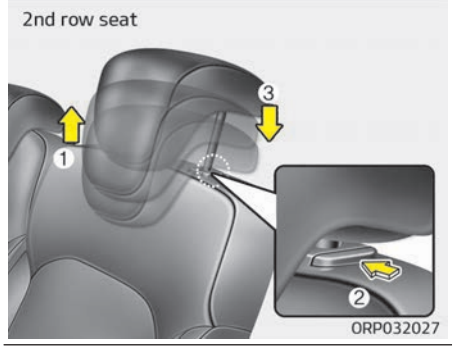

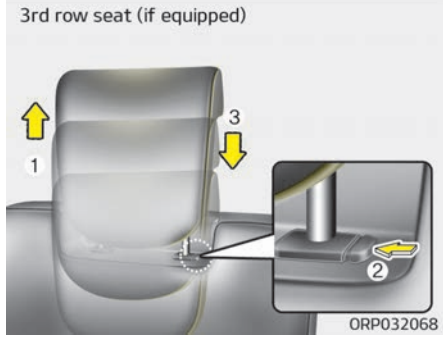

To raise the headrest, pull it up to the desired position (1). To lower the headrest, push and hold the release button (2) on the headrest support and lower the headrest to the desired position (3).

Removal and installation

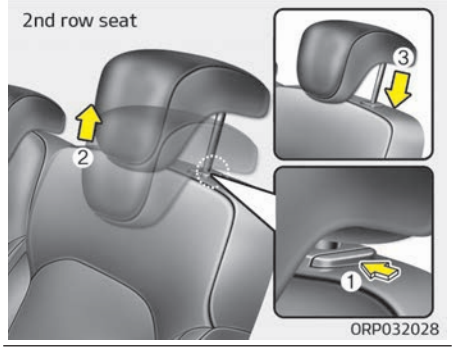

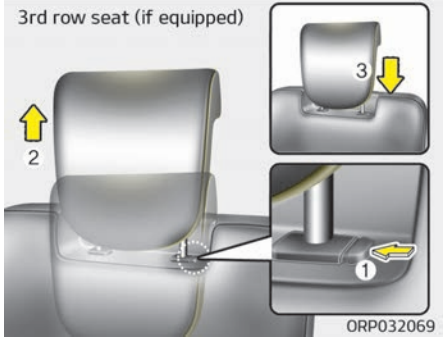

To remove the headrest, raise it as far as it can go then press the release button (1) while pulling the headrest up (2).
To reinstall the headrest, put the headrest poles (3) into the holes while pressing the release button (1). Then adjust it to the appropriate height.

⚠ WARNING

Make sure the headrest locks in position after adjusting it to properly protect the occupants.

SEAT BELTS

Seat belt restraint system

⚠ WARNING

- For maximum restraint system protection, the seat belts must always be used whenever the car is moving.
- Seat belts are most effective when seatbacks are in the upright position.
- Children age 12 and younger must always be properly restrained in the rear seat. Never allow children to ride in the front passenger seat. If a child over 12 must be seated in the front seat, he/she must be properly belted and the seat should be moved as far back as possible.
- Never wear the shoulder belt under your arm or behind your back. An improperly positioned shoulder belt can cause serious injuries in a crash. The shoulder belt should be positioned midway over your shoulder across your collarbone.

(Continued)

(Continued)

- Never wear a seat belt over fragile objects. If there is a sudden stop or impact, the seat belt can damage it.
- Avoid wearing twisted seat belts. A twisted belt can't do its job as well. In a collision, it could even cut into you. Be sure the belt webbing is straight and not twisted.
- Be careful not to damage the belt webbing or hardware. If the belt webbing or hardware is damaged, replace it.

⚠ WARNING

- Seat belts are designed to bear upon the bony structure of the body, and should be worn low across the front of the pelvis or the pelvis, chest and shoulders, as applicable; wearing the lap section of the belt across the abdominal area must be avoided.

(Continued)

(Continued)

- Seat belts should be adjusted as firmly as possible, consistent with comfort, to provide the protection for which they have been designed.
- A slack belt will greatly reduce the protection afforded to the wearer. Care should be taken to avoid contamination of the webbing with polishes, oils and chemicals, and particularly battery acid.
- Cleaning may safely be carried out using mild soap and water. The belt should be replaced if webbing becomes frayed, contaminated or damaged. It is essential to replace the entire assembly after it has been worn in a severe impact even if damage to the assembly is not obvious. Belts should not be worn with straps twisted. Each belt assembly must only be used by one occupant; it is dangerous to put a belt around a child being carried on the occupant's lap.

⚠ WARNING

- **No modifications or additions should be made by the user which will either prevent the seat belt adjusting devices from operating to remove slack, or prevent the seat belt assembly from being adjusted to remove slack.**
- **When you fasten the seat belt, be careful not to latch the seat belt in buckles of other seat. It's very dangerous and you may not be protected by the seat belt properly.**
- **Do not unfasten the seat belt and do not fasten and unfasten the seat belt repeatedly while driving. This could result in loss of control, and an accident causing death, serious injury, or property damage.**
- **When fastening the seat belt, make sure that the seat belt does not pass over objects that are hard or can break easily.**
- **Make sure there is nothing in the buckle. The seat belt may not be fastened securely.**

Seat belt warning

Driver's seat belt warning (1)

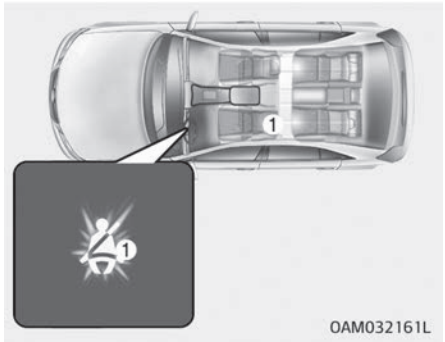

If the driver's seat belt is unfastened after the ignition switch is ON, the seat belt warning light illuminates until the belt is fastened.
If you continue not to fasten the seat belt and you drive over 9 km/h, the illuminated warning light will start to blink until you drive under 6 km/h. (if equipped)
If you continue not to fasten the seat belt and you drive over 20 km/h the seat belt warning chime will sound for approximately 100 seconds and the corresponding warning light will blink. (if equipped)

Front passenger's seat belt warning (2) (if equipped)

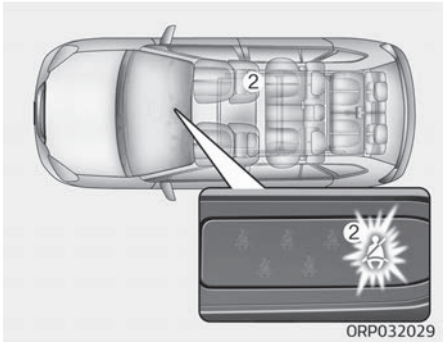

If the front passenger's seat belt is not fastened when the ignition switch is turned ON or if it is disconnected after the ignition switch is turned ON, the corresponding seat belt warning light will illuminate until the belt is fastened.
If you continue not to fasten the seat belt and you drive over 9 km/h, the illuminated warning light will start to blink until you drive under 6 km/h.
If you continue not to fasten the seat belt and you drive over 20 km/h the seat belt warning chime will sound for approximately 100 seconds and the corresponding warning light will blink.

⚠ WARNING

Riding in an improper position adversely affects the front passenger's seat belt warning system. It is important for the driver to instruct the passenger as to the proper seating instructions as contained in this manual.

✻ NOTICE

- You can find the front passenger's seat belt warning light on the center fascia panel.
- Although the front passenger seat is not occupied, the seat belt warning light will blink or illuminate for 6 seconds.
- The front passenger's seat belt warning may operate when luggage is placed on the front passenger seat.

Rear passenger's seat belt warning (3,4,5,6,7) (if equipped)

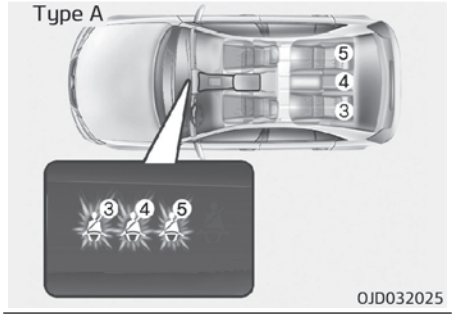

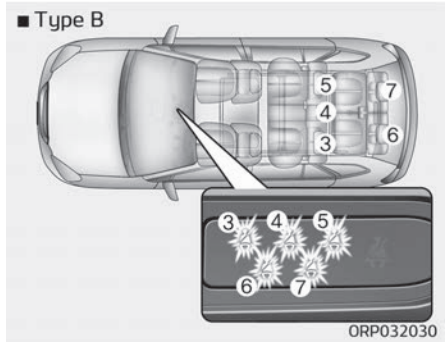

If the ignition switch is turned ON (engine is not running) when the rear passenger's lap/shoulder belt is not fastened, the corresponding seat belt warning light will illuminate until the belt is fastened.
And then, the rear corresponding seat belt warning light will illuminate for approximately 35 seconds, if any of following occurs;

- You start the engine when the rear belt is not fastened.
- You drive over 9 km/h when the rear belt is not fastened.
- The rear belt is disconnected when driving under 20 km/h.

If the rear seat belt is fastened, the warning light will turn off immediately.
If the rear seat belt is disconnected when you drive over the 20 km/h, the corresponding seat belt warning light will blink and warning chime will sound for 35 seconds.
But if the rear passenger's lap/shoulder belt is/are connected and disconnected twice within 9 seconds after the belt is fastened, the corresponding seat belt warning light will not operate.

Lap/shoulder belt

Height adjustment

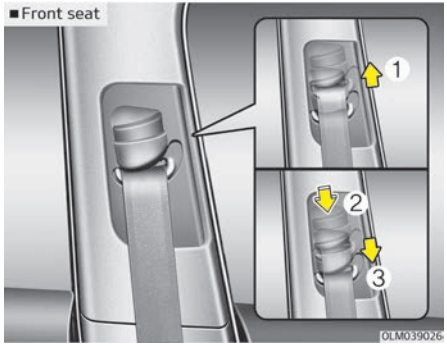

You can adjust the height of the shoulder belt anchor to one of 4 positions for maximum comfort and safety.
The height of the adjusting seat belt should not be too close to your neck. You will not be getting the most effective protection. The shoulder portion should be adjusted so that it lies across your chest and midway over your shoulder near the door and not your neck.
To adjust the height of the seat belt anchor, lower or raise the height adjuster into an appropriate position.

To raise the height adjuster, pull it up (1). To lower it, push it down (3) while pressing the height adjuster button (2). Release the button to lock the anchor into position. Try sliding the height adjuster to make sure that it has locked into position.
Improperly positioned seat belts can cause serious injuries in an accident.

⚠ WARNING

- **Verify the shoulder belt anchor is locked into position at the appropriate height. Never position the shoulder belt across your neck or face.**
- **Failure to replace seat belts after an accident could leave you with damaged seat belts that will not provide protection in the event of another collision leading to personal injury or death. Replace your seat belts after being in an accident as soon as possible.**

To fasten your seat belt:

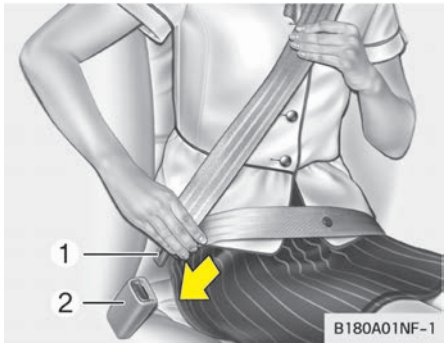

To fasten your seat belt, pull it out of the retractor and insert the metal tab (1) into the buckle (2). There will be an audible "click" when the tab locks into the buckle.
The seat belt automatically adjusts to the proper length only after the lap belt portion is adjusted manually so that it fits snugly around your hips. If you lean forward in a slow, easy motion, the belt will extend and let you move around. If there is a sudden stop or impact, however, the belt will lock into position. It will also lock if you try to lean forward too quickly.

✻ NOTICE

If you are not able to pull out the seat belt from the retractor, firmly pull the belt out and release it. Then you will be able to pull the belt out smoothly.

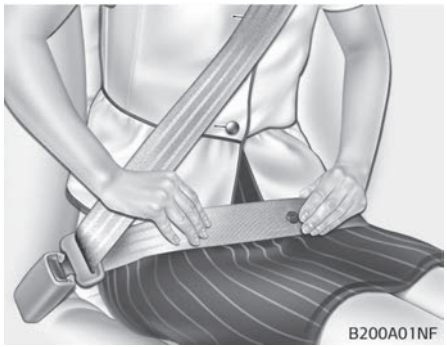

⚠ WARNING

You should place the lap belt portion as low as possible and snugly across your hips, not on your waist. If the lap belt is located too high on your
(Continued)

(Continued)

waist, it may increase the chance of injury in the event of a collision. Both arms should not be under or over the belt. Rather, one should be over and the other under, as shown in the illustration.
Never wear the seat belt under the arm near the door.

To release the seat belt:

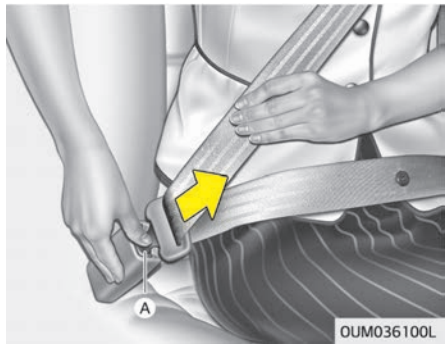

The seat belt is released by pressing the release button (A) in the locking buckle. When it is released, the belt should automatically draw back into the retractor.

If this does not happen, check the belt to be sure it is not twisted, then try again.

Lap belt (if equipped)

To fasten your seat belt:

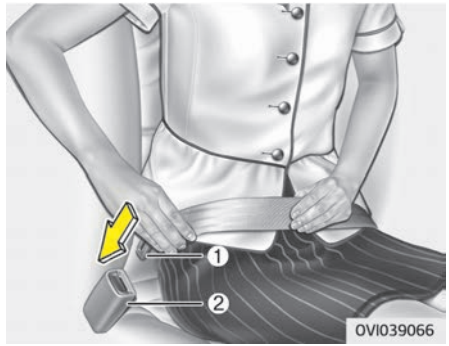

To fasten a 2-point static type belt, insert the metal tab (1) into the locking buckle (2). There will be an audible "click" when the tab locks into the buckle. Check to make sure the belt is properly locked and that the belt is not twisted.

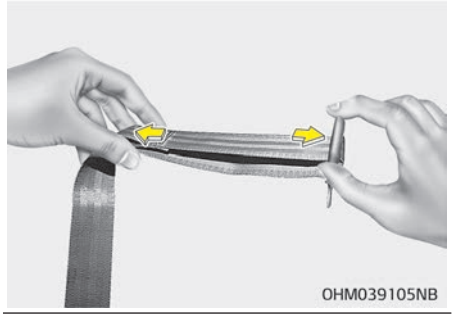

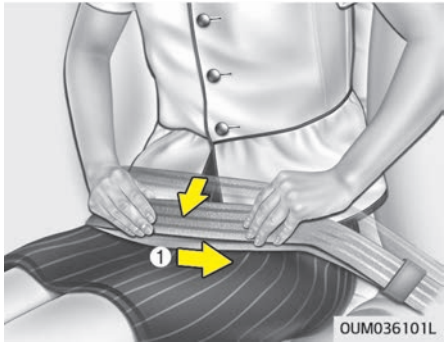

With a 2-point static type seat belt, the length must be adjusted manually so it fits snugly around your body. Fasten the belt and pull on the loose end to tighten. The belt should be placed as low as possible on your hips (1), not on your waist. If the belt is too high, it could increase the possibility of your being injured in an accident.
When using the rear center seat belt, the buckle with the "CENTER" mark must be used.

To release the seat belt:

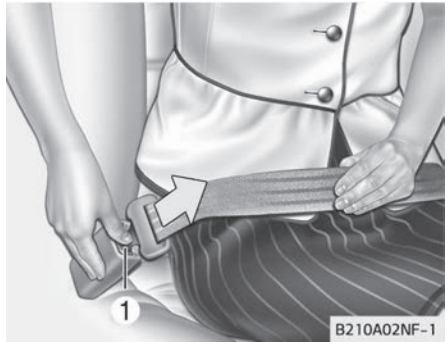

When you want to release the seat belt, press the button (1) in the locking buckle.

⚠ WARNING

The center lap belt latching mechanism is different from those for the rear seat shoulder belts. When fastening the rear seat shoulder belts or the center lap belt, make sure they are inserted into the correct buckles to obtain maximum protection from the seat belt system and assure proper operation.

3 Point rear center belt (if equipped)

To fasten the rear center belt

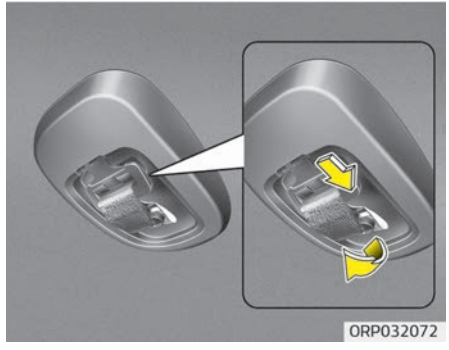

1. Detach the mini tongue from holder and then extract the tongue plate from the hole on the belt assembly cover and slowly pull the tongue plates out from the retractor.

⚠ CAUTION

■ Cargo

Be sure that the cargo is securely loaded in the rear cargo area. Doing not so may damage the rear center safety belt in sudden stop or certain collisions.

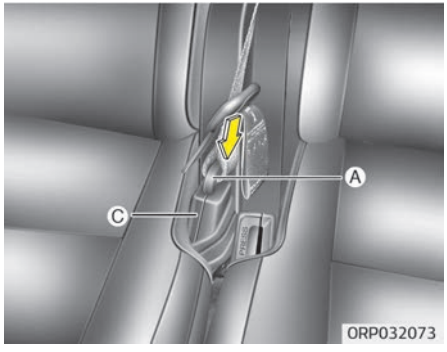

2. Insert the mini tongue (A) into the open end of the mini buckle (C) until an audible “click" is heard, indicating the latch is locked. Make sure the belt is not twisted.

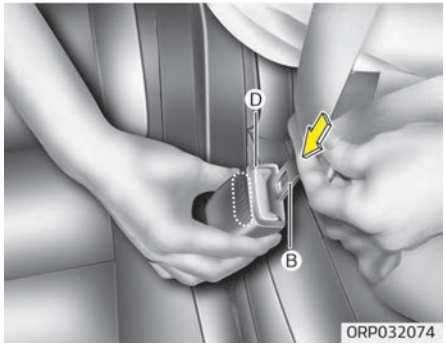

3. Pull the tongue plate (B) and insert the tongue plate (B) into the open end of the buckle (D) until an audible “click” is heard, indicating the latch is locked. Make sure the belt is not twisted.

⚠ CAUTION

When using the rear center seat belt, the buckle with the “CENTER” mark must be used.

There will be an audible “click” when the tab locks in the buckle. The seat belt automatically adjusts to the proper length only after the lap belt is adjusted manually so that it fits snugly around your hips, if you lean forward in a slow, easy motion, the belt will extend and let you move around. If there is a sudden stop or impact, the belt will lock into position. It will also lock if you try to lean forward too quickly.

⚠ WARNING

When using the rear seat center belt, you must lock all tongue plates and buckles. If any tongue plate or buckle is not locked, it will increase the chance of injury in the event of collision.

To unfasten the rear center belt

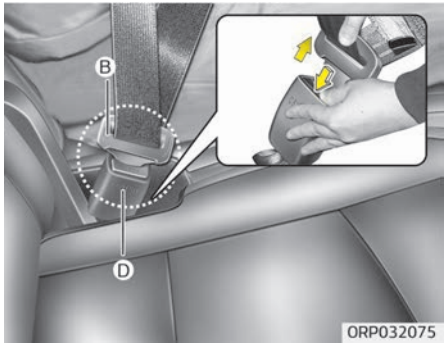

1. Press the release button on the buckle (D) and remove the tongue plate (B) from the buckle (D).

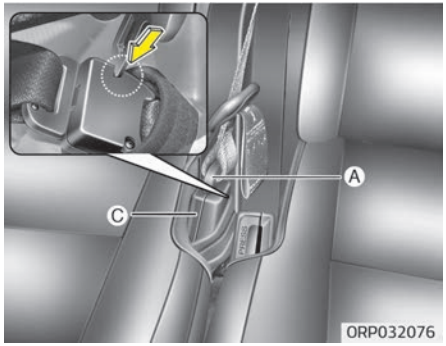

2. To retract the rear center seat belt, insert the tongue plate or key or similar small rigid device into the web release hole (C). Pull up on the seat belt web (A) and allow the webbing to retract automatically.

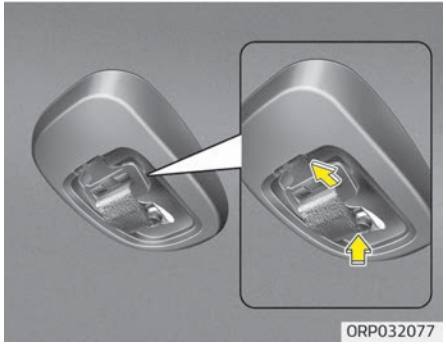

3. Insert the tongue plate into the hole and then attach the mini tongue on the holder.

Pre-tensioner seat belt (if equipped)



Your vehicle is equipped with driver's and front passenger's pre-tensioner seat belts (retractor pretensioner and EFD (Emergency Fastening Device)). The pre-tensioner seat belts can be activated, where the frontal collision is severe enough, together with the air bags.

When the vehicle stops suddenly, or if the occupant tries to lean forward too quickly, the seat belt retractor will lock into position. In certain frontal collisions, the pre-tensioner will activate and pull the seat belt into tighter contact against the occupant's body.

1. Retractor Pretensioner
   The purpose of the retractor pretensioner is to make sure that the shoulder belts fit in tightly against the occupant's upper body in certain frontal collisions.
2. EFD (Emergency Fastening Device)
   The purpose of the EFD is to make sure that the pelvis belts fit in tightly against the occupant's lower body in certain frontal collisions. (if equipped)

If the system senses excessive tension on the driver or passenger's seat belt when the pre-tensioner system activates, the load limiter inside the retractor pre-tensioner will release some of the pressure on the affected seat belt. (if equipped)

✻ NOTICE

The pre-tensioner will activate not only in a frontal collision but also in a side collision, if the vehicle is equipped with a side or curtain air bag.

⚠ WARNING

For your safety, be sure that the belt webbing is not loose or twisted and always sit properly on your seat.

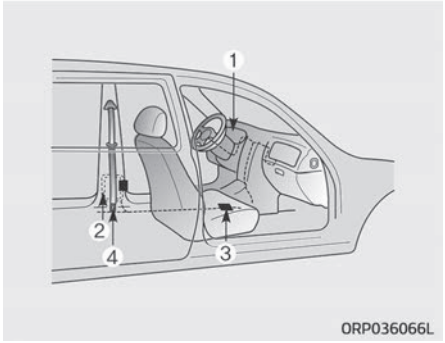

The seat belt pre-tensioner system consists mainly of the following components. Their locations are shown in the illustration:

1. SRS air bag warning light
2. Retractor pre-tensioner assembly
3. SRS control module
4. Emergency fastening device (EFD)*

⚠ WARNING

To obtain maximum benefit from a pre-tensioner seat belt:
(Continued)

(Continued)

1. **The seatbelt must be working correctly and adjusted to the proper position. Please read and follow all of the important information and precautions about your vehicle's occupant safety features – including seat belts and air bags – that are provided in this manual.**
2. **Be sure you and your passengers always wear seat belts properly.**

✻ NOTICE

- When the pre-tensioner seat belts are activated, a loud noise may be heard and fine dust, which may appear to be smoke, may be visible in the passenger compartment. These are normal operating conditions and are not hazardous.

(Continued)

(Continued)

- Although it is harmless, the fine dust may cause skin irritation and should not be breathed for prolonged periods. Wash all exposed skin areas thoroughly after an accident in which the pre-tensioner seat belts were activated.
- Because the sensor that activates the SRS air bag is connected with the pre-tensioner seat belt, the SRS air bag warning light on the instrument panel will illuminate for approximately 6 seconds after the ignition switch has been turned to the "ON" position, and then it should turn off.

⚠ CAUTION

If the pre-tensioner seat belt is not working properly, the SRS air bag warning light will illuminate even if there is no malfunction of the SRS air bag. If the SRS air bag warning light does not illuminate when the ignition key is turned to ON, or if it

(Continued)

(Continued)

remains illuminated after illuminating for approximately 6 seconds, or if it illuminates while the vehicle is being driven, have the system inspected by a professional workshop. Kia recommends to visit an authorized Kia dealer/service partner.

⚠ WARNING

- **Pre-tensioners seat belts systems are designed to operate only one time. After activation, pre-tensioner seat belts must be replaced. All seat belts, of any type, should always be replaced after they have been worn during a collision.**
- **The pre-tensioner seat belt assembly mechanisms become hot during activation. Do not touch the pre-tensioner seat belt assemblies for several minutes after they have been activated.**

(Continued)

*: if equipped

(Continued)

- **Do not attempt to inspect or replace the pre-tensioner seat belts yourself. Have the system inspected by a professional workshop. Kia recommends to visit an authorized Kia dealer/service partner.**
- **Do not attempt to service or repair the pre-tensioner seat belt system in any manner.**
- **Improper handling of the pretensioner seat belt assemblies, and failure to heed the warnings not to strike, modify, inspect, replace, service or repair the pre-tensioner seat belt assemblies may lead to improper operation or inadvertent activation and serious injury.**
- **Always wear the seat belts when driving or riding in a motor vehicle.**
- **If the vehicle or pre-tensioner seat belt must be discarded, contact a professional workshop. Kia recommends to visit an authorized Kia dealer/service partner.**

⚠ CAUTION

Body work on the front area of the vehicle may damage the pretensioner seat belt system. Therefore, have the system serviced by a professional workshop. Kia recommends to visit an authorized Kia dealer/service partner.

Seat belt precautions

⚠ WARNING

All occupants of the vehicle must wear their seat belts at all times. Seat belts and child restraints reduce the risk of serious or fatal injuries for all occupants in the event of a collision or sudden stop. Without a seat belt, occupants could be shifted too close to a deploying air bag, strike the interior structure or be thrown from the vehicle. Properly worn seat belts greatly reduce these hazards.
Always follow the precautions about seat belts, air bags and occupant seat contained in this manual.

Infant or small child

You should be aware of the specific requirements in your country. Child and/or infant seats must be properly placed and installed in the rear seat.
For more information about the use of these restraints, refer to "Child restraint system" on page 3-35.

⚠ WARNING

Every person in your vehicle needs to be properly restrained at all times, including infants and children. Never hold a child in your arms or lap when riding in a vehicle. The violent forces created during a crash will tear the child from your arms and throw the child against the interior. Always use a child restraint appropriate for your child's height and weight.

✻ NOTICE

Small children are best protected from injury in an accident when
(Continued)

(Continued)

properly restrained in the rear seat by a child restraint system that meets the requirements of the Safety Standards of your country. Before buying any child restraint system, make sure that it has a label certifying that it meets Safety Standards of your country. The restraint must be appropriate for your child's height and weight. Check the label on the child restraint for this information. Refer to "Child restraint system" on page 3-35.

Larger children

Children who are too large for child restraint systems should always occupy the rear seat and use the available lap/shoulder belts. The lap portion should be fastened and snugged on the hips and as low as possible. Check if the belt fits periodically. A child's squirming could put the belt out of position. Children are afforded the most safety in the event of an accident when they are restrained by a proper restraint system in the rear seat. If a larger child (over age 12) must be seated in the front seat, the child should be securely restrained by the available lap/shoulder belt and the seat should be placed in the rearmost position. Children age 12 and under should be restrained securely in the rear seat. NEVER place a child age 12 and under in the front seat. NEVER place a rear facing child seat in the front seat of a vehicle.

If the shoulder belt portion slightly touches the child's neck or face, try placing the child closer to the center of the vehicle. If the shoulder belt still touches their face or neck they need to be returned to a child restraint system.

⚠ WARNING

■ Shoulder belts on small children

- **Never allow a shoulder belt to be in contact with a child's neck or face while the vehicle is in motion.**
- **If seat belts are not properly worn and adjusted on children, there is a risk of death or serious injury.**

Pregnant women

The use of a seat belt is recommended for pregnant women to lessen the chance of injury in an accident. When a seat belt is used, the lap belt portion should be placed as low and snugly as possible on the hips, not across the abdomen. For specific recommendations, consult a physician.

⚠ WARNING

■ Pregnant women

Pregnant women must never place the lap portion of the safety belt

(Continued)

(Continued)

over the area of the abdomen where the fetus is located or above the abdomen where the belt could crush the fetus during an impact.

Injured person

A seat belt should be used when an injured person is being transported. When this is necessary, you should consult a physician for recommendations.

One person per belt

Two people (including children) should never attempt to use a single seat belt. This could increase the severity of injuries in case of an accident.

Do not lie down

To reduce the chance of injuries in the event of an accident and to achieve maximum effectiveness of the restraint system, all passengers should be sitting up and the front seats should be in an upright position when the car is moving. A seat belt cannot provide proper protection if the person is lying down in the rear seat or if the front seat is in a reclined position.

⚠ WARNING

Riding with a reclined seatback increases your chance of serious or fatal injuries in the event of a collision or sudden stop. The protection of your restraint system (seat belts and air bags) is greatly reduced by reclining your seat. Seat belts must be snug against your hips and chest to work properly. The more the seatback is reclined, the greater the chance that an occupant's hips will slide under the lap belt causing serious internal injuries or the occupant's neck could strike the shoulder belt. Drivers and passengers should always sit well back in their seats, properly belted, and with the seatbacks upright.

Care of seat belts

Seat belt systems should never be disassembled or modified. In addition, care should be taken to assure that seat belts and belt hardware are not damaged by seat hinges, doors or other abuse.

⚠ WARNING

- **When you return the rear seatback to its upright position after the rear seatback was folded down, be careful not to damage the seat belt webbing or buckle. Be sure that the webbing or buckle does not get caught or pinched in the rear seat. A seat belt with damaged webbing or buckle will not be as strong and could possibly fail during a collision or sudden stop, resulting in serious injury. If the webbing or buckles are damaged, get them replaced immediately.**
- **Seatbelts can become hot in a vehicle that has been closed up in sunny weather.**
  They could burn infants and children.

Periodic inspection

It is recommended that all seat belts be inspected periodically for wear or damage of any kind. Any damaged parts should be replaced as soon as possible.

Keep belts clean and dry

Seat belts should be kept clean and dry. If belts become dirty, they can be cleaned by using a mild soap solution and warm water. Bleach, dye, strong detergents or abrasives should not be used because they may damage and weaken the fabric.

When to replace seat belts

Entire in-use seat belt assembly or assemblies should be replaced if the vehicle has been involved in an accident. This should be done even if no damage is visible. In this case, have the system replaced by a professional workshop. Kia recommends to consult an authorized Kia dealer/service partner.

CHILD RESTRAINT SYSTEM

Children riding in the vehicle should sit in the rear seat and must always be properly restrained to minimize the risk of injury in an accident, sudden stop or sudden maneuver. According to accident statistics, children are safer when properly restrained in the rear seats than in the front seat. Larger children not in a child restraint system should use one of the seat belts provided.
You should be aware of the specific requirements in your country. Child restraint systems must be properly placed and installed in the vehicle seat. You must use a commercially available child restraint system that meets the requirements of the Safety Standards of your country.
Child restraint systems are designed to be secured in vehicle seats by lap belts or the lap belt portion of a lap/shoulder belt, or by a top tether anchor and/or ISOFIX anchors.
Children could be injured or killed in a crash if their restraints are not properly secured. For small children and babies, a child restraint system must be used.

Before buying a particular child restraint system, make sure it fits your vehicle seat and seat belts, and fits your child. Follow all the instructions provided by the manufacturer when installing the child restraint system.

⚠ WARNING

- **To ensure the safety of your child, we strongly recommend a child restraint system to be installed in the rear seats. When installing a child restraint on the front passenger's seat, the air bag must be deactivated and set to the OFF position. (if equipped, passenger's air bag ON/OFF switch)**
- **A seat belt or child restraint system can become very hot if it is left in a closed vehicle on a sunny day, even if the outside temperature does not feel hot. Be sure to check the seat cover and buckles before placing a child there.**

(Continued)

(Continued)

- **When the child restraint system is not in use, store it in the luggage area or fasten it with a seat belt or ISOFIX anchorage, so that it will not be thrown forward in case of a sudden stop or an accident.**
- **All children, even those too large for child restraints, should ride in the rear seat. All children, even those too large for child restraints, should ride in the rear seats.**

⚠ WARNING

To reduce the chance of serious or fatal injuries:
- **Children of all ages are safer when restrained in the rear seat. A child riding in the front passenger seat can be forcefully struck by an inflating air bag resulting in serious or fatal injuries.**
- **Always follow the child restraint system manufacturer's instructions for installation and use of the child restraint system.**

(Continued)

(Continued)

- **Always make sure the child restraint system is secured properly in the vehicle and your child is securely restrained in the child restraint system.**
- **Never hold a child in your arms or lap when riding in a vehicle. The violent forces created during a crash will tear the child from your arms and throw the child against the vehicle's interior.**
- **Never put a seat belt over yourself and a child. During a crash, the belt could press deep into the child causing serious internal injuries.**
- **Never leave children unattended in a vehicle – not even for a short time. The vehicle can heat up very quickly, resulting in serious injuries to children inside the vehicle.**
  Even very young children may inadvertently cause the vehicle to move, entangle themselves in the windows, or lock themselves or others inside the vehicle.

(Continued)

(Continued)

- **Never allow two children, or any two persons, to use the same seat belt.**
- **Children often squirm and reposition themselves improperly. Never let a child ride with the shoulder belt under their arm or behind their back. Always properly position and secure children in the rear seat.**
- **Never allow a child to standup or kneel on the seat or floor of a moving vehicle. During a collision or sudden stop, the child can be violently thrown against the vehicle's interior, resulting in serious injury.**
- **Never use an infant carrier or a child restraint system that "hooks" over a seatback, it may not provide adequate security in an accident.**
- **Seat belts can become very hot, especially when the vehicle is parked in direct sunlight. Always check the seat belt buckles before fastening them over a child.**

(Continued)

(Continued)

- **After an accident, have the system checked by a professional workshop. Kia recommends to visit an authorized Kia dealer/service partner.**
- **If there is not enough space to place the child restraint system because of the driver's seat, install the child restraint system in the rear right seat.**

Using a child restraint system

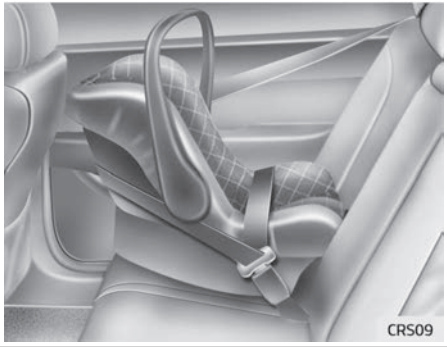

Forward-facing child restraint system



For small children and babies, the use of a child restraint system is required. The child restraint system should be of appropriate size for the child and should be installed in accordance with the manufacturer's instructions.
For safety reasons, we recommend the child restraint system to be used in the rear seats.

⚠ WARNING

Never place a rearward facing child restraint system in the front passenger seat, unless the passenger frontal air bag is deactivated. An inflating passenger frontal air bag could impact the rearward facing child restraint system and kill the child.

⚠ WARNING

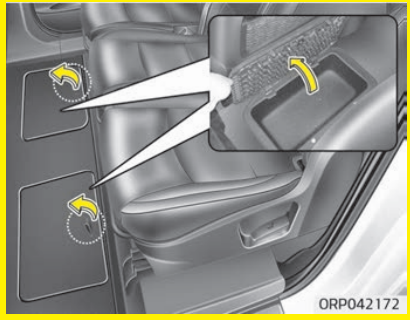

Always remove floor under tray cover when using a child restraint seat with support leg on second row outboard seating position.
Support leg should have to contact stably on the vehicle floor.

⚠ WARNING

- **A child can be seriously injured or killed in a collision if the child restraint system is not properly anchored to the vehicle and the child is not properly restrained in the child restraint system. Before installing the child restraint system, read the instructions supplied by the child restraint system manufacturer.**
- **If the seat belt does not operate as described in this section, have the system checked by a professional workshop. Kia recommends to visit an authorized Kia dealer/service partner.**
- **Failure in observing this manual's instructions regarding child restraint systems and the instructions provided with the child restraint system could increase the chance and/or severity of injury in an accident.**

(Continued)

(Continued)

- **Temporarily re-adjust or remove any headrest interfering with the proper installation of child restraint system. Make sure to put any removed headrests back into position for adult occupants.**

Installing a child restraint system with a lap/shoulder belt

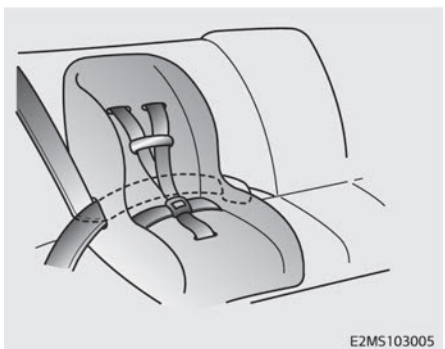
E2MS103005

To install a child restraint system on the seat, do the following:

1. For stable and safe installation of child restraint system, adjust the vehicle seat (seatback angle and/or seat forward and backward) so that your child can fit in the child restraint system in a comfortable manner. To properly accommodate child restraint systems in all adjustment positions, the front passenger seat may be moved rearwards with the seat back not passing beyond the seat belt shoulder anchor. Place the child restraint system in the seat and route the lap/shoulder belt around or through the child restraint system, following the child restraint system manufacturer's instructions. Be sure the seat belt webbing is not twisted.

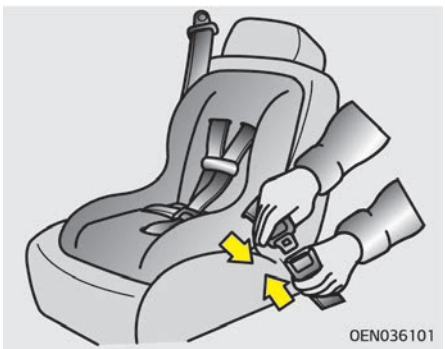
OEN036101

2. Fasten the lap/shoulder belt latch into the buckle. Listen for the distinct “click” sound.
   Position the release button so that it is easy to access in case of an emergency.

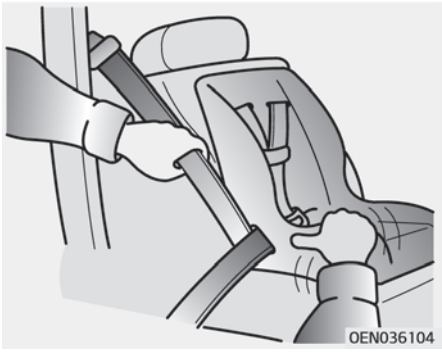

3. Buckle the seat belt and allow the seat belt to take up any slack. After installation of the child restraint system, try to move it in all directions to be sure the child restraint system is securely installed.
   If you need to tighten the belt, pull the webbing toward the retractor. When you unbuckle the seat belt and allow it to retract, the retractor will automatically revert back to its normal seated passenger emergency locking usage condition.

Suitability of each seating position for "universal" category belted child restraint systems according to ECE regulations

Use child restraint systems that have been officially approved and are appropriate for your children.
When using the child restraint systems, refer to the following table.

Mass Group	Seating Position						
	1st row	2nd row			3rd row		
	Passenger	LH	CTR	RH	LH	CTR	RH
0: UP TO 10 KG (0-9 months)	U	U	U	U	U*	N/A	U*
0+: UP TO 13 KG (0-2 years)	U	U	U	U	U*	N/A	U*
I: 9 TO 18 KG (9 months - 4 years)	U	U	U	U	U*	N/A	U*
II: 15 TO 25 KG	U	U	U	U	U*	N/A	U*
II & III: 22 TO 36 KG	U	U	U	U	U*	N/A	U*

U: Suitable for "universal" category restraints approved for use in this mass group
U*: Suitable for "universal" but 2nd seat should be located foremost position

⚠ WARNING

We recommend that a child restraint seat be installed in the rear seat, even if the front passenger's air bag ON/OFF switch is set to the OFF position. To ensure the safety of your child, the front passenger's air bag must be deactivated when it should be necessary to install a child restraint seat on the front passenger seat in exceptional circumstances.

Suitability of each seating position for "universal" category belted child restraint systems according to ECE regulations - For i-size child restraints systems

	Seating Position						
	Front Passenger Outboard	Second Row			Third row		
		Outboard Left	Center	Outboard Right	Left Hand	Center	Right Hand
i-size Child Restraints Systems	X	i-U	X	i-U	X	X	X

i-U = Suitable for i-Size "universal" Child Restraints Systems forward and rearward facing.
X = Seat position not suitable for i-size CRS.

Securing a child restraint systems with top tether anchor system (if equipped)

■ Type A

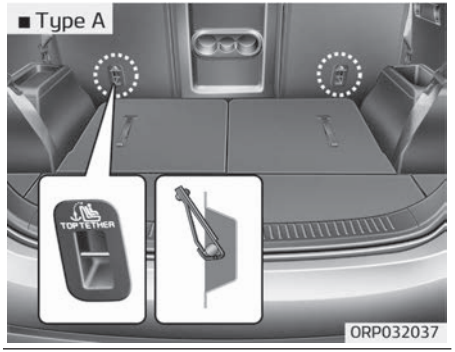

■ Type B

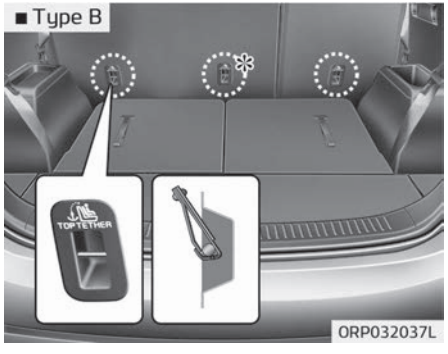

*: if equipped

Child restraint system top tether anchorages are located on the back of the rear seatbacks.



This symbol indicates the position of the tether anchor.

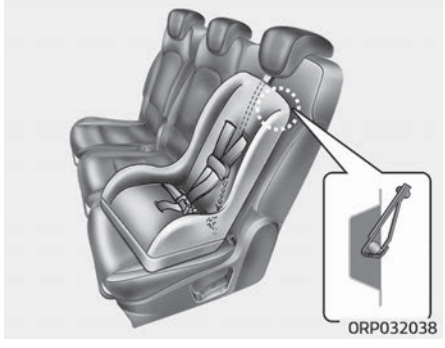

1. Route the child restraint system top tether over the seatback.
   For vehicles with adjustable headrest, route the top tether under the headrest and between the headrest posts, otherwise route the top tether over the top of the seatback. In case of interference between the child restraint system and the headrest remove the particular head restraint for better fitment of the child restraint system.
2. Connect and tighten the top tether to the corresponding child restraint system to secure the child restraint system.

⚠ WARNING

A child can be seriously injured or killed in a collision if the child restraint system is not properly anchored to the car and the child is not properly restrained in the child restraint system. Always follow the child restraint system manufacturer's instructions for installation and use.

⚠ WARNING

■ Top tether

Never mount more than one child restraint system to a single top tether or to a single top tether anchorage point. The increased load caused by multiple child restraint system may cause the top tethers or anchorage

(Continued)

(Continued)

points to break, causing serious injury or death.

⚠ WARNING

■ Child restraint system check

Check that the child restraint system is secure by pushing and pulling it in different directions. Incorrectly fitted child restraint systems may swing, twist, tip or separate causing death or serious injury.

⚠ WARNING

■ Child restraint system anchorage

(Continued)

(Continued)

- **Child restraint system anchorages are designed to withstand only those loads imposed by correctly fitted child restraint systems. Under no circumstances are they to be used for adult seat belts or harnesses or for attaching other items or equipment to the vehicle.**
- **The top tether may not work properly if attached somewhere other than the correct tether anchor.**

Securing a child restraint system with "ISOFIX" system and "Top tether Anchorages"

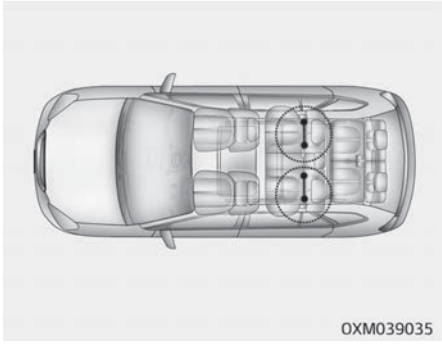

ISOFIX is a standardised method of fitting child restraint systems that eliminates the need to use the standard adult seat belt to secure the child restraint system in the vehicle. This causes a much more secure and positive location with the added benefit of easier and quicker installation.
An ISOFIX child restraint system may only be installed if it has vehicle-specific or universal approval in accordance with the requirements of ECER 44 or ECE-R 129.

❈ ISOFIX: International Standards Organisation FIX

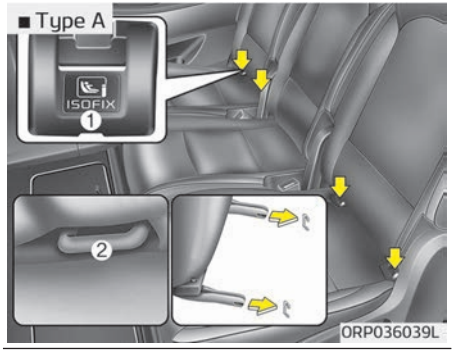

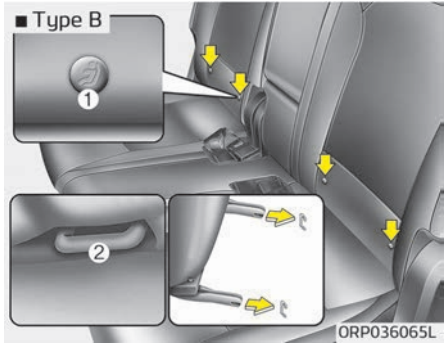

There are ISOFIX symbols located on the lower portion of each side of the 2nd row seatbacks. These symbols indicate the position of the ISOFIX anchors for child restraint systems.
Both rear outboard seats are equipped with a pair of ISOFIX anchorages as well as a corresponding top tether anchorage on the back side of the back rest. The ISOFIX anchorages are located between seat cushion and back rest, marked with the ISOFIX icon.
For installation, child restraint system ISOFIX connectors have to engage with the vehicles ISOFIX anchorages (listen for a CLICK, check potential visual indicators on the child restraint system and cross-check by pulling).
Child restraint systems with universal approval to ECE-R 44 or ECE-R 129 need to be fixed additionally with a top tether strap connected to the corresponding top tether anchorage point in the back rest.
The installation and the use of a child restraint system has to be done according to the installation manual, which is provided with the ISOFIX child restraint system.

❈ (1): ISOFIX Anchor Position Indicator (Type A –, Type B –)
(2): ISOFIX Anchor

For stable and safe installation of child restraint system, adjust the seat position (seat-back angle and/or seat forward and backward) so that your child can fit in the child restraint system in a comfortable manner.

⚠ WARNING

Install the child restraint seat after reclining the seatback.
Reclined 10 clicks (slightly pull up the recline lever) rearward from the first locked position.
❈ First locked position:
is a position when the seatback is unfold to the first locked position from the fully folded seatback position (almost the upright position).

⚠ WARNING

- **When using the vehicle's "ISOFIX" system to install a child restraint system in the rear seat, all unused vehicle rear seat belt metal latch plates or tabs must be latched securely in their seat belt buckles and the seat belt webbing must be retracted behind the child restraint system to prevent the child from reaching and taking hold of unretracted seat belts. Unlatched metal latch plates or tabs may allow the child to reach the unretracted seat belts which may result in strangulation and a serious injury or death to the child in the child restraint system.**
- **Do not place anything around the lower anchors. Also make sure that the seat belt is not caught in the lower anchors.**

To secure the child restraint system

1. To engage the child restraint system to the ISOFIX anchor, insert the child restraint system latch into the ISOFIX anchor. Listen for the audible "click" sound.

⚠ CAUTION

Do not allow the rear seat belt webbing to get scratched or pinched by the ISOFIX-seat latch and ISOFIX anchor during installation.

2. Connect the top tether strap to the corresponding top tether anchorage and tighten it. (Refer to "Securing a child restraint system with "ISOFIX" system and "Top tether Anchorages"" on page 3-43.)

⚠ WARNING

- **Do not install a child restraint system at the center of the rear seat using the vehicle's ISOFIX anchors. The ISOFIX anchors are only provided for the left and right outboard rear seating positions. Do not misuse the ISOFIX anchors by attempting to attach a child restraint system in the middle of the rear seat to the ISOFIX anchors.**
  In a crash, the child restraint system ISOFIX attachments may not be strong enough to secure the child restraint system properly in the center of the rear seat and may break, causing serious injury or death.
- **Do not mount more than one child restraint system to an ISOFIX anchorage point. The improper increased load may cause the anchorage points or top tether anchor to break, causing serious injury or death.**

(Continued)

(Continued)

- **Attach the ISOFIX or ISOFIX-compatible child restraint system only to the appropriate locations shown in the illustration.**
- **Always follow the installation and use instructions provided by the manufacturer of the child restraint system.**

Suitability of each seating position for ISOFIX child restraint systems according to ECE regulations

Mass Group	Size Class	Fixture	Vehicle ISOFIX positions						
			1st row	2nd row			3rd row		
			Passenger	LH	CTR	RH	LH	CTR	RH
Carrycot	F	ISO/L1	X	X	X	X	X	N/A	X
	G	ISO/L2	X	X	X	X	X	N/A	X
0: Up to 10 kg	E	ISO/R1	X	IL	X	IL	X	N/A	X
0+: Up to 13 kg	E	ISO/R1	X	IL	X	IL	X	N/A	X
	D	ISO/R2	X	IL	X	IL	X	N/A	X
	C	ISO/R3	X	IL	X	IL	X	N/A	X
I: 9 to 18 kg	D	ISO/R2	X	IL	X	IL	X	N/A	X
	C	ISO/R3	X	IL	X	IL	X	N/A	X
	B	ISO/F2	X	IUF	X	IUF	X	N/A	X
	B1	ISO/F2X	X	IUF	X	IUF	X	N/A	X
	A	ISO/F3	X	IUF	X	IUF	X	N/A	X

IUF = Suitable for ISOFIX forward child restraints systems of universal category approved for use in the mass group.
IL = Suitable for particular ISOFIX child restraints systems (CRS) approved for this vehicle type according to ECE R44. These ISOFIX CRS are those of the "specific vehicle", "restricted" or "semi-universal" categories.
X = ISOFIX position not suitable for ISOFIX child restraint system in this mass group and/or this size class.

Recommended child restraint systems – For Europe

Mass group	Name	Manufacturer	Type of fixation	ECE-R44 Approval No.
Group 0-I (0-18 kg)	BABY-SAFE Plus + ISOFIX base	Britax Römer*1	Rearward facing with ISOFIX adapter & support leg	E1 04301146
Group I (9-18 kg)	Pearl + FamilyFix Base	Maxi-cosi*2	Forward facing with vehicle ISOFIX lower anchorage + support leg	E4 04443908

*1 : Part number – 55761SBA00 (When you buy at the authorized Kia dealer)
*2 : Part number – 184066 (Pearl), 363000 (FamilyFix)

❋ The 2nd row seat should be located their rearmost position when installing the child restraint system (CRS).

⚠ WARNING

If you install the child restraint system (CRS) with support leg, you should have to remove the "Floor under tray cover". Do not install the support leg on the floor under tray cover. For more details, refer to "Floor under tray" on page 4-146.

CRS manufacturer information

Maxi-cosi	http://www.maxi-cosi.com/
Britax Römer	http://www.britax.com

AIR BAG - SUPPLEMENTAL RESTRAINT SYSTEM (IF EQUIPPED)

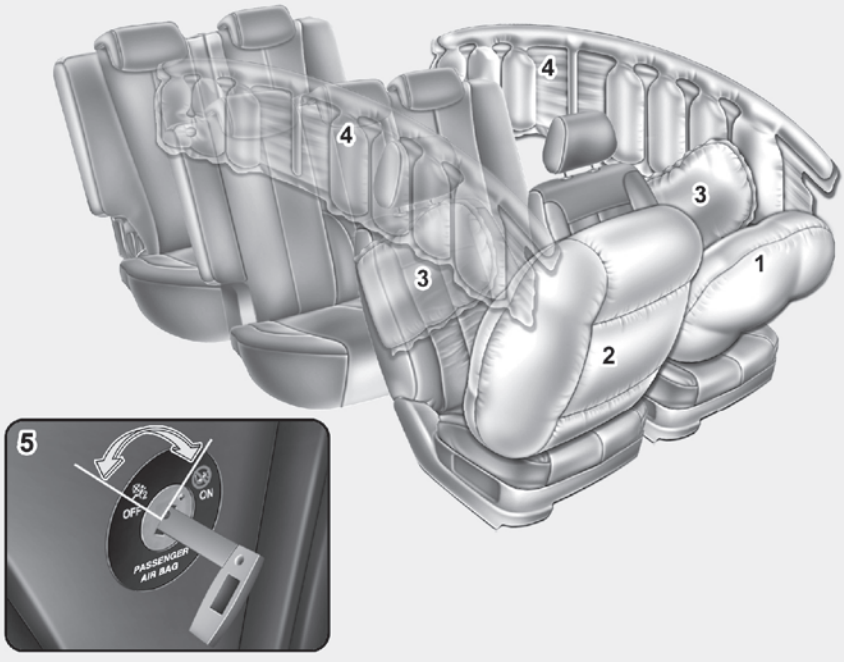

* The actual air bags and seats in the vehicle may differ from the illustration.
* 3rd row seat: if equipped

ORP036040L

1. Driver's front air bag
2. Passenger's front air bag
3. Side air bag (if equipped)
4. Curtain air bag (if equipped)
5. Passenger's front air bag ON/OFF switch (if equipped)

⚠ WARNING

- **Even in vehicles with air bags, you and your passengers must always wear the safety belts provided in order to minimize the risk and severity of injury in the event of a collision or in most rollover situations.**
- **SRS and pretensioners contain explosive chemicals.**
  If scrapping a vehicle without removing SRS and pretensioners from a vehicle, it may cause fire. Before scrapping a vehicle, contact a professional workshop. Kia recommends to visit an authorized Kia dealer/service partner.

(Continued)

(Continued)

- **Keep the SRS parts and wirings away from water or any liquid. If the SRS components are inoperative due to exposure to water or liquids, it may cause fire or severe injury.**

How does the air bag system operate

- Air bags are activated (able to inflate if necessary) only when the ignition switch is turned to the ON or START position.
- Air bags inflate instantly in the event of serious frontal or side collision (if equipped with side air bag or curtain air bag) in order to help protect the occupants from serious physical injury.
- There is no single speed at which the air bags will inflate.
  Generally, air bags are designed to inflate based upon the severity of a collision and its direction. These two factors determine whether the sensors produce an electronic deployment/inflation signal.
- Air bag deployment depends on a number of factors including vehicle speed, angles of impact and the density and stiffness of the vehicles or objects which your vehicle hits in the collision. The determining, factors are not limited to those mentioned above.
- The front air bags will completely inflate and deflate in an instant.
  It is virtually impossible for you to see the air bags inflate during an accident. It is much more likely that you will simply see the deflated air bags hanging out of their storage compartments after the collision.
- In order to help provide protection in a severe collision, the air bags must inflate rapidly. The speed of air bag inflation is a consequence of extremely short time in which a collision occurs and the need to get the air bag between the occupant and the vehicle structures before the occupant impacts those structures. This speed of inflation reduces the risk of serious or life-threatening injuries in a severe collision and is thus a necessary part of air bag design.
  However, air bag inflation can also cause injuries which can include facial abrasions, bruises and broken bones because the inflation speed also causes the air bags to expand with a great deal of force.
- **There are even circumstances under which contact with the steering wheel air bag can cause fatal injuries, especially if the occupant is positioned excessively close to the steering wheel.**

⚠ WARNING

- **To avoid severe personal injury or death caused by deploying air bags in a collision, the driver should sit as far back from the steering wheel air bag. The front passenger should always move their seat as far back as possible and sit back in their seat.**
- **Air bag inflates instantly in an event of a collision, passengers may be injured by the air bag expansion force if they are not in a proper position.**
- **Air bag inflation may cause injuries including facial or bodily abrasions, injuries from broken glasses or burns.**

Noise and smoke

When the air bags inflate, they make a loud noise and they leave smoke and powder in the air inside of the vehicle. This is normal and is a result of the ignition of the air bag inflator. After the air bag inflates, you may feel substantial discomfort in breathing due to the contact of your chest with both the seat belt and the air bag, as well as from breathing the smoke and powder. Open your doors and/or windows as soon as possible after impact in order to reduce discomfort and prevent prolonged exposure to the smoke and powder.

Though smoke and powder are nontoxic, it may cause irritation to the skin (eyes, nose and throat, etc.). If this is the case, wash and rinse with cold water immediately and consult the doctor if the symptom persists.

⚠ WARNING

- **When the air bags deploy, the air bag related parts in the steering wheel and/or instrument panel and/or in both sides of the roof rails above the front and rear doors are very hot. To prevent injury, do not touch the air bag storage areas internal components immediately after an air bag has inflated.**
- **Do not install or place any accessories near air bag deployment areas, such as the instrument panel, windows, pillars, and roof rails.**

Front passenger's air bag warning label for child restraint system

■ Type A



OYDESA2042

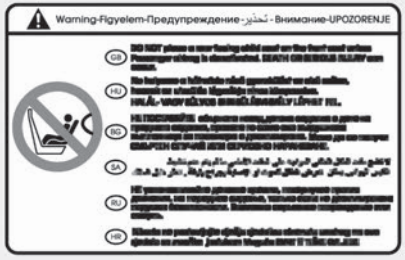

OLM034310

⚠ WARNING

Never place a rear facing child restraint in the front passenger seat, unless the passenger-side air bag is deactivated. An inflating passenger-side air bag could impact the rear-facing child restraint and kill the child.

In addition, we recommend that you do not place front-facing child restraints in the front passenger's seat either. If the front passenger air bag inflates, it could cause serious or fatal injuries to the child.
If your vehicle is equipped with the passenger's front air bag ON/OFF switch, you can activate or deactivate the front passenger's air bag when necessary.
For more details, please refer to "Passenger's front air bag ON/OFF switch" on page 3-60. (if equipped)

⚠ WARNING

- **NEVER use a rearward facing child restraint on a seat protected by an ACTIVE AIR BAG in front of it, DEATH or SERIOUS INJURY to the CHILD can occur.**
- **When children are seated in the rear outboard seats of a vehicle equipped with side and/or curtain air bags, be sure to install the child restraint system as far away from the door side as possible, and securely lock the child restraint system in position.**
  Inflation of side and/or curtain air bags could cause serious injury or death to an infant or child.

Air bag warning and indicator

Air bag warning light



The purpose of the air bag warning light in your instrument panel is to alert you of a potential problem with your air bag - Supplemental Restraint System (SRS).
When the ignition switch is turned ON, the warning light should illuminate for approximately 6 seconds, then go off.
Have the system checked if:

- The light does not turn on briefly when you turn the ignition ON.
- The light stays on after illuminating for approximately 6 seconds.
- The light comes on while the vehicle is in motion.
- The light blinks when the ignition switch is in ON position.

Passenger's front air bag ON indicator (if equipped)



❊ The actual indicator in the vehicle may differ from the illustration.

The passenger's front air bag ON indicator illuminates for approximately 4 seconds after the ignition switch is turned to the ON position.

The passenger's front air bag ON indicator also comes on when the passenger's front air bag ON/OFF switch is set to the ON position and goes off after approximately 60 seconds.

Passenger's front air bag OFF indicator (if equipped)

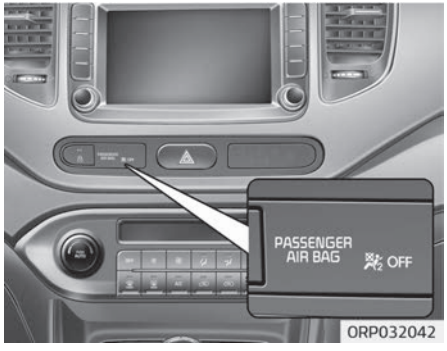

❊ The actual indicator in the vehicle may differ from the illustration.

The passenger's front air bag OFF indicator illuminates for about 4 seconds after the ignition switch is turned to the ON position.

The passenger's front air bag OFF indicator also comes on when the passenger's front air bag ON/OFF switch is set to the OFF position and goes off when the passenger's front air bag ON/OFF switch is set to the ON position.

⚠ CAUTION

If the passenger's front air bag ON/OFF switch malfunctions, the passenger's front air bag OFF indicator will not illuminate (the passenger's front air bag ON indicator comes on and goes off after approximately 60 seconds) and the passenger's front air bag will inflate in a frontal impact even if the passenger's front air bag ON/OFF switch is set to the OFF position.
In this case, have the passenger's front air bag ON/OFF switch and the SRS air bag system inspected by a professional workshop.
Kia recommends to visit an authorized Kia dealer/service partner.

SRS components and functions

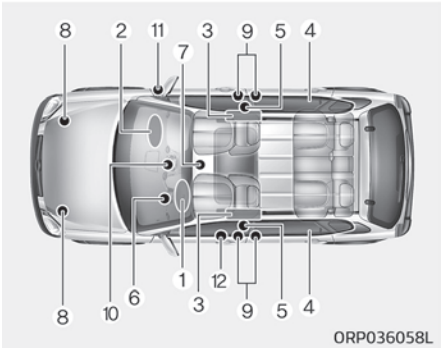

The SRS consists of the following components:

1. Driver's front air bag module
2. Passenger's front air bag module
3. Side air bag modules*
4. Curtain air bag modules*
5. Retractor pre-tensioner assemblies
6. Air bag warning light
7. SRS control module (SRSCM)
8. Front impact sensors
9. Side impact sensors*
10. Passenger's front air bag ON/OFF indicator*
11. Passenger's front air bag ON/OFF switch*
12. EFD (Emergency Fastening Device)*

*: if equipped

The SRSCM continually monitors all elements while the ignition switch is ON to determine if a frontal, near-frontal impact or side impact is severe enough to require air bag deployment or pre-tensioner seat belt deployment.
The SRS air bag warning light on the instrument panel will illuminate for about 6 seconds after the ignition switch is turned to the ON position, after which the air bag warning light should go out.

⚠ WARNING

If any of the following conditions occurs, this indicates a malfunction of the SRS. In this case, have the system inspected by a professional workshop. Kia recommends to visit an authorized Kia dealer/service partner.
(Continued)

*: if equipped

(Continued)

- **The light does not turn on briefly when you turn the ignition ON.**
- **The light stays on after illuminating for approximately 6 seconds.**
- **The light comes on while the vehicle is in motion.**
- **The light blinks when the ignition switch is in ON position.**

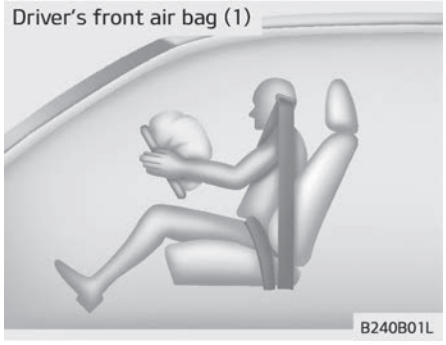

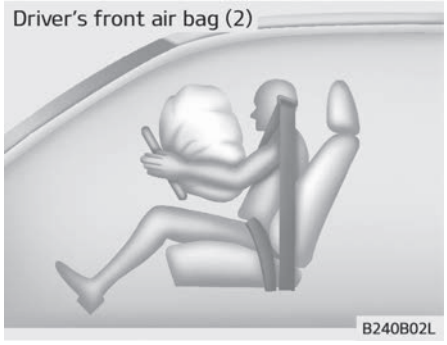

The air bag modules are located both in the center of the steering wheel and in the front passenger's panel above the glove box. When the SRSCM detects a sufficiently severe impact to the front of the vehicle, it will automatically deploy the front air bags.

Upon deployment, tear seams molded directly into the pad covers will separate under pressure from the expansion of the air bags. Further opening of the covers then allows full inflation of the air bags.

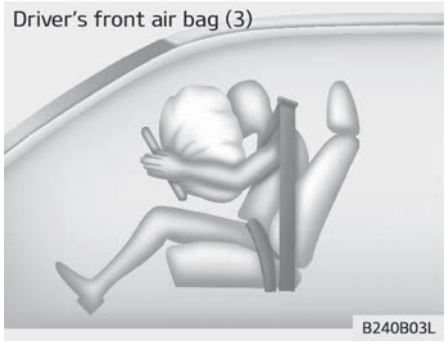

A fully inflated air bag, in combination with a properly worn seat belt, slows the driver's or the passenger's forward motion, reducing the risk of head and chest injury.
After complete inflation, the air bag immediately starts deflating, enabling the driver to maintain forward visibility and the ability to steer or operate other controls.



⚠ WARNING

- **Do not install or place any accessories (drink holder, CD holder, sticker, etc.) on the front passenger's panel above the glove box in a vehicle with a passenger's air bag. Such objects may become dangerous projectiles and cause injury if the passenger's air bag inflates.**

(Continued)

(Continued)

- **When installing a container of liquid air freshener inside the vehicle, do not place it near the instrument cluster nor on the instrument panel surface.**
  It may become dangerous projectiles and cause injury if the passenger's air bag inflates.

⚠ WARNING

- **If an air bag deploys, there may be a loud noise followed by a fine dust released in the vehicle. These conditions are normal and are not hazardous - the air bags are packed in this fine powder. The dust generated during air bag deployment may cause skin or eye irritation as well as aggravate asthma for some persons. Always wash all exposed skin areas thoroughly with cold water and a mild soap after an accident in which the air bags were deployed.**

(Continued)

(Continued)

- **The SRS can function only when the ignition key is in the ON position. If the SRS air bag warning light does not illuminate, or continuously remains on after illuminating for about 6 seconds when the ignition key is turned to the ON position, or after the engine is started, comes on while driving, the SRS is not working properly. In this case, have the system inspected by a professional workshop. Kia recommends to visit an authorized Kia dealer/service partner.**
- **Before you replace a fuse or disconnect a battery terminal, turn the ignition switch to the LOCK position and remove the ignition key. Never remove or replace the air bag related fuse(s) when the ignition switch is in the ON position. Failure to heed this warning will cause the SRS air bag warning light to illuminate.**

Driver's and passenger's front air bag

■ Driver's front air bag

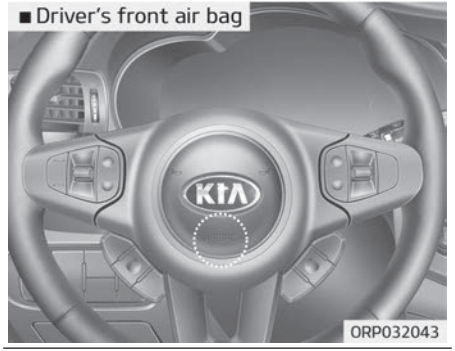

■ Passenger's front air bag



Your vehicle is equipped with a Supplemental Restraint (Air Bag) System and lap/shoulder belts at both the driver and passenger seating positions.
The indications of the system's presence are the letters "AIRBAG" intagliated on the air bag pad cover in the steering wheel and the passenger's side front panel pad above the glove box.
The SRS consists of air bags installed under the pad covers in the center of the steering wheel and the passenger's side front panel above the glove box.
The purpose of the SRS is to provide the vehicle's driver and/or the front passenger with additional protection than that offered by the seat belt system alone in case of a frontal impact of sufficient severity.

⚠ WARNING

Always use seat belts and child restraints – every trip, every time, everyone! Air bags inflate with considerable force and in the blink of an eye. Seat belts help keep occupants

(Continued)

(Continued)

in proper position to obtain maximum benefit from the air bag.
Even with air bags, improperly and unbelted occupants can be severely injured when the air bag inflates. Always follow the precautions about seat belts, air bags and occupant safety contained in this manual.
To reduce the chance of serious or fatal injuries and receive the maximum safety benefit from your restraint system:

- **Never place a child in any child or booster seat in the front seat.**
- **ABC – Always Buckle Children in the back seat. It is the safest place for children of any age to ride.**
- **Front and side air bags can injure occupants improperly positioned in the front seats.**
- **Move your seat as far back as practical from the front air bags, while still maintaining control of the vehicle.**

(Continued)

(Continued)

- **You and your passengers should never sit or lean unnecessarily close to the air bags. Improperly positioned drivers and passengers can be severely injured by inflating air bags.**
- **Never lean against the door or center console – always sit in an upright position.**
- **No objects should be placed over or near the air bag modules on the steering wheel, instrument panel, and the front passenger's panel above the glove box, because any such object could cause harm if the vehicle is in a crash severe enough to cause the air bags to deploy.**
- **Do not tamper with or disconnect SRS wiring or other components of the SRS system. Doing so could result in injury, due to accidental deployment of the air bags or by rendering the SRS inoperative.**

(Continued)

(Continued)

- **If the SRS air bag warning light remains illuminated while the vehicle is being driven, have the system inspected by a professional workshop. Kia recommends to visit an authorized Kia dealer/service partner.**
- **Air bags can only be used once – have the system replaced by a professional workshop.**
  Kia recommends to visit an authorized Kia dealer/service partner.
- **The SRS is designed to deploy the front air bags only when an impact is sufficiently severe and when the impact angle is less than 30° from the forward longitudinal axis of the vehicle. Additionally, the air bags will only deploy once. Seat belts must be worn at all times.**
- **Front air bags are not intended to deploy in side-impact, rear-impact or rollover crashes. In addition, front air bags will not deploy in frontal crashes below the deployment threshold.**

(Continued)

(Continued)

- **A child restraint system must never be placed in the front seat. The infant or child could be severely injured or killed by an air bag deployment in case of an accident.**
- **Children age 12 and under must always be properly restrained in the rear seat. Never allow children to ride in the front passenger seat. If a child over 12 must be seated in the front seat, he or she must be properly belted and the seat should be moved as far back as possible.**
- **For maximum safety protection in all types of crashes, all occupants including the driver should always wear their seat belts whether or not an air bag is also provided at their seating position to minimize the risk of severe injury or death in the event of a crash. Do not sit or lean unnecessarily close to the air bag while the vehicle is in motion.**

(Continued)

(Continued)

- **Sitting improperly or out of position can result in serious or fatal injury in a crash. All occupants should sit upright with the seat back in an upright position, centered on the seat cushion with their seat belt on, legs comfortably extended and their feet on the floor until the vehicle is parked and the ignition key is removed.**
- **The SRS air bag system must deploy very rapidly to provide protection in a crash. If an occupant is out of position because of not wearing a seat belt, the air bag may forcefully contact the occupant causing serious or fatal injuries.**

Passenger's front air bag ON/OFF switch (if equipped)



The passenger's front air bag can be deactivated by the passenger's front air bag ON/OFF switch if a child restraint is installed on the front passenger's seat or if the front passenger's seat is unoccupied by a person.
To ensure the safety of your child, the passenger's front air bag must be deactivated when it should be necessary to install a rearward facing child seat on the front passenger seat in exceptional circumstances.

To deactivate or reactivate the passenger's front air bag:



ORP032041

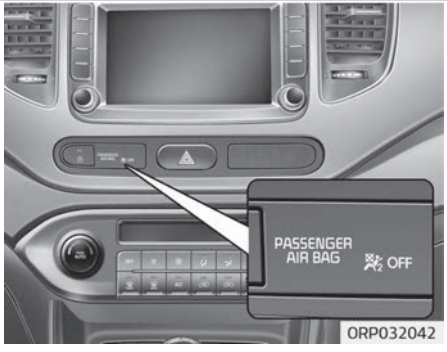

ORP032042

✻ The actual indicator in the vehicle may differ from the illustration.

To deactivate the passenger's front air bag, insert the mechanical key into the passenger's front air bag ON/OFF switch and turn it to the OFF position.
The passenger's front air bag OFF indicator (✻) will illuminate and stay on until the passenger's front air bag is reactivated.
To reactivate the passenger's front air bag, insert the mechanical key into the passenger's front air bag ON/OFF switch and turn it to the ON position.
The passenger's front air bag OFF indicator will go out and the passenger's front air bag ON indicator (✻) will illuminate for approximately 60 seconds.

⚠ WARNING

On some models, the front air bag ON/OFF switch could turn by using a similar small rigid device. Always check the status of the front air bag ON/OFF switch and passenger's front air bag ON/OFF indicator.

✻ NOTICE

- When the passenger's front air bag ON/OFF switch is set to the ON position, the passenger's front air bag is activated and child or infant seat should not be installed on the front passenger seat.
- When the passenger's front air bag ON/OFF switch is set to the OFF position, the passenger's front air bag is deactivated.

⚠ CAUTION

- **If the passenger's front air bag ON/OFF switch is not working properly, the air bag warning light ( ) on the instrument panel will illuminate.**
  And, the passenger's front air bag OFF indicator ( ) will not illuminate (The passenger's front air bag ON indicator comes on and goes off after approximately 60 seconds), the SRS Control Module reactivates the passenger's front air bag and the passenger's front air bag will inflate in frontal impact crashes even if the passenger's front air bag ON/OFF switch is set to the OFF position.
  In this case, have the system inspected by a professional workshop. Kia recommends to visit an authorized Kia dealer/service partner.

(Continued)

(Continued)

- **If the SRS air bag warning light blinks or does not illuminate when the ignition switch is turned to the ON position, or if it illuminates while the vehicle is being driven, have the system inspected by a professional workshop. Kia recommends to visit an authorized Kia dealer/service partner.**

⚠ WARNING

- **The driver is responsible for the proper position of the passenger's front air bag ON/OFF switch.**
- **Deactivate the passenger's front air bag only when the ignition switch is switched off, or the malfunction may occur in the SRS Control Module.**
  And there may be a danger that the driver's and/or front passenger's and/or side and curtain air bag may fail to trigger, or not trigger correctly during a collision.

(Continued)

(Continued)

- **Never install a rearward facing child seat on the front passenger's seat unless the passenger's front air bag has been deactivated. The infant or child could be severely injured or killed by an air bag deployment in case of an accident.**
- **Even though your vehicle is equipped with the passenger's front air bag ON/OFF switch, do not install a child restraint system in the front passenger's seat. A child restraint system must never be placed in the front seat. Children who are too large for child restraint systems should always occupy the rear seat and use the available lap/shoulder belts. Children are afforded the most safety in the event of an accident when they are restrained by a proper restraint system in the rear seat.**
- **As soon as the child seat is no longer needed on the front passenger's seat, reactivate the front passenger's air bag.**

⚠ WARNING

■ No attaching objects

No objects (such as crash pad cover, cellular phone holder, cup holder, perfume or stickers) should be placed over or near the air bag modules on the steering wheel, instrument panel, windshield glass, and the front passenger's panel above the glove box. Such objects could cause harm if the vehicle is in a crash severe enough to cause the air bags to deploy. Do not place any objects over the air bag or between the air bag and yourself.

Side air bag (if equipped)

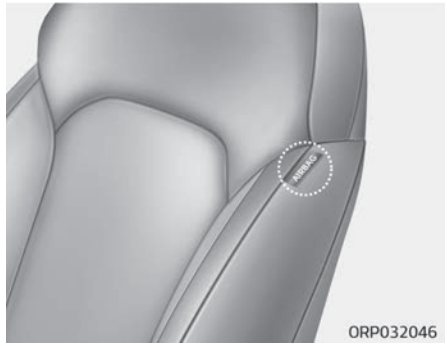

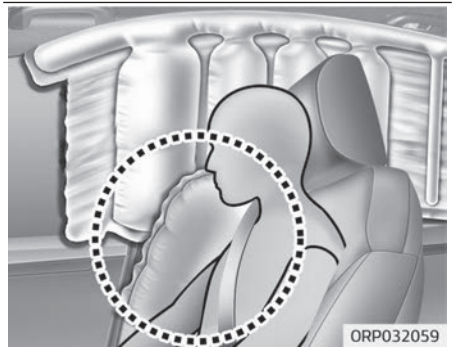

✻ The actual air bags in the vehicle may differ from the illustration.

Your vehicle is equipped with a side air bag in each front seat.
The purpose of the air bag is to provide the vehicle's driver and/or the front passenger with additional protection than that offered by the seat belt alone.
The side air bags are designed to deploy only during certain side-impact collisions, depending on the crash severity, angle, speed and point of impact. The side air bags are not designed to deploy in all side impact situations.

⚠ WARNING

Do not allow the passengers to lean their heads or bodies onto doors, put their arms on the doors, stretch their arms out of the window, or place objects between the doors and passengers when they are seated on seats equipped with side and/or curtain air bags.

⚠ WARNING

- **The side air bag is supplemental to the driver's and the passenger's seat belt systems and is not a substitute for them. Therefore your seat belts must be worn at all times while the vehicle is in motion. The air bags deploy only in certain side impact conditions severe enough to cause significant injury to the vehicle occupants.**
- **For best protection from the side air bag system and to avoid being injured by the deploying side air bag, both front seat occupants should sit in an upright position with the seat belt properly fastened. The driver's hands should be placed on the steering wheel at the 9:00 and 3:00 positions. The passenger's arms and hands should be placed on their laps.**
- **Do not use any accessory seat covers.**
- **Use of seat covers could reduce or prevent the effectiveness of the system.**

(Continued)

(Continued)

- **To prevent unexpected deployment of the side air bag that may result in personal injury, avoid impact to the side impact sensor when the ignition key is on.**
- **If the seat or seat cover is damaged, have the system serviced by a professional workshop.**
  Kia recommends to visit an authorized Kia dealer/service partner.
- **Never place or insert any object into any small opening near side airbag labels attached to the vehicle seats. When the air bag deploys, the object may affect the deployment and result in unexpected accident or bodily harm.**

⚠ WARNING

■ No attaching objects

(Continued)

(Continued)

- **Do not place any objects over the air bag or between the air bag and yourself. Also, do not attach any objects around the area the air bag inflates such as the door, side door glass, front and rear pillar.**
- **Do not place any objects between the door and the seat. They may become dangerous projectiles if the side air bag inflates.**
- **Do not install any accessories on the side or near the side air bags.**

Curtain air bag (if equipped)

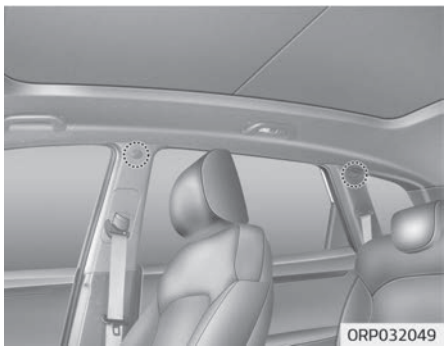

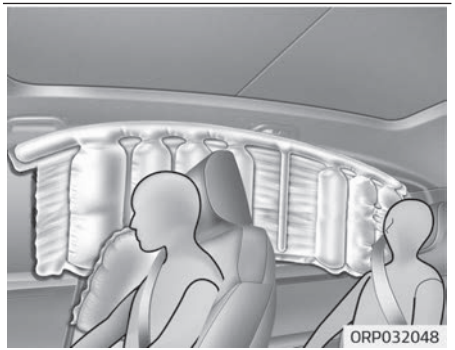

❊ The actual air bags in the vehicle may differ from the illustration.

Curtain air bags are located along both sides of the roof rails above the front and rear doors.
They are designed to help protect the heads of the front seat occupants and the rear outboard seat occupants in certain side impact collisions.
The curtain air bags are designed to deploy during certain side impact collisions, depending on the crash severity, angle, speed and point of impact. The curtain air bags are not designed to deploy in all side impact situations, collisions from the front or rear of the vehicle or in most rollover situations.

⚠ WARNING

- **In order for side and curtain air bags to provide the best protection, both front seat occupants and both outboard rear occupants should sit in an upright position with the seat belts properly fastened.**
  Importantly, children should sit in a proper child restraint system in the rear seat.

(Continued)

(Continued)

- **When children are seated in the rear outboard seats, they must be seated in the proper child restraint system.**
  Make sure to put the child restraint system as far away from the door side as possible, and secure the child restraint system in a locked position.
- **Do not allow the passengers to lean their heads or bodies onto doors, put their arms on the doors, stretch their arms out of the window, or place objects between the doors and passengers when they are seated on seats equipped with side and/or curtain air bags.**
- **Never try to open or repair any components of the curtain air bag system. If necessary, have the system serviced by a professional workshop. Kia recommends to visit an authorized Kia dealer/service partner.**

Failure to follow the above mentioned instructions can result in injury or death to the vehicle occupants in an accident.

⚠ WARNING

■ No attaching objects

- **Do not place any objects over the air bag. Also, do not attach any objects around the area the air bag inflates such as the door, side door glass, front and rear pillar, roof side rail.**
- **Do not hang hard or breakable objects on the coat hook.**
- **Do not hang heavy items on the coat hooks for safety reasons.**

Why didn't my air bag go off in a collision?



ORP036050L/ORP032051/ORP036052L/ORP032053/ORP032054

Inflation and non-inflation conditions of the air bag

There are many types of accidents in which the air bag would not be expected to provide additional protection. These include rear impacts, second or third collisions in multiple impact accidents, as well as low speed impacts.

Air bag collision sensors

1. SRS control module
2. Front impact sensor
3. Side pressure sensor (if equipped)
4. Side impact sensor (if equipped)

⚠ WARNING

- **Do not hit or allow any objects to impact the locations where air bag or sensors are installed. This may cause unexpected air bag deployment, which could result in serious personal injury or death.**

(Continued)

(Continued)

- **If the installation location or angle of the sensors is altered in any way, the air bags may deploy when they should not or they may not deploy when they should, causing severe injury or death. Therefore, do not try to perform maintenance on or around the air bag sensors. Have the system serviced by a professional workshop. Kia recommends to visit an authorized Kia dealer/service partner.**
- **Problems may arise if the sensor installation angles are changed due to the deformation of the front bumper, body or B pillar and C pillars where side collision sensors are installed. In this case, have the system serviced by a professional workshop. Kia recommends to visit an authorized Kia dealer/service partner.**

(Continued)

(Continued)

- **Your vehicle has been designed to absorb impact and deploy the air bag(s) in certain collisions. Installing bumper guards or replacing a bumper with non-genuine parts may adversely affect your vehicles collision and air bag deployment performance.**

Air bag inflation conditions

Front air bags



Front air bags are designed to inflate in a frontal collision depending on the intensity, speed or angles of impact of the front collision.

Side and curtain air bags (if equipped)



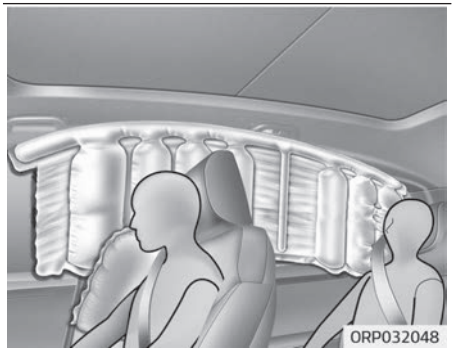

❈ The actual air bags in the vehicle may differ from the illustration.

Side and/or curtain air bags are designed to inflate when an impact is detected by side collision sensors depending on the strength, speed or angles of impact resulting from a side impact collision.

Although the front air bags (driver's and front passenger's air bags) are designed to inflate only in frontal collisions, they also may inflate in other types of collisions if the front impact sensors detect a sufficient impact. Side air bags (side and/or curtain air bags) are designed to inflate only in side impact collisions, but they may inflate in other collisions if the side impact sensors detect a sufficient impact.

If the vehicle chassis is impacted by bumps or objects on unimproved roads or sidewalks, air bags may deploy. Drive carefully on unimproved roads or on surfaces not designed for vehicle traffic to prevent unintended air bag deployment.

Air bag non-inflation conditions



- In certain low-speed collisions the air bags may not deploy. The air bags are designed not to deploy in such cases because they may not provide benefits beyond the protection of the seat belts in such collisions.

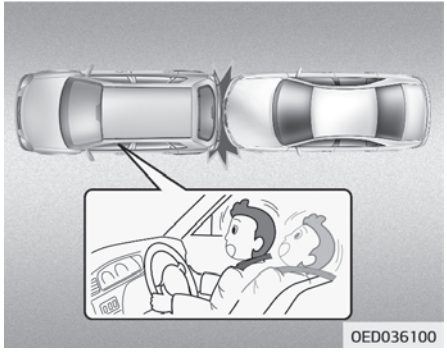

- Air bags are not designed to inflate in rear collisions, because occupants are moved backward by the force of the impact. In this case, inflated air bags would not be able to provide any additional benefit.



- Front air bags may not inflate in side impact collisions, because occupants move to the direction of the collision, and thus in side impacts, frontal air bag deployment would not provide additional occupant protection.

- However, if equipped with side and curtain air bags, the air bags may inflate depending on the intensity, vehicle speed and angles of impact.

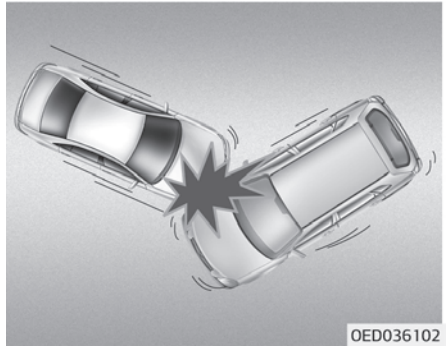

- In an angled collision, the force of impact may direct the occupants in a direction where the air bags would not be able to provide any additional benefit, and thus the sensors may not deploy any air bags.

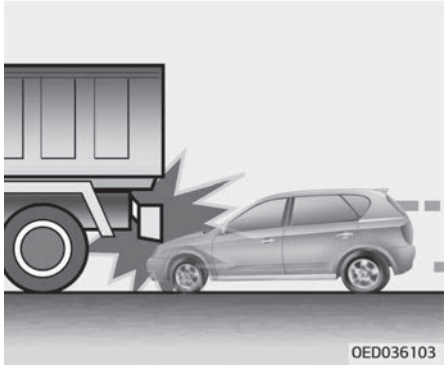

- Just before impact, drivers often brake heavily. Such heavy braking lowers the front portion of the vehicle causing it to “ride” under a vehicle with a higher ground clearance. Air bags may not inflate in this "under-ride" situation because deceleration forces that are detected by sensors may be significantly replaced by such “under-ride” collisions.

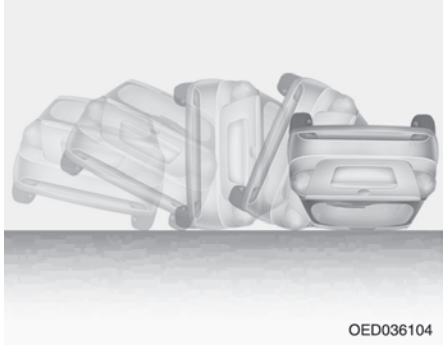

- Air bags may not inflate in rollover accidents because the vehicle can not detect rollover accident.
  However, side and/or curtain air bags may inflate when the vehicle is rolled over following (or after) side impact collision.

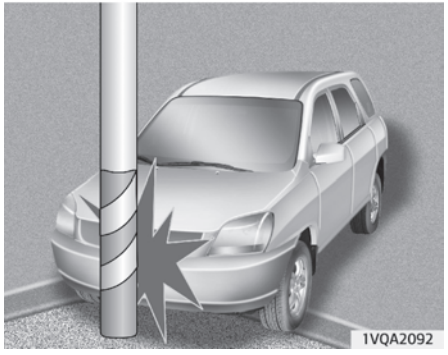

- Air bags may not inflate if the vehicle collides with objects such as utility poles or trees, where the point of impact is concentrated to one area and the full force of the impact is not delivered to the sensors.

SRS care

The SRS is virtually maintenance-free and so there are no parts you can safely service by yourself. If the SRS air bag warning light does not illuminate, or continuously remains on, have the system inspected by a professional workshop. Kia recommends to visit an authorized Kia dealer/service partner.

⚠ WARNING

- **Modification to SRS components or wiring, including the addition of any kind of badges to the pad covers or modifications to the body structure, can adversely affect SRS performance and lead to possible injury.**
- **For cleaning the air bag pad covers, use only a soft, dry cloth or one which has been moistened with plain water. Solvents or cleaners could adversely affect the air bag covers and proper deployment of the system.**
- **No objects should be placed over or near the air bag modules on the steering wheel, instrument panel, and the front passenger's panel above the glove box, because any such object could cause harm if the vehicle is in a crash severe enough to cause the air bags to inflate.**

(Continued)

(Continued)

- **If the air bags inflate, have the system replaced by a professional workshop.**
  Kia recommends to visit an authorized Kia dealer/service partner.
- **Do not tamper with or disconnect SRS wiring, or other components of the SRS system. Doing so could result in injury, due to accidental inflation of the air bags or by rendering the SRS inoperative.**
- **If components of the air bag system must be discarded, or if the vehicle must be scrapped, certain safety precautions must be observed. An authorized Kia dealer knows these precautions and can give you the necessary information. Failure to follow these precautions and procedures could increase the risk of personal injury.**

(Continued)

(Continued)

- **If your car was flooded and has soaked carpeting or water on flooring, you shouldn't try to start the engine; in this case, have your vehicle inspected by a professional workshop. Kia recommends to contact an authorized Kia dealer/service partner.**

Additional safety precautions

- Never let passengers ride in the cargo area or on top of a folded-down back seat. All occupants should sit upright, fully back in their seats with their seat belts on and their feet on the floor.
- Passengers should not move out of or change seats while the vehicle is moving. A passenger who is not wearing a seat belt during a crash or emergency stop can be thrown against the inside of the vehicle, against other occupants, or out of the vehicle.
- Each seat belt is designed to restrain one occupant. If more than one person uses the same seat belt, they could be seriously injured or killed in a collision.

- **Do not use any accessories on seat belts.** Devices claiming to improve occupant comfort or reposition the seat belt can reduce the protection provided by the seat belt and increase the chance of serious injury in a crash.
- **Passengers should not place hard or sharp objects between themselves and the air bags.** Carrying hard or sharp objects on your lap or in your mouth can result in injuries if an air bag inflates.
- **Keep occupants away from the air bag covers.** All occupants should sit upright, fully back in their seats with their seat belts on and their feet on the floor. If occupants are too close to the air bag covers, they could be injured if the air bags inflate.
- **Do not attach or place objects on or near the air bag covers.** Any object attached to or placed on the front or side air bag covers could interfere with the proper operation of the air bags.
- **Do not modify the front seats.** Modification of the front seats could interfere with the operation of the supplemental restraint system sensing components or side air bags.
- **Do not place items under the front seats.** Placing items under the front seats could interfere with the operation of the supplemental restraint system sensing components and wiring harnesses.
- **Never hold an infant or child on your lap.** The infant or child could be seriously injured or killed in the event of a crash. All infants and children should be properly restrained in appropriate child safety seats or seat belts in the rear seat.

⚠ WARNING

- **Sitting improperly or out of position can cause occupants to be shifted too close to a deploying air bag, strike the interior structure or be thrown from the vehicle resulting in serious injury or death.**
- **Always sit upright with the seatback in an upright position, centered on the seat cushion with your seat belt on, legs comfortably extended and your feet on the floor.**

Adding equipment to or modifying your air bag-equipped vehicle

If you modify your vehicle by changing your vehicle's frame, bumper system, front end or side sheet metal or ride height, this may affect the operation of your vehicle's air bag system.

Air bag warning label

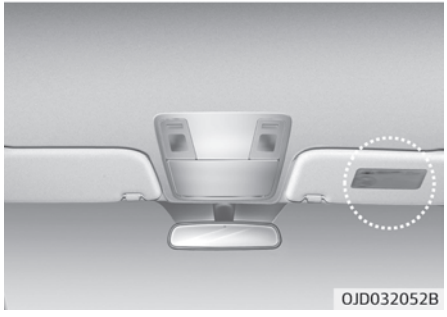

Air bag warning labels are attached to alert driver and passengers of potential risk of air bag system.

Note that these government warnings focus on the risk of children. We also want you to be aware of the risks adults are exposed to which have been described in “Additional safety precautions” on page 3-72.

Features of your vehicle

Keys....4-04
Record your key number....4-04
Key operations....4-04
Immobilizer system....4-04
Remote keyless entry....4-06
Remote keyless entry system operations....4-06
Transmitter precautions....4-07
Battery replacement....4-08
Smart key....4-10
Smart key function....4-10
Smart key precautions....4-11
Door lock/unlock in an emergency situation....4-12
Theft-alarm system....4-13
Armed stage....4-13
Theft-alarm stage....4-14
Disarmed stage....4-14
Door locks....4-16
Operating door locks from outside the vehicle....4-16
Operating door locks from inside the vehicle....4-17
Deadlocks....4-20
Door lock/unlock features....4-20
Child-protector rear door lock....4-21
Tailgate....4-22
Opening the tailgate....4-22
Closing the tailgate....4-22
Emergency tailgate safety release....4-23
Windows....4-24
Power windows....4-25
Hood....4-30
Opening the hood....4-30
Closing the hood....4-30
Fuel filler lid....4-32
Opening the fuel filler lid....4-32
Closing the fuel filler lid....4-32
Panorama sunroof....4-35
Sunroof open warning....4-35
Sunshade....4-36
Sliding the sunroof....4-36
Tilting the sunroof....4-36
Closing the sunroof....4-37
Resetting the sunroof....4-38
Steering wheel....4-39
Electronic Power Steering (EPS)....4-39
Tilt & telescopic steering....4-40
Heated steering wheel....4-41
Horn....4-41
FLEX STEER....4-42
Mirrors....4-43
Inside rearview mirror....4-43
Outside rearview mirror....4-44
Instrument cluster....4-47
Instrument Cluster Control....4-47
LCD Display Control....4-48
Gauges....4-49
Transaxle Shift Indicator....4-53
LCD display....4-56
LCD Modes (for type B cluster)....4-56
Service mode....4-57
User settings mode....4-58
Turn By Turn Mode....4-60

Warning messages 4-60
Trip computer 4-64
Overview 4-64
Trip A/B (for Type A cluster) 4-66
Fuel economy 4-67
Warning and indicator lights 4-69
Warning lights 4-69
Indicator lights 4-76
Rear parking assist system 4-80
Operation of the rear parking assist system 4-80
Non-operational conditions of rear parking assist system 4-81
Rear parking assist system precautions 4-82
Self-diagnosis 4-82
Parking assist system 4-84
Operation of the parking assist system 4-84
Non-operational conditions of parking assist system 4-87
Self-diagnosis 4-88
Smart parking assist system (SPAS) 4-90
Operating condition 4-91
Non-operating condition 4-91
How the system works 4-94
Additional instructions (messages) 4-98
System malfunction 4-99
Rearview camera 4-100
Lighting 4-101
Battery saver function 4-101
Headlamp delay function 4-101
Headlight (Headlamp) welcome function 4-101
Static bending light 4-101
Daytime running light 4-102
Lighting control 4-102
High-beam operation 4-104
Turn signals and lane change signals 4-105
Front fog light 4-105
Rear fog light 4-106
Headlight leveling device 4-106
Wipers and washers 4-108
AUTO (Automatic) control 4-109
Windshield wipers 4-110
Windshield washers (front) 4-111
Rear window wiper and washer switch 4-113
Interior light 4-114
Interior lamp AUTO cut 4-114
Map lamp 4-114
Room lamp 4-115
Vanity mirror lamp 4-115
Luggage room lamp 4-116
Welcome system 4-117
Headlamp welcome 4-117
Interior light 4-117
Puddle lamp 4-117
Defroster 4-118
Rear window defroster 4-118
Climate control system 4-120
System operation 4-120
Air conditioning 4-120
Climate control air filter 4-122
Checking the amount of air conditioner refrigerant and compressor lubricant 4-122

Manual climate control system 4-124
Automatic climate control system 4-130
Windshield defrosting and defogging..... 4-139
Manual climate control system..... 4-139
Automatic climate control system..... 4-140
Clean air 4-143
Storage compartment..... 4-144
Center console storage..... 4-144
Glove box..... 4-144
Cool box 4-145
Sunglass holder 4-145
Luggage tray..... 4-146
Floor under tray 4-146
Interior features..... 4-147
Cigarette lighter 4-147
Ashtray 4-147
Cup holder..... 4-148
Bottle holder..... 4-149
Seat warmer 4-150
Air ventilation seat 4-151
Sunvisor..... 4-152
Seatback table 4-153
Power outlet..... 4-154
AUX, USB and iPod®..... 4-155
Coat hook..... 4-155
Floor mat anchor(s) 4-156
Luggage net (holder) 4-156
Cargo security screen 4-157
Portable lamp usage 4-159
Side curtain 4-160
Exterior features..... 4-161
Roof rack 4-161

KEYS

Record your key number



The key code number is stamped on the key code tag attached to the key set.

Should you lose your keys, Kia recommends to contact an authorized Kia dealer/service partner. Remove the key code tag and store it in a safe place. Also, record the key code number and keep it in a safe and handy place, but not in the vehicle.

Key operations

- Used to start the engine.
- Used to lock and unlock the doors.

⚠ WARNING

Kia recommends to use parts for replacement from an authorized Kia dealer/service partner. If an aftermarket key is used, the ignition switch may not return to ON after START. If this happens, the starter will continue to operate causing damage to the starter motor and
(Continued)

(Continued)

possible fire due to excessive current in the wiring.

⚠ WARNING

■ Ignition key (Smart key)

Leaving children unattended in a vehicle with the ignition key (smart key) is dangerous even if the key is not in the ignition switch or start button is ACC or ON position.
Children copy adults and they could place the key in the ignition switch or press the start button. The ignition key (smart key) would enable children to operate power windows or other controls, or even make the vehicle move, which could result in serious bodily injury or even death. Never leave the keys in your vehicle with unsupervised children, when the engine is running.

Immobilizer system (if equipped)

Your vehicle may be equipped with an electronic engine immobilizer system to reduce the risk of unauthorized vehicle use.
Your immobilizer system is comprised of a small transponder in the key and electronic devices inside the vehicle.

Vehicles without smart key system

With the immobilizer system, whenever you insert your ignition key into the ignition switch and turn it to ON, it checks and determines and verifies if the ignition key is valid or not.
If the key is valid, the engine will start.
If the key is invalid, the engine will not start.

To deactivate the immobilizer system:

Insert the ignition key into the key cylinder and turn it to the ON position.

To activate the immobilizer system:

Turn the ignition key to the OFF position. The immobilizer system activates automatically. Without a valid ignition key for your vehicle, the engine will not start.

Vehicles with smart key system

Whenever the engine start/stop button is changed to the ON position, the immobilizer system checks and verifies if the key is valid or not.
If the key is valid, the engine will start.
If the key is invalid, the engine will not start.

To deactivate the immobilizer system:

Change the engine start/stop button to the ON position.

To activate the immobilizer system:

Change the engine start/stop button to the OFF position. The immobilizer system activates automatically. Without a valid smart key for your vehicle, the engine will not start.

⚠ WARNING

In order to prevent theft of your vehicle, do not leave spare keys anywhere in your vehicle. Your immobilizer password is a customer unique password and should be kept confidential. Do not leave this number anywhere in your vehicle.

✻ NOTICE

When starting the engine, do not use the key with other immobilizer keys around. Otherwise the engine may not start or may stop soon after it starts. Keep each key separate in order to avoid a starting malfunction.

⚠ CAUTION

Do not put metal accessories near the ignition switch.
The engine may not start because the metal accessories may interrupt the transponder signal from normally transmitting.

✻ NOTICE

If you need additional keys or lose your keys, Kia recommends to visit an authorized Kia dealer/service partner.

⚠ CAUTION

The transponder in your ignition key is an important part of the immobilizer system. It is designed to give years of trouble-free service, however you should avoid exposure to moisture, static electricity and rough handling. Immobilizer system malfunction could occur.

⚠ CAUTION

Do not change, alter or adjust the immobilizer system because it could cause the immobilizer system to malfunction. In this case, have the system serviced by a professional workshop. Kia recommends to visit an authorized Kia dealer/service partner.
Malfunctions caused by improper alterations, adjustments or modifications to the immobilizer system are not covered by your vehicle manufacturer warranty.

REMOTE KEYLESS ENTRY (IF EQUIPPED)

Remote keyless entry system operations

■ Type A

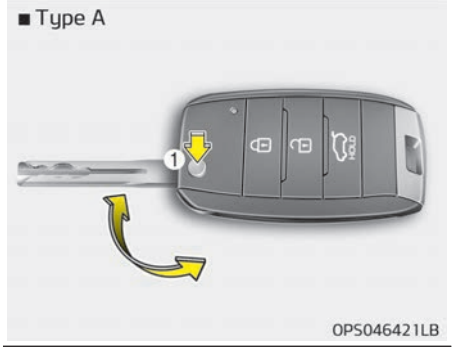

■ Type B

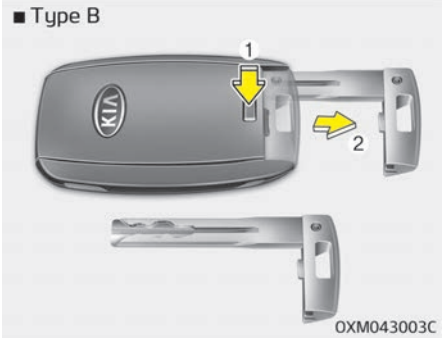

Type A

- To unfold the key, press the release button (1) then the key will unfold automatically.
- To fold the key, fold the key manually while pressing the release button.

⚠ CAUTION

Do not fold the key without pressing the release button. This may damage the key.

Type B

- To remove the mechanical key, press and hold the release button (1) and remove the mechanical key (2).
- To reinstall the mechanical key, put the key into the hole and push it until a click sound is heard.

Lock (1)

■ Type A



■ Type B



1. Close all doors.
2. Press the lock button.

3. The hazard warning light will blink once to indicate that all doors are locked (the engine hood and tailgate must be closed). Also, the outside rearview mirror will automatically fold if the outside rearview mirror folding switch (Type B) is in the AUTO position (if equipped).

✻ NOTICE

The doors will not lock if any door is opened.

Unlock (2)

1. Press the unlock button.
2. The hazard warning lights will blink twice to indicate that all doors are unlocked. Also, the outside rearview mirror will automatically unfold if the outside rearview mirror folding switch (Type B) is in the AUTO position (if equipped).

✻ NOTICE

After unlocking all doors, the doors will lock and the outside rearview mirror will unfold if the outside rearview mirror folding switch (Type B) is in the AUTO position (if equipped) unless a door is opened within 30 seconds.

Tailgate unlock (3)

1. Press the tailgate unlock button for more than 1 second.
2. The hazard warning light will blink twice to indicate the tailgate is unlocked.

✻ NOTICE

- After unlocking the tailgate, the tailgate will lock automatically unless it is opened within 30 seconds.

(Continued)

(Continued)

- Once the tailgate is opened and then closed, the tailgate will lock automatically.
- The word "HOLD" is written on the button to inform you that you must press and hold the button.

Transmitter precautions

✻ NOTICE

The transmitter will not work if any of following occur:

- The ignition key is in ignition switch.
- You exceed the operating distance limit (about 10 m [30 feet]).
- The battery in the transmitter is weak.
- Other vehicles or objects may be blocking the signal.
- The weather is extremely cold.

(Continued)

(Continued)

- The transmitter is close to a radio transmitter such as a radio station or an airport which can interfere with normal operation of the transmitter.
  When the transmitter does not work correctly, open and close the door with the ignition key. If you have a problem with the transmitter, Kia recommends to contact an authorized Kia dealer/service partner.
- If the transmitter is in close proximity to your cell phone or smart phone, the signal from the transmitter could be blocked by normal operation of your cell phone or smart phone. This is especially important when the phone is active such as making call, receiving calls, text messaging, and/or sending/receiving emails. Avoid placing the transmitter and your cell phone or smart phone in the same pants or jacket pocket and maintain adequate distance between the two devices.

⚠ CAUTION

Keep the transmitter away from water or any liquid. If the keyless entry system is inoperative due to exposure to water or liquids, it will not be covered by your manufacturer vehicle warranty.

⚠ CAUTION

Changes or modifications not expressly approved by the party responsible for compliance could void the user's authority to operate the equipment. If the keyless entry system is inoperative due to changes or modifications not expressly approved by the party responsible for compliance, it will not be covered by your manufacturer's vehicle warranty.

⚠ CAUTION

Keep the transmitter away from electromagnetic materials that
(Continued)

(Continued)

blocks electromagnetic waves to the key surface.

Battery replacement

A battery should last for several years, but if the transmitter or smart key is not working properly, try replacing the battery with a new one. If you are unsure how to use or replace the battery, Kia recommends to visit an authorized Kia dealer/service partner.

Type A



1. Insert a slim tool into the slot and gently pry open the transmitter cover.
2. Replace the battery with a new battery (CR2032). When replacing the battery, make sure the battery position.
3. Install the battery in the reverse order of removal.

Type B

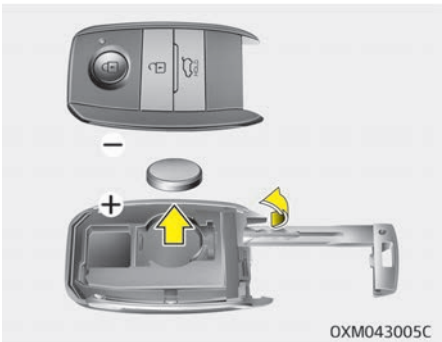

1. Pry open the rear cover of the smart key.
2. Replace the battery with a new battery (CR2032). When replacing the battery, make sure the battery position.
3. Install the battery in the reverse order of removal.

✻ NOTICE

- Using the wrong battery can cause the transmitter or smart key to malfunction. Be sure to use the correct battery.
- Circuits inside the transmitter or smart key may develop problems when dropped, exposed to moisture or static electricity.
- If you suspect that your transmitter or smart key might have sustained some damage, or you feel your transmitter or smart key is not working correctly, Kia recommends to visit an authorized Kia dealer/service partner.

(Continued)

(Continued)

- The transmitter or smart key is designed to give you years of trouble-free use, however it can malfunction if exposed to moisture or static electricity. If you are unsure how to use or replace the battery, Kia recommends to visit an authorized Kia dealer/service partner.

⚠ CAUTION

An inappropriately disposed battery can be harmful to the environment and human health.
Dispose the battery according to your local law(s) or regulation.

SMART KEY (IF EQUIPPED)

Smart key function



1. Door lock
2. Door unlock
3. Tailgate unlock

With a smart key, you can lock or unlock a door and tailgate and even start the engine without inserting the key.
The functions of the buttons on a smart key are similar to the remote keyless entry. Refer to the "Remote keyless entry" on page 4-06.
Carrying the smart key, you may lock and unlock the vehicle doors and tailgate.

Also, you may start the engine. Refer to the following, for more details.

Locking

1. Carry the smart key.
2. Close all doors.
3. Press the button of the outside door handle.
4. The hazard warning lights will blink once (the engine hood and tailgate must be closed). Also, the outside rearview mirror will automatically fold if the outside rearview mirror folding switch is in the AUTO position (if equipped).
5. Make sure that doors are locked by pulling the outside door handle.

✻ NOTICE

- The button will only operate when the smart key is within 0.7 m (28 in.) from the outside door handle.
- Even though you press the outside door handle button, the doors will not lock and the chime will sound

(Continued)

(Continued)

for 3 seconds if any of following occur:
- The smart key is in the vehicle.
- The engine start/stop button is in ACC or ON position.
- Any door except the tailgate is opened.

Unlocking

1. Carry the smart key.
2. Press the button of the front outside door handle.
3. All doors will unlock and the hazard warning lights will blink twice. Also, the outside rearview mirror will automatically unfold if the outside rearview mirror folding switch is in the AUTO position (if equipped).

✻ NOTICE

- The button will only operate when the smart key is within 0.7 m (28 in.) from the outside door handle.
- When the smart key is recognized in the area of 0.7 m (28 in.) from the front outside door handle, other people can also open the doors.
- After unlocking all doors, the doors will lock and the outside rearview mirror will unfold if the outside rearview mirror folding switch is in the AUTO position (if equipped) unless a door is opened within 30 seconds.

Tailgate unlocking

1. Carry the smart key.
2. Press the tailgate handle switch.
3. The tailgate will unlock.

✻ NOTICE

- Once the tailgate is opened and then closed, the tailgate will lock automatically.
- The button will only operate when the smart key is within 0.7 m (28 in.) from the tailgate handle.

Smart key precautions

✻ NOTICE

- If, for some reason, you happen to lose your smart key, you will not be able to start the engine. Tow the vehicle, if necessary, Kia recommends to visit an authorized Kia dealer/service partner.
- A maximum of 2 smart keys can be registered to a single vehicle. If you lose a smart key, Kia recommends to visit an authorized Kia dealer/service partner.

(Continued)

(Continued)

- The smart key will not work if any of the following occurs:
  - The smart key is close to a radio transmitter such as a radio station or an airport which can interfere with normal operation of the smart key.
  - The smart key is near a mobile two-way radio system or a cellular phone.
  - Another vehicle's smart key is being operated close to your vehicle.

  When the smart key does not work properly, open and close the door with the mechanical key. If you have a problem with the smart key, Kia recommends to visit an authorized Kia dealer/service partner.

(Continued)

(Continued)

- If the smart key is in close proximity to your cell phone or smart phone, the signal from the smart key could be blocked by normal operation of your cell phone or smart phone. This is especially important when the phone is active such as making call, receiving calls, text messaging, and/or sending/receiving emails. Avoid placing the smart key and your cell phone or smart phone in the same pants or jacket pocket and maintain adequate distance between the two devices.

⚠ CAUTION

Keep the smart key away from water or any liquid. If the keyless entry system is inoperative due to exposure to water or liquids, it will not be covered by your manufacturer's vehicle warranty.

⚠ CAUTION

Keep the smart key away from electromagnetic materials that blocks electromagnetic waves to the key surface.

Door lock/unlock in an emergency situation

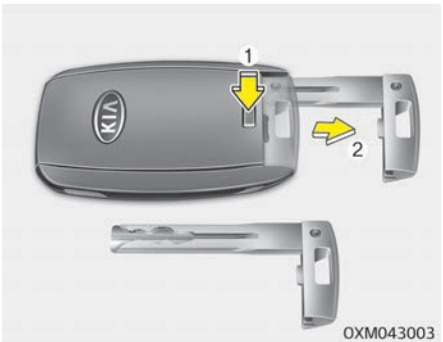

If the smart key does not operate normally, you can lock or unlock the doors by using the mechanical key.

1. Press and hold the release button (1) and remove the mechanical key (2).
2. Insert the key into the hole of the outside door handle. Turn the key toward the rear of the vehicle to unlock and toward the front of the vehicle to lock.
3. To reinstall the mechanical key, put the key into the hole and push it until a click sound is heard.

THEFT-ALARM SYSTEM (IF EQUIPPED)



Vehicles equipped with a theft alarm system will have a label attached to the vehicle with the following words:

1. WARNING
2. SECURITY SYSTEM

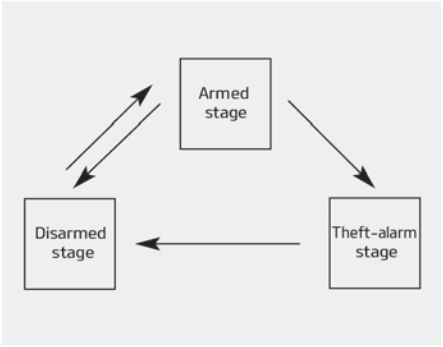

This system is designed to provide protection from unauthorized entry into the vehicle. This system is operated in three stages: the first is the "Armed" stage, the second is the "Theft-alarm" stage, and the third is the "Disarmed" stage. If triggered, the system provides an audible alarm with blinking of the hazard warning lights.

Armed stage

Using the smart key

Park the vehicle and stop the engine. Arm the system as described below.

1. Turn off the engine.
2. Make sure that all doors, the engine hood and tailgate are closed and latched.
3. • Lock the doors by pressing the button of the front outside door handle with the smart key in your possession.
   After completion of the steps above, the hazard warning lights will operate once to indicate that the system is armed.
   If the tailgate or engine hood remains opened, the hazard warning lights will not operate and theft-alarm will not arm. After this, if the tailgate and engine hood are closed, the hazard warning lights will blink once and the theft-alarm will arm.

- Lock the doors by pressing the lock button on the smart key.
  After completion of the steps above, the hazard warning lights will operate once to indicate that the system is armed.
  If the tailgate or engine hood remains opened, the hazard warning lights will not operate and theft-alarm will not arm. After this, if the tailgate and engine hood are closed, the hazard warning lights will blink once and the theft-alarm will arm.

Using the transmitter

Park the vehicle and stop the engine. Arm the system as described below.

1. Turn off the engine and remove the ignition key from the ignition switch.
2. Make sure that all doors, the engine hood and tailgate are closed and latched.
3. Lock the doors by pressing the lock button on the transmitter.
   After completion of the steps above, the hazard warning lights will blink once to indicate that the system is armed.
   If the tailgate or engine hood remains opened, the hazard warning lights will not operate and theft-alarm will not arm. After this, if the tailgate and engine hood are closed, the hazard warning lights will blink once and the theft-alarm will arm.

- **Do not arm the system until all passengers have left the vehicle. If the system is armed while a passenger(s) remains in the vehicle, the alarm may be activated when the remaining passenger(s) leave the vehicle. If any door, tailgate or engine hood is opened within 30 seconds after entering the armed stage, the system is disarmed to prevent unnecessary alarm.**

Theft-alarm stage

The alarm will be activated if any of the following occurs while the system is armed.

- A front or rear door is opened without using transmitter or smart key.
- The tailgate is opened without using transmitter or smart key.
- The engine hood is opened.

The siren will sound and the hazard warning lights will blink continuously for 27 seconds, unless the system is disarmed. To turn off the system, unlock the doors with the transmitter or smart key.

Disarmed stage

The system will be disarmed when:

Transmitter

- The door unlock button is pressed.
- The engine is started.
- The ignition switch is in the “ON” position for 30 seconds or more.

Smart key

- The door unlock button is pressed.
- The button of the front outside door is pressed while carrying the smart key.
- The engine is started.

After the doors are unlocked, the hazard warning lights will blink twice to indicate that the system is disarmed.

After pressing the unlock button, if any door (or tailgate) is not opened within 30 seconds, the system will be re-armed.

✻ NOTICE

- Without smart key system
  If the system is not disarmed with the transmitter, insert the key into the ignition switch and start the engine. Then the system will be disarmed.
- With smart key system
  If the system is not disarmed with the smart key, open the door with the mechanical key and start the engine. Then the system will be disarmed.
- If you lose your keys, Kia recommends to visit an authorized Kia dealer/service partner.

⚠ CAUTION

Do not change, alter or adjust the theft-alarm system because it could cause the theft-alarm system to malfunction have the system serviced by a professional workshop. Kia recommends to visit an authorized Kia dealer/service partner.
Malfunctions caused by improper alterations, adjustments or modifications to the theft-alarm system are not covered by your vehicle manufacturer warranty.

DOOR LOCKS

Operating door locks from outside the vehicle

Transmitter/Smart key

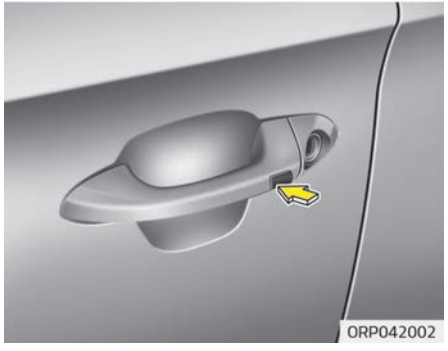

- Doors can be locked and unlocked with the transmitter or smart key.
- Doors can be locked and unlocked by pressing the button of the outside door handle with the smart key in your possession. (vehicles equipped with smart key system)
- Once the doors are unlocked, they may be opened by pulling the door handle.
- When closing the door, push the door by hand. Make sure that doors are closed securely.

Mechanical key

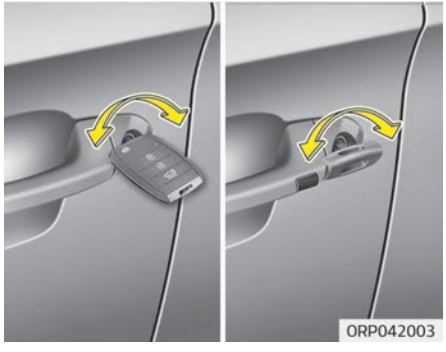

- If the transmitter or smart key does not operate normally, you can lock or unlock the doors by the mechanical key.
  Insert the key into the key hole of the outside door handle. Turn the key toward the rear of the vehicle to unlock and toward the front of the vehicle to lock.
- If you lock/unlock the driver's door with a key while the power door lock switch does not operate normally, only the driver's door will lock/unlock.
- Once the door is unlocked, it may be opened by pulling the door handle.
- When closing the door, push the door by hand. Make sure that doors are closed securely.

✻ NOTICE

- In cold and wet climates, door lock and door mechanisms may not work properly due to freezing conditions.
- If the door is locked/unlocked multiple times in rapid succession with either the vehicle key or door lock switch, the system may stop operating temporarily in order to protect the circuit and prevent damage to system components.

⚠ WARNING

- **If you don't close the door securely, the door may open again.**
- **Be careful that someone's body and hands are not trapped when closing the door.**

⚠ WARNING

If people must spend a longer time in the vehicle while it is very hot or cold outside, there is risk of injuries or danger to life. Do not lock the vehicle from the outside when there are people in it.

⚠ CAUTION

Do not frequently repeat opening and closing of doors, or apply excessive force to a door while the door closer is operating.

In case of an emergency

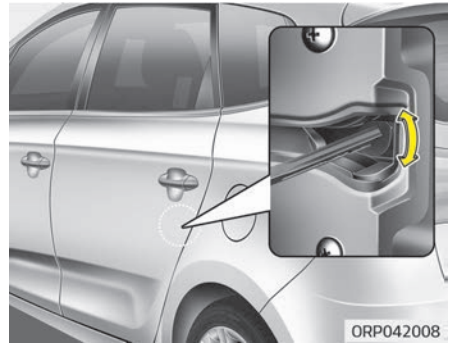

If the power door lock switch does not operate electrically, the only way to lock the door(s) is with the mechanical key from the outside key hole.
You can lock the doors without the outside key hole as follows:

1. Open the door.
2. Insert the key into the emergency door lock hole and turn the key horizontally to lock.
3. Close the door securely.

Operating door locks from inside the vehicle

With the door handle (Type A)



Driver's door and front passenger's door (if equipped)

If the inner door handle is pulled when the door is locked, the door will unlock and open.

Rear door (if equipped)

If the inner door handle is pulled once when the door is locked, the door will unlock.
If the inner door handle is pulled once more, the door will open.

With the door handle (Type B)



- To unlock a door, push the door lock button (1) to the "Unlock (A)" position. The red mark (2) on the button will be visible.
- To lock a door, push the door lock button (1) to the "Lock (B)" position. If the door is locked properly, the red mark (2) on the door lock button will not be visible.
- To open a door, pull the door handle (3) outward.
- If the inner door handle of the driver's (or front passenger's) door is pulled when the door lock button is in the lock position, the button will unlock and the door will open. (if equipped)
- Front door cannot be locked if the ignition key is in the ignition switch (or if the smart key is in the vehicle) and the front door is opened.

⚠ WARNING

Do not pull the inner door handle of driver's (or passenger's) door while the vehicle is moving.

With central door lock/unlock switch

Type A

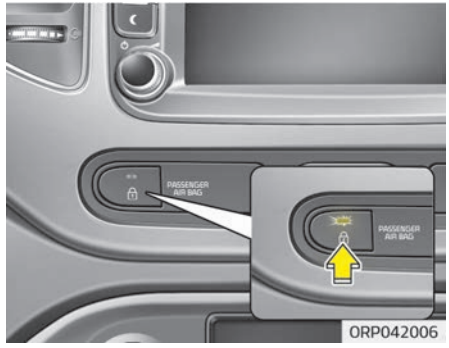

It is operated by pressing the door lock/unlock switch.

- When you press the central door lock switch, all vehicle doors will lock and the indicator light on the switch will illuminate.
- If any door is opened when the switch is pressed, all doors will not lock.
- If any door is unlocked, the indicator of the central door lock switch will go off.

- When you press the central door unlock switch, all vehicle doors will unlock.

✻ NOTICE

Once the doors are locked with the transmitter or smart key, the doors cannot be unlocked with the central door lock/unlock switch. (if equipped)

Type B



Operate by pressing the central door lock switch.

- When pressing the front portion (1) of the switch, all vehicle doors will lock.
- When pressing the rear portion (2) of the switch, all vehicle doors will unlock.
- If the key is in the ignition switch (or if the smart key is in the vehicle) and any door is opened, the doors will not lock even though the front portion (1) of the central door lock switch is pressed.

⚠ WARNING

■ Door lock malfunction

If a power door lock ever fails to function while you are in the vehicle, try one or more of the following:

- **Operate the other door locks and handles.**
- **Lower the driver's window and use the key to unlock the door from outside.**
- **Move to the cargo area and open the tailgate.**

⚠ WARNING

■ Doors

- **The doors should always be fully closed and locked while the vehicle is in motion to prevent accidental opening of the door. Locked doors will also discourage potential intruders when the vehicle stops or slows down.**
- **Be careful when opening doors and watch for vehicles, motorcycles, bicycles or pedestrians approaching the vehicle in the path of the door. Opening a door when something is approaching can cause damage or injury.**

⚠ WARNING

■ Unlocked vehicles

Leaving your vehicle unlocked can invite theft or possible harm to you or others from someone hiding in your vehicle while you are gone. Always remove the ignition key, engage the parking brake, close all windows and

(Continued)

(Continued)

lock all doors when leaving your vehicle unattended.

⚠ WARNING

■ Unattended children

An enclosed vehicle can become extremely hot, causing death or severe injury to unattended children or animals who cannot escape the vehicle. Furthermore, children might operate features of the vehicle that could injure them, or they could encounter other harm, possibly from someone gaining entry to the vehicle. Never leave children or animals unattended in your vehicle.

Deadlocks (if equipped)

Some vehicles are equipped with a deadlock system. Deadlocks prevent opening of a door from either inside or outside the vehicle once the deadlocks have been activated providing an additional measure of vehicle security.

To lock the vehicle using the deadlock function, the doors must be locked by using the transmitter or smart key. To unlock the vehicle, the transmitter or smart key must be used again.

⚠ WARNING

Do not lock the doors with the transmitter or the smart key with anybody left in the vehicle. The passenger in the vehicle cannot unlock the doors with the door lock button. For example, if the door is locked with the transmitter, the passenger in the vehicle cannot unlock the door without the transmitter.

Door lock/unlock features

Impact sensing door unlock system

All doors will automatically unlock when an impact causes the air bags to deploy.

Speed sensing door lock system (if equipped)

All doors will automatically lock after the vehicle speed exceeds 15 km/h.

Engine off door unlock system (if equipped)

All doors will automatically unlock:

Without smart key system

When the key is removed from the ignition switch.

With smart key system

When the engine start/stop button is in the OFF position.

Shift lever door lock/unlock system

- All doors will automatically lock when the shift lever is moved out of P (Park).
- All doors will automatically unlock when the shift lever is moved into P (Park).

You can activate or deactivate the auto door lock/unlock features in the vehicle. Refer to “User setting” on page 4-58.

Child-protector rear door lock

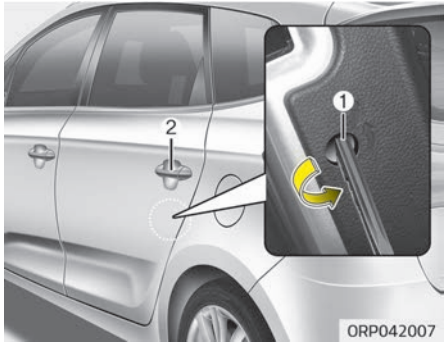

The child safety lock is provided to help prevent children from accidentally opening the rear doors from inside the vehicle. The rear door safety locks should be used whenever children are in the vehicle.

1. Open the rear door.
2. Insert a key (or screwdriver) into the hole (1) and turn it to the "lock ( )" position. When the child safety lock is in the lock position, the rear door will not open even though the inner door handle is pulled inside the vehicle.
3. Close the rear door.

To open the rear door, pull the outside door handle (2).
Even though the doors may be unlocked, the rear door will not open by pulling the inner door handle until rear door child safety lock is unlocked.

⚠ WARNING

■ Rear door locks

If children accidentally open the rear doors while the vehicle is in motion, they could fall out and be severely injured or killed. To prevent children from opening the rear doors from the inside, the rear door safety locks should be used whenever children are in the vehicle.

TAILGATE

Opening the tailgate

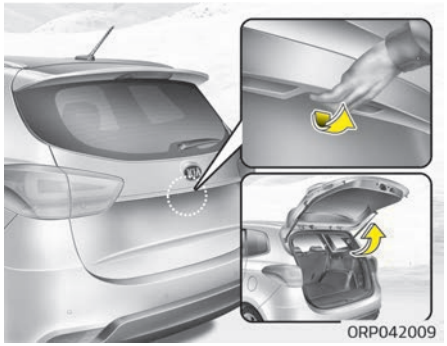

- The tailgate is locked or unlocked when all doors are locked or unlocked with the key, transmitter, smart key or central door lock/unlock switch.
- Only the tailgate is unlocked if the tailgate unlock button on the transmitter or smart key is pressed for approximately 1 second or the tailgate handle switch is pressed with the smart key in your possession.
- If unlocked, the tailgate can be opened by pressing the handle and pulling it up.
- Once the tailgate is opened and then closed, the tailgate locks automatically. (All doors must be locked.)

✻ NOTICE

In cold and wet climates, door lock and door mechanisms may not work properly due to freezing conditions.

⚠ WARNING

The tailgate swings upward. Make sure no objects or people are near the rear of the vehicle when opening the tailgate.

⚠ CAUTION

Make certain that you close the tailgate before driving your vehicle. Possible damage may occur to the tailgate lift cylinders and attaching hardware if the tailgate is not closed prior to driving.

Closing the tailgate



Lower and push down the tailgate firmly. Make sure that the tailgate is securely latched.

⚠ WARNING

Make sure your hands, feet and other parts of your body are safely out of the way before closing the tailgate.

⚠ CAUTION

Make sure nothing is near the tailgate latch and striker while closing the tailgate. It may damage the tailgate's latch.

⚠ WARNING

■ Exhaust fumes

If you drive with the tailgate opened, you will draw dangerous exhaust fumes into your vehicle which can cause serious injury or death to vehicle occupants.
If you must drive with the tailgate opened, keep the air vents and all windows open so that additional outside air comes into the vehicle.

⚠ WARNING

■ Rear cargo area

Occupants should never ride in the rear cargo area where no restraints are available. To avoid injury in the
(Continued)

(Continued)

event of an accident or sudden stops, occupants should always be properly restrained.

Emergency tailgate safety release



Your vehicle is equipped with the emergency tailgate safety release lever located on the bottom of the tailgate. When someone is inadvertently locked in the luggage compartment. The tailgate can be opened by doing as follows:

1. Remove the cover.
2. Push the release lever to the right.
3. Push up the tailgate.

⚠ WARNING

- **For emergencies, be fully aware of the location of the emergency tailgate safety release lever in the vehicle and how to open the tailgate if you are accidentally locked in the luggage compartment.**
- **No one should be allowed to occupy the luggage compartment of the vehicle at any time. The luggage compartment is a very dangerous location in the event of a crash.**
- **Use the release lever for emergencies only. Use with extreme caution, especially while the vehicle is in motion.**

WINDOWS

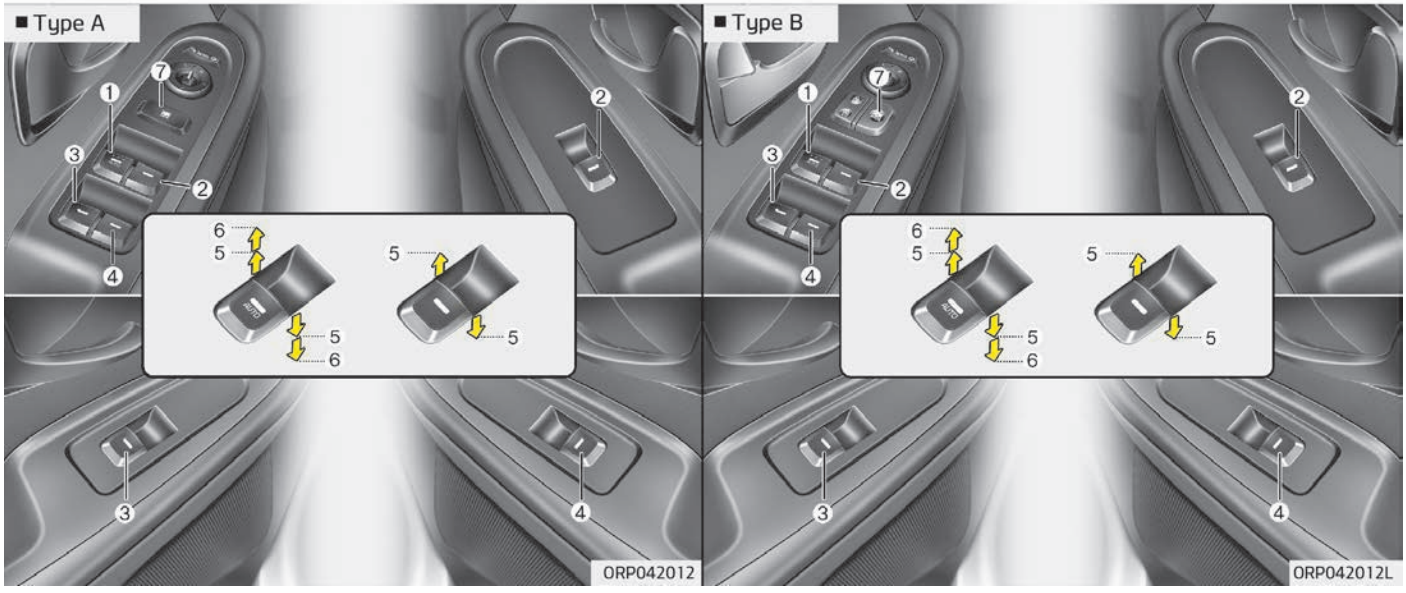

1. Driver's door power window switch
2. Front passenger's door power window switch
3. Rear door (left) power window switch*
4. Rear door (right) power window switch*
5. Window opening and closing

*: if equipped

6. Automatic power window up*/down*
7. Power window lock switch*

✻ NOTICE

In cold and wet climates, power windows may not work properly due to freezing conditions.

*: if equipped

Power windows

The ignition switch must be in the ON position for power windows to operate. Each door has a power window switch that controls the door's window. The driver's door has a master power window switch that controls all the windows in the vehicle. Also, the driver has a power window lock switch which can block the operation of rear passenger windows.

The power windows can be operated for approximately 30 seconds after the ignition key is removed or turned to the ACC or LOCK position. However, if the front doors are opened, the power windows cannot be operated even within the 30 seconds period. If the window cannot be closed because it is blocked by objects, remove the objects and close the window.

✻ NOTICE

While driving with the rear windows down or with the sunroof (if equipped) in an open (or partially open position), your vehicle may demon-

(Continued)

(Continued)

strate a wind buffeting or pulsation noise. This noise is a normal occurrence and can be reduced or eliminated by taking the following actions. If the noise occurs with one or both of the rear windows down, partially lower both front windows approximately one inch. If you experience the noise with the sunroof open, slightly reduce the size of the sunroof opening.

⚠ WARNING

Do not install any accessories in the area of windows. It may impact jam protection.

Window opening and closing

Type A

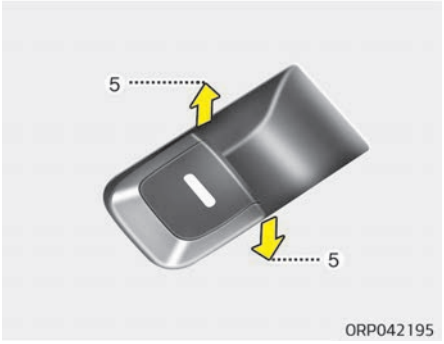

To open or close a window, press down or pull up the front portion of the corresponding switch to the first detent position (5).

Type B - Auto up/down window (if equipped)



Pressing or pulling up the power window switch momentarily to the second detent position (6) completely lowers or raises the window even when the switch is released. To stop the window at the desired position while the window is in operation, pull up or press down and release the switch.

✻ NOTICE

If the power window does not operate normally, the automatic power window system must be reset as follows:

1. Turn the ignition switch to the ON position.
2. Close the window and continue pulling up the power window switch for at least 1 second after the window is completely closed.

Automatic reversal (for Type B windows, if equipped)

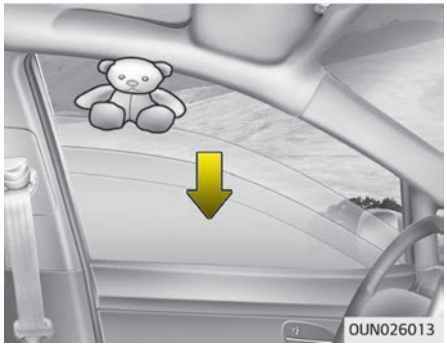

If the upward movement of the window is blocked by an object or part of the body, the window will detect the resistance and will stop upward movement. The window will then lower approximately 30 cm (11.8 in.) to allow the object to be cleared.

If the window detects the resistance while the power window switch is pulled up continuously, the window will stop upward movement then lower approximately 2.5 cm (1 in.). And if the power window switch is pulled up continuously again within 5 seconds after the window is lowered by the automatic window reversal feature, the automatic window reversal will not operate.

✻ NOTICE

The automatic reverse feature is only active when the "auto up" feature is used by fully pulling up the switch. The automatic reverse feature will not operate if the window is raised using the halfway position on the power window switch.

⚠ WARNING

Always check for obstructions before raising any window to avoid injuries or vehicle damage. If an object less than 4 mm (0.16 in.) in diameter is caught between the window glass

(Continued)

(Continued)

and the upper window channel, the automatic reverse window may not detect the resistance and will not stop and reverse direction.

⚠ WARNING

The automatic reverse feature doesn't activate while resetting power window system. Make sure body parts or other objects are safely out of the way before closing the windows to avoid injuries or vehicle damage.

Power window lock button

■ Type A



ORP042014

■ Type B



ORP042014L

The driver can disable the power window switches on the rear passenger's doors by pressing the power window lock switch to the lock position (pressed).
When the power window lock switch is pressed:

- The driver's master control can operate all the power windows.
- The front passenger's control can operate the front passenger's power window.
- The rear passenger's control cannot operate the rear passenger's power window.

⚠ CAUTION

- **To prevent possible damage to the power window system, do not open or close two windows or more at the same time. This will also ensure the longevity of the fuse.**

(Continued)

(Continued)

- **Never try to operate the main switch on the driver's door and the individual door window switch in opposing directions at the same time. If this is done, the window will stop and cannot be opened or closed.**

⚠ WARNING

■ Windows

- **NEVER leave the key in the vehicle with unsupervised children, when the engine is running.**
- **NEVER leave any child unattended in the vehicle. Even very young children may inadvertently cause the vehicle to move, entangle themselves in the windows, or otherwise injure themselves or others.**
- **Always double check to make sure all arms, hands, head and other obstructions are safely out of the way before closing a window.**

(Continued)

(Continued)

- **Do not allow children to play with the power windows. Keep the driver's door power window lock switch in the LOCK position (pressed). Serious injury can result from unintentional window operation by the child.**
- **Do not extend face or arms outside the window while driving.**

HOOD

Opening the hood

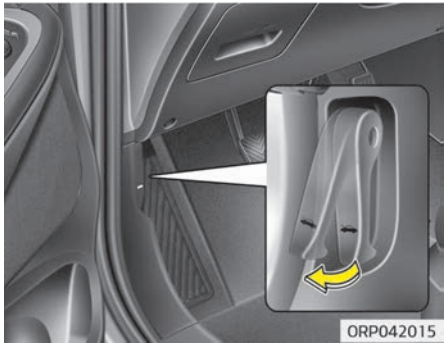

1. Pull the release lever to unlatch the hood. The hood should pop open slightly.

⚠ WARNING

Open the hood after turning off the engine on a flat surface, shifting the shift lever to the P (Park) position for automatic transaxle/dual clutch transmission and to the 1 (First) gear or R (Reverse) for manual
(Continued)

(Continued)

transaxle, and setting the parking brake.

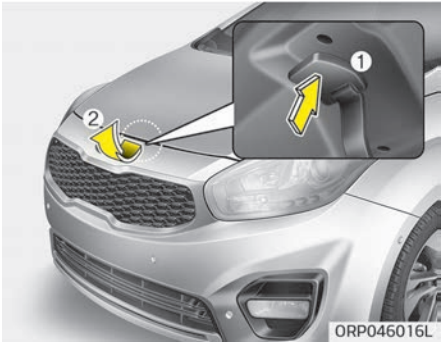

2. Go to the front of the vehicle, raise the hood slightly, pull up the secondary latch (1) inside of the hood center and lift the hood (2).



3. Pull out the support rod.
4. Hold the hood opened with the support rod.

⚠ WARNING

■ Hot parts

Be very careful not to touch the support rod when the engine and parts are hot. You could get burned or get seriously injured.

Closing the hood

1. Before closing the hood, check the following:

- All filler caps in engine compartment must be correctly installed.
- Gloves, rags or any other combustible material must be removed from the engine compartment.

2. Return the support rod to its clip to prevent it from rattling.
3. Lower the hood until it is about 30 cm above the closed position and let it drop. Make sure that it locks into place.
4. Check that the hood has engaged properly. If the hood can be raise slightly, it is not properly engaged. Open it again and close it with a little more force.

⚠ WARNING

■ Hood

- **Before closing the hood, ensure that all obstructions are removed from the hood opening. Closing the hood with an obstruction present in the hood opening may result in property damage or severe personal injury.**

(Continued)

(Continued)

- **Do not leave gloves, rags or any other combustible material in the engine compartment. Doing so may cause a heat-induced fire.**

⚠ WARNING

- **Always double check to be sure that the hood is firmly latched before driving away. If it is not latched, the hood could fly open while the vehicle is being driven, causing a total loss of visibility, which might result in an accident.**
- **The support rod must be inserted completely into the hole whenever you inspect the engine compartment. This will prevent the hood from falling and possibly injuring you.**
- **Do not move the vehicle with the hood raised. The view will be blocked and the hood could fall or be damaged.**

⚠ WARNING



When you check the engine compartment, please make sure your head is not injured by the hood safety hook which is located inside of the hood.

FUEL FILLER LID

Opening the fuel filler lid

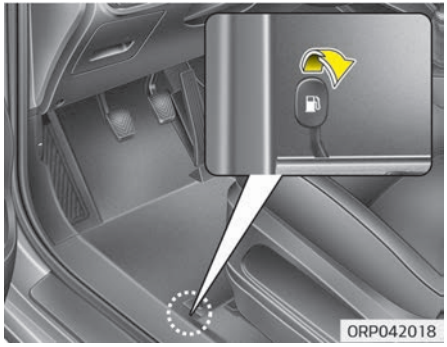

The fuel-filler lid must be opened from inside the vehicle by pulling up on the fuel-filler lid opener located on the front floor area on the driver's seat.

✻ NOTICE

If the fuel filler lid will not open because ice has formed around it, tap lightly or push on the lid to break the ice and release the lid. Do not pry on

(Continued)

(Continued)

the lid. If necessary, spray around the lid with an approved de-icer fluid (do not use radiator anti-freeze) or move the vehicle to a warm place and allow the ice to melt.

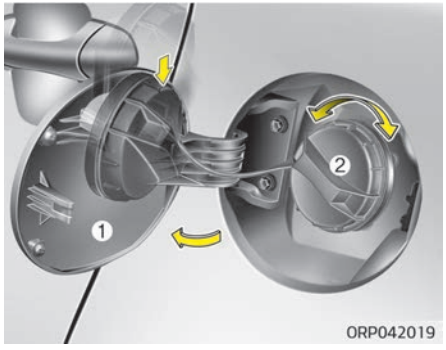

1. Stop the engine.
2. To open the fuel filler lid, pull up the fuel filler lid opener.
3. Pull the fuel filler lid (1) out to fully open.
4. To remove the cap, turn the fuel tank cap (2) counterclockwise.
5. Refuel as needed.

Closing the fuel filler lid

1. To install the cap, turn it clockwise until it "clicks". This indicates that the cap is securely tightened.
2. To close the lid, press the edge of the lid. Make sure it is securely closed.

✻ NOTICE

When refueling fully at an up hill, the fuel gauge may not point to the 1 (or F) position.
It is not a malfunction. If you move your vehicle to a level ground, the fuel gauge will move to the full position.

⚠ WARNING

■ Refueling
(Continued)

(Continued)

- If pressurized fuel sprays out, it can cover your clothes or skin and thus subject you to the risk of fire and burns. Always remove the fuel cap carefully and slowly. If the cap is venting fuel or if you hear a hissing sound, wait until the condition stops before completely removing the cap.
- Do not "top off" after the nozzle automatically shuts off when refueling.
- Always check that the fuel cap is installed securely to prevent fuel spillage in the event of an accident.

⚠ WARNING

■ Refueling dangers

Automotive fuels are flammable materials. When refueling, please note the following guidelines carefully. Failure to follow these guidelines may result in severe personal injury,

(Continued)

(Continued)

severe burns or death by fire or explosion.

- Read and follow all warning posted at the gas station facility.
- Before refueling note the location of the Emergency Gasoline Shut-Off, if available, at the gas station facility.
- Before touching the fuel nozzle, you should eliminate potentially dangerous static electricity discharge by touching another metal part of the vehicle, a safe distance away from the fuel filler neck, nozzle, or other gas source.

(Continued)

(Continued)

- Do not get back into a vehicle once you have begun refueling since you can generate static electricity by touching, rubbing or sliding against any item or fabric (polyester, satin, nylon, etc.) capable of producing static electricity. Static electricity discharge can ignite fuel vapors resulting in rapid burning. If you must reenter the vehicle, you should once again eliminate potentially dangerous static electricity discharge by touching a metal part of the vehicle, away from the fuel filler neck, nozzle or other gasoline source.
- When using an approved portable fuel container, be sure to place the container on the ground prior to refueling. Static electricity discharge from the container can ignite fuel vapors causing a fire. Once refueling has begun, contact with the vehicle should be maintained until the filling is complete.
  Use only portable plastic fuel containers designed to carry and store gasoline.

(Continued)

(Continued)

- **Do not use cellular phones while refueling. Electric current and/or electronic interference from cellular phones can potentially ignite fuel vapors causing a fire.**
- **When refueling, always shut the engine off. Sparks produced by electrical components related to the engine can ignite fuel vapors causing a fire. Once refueling is complete, check to make sure the filler cap and filler door are securely closed, before starting the engine.**
- **DO NOT use matches or a lighter and DO NOT SMOKE or leave a lit cigarette in your vehicle while at a gas station especially during refueling. Automotive fuel is highly flammable and can, when ignited, result in fire.**
- **If a fire breaks out during refueling, leave the vicinity of the vehicle, and immediately contact the manager of the gas station and then contact the local fire department. Follow any safety instructions they provide.**

⚠ CAUTION

- **Make sure to refuel your vehicle according to "Fuel requirements" on page 1-03.**
- **If the fuel filler cap requires replacement, please make sure that you use parts designed for replacement in your vehicle. An incorrect fuel filler cap can result in a serious malfunction of the fuel system or emission control system. For more detailed information, Kia recommends to visit an authorized Kia dealer/service partner.**
- **Do not spill fuel on the exterior surfaces of the vehicle. Any type of fuel spilled on painted surfaces may damage the paint.**
- **After refueling, make sure the fuel cap is installed securely to prevent fuel spillage in the event of an accident.**

PANORAMA SUNROOF (IF EQUIPPED)



If your vehicle is equipped with a sunroof, you can slide or tilt your sunroof with the sunroof control lever located on the overhead console.
The sunroof can only be opened, closed, or tilted when the ignition switch is in the ON position.

- In cold and wet climates, the sunroof may not work properly due to freezing conditions.
- After the vehicle is washed or in a rainstorm, be sure to wipe off any water that is on the sunroof before operating it.

⚠ CAUTION

■ Sunroof control lever

Do not continue to move the sunroof control lever after the sunroof is fully opened, closed, or tilted. Damage to the motor or system components could occur.

⚠ WARNING

- **In order to prevent accidental operation of the sunroof, especially by a child, do not let a child operate the sunroof.**
- **Do not sit on the top of the vehicle. It may cause vehicle damage.**

Sunroof open warning (if equipped)



If the driver removes the ignition key (smart key: turns off the engine) and opens the driver-side door when the sunroof is not fully closed, the warning chime will sound for approximately 7 seconds and a warning message will appear on the LCD display.
Close the sunroof securely when leaving your vehicle.

Sunshade



- To open the sunshade, press the sunshade control switch (1).
- To close the sunshade when the sunroof glass is closed.
  - Press the sunshade control switch (2).

❈ When you press the sunshade close button (2) with the sunroof glass opened, the sunshade and sunroof glass will be closed.

To stop the sliding at any point, press the sunshade control switch momentarily.

❈ Only the front glass of the panorama sunroof opens and closes.

Sliding the sunroof

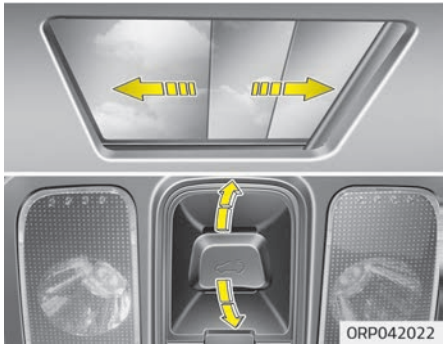

When the sunshade is closed

If you pull the sunroof control lever backward, the sunshade will slide all the way open then the sunroof glass will slide all the way open. To stop the sunroof movement at any point, pull or push the sunroof control lever momentarily.

When the sunshade is opened

If you pull the sunroof control lever backward, the sunroof glass will slide all the way open. To stop the sunroof movement at any point, pull or push the sunroof control lever momentarily.

Tilting the sunroof

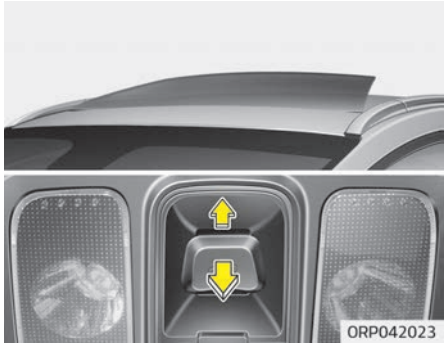

When the sunshade is closed

If you push the sunroof control lever upward, the sunshade will slide all the way open then the sunroof glass will tilt.
To stop the sunroof movement at any point, pull or push the sunroof control lever momentarily.

When the sunshade is opened

If you push the sunroof control lever upward, the sunroof glass will tilt.
To stop the sunroof movement at any point, pull or push the sunroof control lever momentarily.

Closing the sunroof

To close the sunroof glass with the sunshade

Push the sunroof control lever forward. The sunroof glass will close and then the sunshade will close automatically.
To stop the sunroof movement at any point, pull or push the sunroof control lever momentarily.

Automatic reversal

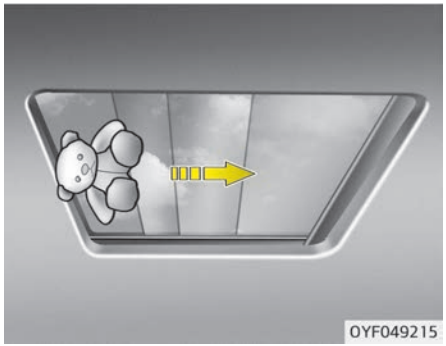

If an object or part of the body is detected while the sunroof glass or sunshade is closing automatically, it will reverse the direction, and then stop.
The auto reverse function does not work if a tiny obstacle is between the sliding glass or sunshade and the sunroof sash. You should always check that all passengers and objects are away from the sunroof before closing it.
Objects less than 4mm (0.16 inch) in diameter caught between the sunroof glass and the front glass channel may not be detected by the automatic reverse glass and the glass will not stop and reverse direction.

⚠ WARNING

■ Sunroof

- **Be careful that someone's head, hands and body are not trapped by a closing sunroof.**
- **Do not extend the face, neck, arms or body outside through an opened sunroof while driving.**
- **Make sure your hands and face are safely out of the way before closing a sunroof.**
- **A panorama sunroof is made of glass, therefore it may break in an accident. If you do not have your seat belt on, you may stick out of the broken glass and get injured or killed. For all passengers safety, have an appropriate protection on. (ex. seat belt, CRS, etc.)**

⚠ CAUTION

- **Periodically remove any dirt that may accumulate on the guide rail.**

(Continued)

(Continued)

- **If you try to open the sunroof when the temperature is below freezing or when the sunroof is covered with snow or ice, the glass or the motor could be damaged.**
- **If you drive with the sunroof opened right after a vehicle wash or rain, water may get inside the vehicle.**

Resetting the sunroof

Whenever the vehicle battery is disconnected or discharged, or related fuse is blown, you must reset your sunroof system as follows:

1. Start the engine.
2. Close the sunroof completely if opened.
3. Release the sunroof control lever.
4. Push the sunroof control lever forward in the direction of close (about 10 seconds) until the sunshade open and sunroof glass tilts. Then, release the lever.
5. Within 3 seconds, push the sunroof control lever forward in the direction of close, until the sunroof operates as follows again:
   The sunroof glass slides open ➟
   The sunroof glass slides close ➟
   The sunshade closes
   Then, release the lever.
   When this is complete, the sunroof system is reset.

For more detailed information, Kia recommends to contact an authorized Kia dealer/service partner.

✻ NOTICE

If you do not reset the sunroof, it may not work properly.

Electronic Power Steering (EPS)

Power steering uses the motor to assist you in steering the vehicle. If the engine is off or if the power steering system becomes inoperative, the vehicle may still be steered, but it will require increased steering effort.
The motor driven power steering is controlled by the power steering control unit which senses the steering wheel torque and vehicle speed to command the motor.
The steering wheel becomes heavier as the vehicle's speed increases and becomes lighter as the vehicle's speed decreases for better control of the steering wheel.
Should you notice any change in the effort required to steer during normal vehicle operation, have the system checked by a professional workshop. Kia recommends to visit an authorized Kia dealer/service partner.

✻ NOTICE

The following symptoms may occur during normal vehicle operation:

(Continued)

(Continued)

- The EPS warning light does not illuminate.
- The steering effort is high immediately after turning the ignition switch on. This happens as the system performs the EPS system diagnostics. When the diagnostics is completed, the steering wheel will return to its normal condition.
- A click noise may be heard from the EPS relay after the ignition switch is turned to the ON or LOCK/OFF position.
- Motor noise may be heard when the vehicle is at a stop or at a low driving speed.
- The steering effort increases if the steering wheel is rotated continuously when the vehicle is not in motion. However, after a few minutes, it will return to its normal conditions.

(Continued)

(Continued)

- If an error is detected in the electric power steering system, EPS will stop assisting driver in steering the vehicle to prevent accidents and the warning light on the cluster will illuminate or blink. Kia recommends to visit an authorized Kia dealer/service partner.
- When you operate the steering wheel in low temperature, abnormal noise could occur. If temperature rises, the noise will disappear. This is a normal condition.
- When the vehicle is stationary, if you turn the steering wheel all the way to the left or right continuously, the steering wheel becomes heavier from the end. This is not a system malfunction but for your safety. As time passes, the steering wheel returns to its normal condition.

(Continued)

(Continued)

- When the charging system warning light comes on or the voltage is low (when the alternator (or battery) does not operate normally or it malfunctions), the steering wheel may get heavy and become difficult to control operate abnormally.

Tilt & telescopic steering

A tilt and telescopic steering wheel allows you to adjust the steering wheel before you drive. You can also raise it to give your legs more room when you exit and enter the vehicle.
The steering wheel should be positioned so that it is comfortable for you to drive, while permitting you to see the instrument panel warning lights and gauges.

⚠ WARNING

- **Never adjust the angle and height of steering wheel while driving. You may lose your steering control and cause severe personal injury or accidents.**
- **After adjusting, push the steering wheel both up and down to be certain it is locked in position.**

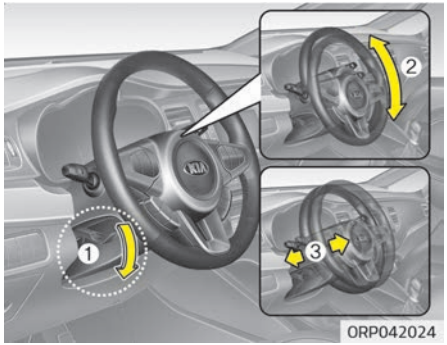

To change the steering wheel angle, pull down the lock release lever (1), adjust the steering wheel to the desired angle (2) and height (3), then pull up the lock-release lever to lock the steering wheel in place. Be sure to adjust the steering wheel to the desired position before driving.

Heated steering wheel (if equipped)

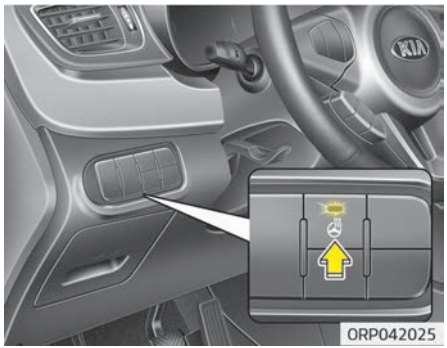

With the ignition switch in the ON position, pressing the heated steering wheel button warms the steering wheel.

✻ NOTICE

- The heated steering wheel will turn off automatically approximately 30 minutes after the heated steering wheel is turned on.

(Continued)

(Continued)

- If you turn on the ignition again after turning off the engine in half an hour (after operating heater button), the heated steering wheel will be maintained in its 'ON' condition.

⚠ CAUTION

- **Do not install any grip to operate the steering wheel. This causes damage to the heated steering wheel system.**
- **When cleaning the heated steering wheel, do not use an organic solvent such as paint thinner, benzene, alcohol and gasoline. Doing so may damage the surface of the steering wheel.**
- **If the surface of steering wheel is damaged by sharp object, damage to the heated steering wheel components could occur.**

Horn



To sound the horn, press the horn symbol on your steering wheel.
Check the horn regularly to be sure it operates properly.

✻ NOTICE

To sound the horn, press the area indicated by the horn symbol on your steering wheel (see illustration). The horn will operate only when this area is pressed.

⚠ CAUTION

Do not strike the horn severely to operate it, or hit it with your fist. Do not press on the horn with a sharp-pointed object.

FLEX STEER (if equipped)

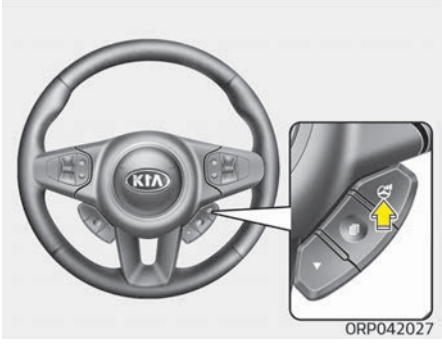

The FLEX STEER controls steering effort as driver's preference or road condition.
You can select the desired steering mode by pressing the steering mode button.

When the steering mode button is pressed, the selected steering mode will appear on the LCD display.
If the steering mode button is pressed within 4 seconds, the steering mode will change.
If the steering wheel mode button is not pressed for about 4 seconds, the LCD display will change to the previous screen.

Normal mode

The normal mode offers medium steering effort.

Comfort mode

The steering wheel becomes lighter. The comfort mode is usually used when driving in downtown or parking the vehicle.
Also, the comfort mode helps weak people to drive easily.

Sport mode

The steering wheel becomes heavier. The sport mode is usually used when driving in highway.

⚠ CAUTION

- **For your safety, if you press the steering mode button while operating the steering wheel, the LCD display will change. At the same time, the steering effort will change automatically to the selected mode.**
- **Be careful when changing the steering mode while driving.**
- **When the electronic power steering is not working properly, the flex steering wheel will not work.**

MIRRORS

Inside rearview mirror

Adjust the rearview mirror so that the center view through the rear window is seen. Make this adjustment before you start driving.

⚠ WARNING

■ Rear visibility

Do not place objects in the rear seat or cargo area which would interfere with your vision out the rear window.

⚠ WARNING

Do not adjust the rearview mirror while the vehicle is moving. This could result in loss of control, and an accident which could cause death, serious injury or property damage.

⚠ WARNING

Do not modify the inside mirror and do not install a wide mirror. It could result in injury, during an accident or deployment of the air bag.

Day/night rearview mirror (if equipped)



Make this adjustment before you start driving and while the day/night lever (3) is in the day position.
Pull the day/night lever (3) toward you to reduce glare from the headlights of vehicles behind you during night driving.

Remember that you lose some rearview clarity in the night position.

✻ (1): Day, (2): Night

Electric chromic mirror (ECM) (if equipped)

The electric rearview mirror automatically controls the glare from the headlights of the vehicle behind you in nighttime or low light driving conditions. The sensor mounted in the mirror senses the light level around the vehicle, and automatically controls the headlight glare from vehicles behind you.
When the engine is running, the glare is automatically controlled by the sensor mounted in the rearview mirror.
Whenever the shift lever is shifted into R (Reverse), the mirror will automatically go to the brightest setting in order to improve the drivers view behind the vehicle.

⚠ CAUTION

When cleaning the mirror, use a paper towel or similar material dampened with glass cleaner. Do not spray glass cleaner directly on the
(Continued)

(Continued)

mirror as that may cause the liquid cleaner to enter the mirror housing.



To operate the electric rearview mirror:

- The mirror defaults to the ON position whenever the ignition switch is turned on.
- Press the ON/OFF button (1) to turn the automatic dimming function off. The mirror indicator light (2) will turn off.
  Press the ON/OFF button (1) to turn the automatic dimming function on. The mirror indicator light (2) will illuminate.

❋ (2): Indicator, (3): Sensor

Outside rearview mirror

Be sure to adjust mirror angles before driving.
Your vehicle is equipped with both left-hand and right-hand outside rearview mirrors. The mirrors can be adjusted remotely with the remote switch. The mirror heads can be folded back to prevent damage during an automatic car wash or when passing in a narrow street.

⚠ WARNING

■ Rearview mirrors

- **The outside rearview mirror is convex. Objects seen in the mirror are closer than they appear.**
- **Use your interior rearview mirror or direct observation to determine the actual distance of following vehicles when changing lanes.**

⚠ CAUTION

Do not scrape ice off the mirror face; this may damage the surface of the

(Continued)

(Continued)

glass. If ice should restrict movement of the mirror, do not force the mirror for adjustment. To remove ice, use a deicer spray, or a sponge or soft cloth with very warm water.

⚠ CAUTION

If the mirror is jammed with ice, do not adjust the mirror by force. Use an approved spray de-icer (not radiator antifreeze) to release the frozen mechanism or move the vehicle to a warm place and allow the ice to melt.

⚠ WARNING

Do not adjust or fold the outside rearview mirrors while the vehicle is moving. This could result in loss of control, and an accident which could cause death, serious injury or property damage.

Remote control

■ Type A

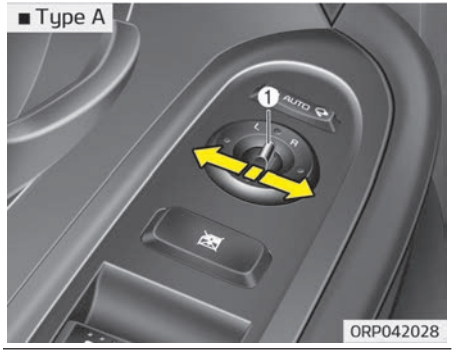

ORP042028

■ Type B

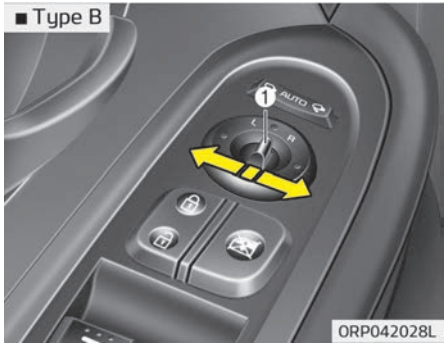

ORP042028L

The electric remote control mirror switch allows you to adjust the position of the left and right outside rearview mirrors.
To adjust the position of either mirror, move the lever (1) to R (Right) or L (Left) to select the right side mirror or the left side mirror, then press a corresponding point on the mirror adjustment control to position the selected mirror up, down, left or right.
After adjustment, put the lever into neutral (center) position to prevent inadvertent adjustment.

⚠ CAUTION

- **The mirrors stop moving when they reach the maximum adjusting angles, but the motor continues to operate while the switch is pressed. Do not press the switch longer than necessary, the motor may be damaged.**
- **Do not attempt to adjust the outside rearview mirror by hand. Doing so may damage the parts.**

Folding the outside rearview mirror

Manual type

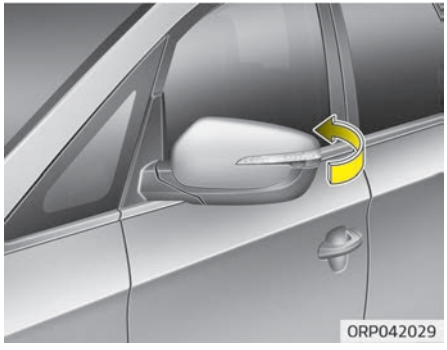

ORP042029

To fold outside rearview mirror, grasp the housing of mirror and then fold it toward the rear of the vehicle.

Electric type

■ Type A

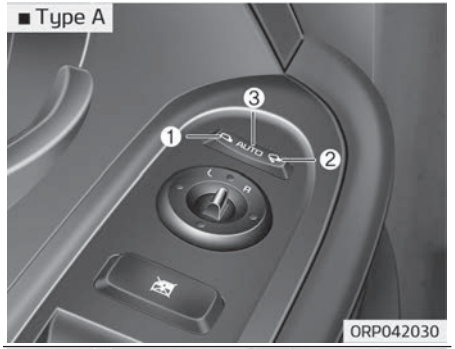

■ Type B

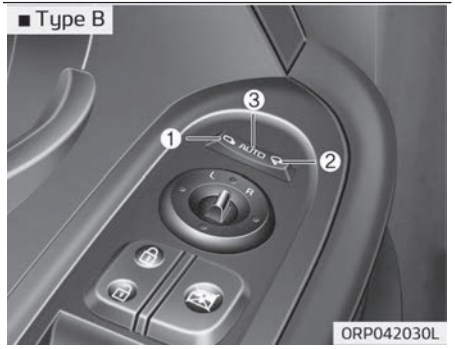

The outside rearview mirror can be folded or unfolded by pressing the switch as below.

Left (1): The mirror will unfold.
Right (2): The mirror will fold.
Center (AUTO, 3):
The mirror will fold or unfold automatically as follows:

- Without smart key system
  - The mirror will fold or unfold when the door is locked or unlocked by the transmitter.
- With smart key system
  - The mirror will fold or unfold when the door is locked or unlocked by the smart key.
  - The mirror will fold or unfold when the door is locked or unlocked by the button on the outside door handle.
  - The mirror will unfold when you approach the vehicle (all doors closed and locked) with a smart key in possession.

⚠ CAUTION

The electric type outside rearview mirror operates even though the ignition switch is in the OFF position. However, to prevent unnecessary battery discharge, do not adjust the
(Continued)

(Continued)

mirrors longer than necessary while the engine is not running.

⚠ CAUTION

In case it is an electric type outside rearview mirror, don't fold it by hand. It could cause motor failure.

INSTRUMENT CLUSTER

■ Type A



■ Type B



ORP046040L/ORP047041L

1. Tachometer
2. Speedometer
3. Engine coolant temperature gauge
4. Fuel gauge
5. LCD display
6. Warning and indicator lights (if equipped)
7. Turn signal indicator lights

❊ The actual cluster in the vehicle may differ from the illustration. For more information, refer to "Gauges" on page 4-49.

Instrument Cluster Control

⚠ WARNING

Never adjust the instrument cluster while driving. This could result in loss of control and lead to an accident that may cause death, serious injury, or property damage.

Adjusting Instrument Cluster Illumination (if equipped)

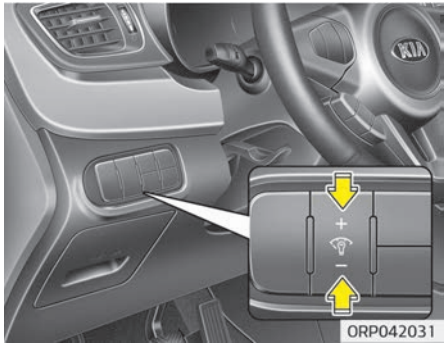

The brightness of the instrument panel illumination is changed by pressing the illumination control button ("+" or "–") when the ignition switch or Engine Start/Stop button is ON, or the tale lights are turned on.



- If you hold the illumination control button ("+" or "–"), the brightness will be changed continuously.
- If the brightness reaches to the maximum or minimum level, an alarm will sound.

LCD Display Control

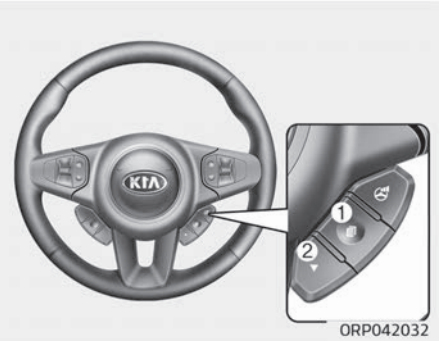

The LCD display modes can be changed by using the control buttons on the steering wheel.

[Type A]

1. : TRIP button for changing trip modes
2. ▽: RESET button for resetting items

[Type B]

1. : MODE button for changing modes or SELECT button for setting the selected item

2. ▽: MOVE button for changing items or RESET button for resetting the selected item

❇ For the LCD modes, refer to “LCD display” on page 4-56.

Gauges

Speedometer

■ Type A (km/h)



ORP042042

■ Type B (km/h)



ORP042045

■ Type A (MPH, km/h)



ORP042044

■ Type B (MPH, km/h)



ORP042047

■ Type A (km/h, MPH)



ORP042043

■ Type B (km/h, MPH)



ORP042046

The speedometer indicates the speed of the vehicle and is calibrated in miles per hour (mph) and/or kilometers per hour (km/h).

Tachometer

■ Diesel
Type A



■ Gasoline
Type A



ORP042049/ORP042048

■ Diesel
Type B



■ Gasoline
Type B



ORP042051/ORP042050

The tachometer indicates the approximate number of engine revolutions per minute (rpm).
Use the tachometer to select the correct shift points and to prevent lugging and/or over-revving the engine.

⚠ CAUTION

Do not operate the engine within the tachometer's RED ZONE. This may cause severe engine damage.

Engine coolant temperature gauge

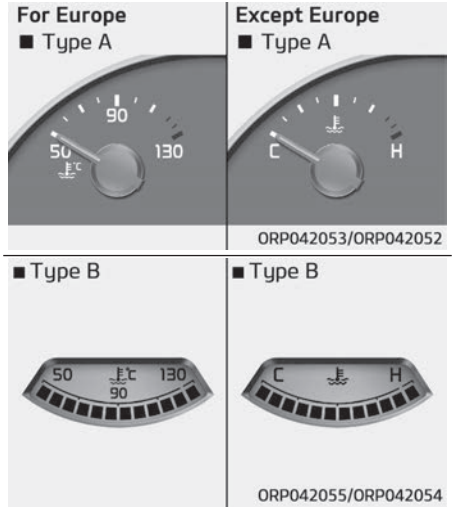

This gauge indicates the temperature of the engine coolant when the ignition switch or Engine Start/Stop button is ON.

⚠ CAUTION

If the gauge pointer moves beyond the normal range area toward the "130 or H" position, it indicates overheating that may damage the engine.
Do not continue driving with an overheated engine. If your vehicle overheats, refer to "If the engine overheats" on page 7-08.

⚠ WARNING

Never remove the radiator cap when the engine is hot. The engine coolant is under pressure and could severely burn. Wait until the engine is cool before adding coolant to the reservoir.

Fuel Gauge

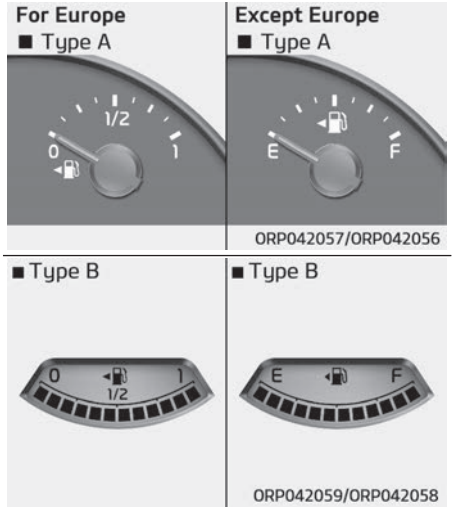

This gauge indicates the approximate amount of fuel remaining in the fuel tank.

✻ NOTICE

- The fuel tank capacity is given in "Recommended lubricants and capacities" on page 9-11.
- The fuel gauge is supplemented by a low fuel warning light, which will illuminate when the fuel tank is nearly empty.
- On inclines or curves, the fuel gauge pointer may fluctuate or the low fuel warning light may come on earlier than usual due to the movement of fuel in the tank.

⚠ WARNING

■ Fuel Gauge

Running out of fuel can expose vehicle occupants to danger.
You must stop and obtain additional fuel as soon as possible after the warning light comes on or when the gauge indicator comes close to the "0 or E (Empty)" level.

⚠ CAUTION

Avoid driving with an extremely low fuel level. Running out of fuel could cause the engine to misfire damaging the catalytic converter.

Odometer



The odometer Indicates the total distance that the vehicle has been driven and should be used to determine when periodic maintenance should be performed.

- Odometer range : 0 ~ 1599999 kilometers or 0 ~ 999999 miles.

Outside temperature gauge



This gauge indicates the current outside air temperatures by 1 °C (1 °F) .
- Temperature range: -40 °C ~ 60 °C (-40 °F ~ 140 °F)

The outside temperature on the display may not change immediately like a general thermometer to prevent the driver from being inattentive.
The temperature unit (from °C to °F or from °F to °C) can be changed by using the "User Settings" mode of the LCD display.

❉ For more details, refer to "LCD display" on page 4-56.

Transaxle Shift Indicator

Automatic Transaxle Shift Indicator (if equipped)

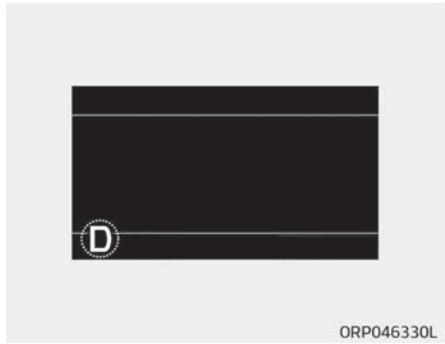

This indicator displays which automatic transaxle shift lever is selected.
- Park: P
- Reverse: R
- Neutral: N
- Drive: D
- Sports Mode: 1, 2, 3, 4, 5, 6

Automatic Transaxle Shift Indicator in Sports Mode (if equipped, For Europe)

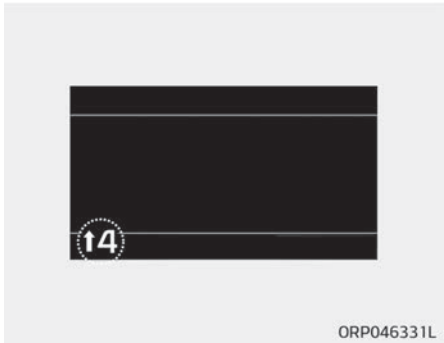

In the Sports Mode, this indicator informs which gear is desired while driving to save fuel.
- Shifting up: ▲2, ▲3, ▲4, ▲5, ▲6
- Shifting down: ▼1, ▼2, ▼3, ▼4, ▼5

For example
- ▲3: Indicates that shifting up to the 3rd gear is desired (currently the shift lever is in the 2nd or 1st gear).
- ▼3: Indicates that shifting down to the 3rd gear is desired (current-

ly the shift lever is in the 4th, 5th, or 6th gear).

When the system is not working properly, the indicator is not displayed.

Manual Transaxle Shift Indicator (if equipped)

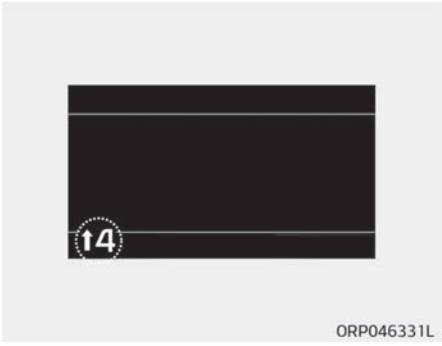

This indicator informs which gear is desired while driving to save fuel.

- Shifting up: ▲2, ▲3, ▲4, ▲5, ▲6
- Shifting down: ▼1, ▼2, ▼3, ▼4, ▼5

For example

▲3: Indicates that shifting up to the 3rd gear is desired (currently the shift lever is in the 2nd or 1st gear).

▼3: Indicates that shifting down to the 3rd gear is desired (currently the shift lever is in the 4th, 5th, or 6th gear).

When the system is not working properly, the indicator is not displayed.

Dual Clutch Transmission Shift Indicator (if equipped)

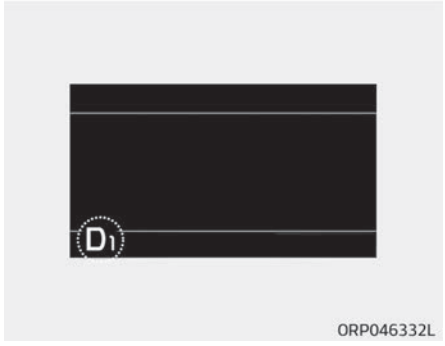

This indicator displays which shift lever is selected.

- Park: P
- Reverse: R
- Neutral: N
- Drive: D
- Sports Mode: D_1, D_2, D_3, D_4, D_5, D_6, D_7

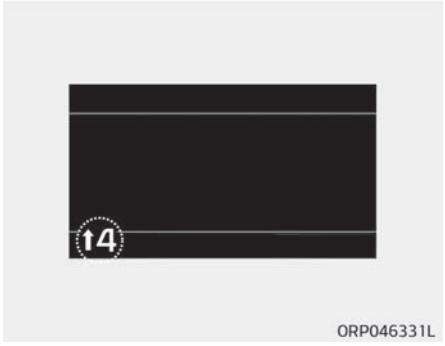

Dual Clutch Transmission Shift Indicator in Sports Mode (if equipped, For Europe)

In the Sports Mode, this indicator informs which gear is desired while driving to save fuel.

- Shifting up: ▲2, ▲3, ▲4, ▲5, ▲6, ▲7
- Shifting down: ▼1, ▼2, ▼3, ▼4, ▼5, ▼6

For example

▲3: Indicates that shifting up to the 3rd gear is desired (currently

the shift lever is in the 2nd or 1st gear).

▼3: Indicates that shifting down to the 3rd gear is desired (currently the shift lever is in the 4th, 5th, 6th or 7th gear).

When the system is not working properly, the indicator is not displayed.

LCD DISPLAY (IF EQUIPPED)

LCD Modes (for type B cluster)

Modes	Symbol	Explanation
Trip Computer		This mode displays driving information like the tripmeter, fuel economy, and so on. For more details, refer to “Trip computer” on page 4-64.
Turn By Turn (if equipped)	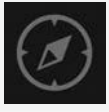	This mode displays the state of the navigation.
LDWS (if equipped)		This mode displays the state of the Lane Departure Warning System (LDWS). For more details, refer to “Lane Departure Warning System (LDWS)” on page 6-67.
User Settings		On this mode, you can change settings of the doors, lamps, and so on.
Master warning		This mode informs of service interval (mileage or days) and warning messages related to TPMS.

❇ For controlling the LCD modes, refer to “LCD Display Control” on page 4-48.

Service mode

Service Interval

■ Type A



ORP046312L

■ Type B

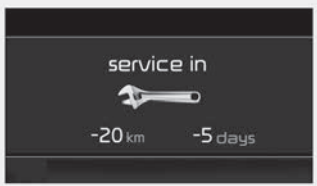

ORP046311L

Service in

It calculates and displays when you need a scheduled maintenance service (mileage or days).

If the remaining mileage or time reaches 1,500 km (1,500 mi.) or 30 days, "Service in" message is displayed for several seconds each time you set the ignition switch or Engine Start/Stop Button to the ON position.

■ Type A

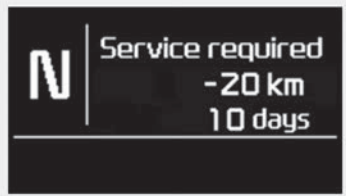

ORP046313L

■ Type B

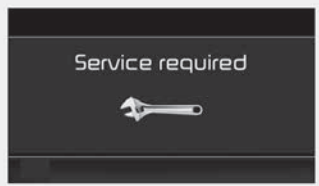

ORP046314L

Service required

If you do not have your vehicle serviced according to the already inputted service interval, “Service required” message is displayed for several seconds each time you set the ignition switch or Engine Start/Stop Button to the ON position.

To reset the service interval to the mileage and days you inputted before:

- Activate the reset mode by pressing the RESET button ▽ for more than 5 seconds, then press the RESET button ▽ again for more than 1 second (Europe).
- Press the RESET button ▽ for more than 1 second (Except Europe).



ORP046315L

Service in OFF

If the service interval is not set, "Service in OFF" message is displayed on the LCD display (for Type A).

✻ NOTICE

If any of the following conditions occurs, the mileage and days may be incorrect.

- The battery cable is disconnected.
- The fuse switch is turned off.
- The battery is discharged.

User settings mode

Description



On this mode, you can change setting of the doors, lamps, and so on.

⚠ WARNING

Do not adjust the User Setting while driving. You may lose your steering control and cause severe personal injury or accidents.

Edit settings after shifting to P/Edit settings after engaging parking brake

This warning message appears if you try to adjust the User Settings while driving.

- Automatic/Dual clutch transmission
  For your safety, change the User Settings after parking the vehicle, applying the parking brake and moving the shift lever to P (Park).
- Manual transmission
  For your safety, change the User Settings after engaging the parking brake.

Driving Assist (if equipped)

- **Rear Cross Traffic Alert (if equipped):** If this item is checked, the rear cross traffic alert function will be activated.

✻ For more details, refer to "Blind Spot Detection system" on page 6-71.

- **BSD (Blind Spot Detection) Sound (if equipped):** If this item checked, the blind spot detection sound will be activated.

✻ For more details, refer to "Blind Spot Detection system" on page 6-71.

Door

- **Auto Door Lock (if equipped):**
  - Off: The auto door lock operation will be deactivated.
  - Speed: All doors will be automatically locked when the vehicle speed exceeds 15 km/h (9.3 mph).
  - Shift Lever: All doors will be automatically locked if the automatic transaxle/dual clutch transmission shift lever is shifted from the P (Park) position to the R (Reverse), N (Neutral), or D (Drive) position.
- **Automatically Unlock:**
  - Off: The auto door unlock opera tion will be canceled.
  - Vehicle Off/On key out: All doors will be automatically unlocked when the ignition key is remove from the ignition switch or the Engine Star/Stop button is set to the OFF position.
  - Driver Door Unlock: All doors will be automatically unlocked if the driver's door is unlocked.
  - On Shift to P: All doors will be automatically unlocked if the transaxle shift lever is shifted to the P (Park) position.
- **Door Lock Sound (if equipped):**
  If this item checked, the door lock sound function will be activated when locking doors.

Lights

- **One Touch Turn Signal:**
  If this item is checked, the lane change signals will blink 3, 5 or 7 times when the turn signal lever is moved slightly.
- **Head Lamp Delay (if equipped):**
  If this item is checked, the headlamp delay and headlamp welcome function will be activated.
- **Welcome Light (if equipped):**
  If this item is checked, the welcome light function of the puddle lamp will be activated.

Sound

- **Park Assist System Vol. (if equipped):**
  Adjust the Park Assist System volume. (Level 1~3)

❇ For more details, refer to “Parking Assist System” on page 4-84

- **Welcome Sound (if equipped):**
  If this item checked, the welcome sound function will be activated.

Service interval

- **Service Interval:**
  On this mode, you can activate the service interval function with mileage (km or mi.) and period (months).
  - Off: The service interval function will be deactivated.
  - On: You can set the service interval (mileage and months).

Other features

- **Fuel economy auto reset:**
  - Off: The average fuel economy will not reset automatically whenever refueling.
  - On (Auto Reset): The average fuel economy will reset automatically when refueling.

❇ For more details, refer to “Trip Computer” on page 4-64.

- **Temperature unit:**
  Choose the temperature unit. (°C,°F)

Language

Choose the language.

Turn By Turn Mode (if equipped)

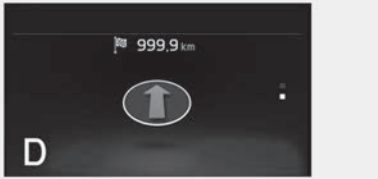

ORP046318L

This mode displays the state of the navigation.

Warning messages (if equipped)

Shift to "P" position (for smart key system and automatic transaxle/ dual clutch transmission)

- This warning message illuminates if you try to turn off the engine without the shift lever in P (Park) position.
- At this time, the Engine Start/Stop Button turns to the ACC position (If you press the Engine Start/Stop Button once more, it will turn to the ON position).

Low key battery (for smart key system)

- This warning message illuminates if the battery of the smart key is discharged when the Engine Start/Stop Button changes to the OFF position.

Press start button while turn steering (for smart key system)

- This warning message illuminates if the steering wheel does not unlock normally when the Engine Start/Stop Button is pressed.
- It means that you should press the Engine Start/Stop Button while turning the steering wheel right and left.

Steering wheel unlocked (for smart key system)

- This warning message illuminates if the steering wheel does not lock when the Engine Start/Stop Button changes to the OFF position.

Check steering wheel lock system (for smart key system)

- This warning message illuminates if the steering wheel does not lock normally when the Engine Start/Stop Button changes to the OFF position.

Press brake pedal to start engine (for smart key system and automatic transaxle/dual clutch transmission)

- This warning message illuminates if the Engine Start/Stop Button changes to the ACC position twice by pressing the button repeatedly without depressing the brake pedal.
- It means that you should depress the brake pedal to start the engine.

Press clutch pedal to start engine (for smart key system and manual transaxle)

- This warning message illuminates if the Engine Start/Stop Button changes to the ACC position twice by pressing the button repeatedly without depressing the clutch pedal.
- It means that you should depress the clutch pedal to start the engine.

Key not in vehicle (for smart key system)

- This warning message illuminates if the smart key is not in the vehicle when you press the Engine Start/Stop Button.

- It means that you should always have the smart key with you.

Key not detected (for smart key system)

- This warning message illuminates if the smart key is not detected when you press the Engine Start/Stop Button.

Press start button again (for smart key system)

- This warning message illuminates if you can not operate the Engine Start/Stop Button when there is a problem with the Engine Start/Stop Button system.
- It means that you could start the engine by pressing the Engine Start/Stop Button once more.
- If the warning illuminates each time you press the Engine Start/Stop Button, have the vehicle inspected by a professional workshop. Kia recommends to visit an authorized Kia dealer/service partner.

Press start button with smart key (for smart key system)

- This warning message illuminates if you press the Engine Start/Stop Button while the warning message "Key not detected" is illuminating.
- At this time, the immobilizer indicator light blinks.

Check fuse "Brake Switch" (for smart key system and automatic transaxle/dual clutch transmission)

- This warning message illuminates if the brake switch fuse is disconnected.
- It means that you should replace the fuse with a new one. If that is not possible, you can start the engine by pressing the Engine Start/Stop Button for 10 seconds in the ACC position.

Shift to "P" or "N" to start engine (for smart key system and automatic transaxle/dual clutch transmission)

- This warning message illuminates if you try to start the engine with the shift lever not in the P (Park) or N (Neutral) position.

✻ NOTICE

You can start the engine with the shift lever in the N (Neutral) position. But, for your safety, we recommend that you start the engine with the shift lever in the P (Park) position.

Check exhaust system (for diesel engine)

This warning message illuminates if the DPF system has a malfunction. at this time, DPF warning light also blinks.
In this case, have the DPF system checked by a professional workshop. Kia recommends to visit an authorized Kia dealer/service partner.

✻ For more details, refer to "Warning lights" on page 4-69.

Door open



• It means that any door is open.

Hood open



• It means that the hood is open.

Tailgate open



• It means that the tailgate is open.

Sunroof open (if equipped)



- This warning message illuminates if you turn off the engine and then open the driver's door when the sunroof is open.

Low washer fluid (if equipped)



- This warning message illuminates on the service reminder mode if the washer fluid level in the reservoir is nearly empty.
- It means that you should refill the washer fluid.

Turn on "FUSE SWITCH"



- This warning message illuminates if the fuse switch under the steering wheel is OFF.
- It means that you should turn the fuse switch on.

✻ For more details, refer to "Fuses" on page 8-66.

TRIP COMPUTER

Overview

Description

The trip computer is a microcomputer-controlled driver information system that displays information related to driving.

✻ NOTICE

Some driving information stored in the trip computer (for example Average Vehicle Speed) resets if the battery is disconnected.

Trip Modes (Type A)

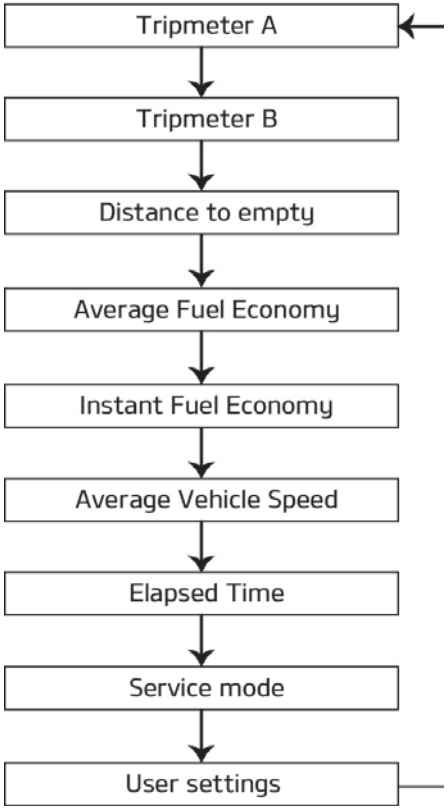

To change the trip mode, press the TRIP button.

Trip Modes (Type B)

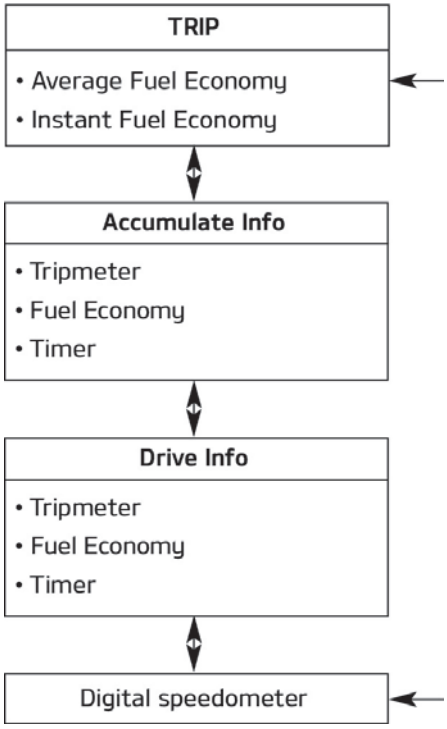

To change the trip mode, press the MOVE button ▽.

Trip A/B (for Type A cluster)



Tripmeter (1)

- The tripmeter is the total driving distance since the last tripmeter reset.
  - Distance range: 0.0 ~ 9999.9 km or mi.
- To reset the tripmeter, press the RESET button ▽ on the steering wheel for more than 1 second when the tripmeter is displayed.

Average Vehicle Speed (2)

- The average vehicle speed is calculated by the total driving distance and driving time since the last average vehicle speed reset.
  - Speed range: 0 ~ 240 km/h or 0 ~ 160 MPH.
- To reset the average vehicle speed, press the RESET button ▽ on the steering wheel for more than 1 second when the average vehicle speed is displayed.

✻ NOTICE

- The average vehicle speed is not displayed if the driving distance has been less than 50 meters (0.03 miles) or the driving time has been less than 10 seconds since the ignition switch or Engine Start/Stop button was turned to ON.
- Even if the vehicle is not in motion, the average vehicle speed keeps going while the engine is running.

Elapsed Time (3)

- The elapsed time is the total driving time since the last elapsed time reset.
  - Time range (hh:mm): 00:00 ~ 99:59
- To reset the elapsed time, press the RESET button ▽ on the steering wheel for more than 1 second when the elapsed time is displayed.

✻ NOTICE

Even if the vehicle is not in motion, the elapsed time keeps going while the engine is running.

Fuel economy

■ Type A



ORP046089L

■ Type B



ORP046326L

Distance To Empty (1)

- The distance to empty is the estimated distance the vehicle can be driven with the remaining fuel.
  - Distance range: 1~999 km or 1~999 mi.
- If the estimated distance is below 1 km (1 mi.), the trip computer will display "---" as distance to empty.

✻ NOTICE

- If the vehicle is not on level ground or the battery power has been interrupted, the distance to empty function may not operate correctly.
- The distance to empty may differ from the actual driving distance as it is an estimate of the available driving distance.
- The trip computer may not register additional fuel if less than 6 liters (1.6 gallons) of fuel are added to the vehicle.

(Continued)

(Continued)

- The fuel economy and distance to empty may vary significantly based on driving conditions, driving habits, and condition of the vehicle.

Average Fuel Economy (2)

- The average fuel economy is calculated by the total driving distance and fuel consumption since the last average fuel economy reset.
  - Fuel economy range: 0.0 ~ 99.9 L/100 km
- The average fuel economy can be reset both manually and automatically. Choose the average fuel reset mode you prefer with in "User settings" of the "LCD Display" as below;
  - OFF (manual reset)
    The average fuel economy will not reset automatically.
    To clear the average fuel economy manually, press the RESET button "▽" on the steering wheel for more than 1 second when the average fuel economy is displayed.

- After Ignition (automatic reset)
  The average fuel economy will reset 4 hours after the engine is turned off.
- After refueling (automatic reset)
  The average fuel economy will reset to zero (---) when the vehicle speed exceeds 1 km/h after refueling more than 6 liters.

✻ NOTICE

The average fuel economy is not displayed for more accurate calculation if the vehicle does not drive more than 10 seconds or 50 meters (0.03 miles) since the ignition switch or Engine Start/Stop button is turned to ON.

Instant Fuel Economy (3)

- This mode displays the instant fuel economy during the last few seconds when the vehicle speed is more than 10 km/h (6.2 mph).
  - Fuel economy range: 0.0 ~ 20.0 L/100 km or 0.0~50.0 MPG

Warning lights

✻ NOTICE

■ Warning lights

Make sure that all warning lights are OFF after starting the engine. If any light is still ON, this indicates a situation that needs attention.

Air bag warning light



This warning light illuminates:

- Once you set the ignition switch or Engine Start/Stop button to the ON position.
  - It illuminates for approximately 6 seconds and then goes off.
- When there is a malfunction with the SRS.
  In this case, have the vehicle inspected by a professional workshop. Kia recommends to visit an authorized Kia dealer/service partner.

Seat belt warning light



This warning light informs the driver that the seat belt is not fastened.

✻ For more details, refer to "Seat belts" on page 3-21.

Parking brake & brake fluid warning light



This warning light illuminates:

- Once you set the ignition switch or Engine Start/Stop button to the ON position.
  - It illuminates for approximately 3 seconds
  - It remains on if the parking brake is applied.
- When the parking brake is applied.
- When the brake fluid level in the reservoir is low.
  - If the warning light illuminates with the parking brake released, it indicates the brake fluid level in reservoir is low.

If the brake fluid level in the reservoir is low:

1. Drive carefully to the nearest safe location and stop your vehicle.
2. With the engine stopped, check the brake fluid level immediately and add fluid as required (For more details, refer to "Brake fluid" on page 8-34). Then check all brake components for fluid leaks. If any leak on the brake system is still found, the warning light remains on, or the brakes do not operate properly, do not drive the vehicle.
   In this case, have the vehicle towed to a professional workshop and inspected. Kia recommends to visit an authorized Kia dealer/service partner.

Dual-diagonal braking system

Your vehicle is equipped with dual-diagonal braking systems. This means you still have braking on two wheels even if one of the dual systems should fail.
With only one of the dual systems working, more than normal pedal travel and greater pedal pressure are required to stop the vehicle.
Also, the vehicle will not stop in as short a distance with only a portion of the brake system working.
If the brakes fail while you are driving, shift to a lower gear for additional engine braking and stop the vehicle as soon as it is safe to do so.

⚠ WARNING

■ Parking brake & brake fluid warning light

Driving the vehicle with a warning light ON is dangerous. If the parking brake & brake fluid warning light illuminates with the parking brake released, it indicates that the brake fluid level is low.
In this case, have the vehicle inspected by a professional workshop. Kia recommends to visit an authorized Kia dealer/service partner.

Anti-lock Brake System (ABS) warning light



This warning light illuminates:

- Once you set the ignition switch or Engine Start/Stop button to the ON position.
  - It illuminates for approximately 3 seconds and then goes off.
- When there is a malfunction with the ABS (The normal braking system will still be operational without the assistance of the anti-lock brake system).
  In this case, have the vehicle inspected by a professional workshop. Kia recommends to visit an authorized Kia dealer/service partner.

Electronic Brake force Distribution (EBD) system warning light





These two warning lights illuminate at the same time while driving:

- When the ABS and regular brake system may not work normally.
  In this case, have the vehicle inspected by a professional workshop. Kia recommends to visit an authorized Kia dealer/service partner.

⚠ WARNING

■ Electronic Brake force Distribution (EBD) system warning light

(Continued)

(Continued)

When both ABS and parking brake & brake fluid warning lights are on, the brake system will not work normally and you may experience an unexpected and dangerous situation during sudden braking.
In this case, avoid high speed driving and abrupt braking.
Have the vehicle inspected by a professional workshop as soon as possible. Kia recommends to visit an authorized Kia dealer/service partner.

✻ NOTICE

■ Electronic Brake force Distribution (EBD) system warning light

When the ABS warning light is on or both ABS and parking brake & brake fluid warning lights are on, the speedometer, odometer, or tripmeter may not work. Also, the EPS warning light may illuminate and the

(Continued)

(Continued)

steering effort may increase or decrease.
In this case, have the vehicle inspected by a professional workshop as soon as possible.
Kia recommends to visit an authorized Kia dealer/service partner.

Electronic Parking Brake (EPB) warning light (if equipped)



This warning light illuminates:

- Once you set the ignition switch or Engine Start/Stop button to the ON position.
  - It illuminates for approximately 3 seconds and then goes off.
- When there is a malfunction with the EPB.
  In this case, have the vehicle inspected by a professional workshop. Kia recommends to visit an authorized Kia dealer/service partner.

✻ NOTICE

■ Electronic Parking Brake (EPB) warning light

The Electronic Parking Brake (EPB) warning light may illuminates when the Electronic Stability control (ESC) indicator light comes on to indicates that the ESC is not working properly (This does not indicate malfunction of the EPB).

Electronic Power Steering (EPS) warning light



This warning light illuminates:

- Once you set the ignition switch or Engine Start/Stop button to the ON position.
  - It remains on until the engine is started.
- When there is a malfunction with the EPS.
  In this case, have the vehicle inspected by a professional workshop. Kia recommends to visit an authorized Kia dealer/service partner.

Malfunction Indicator Lamp (MIL)



This warning light illuminates:

- Once you set the ignition switch or Engine Start/Stop button to the ON position.
  - It remains on until the engine is started.
- When there is a malfunction with the emission control system.
  In this case, have the vehicle inspected by a professional workshop. Kia recommends to visit an authorized Kia dealer/service partner.

⚠ CAUTION

■ **Malfunction Indicator Lamp (MIL)**

Driving with the Malfunction Indicator Lamp (MIL) on may cause damage to the emission control systems which could effect drivability and/or fuel economy.

⚠ CAUTION

■ Gasoline engine

If the Malfunction Indicator Lamp (MIL) illuminates, potential catalytic converter damage is possible which could result in loss of engine power.
In this case, have the vehicle inspected by a professional workshop as soon as possible.
Kia recommends to visit an authorized Kia dealer/service partner.

⚠ CAUTION

■ Diesel engine with DPF (if equipped)

When the Malfunction Indicator Lamp (MIL) blinks, it may stop blinking after driving the vehicle:
- at more than 60 km/h (37 mph), or
- at more than 2nd gear with 1500~2000 engine rpm for a certain time (for about 25 minutes).

If the Malfunction Indicator Lamp (MIL) continues to blink in spite of the procedure, have the DPF system checked by a professional workshop.
(Continued)

(Continued)

Kia recommends to visit an authorized Kia dealer/service partner.
If you continue to drive with the Malfunction Indicator Lamp (MIL) blinking for a long time, the DPF system can be damaged and fuel consumption can worsen.

⚠ CAUTION

■ Diesel Engine

If the Malfunction Indicator Lamp (MIL) blinks, some error related to the injection quantity adjustment occurs which could result in loss of engine power, combustion noise and poor emission.
In this case, have the engine control system inspected by a professional workshop. Kia recommends to visit an authorized Kia dealer/service partner.

Charging system warning light



This warning light illuminates:

- Once you set the ignition switch or Engine Start/Stop button to the ON position.
  - It remains on until the engine is started.
- When there is a malfunction with either the alternator or electrical charging system.

If there is a malfunction with either the alternator or electrical charging system:

1. Drive carefully to the nearest safe location and stop your vehicle.
2. Turn the engine off and check the alternator drive belt for looseness or breakage.
   If the belt is adjusted properly, there may be a problem in the electrical charging system.
   In this case, have the vehicle inspected by a professional workshop as soon as possible.
   Kia recommends to visit an authorized Kia dealer/service partner.

Engine oil pressure warning light



This warning light illuminates:

- Once you set the ignition switch or Engine Start/Stop button to the ON position.
  - It remains on until the engine is started.
- When the engine oil pressure is low.

If the engine oil pressure is low:

1. Drive carefully to the nearest safe location and stop your vehicle.
2. Turn the engine off and check the engine oil level (for more details, refer to "Engine oil" on page 8-35). If the level is low, add oil as required.
   If the warning light remains on after adding oil or if oil is not available, have the vehicle inspected by a professional workshop as soon as possible. Kia recommends to visit an authorized Kia dealer/service partner.

⚠ CAUTION

■ Engine Oil Pressure Warning Light

- **If the engine does not stop immediately after the Engine Oil Pressure Warning Light is illuminated, severe damage could result.**
- **If the warning light stays on while the engine is running, it indicates that there may be serious engine damage or malfunction. In this case,**
  1. **Stop the vehicle as soon as it is safe to do so.**
  2. **Turn off the engine and check the oil level. If the oil level is low, fill the engine oil to the proper level.**
  3. **Start the engine again. If the warning light stays on after the engine is started, turn the engine off immediately. In this case, have the vehicle inspected by a professional workshop. Kia recommends to visit an authorized Kia dealer/service partner.**

Engine oil level warning light (if equipped)



This warning light illuminates:

- Once you set the ignition switch or Engine Start/Stop button to the ON position
  - It remains on until the engine is started.
- When the engine oil level should be checked.

If the engine oil level is low:

1. Drive carefully to the nearest safe location and stop your vehicle.
2. Turn the engine off and check the engine oil level (For more details, refer to "Engine oil" on page 8-35). If the level is low, add oil as required.
   If the warning light remains on after adding oil or if oil is not available, have the vehicle inspected by a professional workshop as soon as possible. Kia recommends to visit an authorized Kia dealer/service partner.

Low fuel level warning light



This warning light illuminates:

When the fuel tank is nearly empty.

If the fuel tank is nearly empty:

Add fuel as soon as possible.

⚠ CAUTION

■ Low fuel level

Driving with the low fuel level warning light on or with the fuel level below "0 or E" can cause the engine to misfire and damage the catalytic converter (if equipped).

Low tire pressure warning light (if equipped)



This warning light illuminates:

- Once you set the ignition switch or Engine Start/Stop button to the ON position.
  - It illuminates for approximately 3 seconds and then goes off.
- When one or more of your tires are significantly underinflated

❊ For more details, refer to "Tire Pressure Monitoring System (TPMS)" on page 7-09.

This warning light remains on after blinking for approximately 60 seconds or repeats blinking and off at the intervals of approximately 3 seconds:

- When there is a malfunction with the TPMS.
  In this case, have the vehicle inspected by a professional workshop as soon as possible.
  Kia recommends to visit an authorized Kia dealer/service partner.

❊ For more details, refer to "Tire Pressure Monitoring System (TPMS)" on page 7-09.

⚠ WARNING

■ Safe stopping

- **The TPMS cannot alert you to severe and sudden tire damage caused by external factors.**

(Continued)

(Continued)

- **If you notice any vehicle instability, immediately take your foot off the accelerator pedal, apply the brakes gradually with light force, and slowly move to a safe position off the road.**

Door ajar warning light



This warning light illuminates:

When a door is not closed securely.

Tailgate open warning light



This warning light illuminates:

When the tailgate is not closed securely.

Fuel filter warning light (diesel engine)



This warning light illuminates:

- Once you set the ignition switch or Engine Start/Stop button to the ON position.
  - It illuminates for approximately 3 seconds and then goes off.

- When water has accumulated inside the fuel filter.
  In this case, remove the water from the fuel filter.

❇ For more details, refer to "Fuel filter" on page 8-45.

⚠ CAUTION

■ Fuel filter warning light

- **When the fuel filter warning light illuminates, engine power (vehicle speed & idle speed) may decrease.**
- **If you keep driving with the warning light on, engine parts (injector, common rail, high pressure fuel pump) may be damaged. If this occurs, have the vehicle inspected by a professional workshop as soon as possible. Kia recommends to visit an authorized Kia dealer/service partner.**

Exhaust system (DPF) warning light (diesel engine)



This warning light illuminates:

- When there is a malfunction with the Diesel Particulate Filter (DPF) system.
- When this warning light illuminates, it may turn off after driving the vehicle:
  - at more than 60 km/h (37 mph), or
  - at more than 2nd gear with 1,500~2,000 engine rpm for a certain time (for about 25 minutes).

If this warning light blinks in spite of the procedure (at this time the LCD warning message will be displayed), have the DPF system checked by a professional workshop. Kia recommends to visit an authorized Kia dealer/service partner.

⚠ CAUTION

■ Diesel engine with DPF (if equipped)

(Continued)

(Continued)

If you continue to drive with the DPF warning light blinking for a long time, the DPF system can be damaged and fuel consumption can worsen.

Overspeed warning light (if equipped)

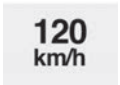

This warning light blinks:

- When you drive the vehicle more than 120 km/h.
  - This is to prevent you from driving your vehicle with overspeed.
  - The overspeed warning chime also sound for approximately 5 seconds.

Washer fluid warning light (if equipped)



This warning light illuminates:

- When the washer fluid level in the reservoir is nearly empty.
  In this case, you should refill the washer fluid.

Master warning light (if equipped)



- This warning light informs the driver the following situations
  - Low washer fluid (if equipped)
  - TPMS (if equipped)
  - Service reminder

The master warning light illuminates when more than one of the above warning situations occur.
If the warning situation is solved, the master warning light will be turned off.

Icy road warning light (if equipped)



This warning light blinks 10 times and then illuminates, and also warning chime sounds 3 times:

- When the temperature on the Outside Temperature Gauge is below approximately 4 °C (39.2 °F) with the ignition switch or Engine Start/Stop button in the ON position.

✻ NOTICE

If the icy road warning light appears while driving, you should drive more attentively and safely refraining from over-speeding, rapid acceleration, sudden braking or sharp turning, etc.

Indicator lights

Electronic Stability Control (ESC) indicator light (if equipped)



This indicator light illuminates:

- Once you set the ignition switch or Engine Start/Stop button to the ON position.
  - It illuminates for approximately 3 seconds and then goes off.
- When there is a malfunction with the ESC system.
  In this case, have the vehicle inspected by a professional workshop. Kia recommends to visit an authorized Kia dealer/service partner.

This indicator light blinks:

While the ESC is operating.

✻ For more details, refer to "Electronic Stability Control (ESC)" on page 6-49.

Electronic Stability Control (ESC) OFF indicator light (if equipped)



This indicator light illuminates:

- Once you set the ignition switch or Engine Start/Stop button to the ON position.
  - It illuminates for approximately 3 seconds and then goes off.
- When you deactivate the ESC system by pressing the ESC OFF button.

✻ For more details, refer to "Electronic Stability Control (ESC)" on page 6-49.

ECO indicator light (if equipped)



This indicator light illuminates:

- When you activate the active ECO system by pressing the ACTIVE ECO button.

✻ For more details, refer to "Active ECO System" on page 6-39.

Auto stop indicator (if equipped)



This indicator will illuminate when the engine enters the Idle Stop mode of the ISG (Idle Stop and Go) system.
When the automatic starting occurs, the auto stop indicator on the cluster will blink for 5 seconds.

✻ For more details, refer to "ISG (Idle Stop and Go) system" on page 6-16.

✻ NOTICE

When the engine automatically starts by the ISG system, some warning lights (ABS, ESC, ESC OFF, EPS or Parking brake warning light) may turn on for a few seconds.
This happens because of the low battery voltage. It does not mean the system is malfunctioning.

Immobilizer indicator light (without Smart Key) (if equipped)



This indicator light illuminates:

- When the vehicle detects the immobilizer in your key properly while the ignition switch is ON.
  - At this time, you can start the engine.
  - The indicator light goes off after starting the engine.

This indicator light blinks:

- When there is a malfunction with the immobilizer system.
  In this case, have the vehicle inspected by a professional workshop. Kia recommends to visit an authorized Kia dealer/service partner.

Immobilizer indicator light (with Smart Key) (if equipped)



This indicator light illuminates for up to 30 seconds:

- When the vehicle detects the smart key in the vehicle properly while the Engine Start/Stop button is ACC or ON.
  - At this time, you can start the engine.
  - The indicator light goes off after starting the engine.

This indicator light blinks for a few seconds:

- When the smart key is not in the vehicle.
  - At this time, you cannot start the engine.

This indicator light illuminates for 2 seconds and goes off:

- When the vehicle cannot detect the smart key which is in the vehicle while the Engine Start/Stop button is ON.
  In this case, have the vehicle inspected by a professional workshop. Kia recommends to visit an authorized Kia dealer/service partner.

This indicator light blinks:

- When the battery of the smart key is weak.

- At this time, you cannot start the engine. However, you can start the engine if you press the Engine Start/Stop button with the smart key (for more details, refer to "Starting the engine" on page 6-12).

• When there is a malfunction with the immobilizer system.
In this case, have the vehicle inspected by a professional workshop. Kia recommends to visit an authorized Kia dealer/service partner.

Turn signal indicator light



This indicator light blinks:

• When you turn the turn signal light on.

If any of the following occurs, there may a malfunction with the turn signal system. In this case, have the vehicle inspected by a professional workshop. Kia recommends to visit an authorized Kia dealer/service partner.

- The indicator light does not blink but illuminates.
- The indicator light blinks more rapidly.
- The indicator light does not illuminate at all.

Low beam indicator light (if equipped)



This indicator light illuminates:

• When the headlights are on.

High beam indicator light



This indicator light illuminates:

• When the headlights are on and in the high beam position

• When the turn signal lever is pulled into the Flash-to-Pass position.

Light ON indicator light



This indicator light illuminates:

• When the tail lights or headlights are on.

Front fog indicator light (if equipped)



This indicator light illuminates:

• When the front fog lights are on.

Rear fog indicator light (if equipped)



This indicator light illuminates:

• When the rear fog lights are on.

Glow indicator light (diesel engine)



This indicator light illuminates:

• When the engine is being preheated with the ignition switch or Engine Start/Stop button in the ON position.
  - The engine can be started after the glow indicator light goes off.
  - The illumination time varies with the engine coolant temperature, air temperature, and battery condition.

If the indicator light remains on or blinks after the engine has warmed up or while driving, there may a malfunction with the engine preheating system.
In this case, have the vehicle inspected by a professional workshop. Kia recommends to visit an authorized Kia dealer/service partner.

✻ NOTICE

■ Engine preheating
(Continued)

(Continued)

If the engine does not start within 10 seconds after the preheating is completed, set the ignition switch or Engine Start/Stop button to the LOCK or OFF position for 10 seconds and then to the ON position in order to preheat the engine again.

Cruise indicator light (if equipped)



This indicator light illuminates:

- When the cruise control system is enabled.

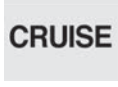

❊ For more details, refer to “Cruise Control System” on page 6-56.

Cruise SET indicator light (if equipped)



This indicator light illuminates:

- When the cruise control speed is set.

❊ For more details, refer to “Cruise Control System” on page 6-56.

Speed limit indicator light (if equipped)



This indicator light illuminates:

- When the speed limit control system is enabled.

❊ For more details, refer to “Speed Limit Control System” on page 6-63.

REAR PARKING ASSIST SYSTEM (IF EQUIPPED)

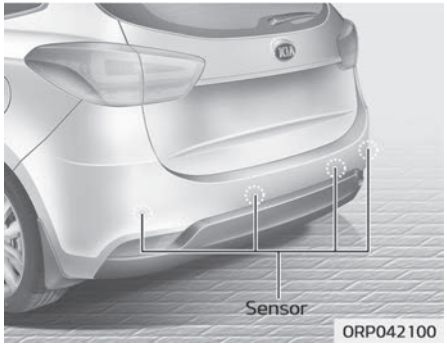

The rear parking assist system assists the driver during backward movement of the vehicle by chiming if any object is sensed within a distance of 120 cm (47 in.) behind the vehicle.
This system is a supplemental system and it is not intended to nor does it replace the need for extreme care and attention of the driver.
The sensing range and objects detectable by the back sensors are limited. Whenever backing-up, pay as much attention to what is behind you as you would in a vehicle without a rear parking assist system.

⚠ WARNING

The rear parking assist system is a supplementary function only. The operation of the rear parking assist system can be affected by several factors (including environmental conditions). It is the responsibility of the driver to always check the area behind the vehicle before and while backing up.

Operation of the rear parking assist system

Operating condition

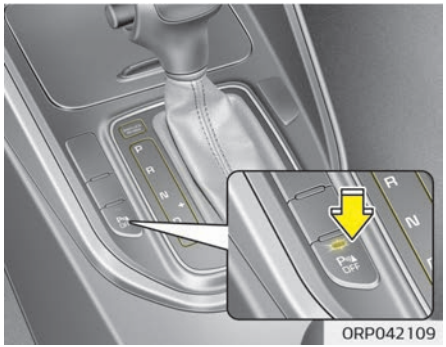

- This system will activate when the indicator on the rear parking assist OFF button is not illuminated.
  If you desire to deactivate the rear parking assist system, press the rear parking assist OFF button again. (The indicator on the button will illuminate.) To turn the system on, press the button again. (The indicator on the button will go off.)
- This system will activate when backing up with the ignition switch ON.
  If the vehicle is moving at a speed over 5 km/h (3 mph), the system may not be activated correctly.
- The sensing distance while the rear parking assist system is in operation is approximately 120 cm (47 in.).
- When more than two objects are sensed at the same time, the closest one will be recognized first.

Types of warning sound

- When an object is 120 cm to 61 cm (47 in. to 23.6 in.) from the rear bumper: Buzzer beeps intermittently
- When an object is 60 cm to 31 cm (23.6 in. to 12.2 in.) from the rear bumper: Buzzer beeps more frequently

- When an object is within 30 cm (11.8 in.) of the rear bumper: Buzzer sounds continuously.

Type of the warning indicator (if equipped)

Distance from object	Warning indicator	
	Type A	Type B
61 cm~120 cm (24 in. ~47 in.)	 *1	
31 cm~60 cm (12.2 in. ~23.6 in.)	 *1	

*1 :It indicates the range of sensed object by each sensor. (Left, Center, Right)

Distance from object	Warning indicator	
	Type A	Type B
Less than 30 cm (11.8 in.)	 *1	

*1 :It indicates the range of sensed object by each sensor. (Left, Center, Right)

❈ In case the object is between or close to the sensors, the indicator could be different.

Non-operational conditions of rear parking assist system

The rear parking assist system may not operate properly when:

1. Moisture is frozen to the sensor. (It will operate normally when the moisture has been cleared.)
2. The sensor is covered with foreign matter, such as snow or water, or the sensor cover is blocked. (It will operate normally when the material is removed or the sensor is no longer blocked.)
3. Driving on uneven road surfaces (unpaved roads, gravel, bumps, gradient).
4. Objects generating excessive noise (vehicle horns, loud motorcycle engines, or truck air brakes) are within range of the sensor.
5. Heavy rain or water spray exists.
6. Wireless transmitters or mobile phones are within range of the sensor.
7. Trailer towing.

The detecting range may decrease when:

1. The sensor is stained with foreign matter such as snow or water. (The sensing range will return to normal when removed.)
2. Outside air temperature is extremely hot or cold.

The following objects may not be recognized by the sensor:

1. Sharp or slim objects such as ropes, chains or small poles.
2. Objects which tend to absorb the sensor frequency such as clothes, spongy material or snow.

3. Undetectable objects smaller than 1 m (40 in.) and narrower than 14 cm (6 in.) in diameter.

Rear parking assist system precautions

- The rear parking assist system may not sound sequentially depending on the speed and shapes of the objects detected.
- The rear parking assist system may malfunction if the vehicle bumper height or sensor installation has been modified or damaged. Any non-factory installed equipment or accessories may also interfere with the sensor performance.
- The sensor may not recognize objects less than 30 cm (11.8 in.) from the sensor, or it may sense an incorrect distance. Use caution.
- When the sensor is frozen or stained with snow, dirt, or water, the sensor may be inoperative until the stains are removed using a soft cloth.
- Do not push, scratch or strike the sensor. Sensor damage could occur.

✻ NOTICE

This system can only sense objects within the range and location of the sensors; it cannot detect objects in other areas where sensors are not installed. Also, small or slim objects, such as poles or objects located between sensors may not be detected by the sensors.
Always visually check behind the vehicle when backing up.
Be sure to inform any drivers of the vehicle that may be unfamiliar with the system regarding the systems capabilities and limitations.

⚠ WARNING

Pay close attention when the vehicle is driven close to objects on the road, particularly pedestrians, and especially children. Be aware that some objects may not be detected by the sensors, due to the object's distance, size or material, all of which can limit the effectiveness of the sensor.
(Continued)

(Continued)

Always perform a visual inspection to make sure the vehicle is clear of all obstructions before moving the vehicle in any direction.

Self-diagnosis

When you shift the gear to the R (Reverse) position and if one or more of the below occurs you may have a malfunction in the rear parking assist system.

- You don't hear an audible warning sound or if the buzzer sounds intermittently.

– Type A
  - 
(blinks) is displayed. (if equipped)

– Type B
  -  is displayed. (if equipped)

If this occurs, have the system checked by a professional workshop. Kia recommends to visit an authorized Kia dealer/service partner.

⚠ WARNING

Your new vehicle warranty does not cover any accidents or damage to the vehicle or injuries to its occupants due to a rear parking assist system malfunction. Always drive safely and cautiously.

PARKING ASSIST SYSTEM (IF EQUIPPED)

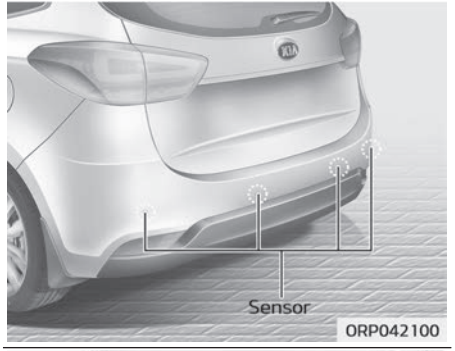

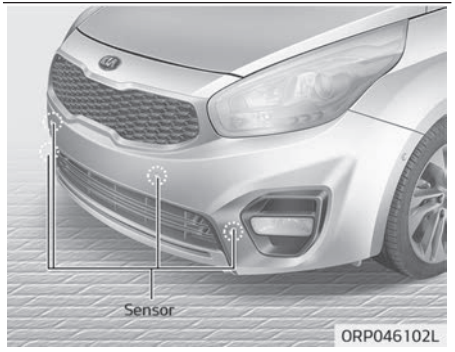

The parking assist system assists the driver during movement of the vehicle by chiming or displaying the area an obstacle is detected on the instrument cluster if any object is sensed within the distance of 100 cm (39.4 in.) in front and 120 cm (47 in.) behind the vehicle.
This system is a supplemental system and it is not intended to nor does it replace the need for extreme care and attention of the driver.
The sensing range and objects detectable by the sensors are limited.
Whenever moving pay as much attention to what is in front and behind of you as you would in a vehicle without a parking assist system.

⚠ WARNING

The parking assist system should only be considered as a supplementary function. The driver must check the front and rear view. The operational function of the parking assist system can be affected by many factors and conditions of the surroundings, so the responsibility rests always with the driver.

Operation of the parking assist system

Operating condition

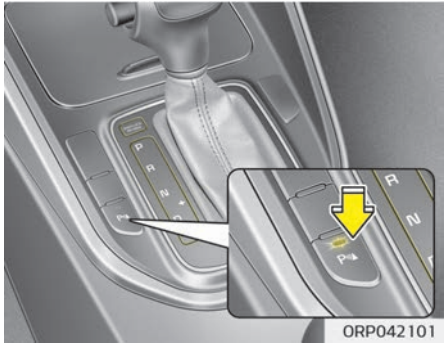

- This system activates when the parking assist system button is pressed with the ignition switch ON.
- The indicator of the parking assist system button turns on automatically and activates the parking assist system when you shift the gear to the R (Reverse) position or press the SPAS button (if equipped). It will turn off automatically when you drive above 40 km/h (24.8 mph).

- If the vehicle speed is above 10 km/h (6.2 mph), the parking assist system will not operate.
- The sensing distance while moving forward is approximately 100 cm (39.4 in.) when you are driving less than 10 km/h (6.2 mph).
- When more than two objects are sensed at the same time, the closest one will be recognized first.

✻ NOTICE

It may not operate if it's distance from the object is already less than approximately 25 cm when the system is ON.

Type of warning indicator and sound

■ : with warning sound

Distance from object		Warning indicator		Warning sound
		When driving forward	When driving rearward	
100 cm~61 cm	Front		-	Buzzer beeps intermittently
120 cm~61 cm	Rear	-		Buzzer beeps intermittently
60 cm~31 cm	Front			Buzzer beeps frequently
	Rear	-		Buzzer beeps frequently
30 cm	Front			Buzzer sounds continuously
	Rear	-		Buzzer sounds continuously

✻ NOTICE

- The actual warning sound and indicator may differ from the illustration according to objects or sensor status.
- Do not wash the vehicle's sensor with high pressure water.

⚠ CAUTION

- **This system can only sense objects within the range and location of the sensors; It cannot detect objects in other areas where sensors are not installed. Also, small or slim objects, such as poles or objects located between sensors may not be detected by the sensors. Always visually check behind the vehicle when backing up.**
- **Be sure to inform any drivers of the vehicle that may be unfamiliar with the system regarding the systems capabilities and limitations.**

Non-operational conditions of parking assist system

Parking assist system may not operate normally when:

1. Moisture is frozen to the sensor. (It will operate normally when moisture melts.)
2. Sensor is covered with foreign matter, such as snow or water, or the sensor cover is blocked. (It will operate normally when the material is removed or the sensor is no longer blocked.)
3. Sensor is stained with foreign matter such as snow or water. (Sensing range will return to normal when removed.)
4. The parking assist button is off.

There is a possibility of parking assist system malfunction when:

1. Driving on uneven road surfaces such as unpaved roads, gravel, bumps, or gradient.
2. Objects generating excessive noise such as vehicle horns, loud motorcycle engines, or truck air brakes can interfere with the sensor.
3. Heavy rain or water spray.
4. Wireless transmitters or mobile phones present near the sensor.
5. Sensor is covered with snow.

Detecting range may decrease when:

1. Outside air temperature is extremely hot or cold.
2. Undetectable objects smaller than 1 m and narrower than 14 cm in diameter.

The following objects may not be recognized by the sensor:

1. Sharp or slim objects such as ropes, chains or small poles.
2. Objects, which tend to absorb sensor frequency such as clothes, spongy material or snow.

✻ NOTICE

1. The warning may not sound sequentially depending on the speed and shapes of the objects detected.
2. The parking assist system may malfunction if the vehicle bumper height or sensor installation has been modified. Any non-factory installed equipment or accessories may also interfere with the sensor performance.
3. Sensor may not recognize objects less than 30 cm from the sensor, or it may sense an incorrect distance. Use with caution.
4. When the sensor is frozen or stained with snow or water, the sensor may be inoperative until the stains are removed using a soft cloth.
5. Do not push, scratch or strike the sensor with any hard objects that could damage the surface of the sensor. Sensor damage could occur.

✻ NOTICE

This system can only sense objects within the range and location of the sensors, it cannot detect objects in other areas where sensors are not installed. Also, small or slim objects, or objects located between sensors may not be detected.
Always visually check in front and behind the vehicle when driving.
Be sure to inform any drivers in the vehicle that may be unfamiliar with the system regarding the systems capabilities and limitations.

⚠ WARNING

Pay close attention when the vehicle is driven close to objects on the road, particularly pedestrians, and especially children. Be aware that some objects may not be detected by the sensors, due to the objects distance, size or material, all of which can limit the effectiveness of the sensor. Always perform a visual inspection
(Continued)

(Continued)

to make sure the vehicle is clear of all obstructions before moving the vehicle in any direction.

Self-diagnosis

When you shift the gear to the R (Reverse) position and if one or more of the below occurs you may have a malfunction in the parking assist system.

- You don't hear an audible warning sound or if the buzzer sounds intermittently.

– Type A
  – 

is displayed. (if equipped)

– Type B
  – 
is displayed. (if equipped)

If this occurs, have the system checked by a professional workshop. Kia recommends to visit an authorized Kia dealer/service partner.

⚠ WARNING

Your new vehicle warranty does not cover any accidents or damage to the vehicle or injuries to its occupants related to a parking assist system. Always drive safely and cautiously.

SMART PARKING ASSIST SYSTEM (SPAS) (IF EQUIPPED)

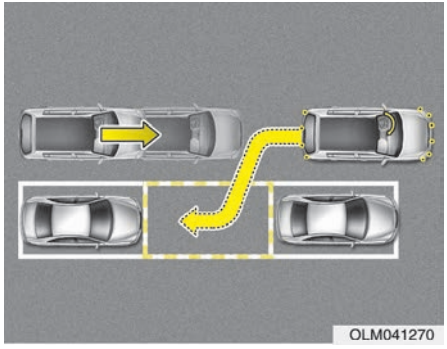

The Smart Parking Assist System helps drivers park their vehicle by using sensors to measure parallel parking spaces, control the steering wheel to semi-automatically park the vehicle and provide instruction on the LCD display to help through parking.

✻ NOTICE

- The vehicle will not stop for pedestrians or objects that may be in its path, so the driver must monitor the maneuver.

(Continued)

(Continued)

- Use the system only in parking lots and places used for parking.
- The system does not work if there is no car parked in front of the parking space you are planning to park or if it is a diagonal parking space.
- After parking your vehicle using the system, the vehicle may not be parked at the exact spot you have wished. For example, the space between your vehicle and wall may not be the distance you have desired.
- Deactivate the system and park your vehicle manually, when the situation requires parking manually.
- The Parking Assist System's front and rear warning sound activates when the Smart Parking Assist System is activated.

(Continued)

(Continued)

- After searching for a parking space is completed, the Smart Parking Assist System will be canceled if the Parking Assist System is cancelled by pressing the button to the OFF position.

⚠ WARNING

- **The Smart Parking Assist System should only be considered as a supplementary function. The driver must check the front and rear view for objects. The operational function of the Smart Parking Assist System can be affected by many factors and conditions of the surroundings, so the responsibility rests always with the driver.**

(Continued)

(Continued)

- **The system may not operate normally if the vehicle needs wheel alignment adjustment. In this case, have the vehicle checked by a professional workshop. Kia recommends to visit an authorized Kia dealer/service partner.**
- **Kia recommends to always use the same size tire and wheel recommended by an authorized Kia dealer/service partner. If you use a different tire or wheel size the system may not work properly.**
  If you use a different tire or wheel size rather than the size recommended by an authorized Kia dealer/service partner, the system may not work properly. Always use the same size tire and wheel.
- **If you use additional frame on license plate then SPAS may generate abnormal warning sound.**

Operating condition

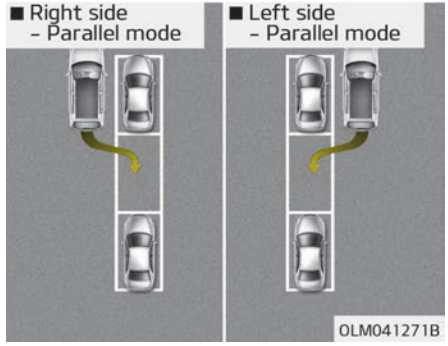

The system will help park the vehicle in the middle or back of a parked vehicle. Use the system when all the below conditions are met.

- When the parking space is a straight line.
- When parallel parking is required.
- When there is a parked vehicle.
- When there is enough space to move the vehicle.

Non-operating condition

Never use the Smart Parking Assist System in the below conditions.

- Curved parking space.
- Inclined roads.
- A vehicle loaded with longer or wider cargo compared to the vehicle.
- Diagonal parking space.
- Parking space with trash, grass or barriers.
- Heavy snow or rain.
- A pole close to the parking line.
- Bumpy roads.
- A vehicle equipped with a snow chain or spare tire.
- Tire pressure lower or higher than the standard tire pressure.
- A trailer connected to the vehicle.
- Slippery or uneven road.
- Big vehicles such as buses or trucks parked.
- Sensor covered with foreign matter, such as snow or water.
- Moisture frozen on the sensor.
- A motorcycle or bicycle parked.
- A trash can or obstacle near.

- Heavy wind.
- Wheel changed to an unauthorized size.
- A problem with the wheel alignment.
- Next to a garden or bush.
- A accessory installed on the detective area the of sensors (such as number plate holder).
- Vehicle leaned severely to one side.
- Strong sunlight or very cold weather.
- Ultrasonic interference other vehicle's. Such as horn sounds of other vehicles, motorcycle's engine noise, air brake noise of heavy vehicles and with the other vehicle's parking assist system working.

⚠ WARNING

Do not use the Smart Parking Assist System in the following conditions for unexpected results may occur and cause a serious accident.

(Continued)

(Continued)

1. Parking on inclines



The driver must apply the accelerator and brake pedal when parking on inclines. If the driver is unfamiliar with applying the accelerator and brake pedal, a vehicle accident may occur.

(Continued)

(Continued)

2. Parking in snow



Snow may interfere with sensor operation or the system may cancel if the road is slippery while parking. Also, if the driver is unfamiliar with applying the accelerator and brake pedal, a car accident may occur.

(Continued)

(Continued)

3. Parking in narrow space

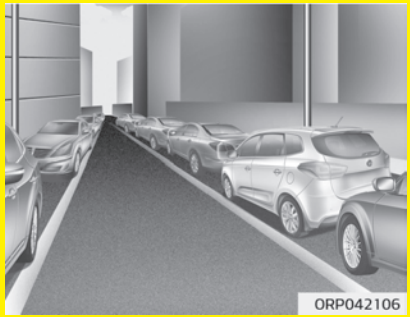

The system may not search for parking spaces if the space is too narrow. Even if it operates always be careful.

(Continued)

(Continued)

4. Parking diagonally

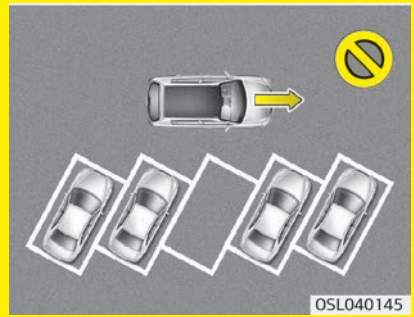

The system is a supplemental for parallel parking. Diagonal line parking is not available. Even if the vehicle is able to enter the space, do not operate the Smart Parking Assist System. The system will attempt parallel parking.

(Continued)

(Continued)

5. Parking in uneven road



Parking in uneven roads, the driver needs to properly apply the pedal (clutch, accelerator or brake). If not, the system may cancel when the vehicle slips or an accident may occur.

(Continued)

(Continued)

6. Parking behind a truck



An accident may occur when parking behind a vehicle higher than yours. For example, bus, truck, etc.

(Continued)

(Continued)

7. Obstacle in parking space

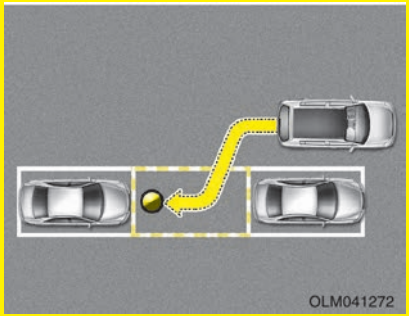

The system may search for a parking space even though an obstacle is in the parking space. An accident may occur if you continue to park the vehicle with the system.
Do not solely rely on the Smart Parking Assist System.

How the system works

1. Activate the Smart Parking Assist System
2. Select parking assist mode
3. Search for parking space (slowly move forward.)
4. Search complete (automatic search by sensor.)
5. Steering wheel control
   1. Shift according to the instruction on the LCD display.
   2. Drive slowly with the brake pedal applied.
6. Smart Parking Assist System complete
7. If necessary, manually adjust position of vehicle.

✻ NOTICE

- Before activating the system check if the conditions are possible to use the system.
- For your safety, always apply the brake pedal except for when driving.

1. Activate Smart Parking Assist System

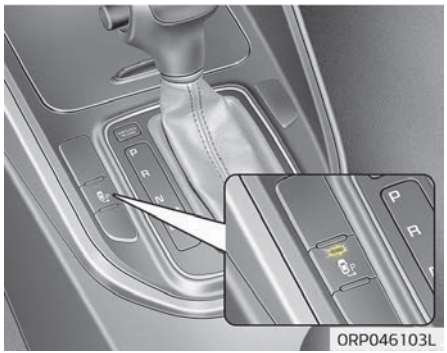

- Press the Smart Parking Assist System button (the button indicator will illuminate).
- The Parking Assist System will be activated (the button indicator will illuminate).
  A warning sound will be heard if an obstacle is detected.
- Press the Smart Parking Assist System button again for more than 2 seconds to turn off the system.
- The Smart Parking Assist System defaults to the OFF position whenever the ignition switch is turned on.

2. Select parking assist mode

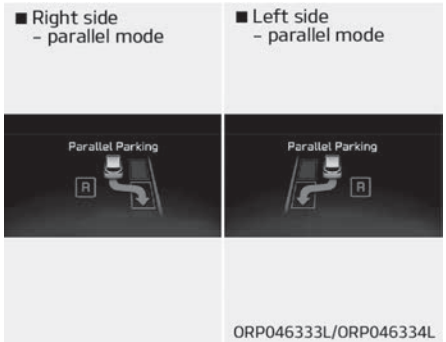

- Select the parking assist mode by pressing the Smart Parking Assist System button with the shift lever in N (Neutral) or D(Drive) and the brake pedal depressed.
- The right side parallel mode is selected automatically when the Smart Parking Assist System is activated.
- To select the left side parallel mode press the Smart Parking Assist System button once more.
- If the button is pressed again, the system will turn off.

3. Search for parking space

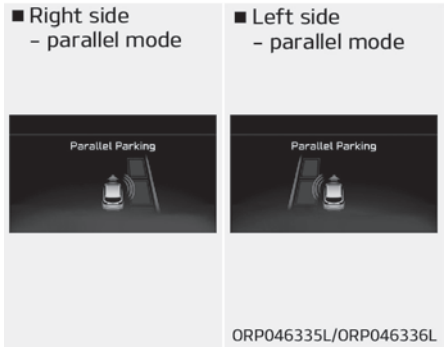

- Slowly drive forward maintaining the distance of approximately 50 cm~150 cm (19.6 in.~59.0 in.) with the parked vehicles. The side sensors will search for a parking space.
- If the vehicle speed is over 30 km/h (18.6 mph), a message will appear to notify to reduce speed.
- If the vehicle speed is over 40 km/h (24.8 mph), the system will cancel.

✻ NOTICE

- Turn on the hazard warning flasher if it is crowded with other vehicles.
- If the parking lot is small, slowly drive more nearer to the parking space.
- The search for a parking space will be completed only when there is enough space for the vehicle to move to park.

✻ NOTICE

- When searching for a parking space, the system may not be able to find a parking space if there is no vehicle parked, a parking space is available after driving by or a parking space is available before driving by.
- The system may not operate normally in the following conditions:
  1. When the sensors are frozen

(Continued)

(Continued)

2. When the sensors are dirty
3. When it snows or rains heavily
4. When a pillar or object is near

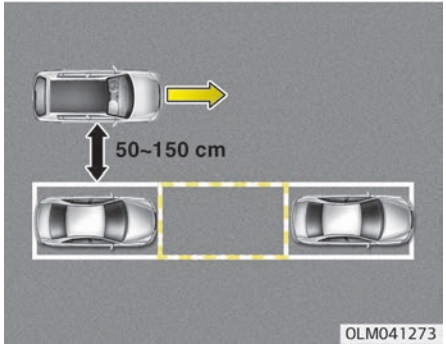

✻ NOTICE

Slowly drive forward maintaining the distance of approximately 50 cm~150 cm (19.6 in.~59.0 in.) with the parked vehicles. If not within the distance, the system may not

(Continued)

(Continued)

be able to search for a parking space.

⚠ CAUTION

After searching for a parking space is completed, continue using the system after checking the surrounding area.

4. Search complete

■ Right side
- parallel mode

■ Left side
- parallel mode



ORP046337L/ORP046338L

While driving forward to search for a parking space, the above message will appear with a beep sound if the search is complete. Stop the vehicle and shift to the R (Reverse) position.

⚠ CAUTION

- **Always drive slowly with the brake pedal applied.**

(Continued)

(Continued)

- **If the parking space is to small the system may be cancelled at the Steering wheel control stage. Do not park your vehicle if the space is too small.**

5. Steering wheel control

- The message ("Check surroundings. Proceed slowly") will appear if the shift lever is in R (Reverse). The steering wheel will be controlled automatically.
- The system will be cancelled if you firmly hold the steering wheel while it is controlled automatically.
- The system will be cancelled if vehicle speed is over 7 km/h (4.3 mph).

⚠ WARNING

Do not put your hands between the steering wheel while it is being automatically controlled.

⚠ CAUTION

- **Always drive slowly with the brake pedal applied.**
- **Always check for objects around your vehicle before driving.**
- **If the vehicle does not move even though the brake pedal is not depressed, check the surrounding before depressing the accelerator pedal. Be sure not to speed over 7 km/h (4.3 mph).**

✻ NOTICE

- If you do not follow the instructions provided, you may fail to park your vehicle.
  However, if the Parking Assist System warning sound (distance from object is within 30 cm: continuous beep) occurs, slowly drive the vehicle to the reverse direction of the detected object after checking the surrounding.

(Continued)

(Continued)

- Always check the surrounding before driving your vehicle if the Parking Assist System warning sound (distance from object is within 30 cm: continuous beep) is heard for the object is close to your vehicle.

To cancel the system while parking

Press the Smart Parking Assist System button or turn the steering wheel to the left or right.

Gear shift while steering wheel control

When the message (“Shift to 1st gear”, “Shift to R”, “Shift to D”) appears with a beep sound, shift the gear and drive the vehicle with the brake pedal depressed.

⚠ CAUTION

Always check the surrounding before releasing the brake pedal.

⚠ WARNING

Always be careful while parking for other vehicles or pedestrians.

6. Smart Parking Assist System completed

Complete parking your vehicle according to the instructions on the LCD display. If required, manually control the steering wheel and complete parking your vehicle.

✻ NOTICE

The brake pedal must be depressed by the driver while parking your vehicle.

The system may be cancelled in the below conditions:

- Ignoring the gear shift message and drive the vehicle approximately 150 cm (59 in.).
- The front and rear Parking Assist System warning sound (distance from object is within 30 cm: continuous beep) is heard at the same time.
- 6 minutes have passed since the vehicle has been controlled by the Smart Parking Assist System.
- The shift lever is changed to the P (Park) or R (Reverse) position while searching for parking space.

Additional instructions (messages)

When the Smart Parking Assist System is operating, a message (“Manually control steering wheel”, “Reduce speed”) may appear regardless of the parking order.
The messages will appear according to the circumstances. Follow the instructions provided while parking your vehicle with the Smart Parking Assist System.

✻ NOTICE

In the below conditions the system will be cancelled. Park your vehicle manually.
1. Search for parking space

(Continued)

(Continued)

- When the ABS/ESC is activated
- When the vehicle speed is over 40 km/h (24.8 mph)
- When you press the Smart Parking Assist System button (the front and rear Parking Assist System operates)
- When you shift the shift lever to R (Reverse)

2. Steering wheel control
   - When the ABS/ESC is activated
   - When the vehicle speed is over 7 km/h (4.3 mph)
   - When you press the Smart Parking Assist System button (the front and rear Parking Assist System operates)
   - When you shift the shift lever to D (Drive) before entering the parking space
   - When you hold the steering wheel firmly

System malfunction



- If there is a problem with the system, when the system is turned on, the above message will appear. Also, the indicator on the button will not light up and a beep sound will be heard 3 times.
- If there is a problem with only the Smart Parking Assist System, the Parking Assist System will operate after 2 seconds.
  If you notice any problem, have the system checked by a professional workshop. Kia recommends to visit an authorized Kia dealer/service partner.

REARVIEW CAMERA (IF EQUIPPED)





❊ The actual rear view in the vehicle may differ from the illustration.

The rearview camera will activate when the back-up light is ON with the ignition switch ON and the shift lever in the R (Reverse) position.

This system is a supplemental system that shows behind the vehicle through the navigation monitor or audio display while backing-up.

⚠ WARNING

- **This system is a supplementary function only. It is the responsibility of the driver to always check the inside/outside rearview mirror and the area behind the vehicle before and while backing up because there is a dead zone that can't see through the camera.**
- **Always keep the camera lens clean. If lens is covered with foreign matter, the camera may not operate normally.**

❊ For more detailed informations, refer to supplement for navigation system.

Battery saver function

- The purpose of this feature is to prevent the battery from being discharged. The system automatically turns off the parking lights when the driver removes the ignition key (Smart key: turns off the engine) and opens the driver-side door.
- With this feature, the parking lights will be turned off automatically if the driver parks on the side of road at night.
  If necessary, to keep the lights on when the ignition key is removed, perform the following:
  1. Open the driver-side door.
  2. Turn the parking lights OFF and ON again using the light switch on the steering column.

Headlamp delay function (if equipped)

The headlamps (and/or taillights) remain on for same minutes (5 minutes) after the ignition key is removed or turned to the ACC or LOCK position. However, if the driver's door is opened and closed, the headlights are turned off after 15 seconds.

The headlights can be turned off by pressing the lock button on the transmitter or smart key twice or turning off the light switch from the headlight or Auto light position.
You can activate or deactivate the headlamp delay function. Refer to "User setting" on page 4-58.

⚠ CAUTION

If the driver gets out of the vehicle through other doors (except driver's door), the battery saver function does not operate and the headlamp delay function does not turn off automatically. Therefore, it causes the battery to be discharged. In this case, make sure to turn off the lamp before getting out of the vehicle.

Headlight (Headlamp) welcome function (if equipped)

When the headlight switch is in the ON or AUTO position and all doors (and tailgate) are closed and locked, if you press the door unlock button on the transmitter or smart key, the headlights will come on for about 15 seconds.

If the headlight switch is in the AUTO position, the function can only operate at night.
At this time, if you press the door unlock button again or door lock button on the transmitter or smart key, the headlights will turn off immediately.
You can activate or deactivate the headlamp welcome function. Refer to "User setting" on page 4-58.

Static bending light (if equipped)

While driving the corner, for your sight and safety, the static bending light turns on automatically. The system will operate automatically as follows:

- When vehicle speed is under 10 km/h and steering wheel angle approximately 80 degrees.
- When vehicle speed is over 10 km/h and steering wheel angle approximately 35 degrees.
- When the vehicle is at a standstill.
- When moving rearwards with one of the above conditions satisfied the lights will light up the opposite direction.

Daytime running light (if equipped)

Daytime Running Lights (DRL) can make it easier for others to see the front of your vehicle during the day. DRL can be helpful in many different driving conditions, and it is especially helpful after dawn and before sunset.
The DRL system will turn OFF when:

1. The headlight (low beam) switch is ON.
2. The engine is OFF.
3. The front fog light is ON.
4. Engaging the parking brake.

Lighting control

■ Type A



ORP042115

■ Type B



ORP042115L

The light switch has a Headlight and a Parking light position.
To operate the lights, turn the knob at the end of the control lever to one of the following positions:

1. OFF position
2. Auto light position (if equipped)
3. Parking light position
4. Headlight position

Parking light position ( )

■ Type A

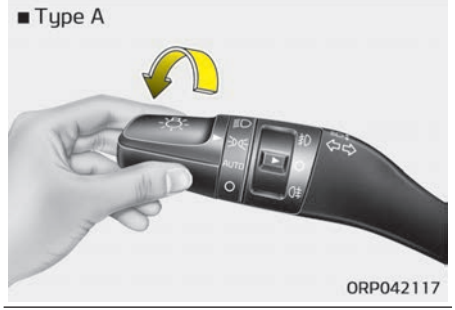

ORP042117

■ Type B

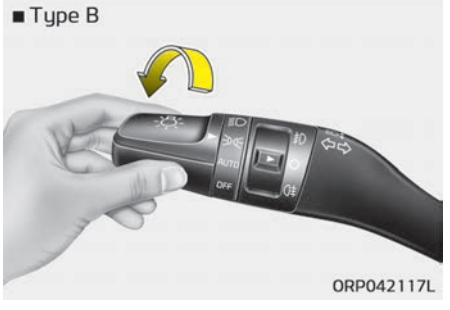

ORP042117L

When the light switch is in the parking light position, the tail, position, license and instrument panel lights are ON.

Headlight position

■ Type A

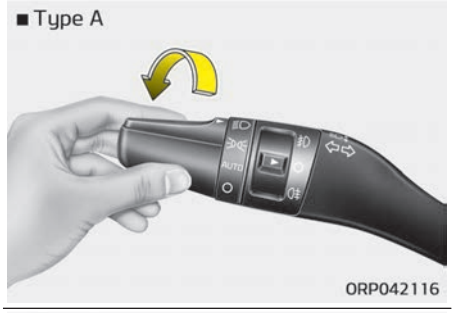

■ Type B

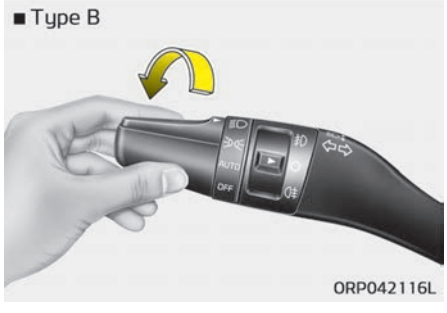

When the light switch is in the headlight position the head, tail, position, license and instrument panel lights are ON.

✻ NOTICE

The ignition switch must be in the ON position to turn on the headlights.

Auto light (if equipped)

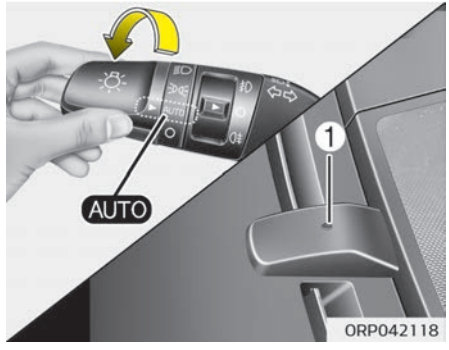

When the light switch is in the AUTO light position, the taillights and headlights will be turned ON or OFF automatically depending on the amount of light outside the vehicle.

⚠ CAUTION

- **Never place anything over the sensor (1) located on the instrument panel, this will ensure better autolight system control.**

(Continued)

(Continued)

- **Don't clean the sensor using a window cleaner, the cleaner may leave a light film which could interfere with sensor operation.**
- **If your vehicle has window tint or other types of coating on the front windshield, the Auto light system may not work properly.**

High-beam operation

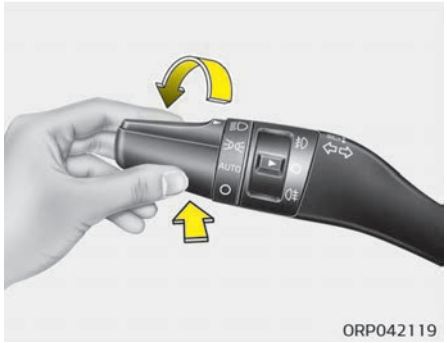

1. Turn the light switch to the headlight position.
2. Push the lever away from you.

- The high-beam indicator will light when the headlight high beams are switched on.
- To prevent the battery from being discharged, do not leave the lights on for a prolonged time while the engine is not running.

⚠ WARNING

Do not use high beam when there are other vehicles. Using high beam could obstruct the other driver's vision.

Flashing headlights

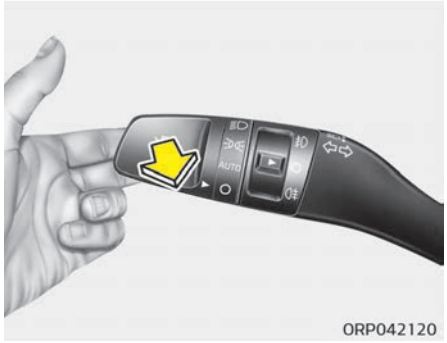

Pull the lever towards you. It will return to the normal position when released. The headlight switch does not need to be on to use this flashing feature.

Turn signals and lane change signals

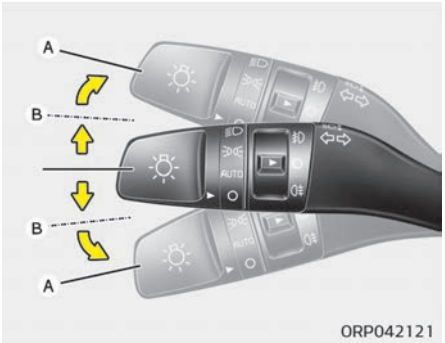

The ignition switch must be on for the turn signals to function. To turn on the turn signals, move the lever up or down (A). Green arrow indicators on the instrument panel indicate which turn signal is operating.
They will self-cancel after a turn is completed. If the indicator continues to flash after a turn, manually return the lever to the OFF position.
To signal a lane change, move the turn signal lever slightly and hold it in position (B). The lever will return to the OFF position when released.

If an indicator stays on and does not flash or if it flashes abnormally, one of the turn signal bulbs may be burned out and will require replacement.

One-touch lane change function

To activate an one-touch lane change function, move the turn signal lever slightly and then release it. The lane change signals will blink 3, 5 or 7 times.
You can choose one-touch lane change blinking function in "One touch turn lamp" of "User setting". Refer to "User setting" on page 4-58.

✻ NOTICE

If an indicator flash is abnormally quick or slow, bulb may be burned out or have a poor electrical connection in the circuit.

Front fog light (if equipped)



Fog lights are used to provide improved visibility when visibility is poor due to fog, rain or snow, etc.

1. Turn on the park light.
2. Turn the light switch (1) to the front fog light position.
3. To turn off the front fog light, turn the light switch to the front fog light position again or turn off the park light.

⚠ CAUTION

When in operation, the fog lights consume large amounts of vehicle electrical power. Only use the fog lights when visibility is poor.

Rear fog light (if equipped)



To turn on the rear fog lights, do one of the following:

- Position the light switch in the headlight position and then turn the light switch (1) to the rear fog light position.
- Position the light switch in the park light, turn the light switch to the front fog light (if equipped) position, and then turn the light switch (1) to the rear fog light position.

To turn the rear fog lights off, do one of the following:

- Turn off the headlight switch.
- Turn the light switch to the rear fog light position again.
- When the light switch in the park light, if you turn off the front fog light, the rear fog light will also turn off.

Headlight leveling device (if equipped)

Manual type

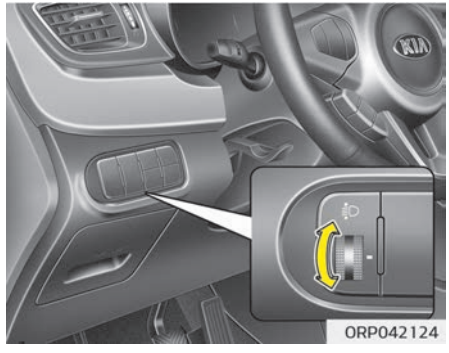

To adjust the headlight beam level according to the number of the passengers and the loading weight in the luggage area, turn the beam leveling switch.
The higher the number of the switch is positioned, the lower the headlight beam level. Always keep the headlight beam at the proper leveling position, or headlights may dazzle other road users.

Listed below are the examples of proper switch settings. For loading conditions other than those listed below, adjust the switch position so that the beam level may be the nearest as the condition obtained according to the list.

Loading condition	Switch position
Driver only	0
Driver + Front passenger	0
Driver + Front passenger+ 3rd row passenger*	1
Full passengers (including driver)	1
Full passengers (including driver) + Maximum permissible loading	3
Driver + Maximum permissible loading	3

* : if equipped

Automatic type

It automatically adjusts the headlight beam level according to the number of passengers and loading weight in the luggage area.

And it offers proper headlight beam under various conditions.

⚠ WARNING

If it is not work properly even though your car is inclined backward according to passenger's posture, or the headlight beam is irradiated to the high or low position, have the system inspected by a professional workshop. Kia recommends to visit an authorized Kia dealer/service partner.
Do not attempt to inspect or replace the wiring yourself.

WIPERS AND WASHERS

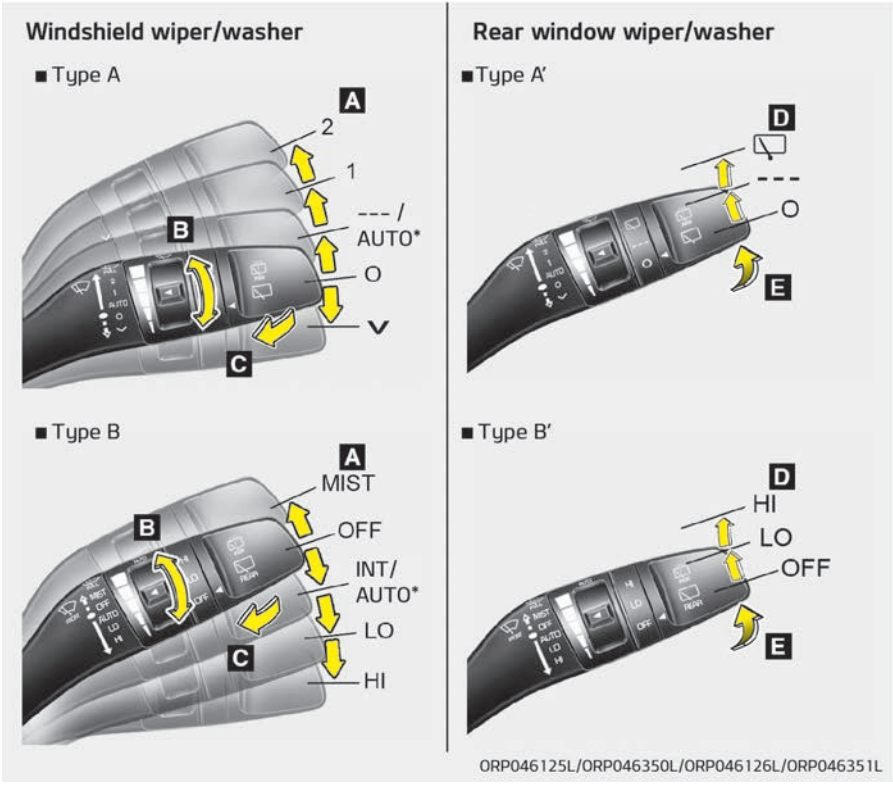

A: Wiper speed control (front)
- MIST/ – Single wipe
- OFF/O – Off
- INT/--- – Intermittent wipe
  AUTO* – Auto control wipe
- LO/1 – Low wiper speed
- HI/2 – High wiper speed

B: Intermittent control wipe time adjustment

C: Wash with brief wipes (front) *

D: Rear wiper/washer control *
- HI/ – High wiper speed
- LO/--- – Low wiper speed*
- OFF/O – Off

E: Wash with brief wipes (rear)

*: if equipped

AUTO (Automatic) control (if equipped)

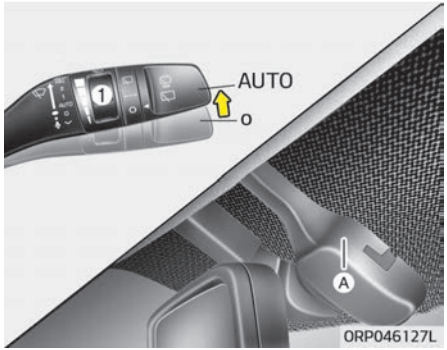

The rain sensor (A) located on the upper end of the windshield glass senses the amount of rainfall and controls the wiping cycle for the proper interval. The more it rains, the faster the wiper operates. When the rain stops, the wiper stops.
To vary the speed setting, turn the speed control knob (1).
If the wiper switch is set in AUTO mode when the ignition switch is ON, the wiper will operate once to perform a self-check of the system. Set the wiper to off position when the wiper is not in use.

⚠ CAUTION

When the ignition switch is ON and the windshield wiper switch is placed in the AUTO mode, use caution in the following situations to avoid any injury to the hands or other parts of the body:

- **Do not touch the upper end of the windshield glass facing the rain sensor.**
- **Do not wipe the upper end of the windshield glass with a damp or wet cloth.**
- **Do not put pressure on the windshield glass.**

⚠ CAUTION

When washing the vehicle, set the wiper switch in the off position to stop the auto wiper operation.
The wiper may operate and be damaged if the switch is set in the AUTO mode while washing the vehicle.
Do not remove the sensor cover located on the upper end of the passenger side windshield glass. Dam-
(Continued)

(Continued)

age to system parts could occur and may not be covered by your vehicle warranty.
When starting the vehicle in winter, set the wiper switch in the off position. Otherwise, wipers may operate and ice may damage the windshield wiper blades. Always remove all snow and ice and defrost the windshield properly prior to operating the windshield wipers.

Windshield wipers

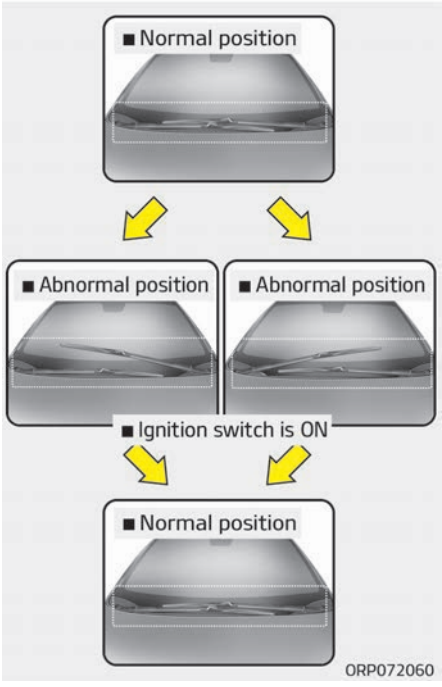

When the wiper blade is not in a normal position, place the ignition switch in the ON position. The wiper blade will return to the normal position.

Following are cases a wiper blade may be in an abnormal position.

- The wiper blade may be positioned abnormally when in an automatic vehicle wash. (Ignition switch in the OFF position)
- The wiper blade may be positioned abnormally when moved by force.
- The passenger's side wiper is on top of the driver's side wiper. (Normal position : The driver's side wiper must be on top of the passenger's side wiper.)

When there is a problem with the motor to operate the wiper blades, the wiper blades will stop and activate the Fail Safety Function in the ignition switch ON position or while driving. Fail Safety Function will operate as follows:

- HI or Mode 2 (5 minutes) ➡ LO or Mode 1 (5 minutes) ➡ INT or Mode --- (5 minutes) ➡ OFF or 0 (Stop)

⚠ CAUTION

If wipers do not return to normal position, you should remove the wax, water repellent, oil and other debris

(Continued)

(Continued)

into windshield and then check wiper operation again.

⚠ CAUTION

After remove the overload condition, if the problem of wiper blades or operating the motor remains, have the system checked by a professional workshop. Kia recommends to visit an authorized Kia dealer/service partner.

❋ Overload condition

- **In a rainy day when driving through a long tunnel**
- **When wax car wash**
- **Water-repellent coating (coated glass)**
- **Cleaning the windshield cleaners**
- **Excessive blade wear etc.**

In a rainy day if the windshield glass gets dry when driving through a long tunnel, the wiping velocity may reduce to protect the motor and blade. It will return to its normal state, after passing through the tunnel.

In case of overload the wiper motor that the function adjusts speed automatically in vehicle. This feature prevents damage to the wiper motor and blade. In case of removal overload conditions, it will return to its normal position. By the pressure of the wind at high speed wiper blades can be moved upwards. This prevents damage due to wiper motor overload by the pressure of the wind.
Operating the wiper blade and wiper switch operates normally, it will return to its normal position.

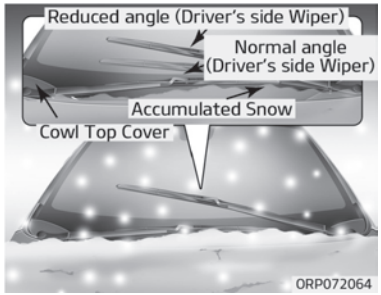

When the operation of the passenger's side wiper blade is limited by accumulated snow on the cowl top cover, operating angle of the driver's side wiper blade will be reduced to avoid collision between the wiper blades. Operating under a reduced angle, the driver's side blade stop position will be different.

✻ NOTICE

If you do not remove the snow and/or ice before using the wiper and washer, it may damage the wiper and washer system.

Windshield washers (front)

■ Type A

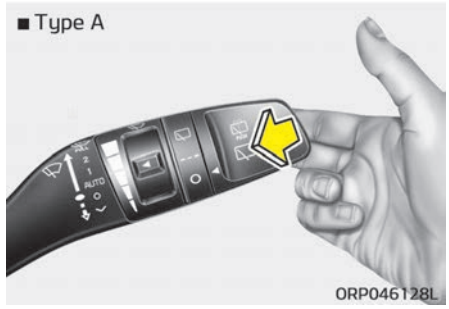

■ Type B

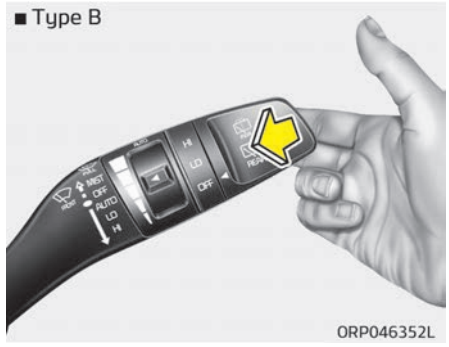

In the 0 (Off) position, pull the lever gently toward you to spray washer fluid on the windshield and to run the wipers 1-3 cycles.

Use this function when the windshield is dirty.
The spray and wiper operation will continue until you release the lever.
If the washer does not work, check the washer fluid level. If the fluid level is not sufficient, you will need to add appropriate non-abrasive windshield washer fluid to the washer reservoir.
The reservoir filler neck is located in the front of the engine compartment on the passenger side.

⚠ CAUTION

To prevent possible damage to the washer pump, do not operate the washer when the fluid reservoir is empty.

⚠ WARNING

Do not use the washer in freezing temperatures without first warming the windshield with the defrosters; the washer solution could freeze on the windshield and obscure your vision.

⚠ CAUTION

- **To prevent possible damage to the wipers or windshield, do not operate the wipers when the windshield is dry.**
- **To prevent damage to the wiper blades, do not use gasoline, kerosene, paint thinner, or other solvents on or near them.**
- **To prevent damage to the wiper arms and other components, do not attempt to move the wipers manually.**
- **To prevent possible damage to the wipers and washer system, use anti-freezing washer fluids in the winter season or cold weather.**

Headlight washer (if equipped)



If your vehicle is equipped with the headlight washer it will operate at the same time when you operate the windshield washer. It will operate when the headlight switch is in the first or second position and the ignition switch or engine start/stop button is in the ON position.
The washer fluid will be sprayed on to the headlights.

✻ NOTICE

- Check the headlight washers periodically to confirm that the washer fluid is being sprayed properly onto the headlight lenses.
- The headlight washer can be operated 15 minutes after being operated last time.

Rear window wiper and washer switch

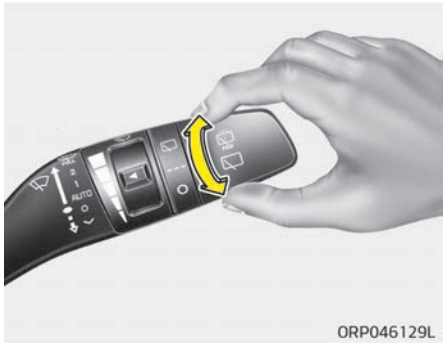

The rear window wiper and washer switch is located at the end of the wiper and washer switch lever. Turn the switch to the desired position to operate the rear wiper and washer.

HI/ - High wiper speed

LO/--- - Low wiper speed

OFF/O - Wiper is not in operation

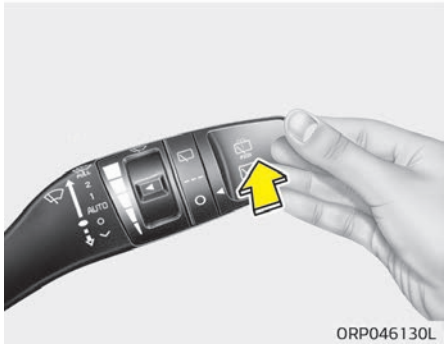

Push the lever away from you to spray rear washer fluid and to run the rear wipers 1~3 cycles. The spray and wiper operation will continue until you release the lever.

INTERIOR LIGHT

⚠ CAUTION

Do not use the interior lights for extended periods when the engine is not running.
It may cause battery discharge.

⚠ WARNING

Do not use the interior lights when driving in the dark. Accidents could happen because the view may be obscured by interior lights.

Interior lamp AUTO cut

- When all entrances are closed, if you lock the vehicle by using the transmitter or the smart key, all interior lamp will be off after a few seconds.
- If you do not operate anything in the vehicle after turning off the engine, the lights will turn off after 20 minutes.

Map lamp

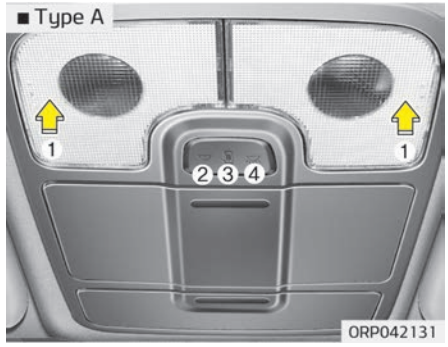

Press the lens (1) to turn the map lamp on or off

- (2): The lamps are off even if a door is opened.
- (3):
  - The map lamp comes on when a door is opened. If you close the door, the lamps go out after approximately 30 seconds.
  - The map lamp comes on for approximately 30 seconds when doors are unlocked with a transmitter or smart key as long as the doors are not opened.
  - The map lamp will stay on for approximately 20 minutes if a door is opened with the ignition switch in the ACC or LOCK/OFF position.
  - The map lamp will stay on continuously if the door is opened with the ignition switch in the ON position.
  - The map lamp will go out immediately if the ignition switch is changed to the ON position or all doors are locked.
- (4): The map lamp stays on at all times.

✻ NOTICE

When the lamp is turned on by pressing the lens (1), the lamp does not turn off even if the switch is in the OFF position (2).

Room lamp

■ Type A

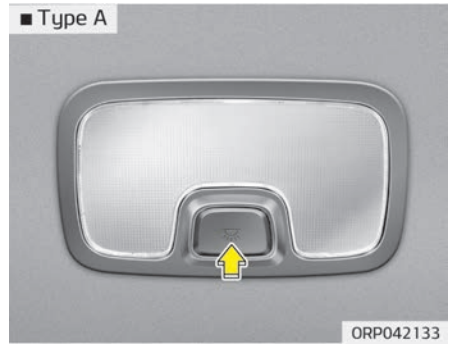

■ Type B

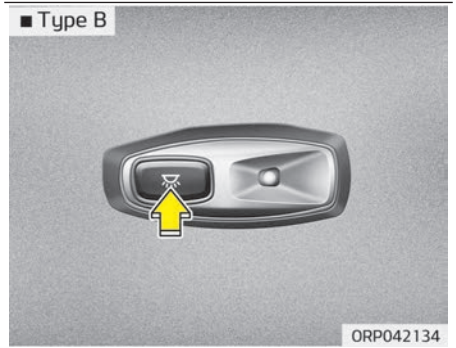

Press the button to turn the light on or off.

If the map lamp turns on by the map lamp switch, the room lamp will turn on.

Vanity mirror lamp (if equipped)



Push the switch to turn the light on or off.

- : The lamp will turn on if this button is pressed.
- : The lamp will turn off if this button is pressed.

⚠ CAUTION

■ Vanity mirror lamp

Always have the switch in the off position when the vanity mirror lamp is not in use. If the sunvisor is closed without the lamp off, it may discharge the battery or damage the sunvisor.

Luggage room lamp

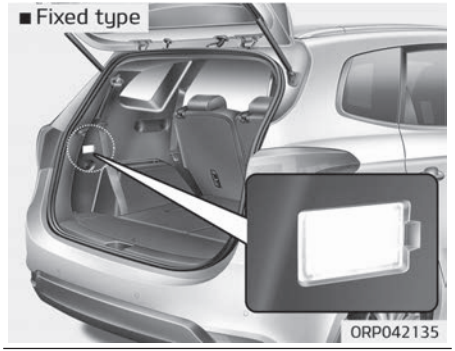

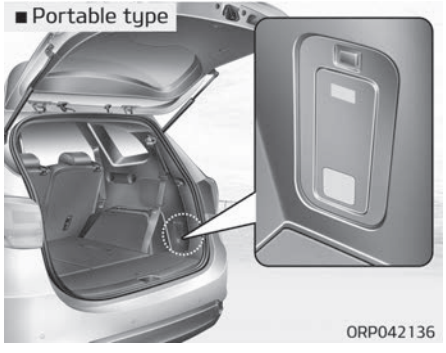

The luggage room lamp comes on when the tailgate is opened.

WELCOME SYSTEM (IF EQUIPPED)

Headlamp welcome

When the headlight (light switch in the headlight or AUTO position) is on and all doors (and tailgate) are locked and closed, the headlight, position light and tail light will come on for 15 seconds if any of the below is performed.

- Without smart key system
  - When the door unlock button is pressed on the transmitter.
- With the smart key system
  - When the door unlock button is pressed on the smart key.

At this time, if you press the door lock button (on the transmitter or smart key), the lights will turn off immediately.

Interior light

When the interior light switch is in the DOOR position and all doors (and tailgate) are locked and closed, the room lamp will come on for 30 seconds if any of the below is performed.

- Without smart key system
  - When the door unlock button is pressed on the transmitter.
- With the smart key system
  - When the door unlock button is pressed on the smart key.
  - When the button of the outside door handle is pressed.

At this time, if you press the door lock button, the lamps will turn off immediately.

Puddle lamp (if equipped)

When all doors are locked and closed, the puddle lamp will come on for 15 seconds if any of the below is performed.

- Without smart key system
  - When the door unlock button is pressed on the transmitter.
- With the smart key system
  - When the door unlock button is pressed on the smart key.
  - When the button of the outside door handle is pressed.
  - When the vehicle is approached with the smart key in possession.

At this time, if you press the door lock button, the lamps will turn off immediately.

DEFROSTER

⚠ CAUTION

To prevent damage to the conductors bonded to the inside surface of the rear window, never use sharp instruments or window cleaners containing abrasives to clean the window.

✻ NOTICE

If you want to defrost and defog the front windshield, refer to "Windshield defrosting and defogging" on page 4-139.

Rear window defroster

■ Manual climate control



ORP042138

■ Automatic climate control

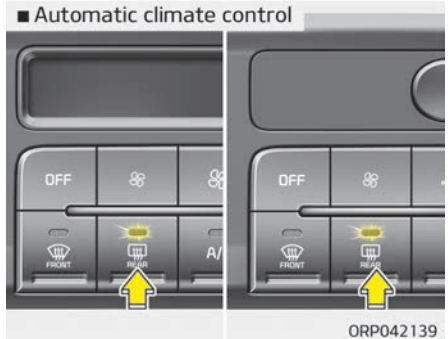

ORP042139

The defroster heats the window to remove frost, fog and thin ice from the interior and exterior of the rear window, while engine is running.

- To activate the rear window defroster, press the rear window defroster button located in the center facia switch panel. The indicator on the rear window defroster button illuminates when the defroster is ON.
- To turn off the defroster, press the rear window defroster button again.

✻ NOTICE

- If there is heavy accumulation of snow on the rear window, brush it off before operating the rear defroster.
- The rear window defroster automatically turns off after approximately 20 minutes or when the ignition switch is turned off.

Outside mirror defroster (if equipped)

The outside mirror defroster will operate at the same time you turn on the rear window defroster.

Front wiper deicer (if equipped)

The front wiper deicer will operate at the same time you turn on the rear window defroster.

CLIMATE CONTROL SYSTEM

System operation

Ventilation

1. Set the mode to the position.
2. Set the air intake control to the outside (fresh) air position.
3. Set the temperature control to the desired position.
4. Set the fan speed control to the desired speed.

Heating

1. Set the mode to the position.
2. Set the air intake control to the outside (fresh) air position.
3. Set the temperature control to the desired position.
4. Set the fan speed control to the desired speed.
5. If dehumidified heating is desired, turn the air conditioning system on.

- If the windshield fogs up, set the mode to the position.

Operation tips

- To keep dust or unpleasant fumes from entering the vehicle through the ventilation system, temporarily set the air intake control to the recirculated air position. Be sure to return the control to the fresh air position when the irritation has passed to keep fresh air in the vehicle. This will help keep the driver alert and comfortable.
- Air for the heating/cooling system is drawn in through the grilles just ahead of the windshield. Care should be taken that these are not blocked by leaves, snow, ice or other obstructions.
- To prevent interior fog on the windshield, set the air intake control to the fresh air position and fan speed to the desired position, turn on the air conditioning system, and adjust the temperature control to desired temperature.

Air conditioning (if equipped)

Kia Air Conditioning Systems are filled with environmentally friendly refrigerant*.

1. Start the engine. Push the air conditioning button.
2. Set the mode to the position.
3. Set the air intake control to the outside air or recirculated air position.
4. Adjust the fan speed control and temperature control to maintain maximum comfort.

⚠ CAUTION

- **The refrigerant system should only be serviced by trained and certified technicians to insure proper and safe operation.**
- **The refrigerant system should be serviced in a well-ventilated place.**

(Continued)

*: Your vehicle is filled with R-134a or R-1234yf according to the regulation in your country at the time of producing. You can find out which air conditioning refrigerant is applied to your vehicle at the label inside of hood. Refer to “Refrigerant label” on page 9-20 for more detail location of air conditioning refrigerant label.

(Continued)

- **The air conditioning evaporator (cooling coil) shall never be repaired or replaced with one removed from a used or salvaged vehicle and new replacement MAC evaporators shall be certified (and labeled) as meeting SAE Standard J2842.**

✻ NOTICE

- When using the air conditioning system, monitor the temperature gauge closely while driving up hills or in heavy traffic when outside temperatures are high. Air conditioning system operation may cause engine overheating. Continue to use the blower fan but turn the air conditioning system off if the temperature gauge indicates engine overheating.

(Continued)

(Continued)

- When opening the windows in humid weather air conditioning may create water droplets inside the vehicle. Since excessive water droplets may cause damage to electrical equipment, air conditioning should only be used with the windows closed.

Air conditioning system operation tips

- If the vehicle has been parked in direct sunlight during hot weather, open the windows for a short time to let the hot air inside the vehicle escape.
- Use air conditioning to reduce humidity and moisture inside the vehicle on rainy or humid days.
- During air conditioning system operation, you may occasionally notice a slight change in engine speed as the air conditioning compressor cycles. This is a normal system operation characteristic.
- Use the air conditioning system every month only for a few minutes to ensure maximum system performance.
- When using the air conditioning system, you may notice clear water dripping (or even puddling) on the ground under the passenger side of the vehicle. This is a normal system operation characteristic.
- Operating the air conditioning system in the recirculated air position provides maximum cooling, however, continual operation in this mode may cause the air inside the vehicle to become stale.
- During cooling operation, you may occasionally notice a misty air flow because of rapid cooling and humid air intake. This is a normal system operation characteristic.

Climate control air filter

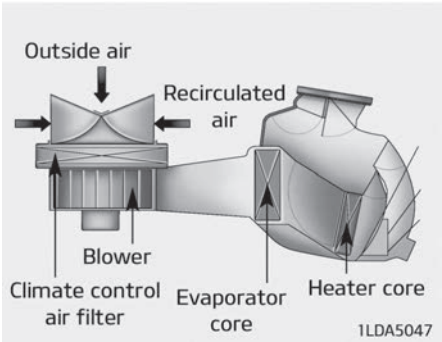

The climate control air filter installed behind the glove box filters the dust or other pollutants that come into the vehicle from the outside through the heating and air conditioning system. If dust or other pollutants accumulate in the filter over a period of time, the air flow from the air vents may decrease, resulting in moisture accumulation on the inside of the windshield even when the outside (fresh) air position is selected. If this happens, have the climate control air filter replaced by a professional workshop. Kia recommends to visit an authorized Kia dealer/service partner.

✻ NOTICE

- Replace the filter according to the "Maintenance schedule" on page 8-09.
  If the vehicle is being driven in severe conditions such as dusty, rough roads, more frequent climate control air filter inspections and changes are required.
- When the air flow rate suddenly decreases, have the system checked by a professional workshop. Kia recommends to visit an authorized Kia dealer/service partner.

Checking the amount of air conditioner refrigerant and compressor lubricant

When the amount of refrigerant is low, the performance of the air conditioning is reduced. Overfilling also has a bad influence on the air conditioning system. Therefore, if abnormal operation is found, have the system inspected by a professional workshop.
Kia recommends to visit an authorized Kia dealer/service partner.

⚠ WARNING

■ Vehicles equipped with R-134a*

Because the refrigerant is at very high pressure, the air conditioning system should only be serviced by trained and certified technicians.

It is important that the correct type and amount of oil and refrigerant is used.
Otherwise, it may cause damage to the vehicle and personal injury.

*: Your vehicle is filled with R-134a or R-1234yf according to the regulation in your country at the time of producing. You can find out which air conditioning refrigerant is applied your vehicle at the label inside of hood. Refer to "Refrigerant label" on page 9-20 for a more detailed location of air conditioning refrigerant label.

⚠ WARNING

■ **Vehicles equipped with R-1234yf***



Because the refrigerant is mildly inflammable and at very high pressure, the air conditioning system should only be serviced by trained and certified technicians.

It is important that the correct type and amount of oil and refrigerant is used.
Otherwise, it may cause damage to the vehicle and personal injury.

*: Your vehicle is filled with R-134a or R-1234yf according to the regulation in your country at the time of producing. You can find out which air conditioning refrigerant is applied your vehicle at the label inside of hood. Refer to "Refrigerant label" on page 9-20 for a more detailed location of air conditioning refrigerant label.

Manual climate control system (if equipped)



ORP042140

System overview

1. Fan speed control knob
2. Air conditioning button
3. Rear window defroster button
4. Mode selection button
5. Air intake control button
6. Temperature control knob
7. Front windshield defroster button

⚠ CAUTION

Operating the blower when the ignition switch is in the ON position could cause the battery to discharge. Operate the blower when the engine is running.

Heating and air conditioning

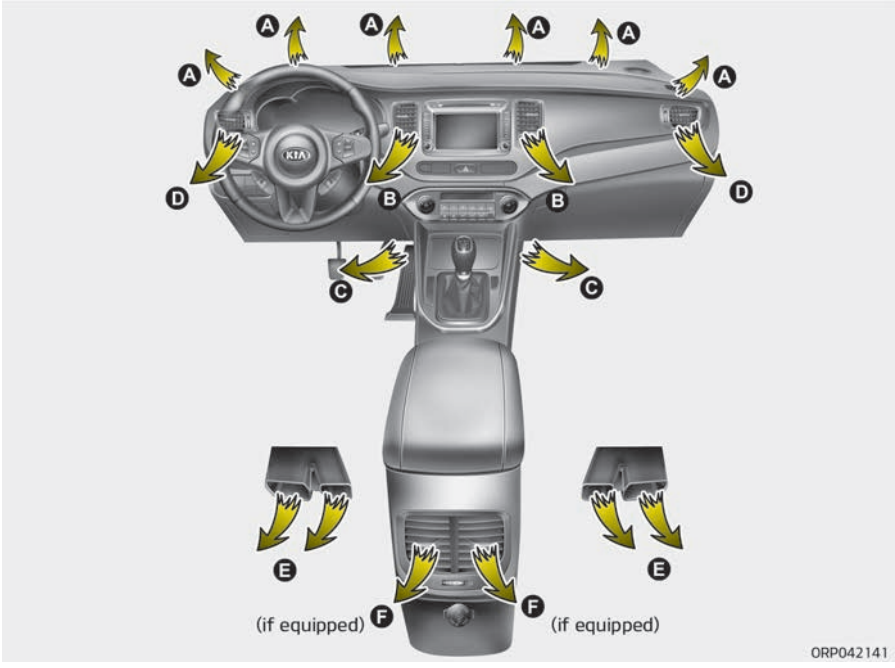

1. Start the engine.
2. Set the mode to the desired position.
   To improve the effectiveness of heating and cooling:
   1. Heating:
   2. Cooling:
3. Set the temperature control to the desired position.
4. Set the air intake control to the outside (fresh) air position.
5. Set the fan speed control to the desired speed.
6. If air conditioning is desired, turn the air conditioning system on. (if equipped)

Mode selection



The mode selection buttons control the direction of the air flow through the ventilation system.
Air can be directed to the floor, dashboard outlets, or windshield. Three symbols are used to represent Face, Floor and Defrost air position.

Face-Level (B, D, F *)

*: if equipped

Air flow is directed toward the upper body and face. Additionally, each outlet can be controlled to direct the air discharged from the outlet.

Floor-Level (A, C, D, E)

Most of the air flow is directed to the floor, with a small amount of the air being directed to the windshield and side window defrosters.

Defrost-Level (A, D)

Most of the air flow is directed to the windshield.
Also you may select 2~3 modes at the same time for desired air flow.

- face ( ) + floor ( ) mode
- face ( ) + defrost ( ) mode
- floor ( ) + defrost ( ) mode
- face ( ) + floor ( ) + defrost ( ) mode

Instrument panel vents

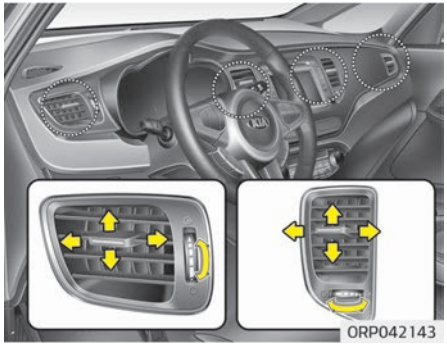

The outlet vents can be opened or closed separately using the thumbwheel or vent control lever.
Also, you can adjust the direction of air delivery from these vents using the vent control lever as shown.

Temperature control

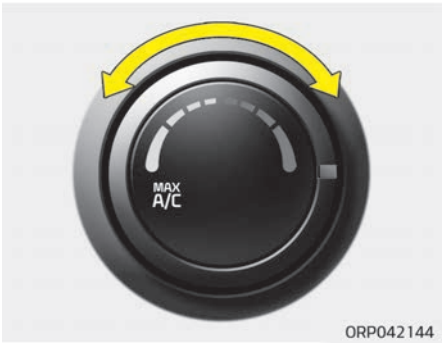

The temperature control knob allows you to control the temperature of the airflow in the vehicle.
To change the temperature:

- Turn the knob to the right to increase temperature.
- Turn the knob to the left to decrease temperature.

Air intake control



The air intake control is used to select the outside (fresh) air position or recirculated air position.
To change the air intake control position, press the control button.

Recirculated air position



With the recirculated air position selected, air from the passenger compartment will be drawn through the heating system and heated or cooled according to the function selected.

Outside (fresh) air position



With the outside (fresh) air position selected, air enters the vehicle from outside and is heated or cooled according to the function selected.

✻ NOTICE

Prolonged operation of the heater in the recirculated air position (without air conditioning selected) may cause fogging of the windshield and side windows and the air within the passenger compartment may become stale.
In addition, prolonged use of the air conditioning with the recirculated air position selected will result in excessively dry air in the passenger compartment.

⚠ WARNING

- **The continuous use of recirculated air in the climate control system may increase humidity inside the vehicle, causing the glass to fog and obscuring visibility.**
- **Do not sleep in a vehicle with the air conditioning or heating system on. It may cause serious harm or death due to a drop in the oxygen level and/or body temperature.**
- **The continuous use of recirculated air in the climate control system can produce drowsiness or sleepiness, which may result in a loss of vehicle control. Set the air intake control to the outside (fresh) air position as much as possible while driving.**

Fan speed control



The ignition switch must be in the ON position for fan operation.
The fan speed control knob allows you to control the fan speed of the air flowing from the ventilation system. To change the fan speed, turn the knob to the right for higher speed or left for lower speed.

To turn off the blowers



To turn off the blowers, turn the fan speed control knob to the “0” position.

Air conditioning (if equipped)



Press the A/C button to turn the air conditioning system on (indicator light will illuminate). Press the button again to turn the air conditioning system off.

Automatic climate control system (if equipped)

■ Type A



■ Type B



ORP046348L/ORP046322L

System overview

1. Driver's temperature control knob
2. AUTO (automatic control) button
3. Fan speed control button (Higher speed)
4. Fan speed control button (Lower speed)
5. Climate control display
6. Air conditioning button
7. Air intake control button
8. Passenger's temperature control knob
9. Dual temperature control selection button
10. OFF button
11. Front windshield defroster button
12. Mode selection button
13. Rear window defroster button
14. Climate control information screen selection button

⚠ CAUTION

Operating the blower when the ignition switch is in the ON position could cause the battery to discharge. Operate the blower when the engine is running.

Automatic heating and air conditioning

The automatic climate control system is controlled by simply setting the desired temperature.



1. Press the AUTO button.
   The modes, fan speeds, air intake and air-conditioning will be controlled automatically according to the temperature setting.

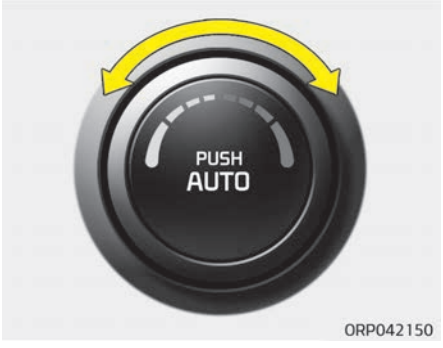

2. Turn the temperature control knob to set the desired temperature.

✻ NOTICE

- To turn the automatic operation off, select any button of the following:
  - Mode selection button
  - Air conditioning button (Except Europe)

(Continued)

(Continued)

  - Front windshield defrost button (Press the button one more time to deselect the front windshield defroster function. The 'AUTO' sign will illuminate on the information display once again.)
  - Fan speed control button

  The selected function will be controlled manually while other functions operate automatically.
- For your convenience and to improve the effectiveness of the climate control, use the AUTO button and set the temperature to 22 °C/71 °F (23 °C/73 °F - except Europe).

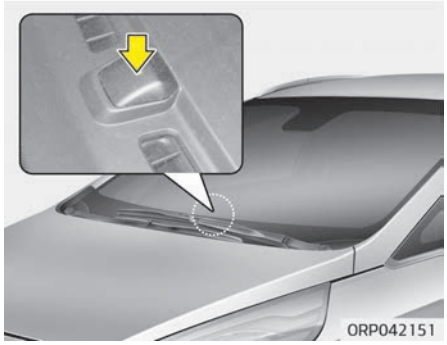

✻ NOTICE

Placing any object over the sensor on the instrument panel may interfere with the heating and cooling system.

Manual heating and air conditioning

The heating and cooling system can be controlled manually by pressing buttons or turning knob(s) other than the AUTO button. In this case, the system works sequentially according to the order of buttons or knob(s) selected.

1. Start the engine.
2. Set the mode to the desired position.
   To improve the effectiveness of heating and cooling:
   - Heating:
   - Cooling:
3. Set the temperature control to the desired position.
4. Set the air intake control to the outside (fresh) air position.
5. Set the fan speed control to the desired speed.
6. If air conditioning is desired, turn the air conditioning system on.

Press the AUTO button in order to convert to full automatic control of the system.

Mode selection

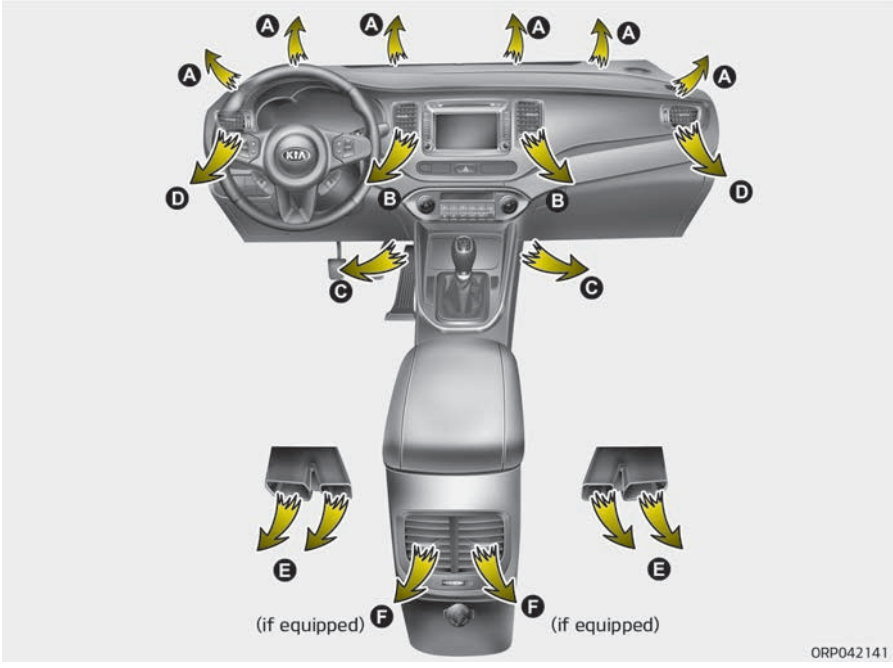

The mode selection button controls the direction of the airflow in the vehicle.
If you push the button once, the corresponding switch will turn on, and if you push the button again, the switch will turn off.

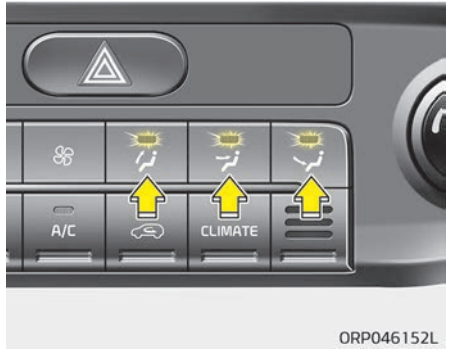

Face-Level (B, D, F *)

*:if equipped

Air flow is directed toward the upper body and face. Additionally, each outlet can be controlled to direct the air discharged from the outlet.

Floor-Level (A, C, D, E)

Most of the air flow is directed to the floor.

Defrost-Level (A, D)

Most of the air flow is directed to the windshield.
Also you may select 2~3 modes at the same time.

- face () + floor () mode
- face () + defrost () mode
- floor () + defrost () mode
- face () + floor () + defrost () mode

Instrument panel vents

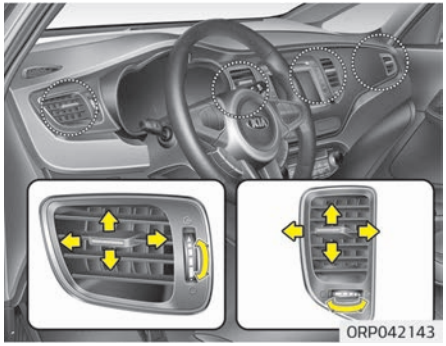

The outlet vents can be opened or closed separately using the thumb-wheel or vent control lever.
Also, you can adjust the direction of air delivery from these vents using the vent control lever as shown.

Temperature control



The temperature will increase to the maximum (HI) by turning the knob to the right extremely.
The temperature will decrease to the minimum (Lo) by turning the knob to the left extremely.
When turning the knob, the temperature will increase or decrease by 0.5 °C/1 °F. When set to the lowest temperature setting, the air conditioning will operate continuously.
Operate the driver's side temperature control to adjust the driver side temperature. Operate the passenger's side temperature control to adjust the passenger side temperature.



Adjusting the driver and passenger side temperature equally

- Press the "SYNC" button to adjust the driver and passenger side temperature equally.
  The passenger side temperature will be set to the same temperature as the driver side temperature.
- Turn the driver side temperature control knob. The driver and passenger side temperature will be adjusted equally.

Adjusting the driver and passenger side temperature individually

- Press the "SYNC" button again to adjust the driver and passenger side temperature individually. The illumination of button turns off.
- Operate the driver side temperature control knob to adjust the driver side temperature.
- Operate the passenger side temperature control knob to adjust the passenger side temperature.

Temperature conversion

You can switch the temperature mode between Centigrade to Fahrenheit as follows:
While pressing the OFF button, press the AUTO button for 3 seconds or more.
The display will change from Centigrade to Fahrenheit, or from Fahrenheit to Centigrade.

✻ NOTICE

- If the battery has been discharged or disconnected, the temperature mode display will reset to Centigrade.
- If you re-connect the battery after it has been completely discharged or after it has been disconnected from the vehicle, the system will be initiated and the display will first show 22°C on the screen which is the initial setting.

Air intake control



This is used to select the outside (fresh) air position or recirculated air position.
To change the air intake control position, push the control button.

Recirculated air position

- Type A, B



With the recirculated air position selected, air from the passenger compartment will be drawn through the heating system and heated or cooled according to the function selected.

Outside (fresh) air position

- Type A



- Type B



With the outside (fresh) air position selected, air enters the vehicle from outside and is heated or cooled according to the function selected.

✻ NOTICE

Prolonged operation of the heater in the recirculated air position (without air conditioning selected) may cause fogging of the windshield and side windows and the air within the passenger compartment may become stale.
In addition, prolonged use of the air conditioning with the recirculated air

(Continued)

(Continued)

position selected will result in excessively dry air in the passenger compartment.

⚠ WARNING

- **The continuous use of recirculated air in the climate control system may increase humidity inside the vehicle, causing the glass to fog and obscuring visibility.**
- **Do not sleep in a vehicle with the air conditioning or heating system on. It may cause serious harm or death due to a drop in the oxygen level and/or body temperature.**
- **The continuous use of recirculated air in the climate control system can produce drowsiness or sleepiness, which may result in a loss of vehicle control. Set the air intake control to the outside (fresh) air position as much as possible while driving.**

Fan speed control



The fan speed can be set to the desired speed by pressing the fan speed control button.
To change the fan speed, press the upper button (✤) for higher speed, or press the lower button (✤) for lower speed.
Pressing the OFF button turns off the fan.

Air conditioning (if equipped)



Press the A/C button to turn the air conditioning system on (indicator light will illuminate).
Press the button again to turn the air conditioning system off.

OFF mode



Press the OFF button to turn off the air climate control system. However, you can still operate the air intake buttons as long as the ignition switch is in the ON position.

Climate information screen selection (for type B)



Press the climate information screen selection button to display climate information on the screen.

WINDSHIELD DEFROSTING AND DEFOGGING

⚠ WARNING

■ Windshield heating

Do not use the position during cooling operation in extremely humid weather. The difference between the temperature of the outside air and the windshield could cause the outer surface of the windshield to fog up, causing loss of visibility. In this case, set the mode selection to the position and fan speed control to the lower speed.

- For maximum defrosting, set the temperature control to the hottest position and the fan speed control to the highest speed.
- If warm air to the floor is desired while defrosting or defogging, set the mode to the floor-defrost position.
- Before driving, clear all snow and ice from the windshield, rear window, outside rear view mirrors, and all side windows.
- Clear all snow and ice from the hood and air inlet in the cowl grill to improve heater and defroster efficiency and to reduce the probability of fogging up the inside of the windshield.

Manual climate control system

To defog inside windshield

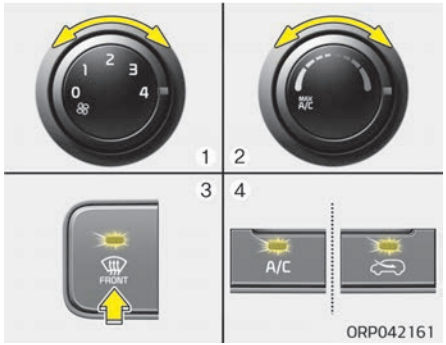

1. Set the fan speed to the desired position.
2. Select desired temperature.
3. Press the button.
4. The outside (fresh) air will be selected automatically. If the position is selected, air conditioning (if equipped) will also be selected automatically.

If the air conditioning and/or outside (fresh) air position are not selected automatically, press the corresponding button manually.

To defrost outside windshield



1. Set the fan speed to the highest position.
2. Set the temperature to the hottest position.

3. Press the button.
4. The outside (fresh) air and air conditioning will be selected automatically.

Automatic climate control system

To defog inside windshield

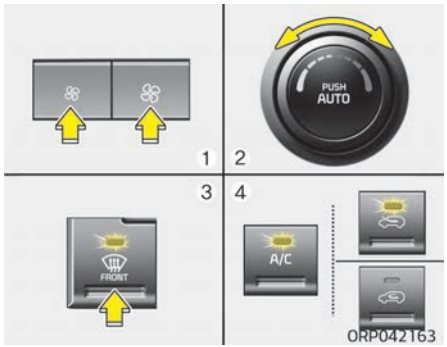

1. Set the fan speed to the desired speed.
2. Select desired temperature.
3. Press the button.
4. The air conditioning will turn on according to the detected ambient temperature and outside (fresh) air position will be selected automatically.

If the air conditioning is not selected automatically, adjust the corresponding button manually. If the position is selected, lower fan speed is adjusted to a higher fan speed.

To defrost outside windshield

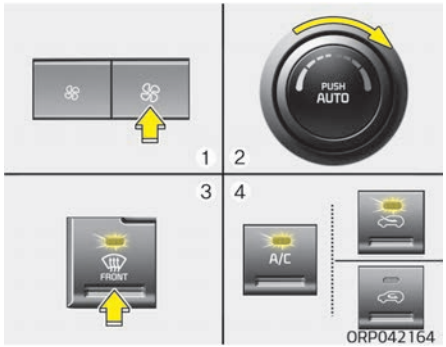

1. Set the fan speed to the highest position.
2. Set the temperature to the hottest (HIGH) position.
3. Press the button.
4. The air conditioning will turn on according to the detected ambient temperature and outside (fresh) air position will be selected automatically.

Auto defogging system (Only for automatic climate control system, if equipped)

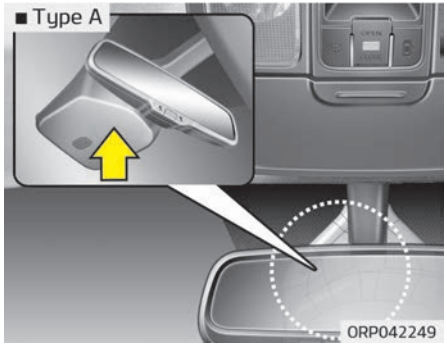

Auto defogging reduces the possibility of fogging up the inside of the windshield by automatically sensing the moisture of inside the windshield.
The auto defogging system operates when the climate control system is on.

✻ NOTICE

The auto defogging system may not operate normally, when the outside temperture is below -15 °C.



This indicator illuminates when the auto defogging system senses the moisture of inside the windshield and operates.

If more moisture is in the vehicle, higher steps operate as follow.

Step 1: Operating the air conditioning

Step 2: Blowing air flow toward the windshield

Step 3: Outside air position

Step 4: Increasing air flow toward the windshield

If your vehicle is equipped with the auto defogging system, it is automatically activated when the conditions are met.
To cancel or reset the Auto Defogging system, press the front windshield defroster button for 3 seconds when the ignition switch is in the ON position. When the Auto Defogging System is Canceled, ADS OFF symbol will blink 3 times and the ADS OFF will be displayed on the climate control information screen. When the Auto Defogging System is reset, ADS OFF symbol will blink 6 times without a signal.
In case of an automatic climate control system with a climate button, the defroster button indicator will blink.
To use the auto defogging system again, follow the procedures mentioned above.
If the battery has been disconnected or discharged, it resets to the auto defogging status.

✻ NOTICE

If the A/C off is manually selected while the auto defogging system is on, the auto defogging indicator will

(Continued)

(Continued)

blink 3 times to give notice that the A/C off can not be selected.

⚠ CAUTION

Do not remove the sensor cover located on the upper end of the driver side windshield glass. Damage to the system parts could occur and may not be covered by your vehicle warranty.

CLEAN AIR (IF EQUIPPED)



When the ignition switch is in the ON position, the clean air function turns on automatically.
Also, the clean air function turns off automatically, when the ignition switch turns to the OFF position.

STORAGE COMPARTMENT

⚠ CAUTION

- **To avoid possible theft, do not leave valuables in the storage compartment.**
- **Always keep the storage compartment covers closed while driving. Do not attempt to place so many items in the storage compartment that the storage compartment cover cannot close securely.**

⚠ WARNING

■ Flammable materials

Do not store cigarette lighters, propane cylinders, or other flammable/explosive materials in the vehicle. These items may catch fire and/or explode if the vehicle is exposed to hot temperatures for extended periods.

Center console storage

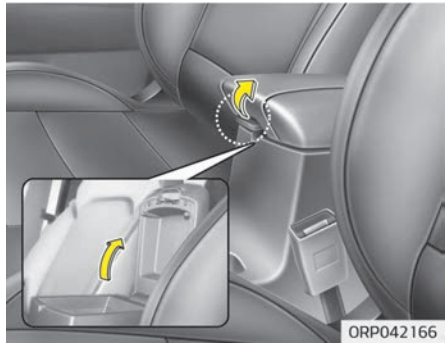

To open the center console storage, push the lever and then lift up the cover.

Glove box

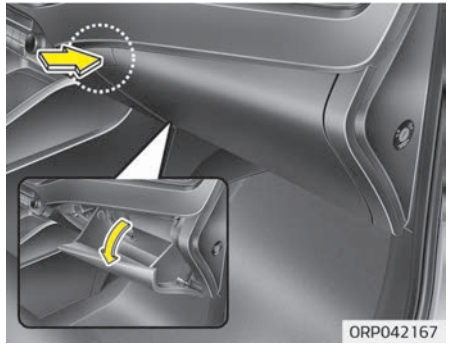

To open the glove box, push the button and the glove box will automatically open. Close the glove box after use.

⚠ WARNING

To reduce the risk of injury in an accident or sudden stop, always keep the glove box door closed while driving.

⚠ CAUTION

Do not keep food in the glove box for a long time.

Cool box (if equipped)

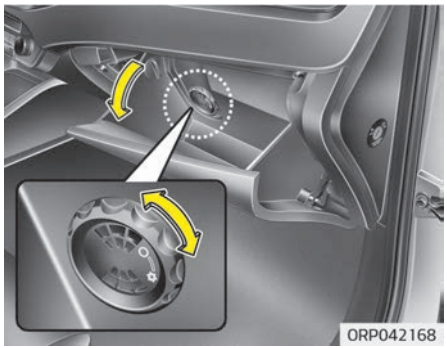

You can keep beverage cans or other items cool in the glove box.

1. Turn on the air conditioning. The temperature of the cool box will change according to the temperature of air conditioning.
2. Turn the knob to the open position.
3. When the cool box is not used, turn the knob to the close position.

✻ NOTICE

If some items in the cool box block the vent, the cooling effectiveness of the cool box is reduced.

⚠ WARNING

Do not put perishable food in the cool box because it may not maintain the necessary consistent temperature to keep the food fresh.

Sunglass holder (if equipped)



To open the sunglass holder, press the cover and the holder will slowly open. Place your sunglasses in the compartment door with the lenses facing out. Push to close.

⚠ WARNING

- **Do not keep objects except sunglasses inside the sunglass holder. Such objects can be thrown from the holder in the event of a sudden stop or an accident, possibly injuring the passengers in the vehicle.**
- **Do not open the sunglasses holder while the vehicle is moving. The rear view mirror of the vehicle can be blocked by an open sunglass holder.**
- **Do not put the glasses forcibly into a sunglass holder to prevent breakage or deformation of the glasses. It may cause personal injury if you try to open it forcibly when the glasses are jammed in the holder.**

Luggage tray

■ Type A

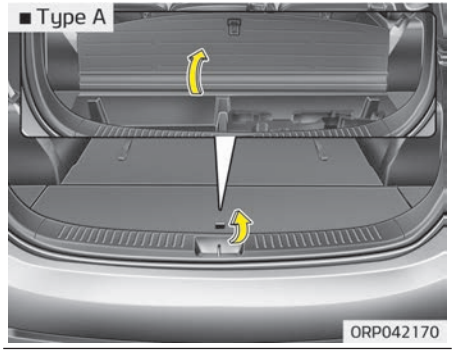

■ Type B

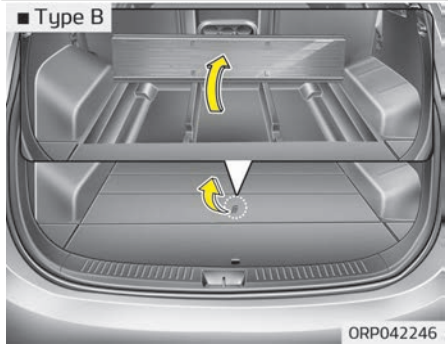

You can place a first aid kit, a reflector triangle (front tray), tools, etc. in the box for easy access.

- Grasp the handle on the top of the cover and lift it.

Floor under tray (if equipped)

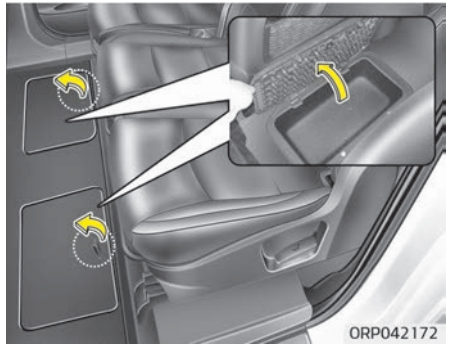

The floor under tray can be used for storing small items. Grasp the handle on top of the cover and lift it.

Cigarette lighter (if equipped)

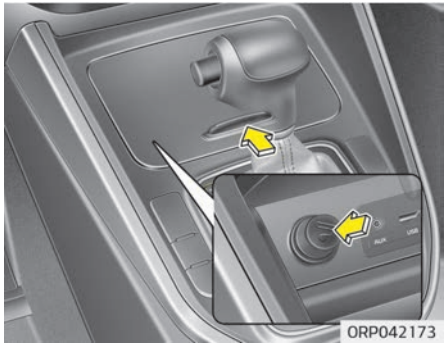

For the cigarette lighter to work, the ignition switch must be in the ACC position or the ON position.
To use the cigarette lighter:
Push the lighter all the way into the socket.
When the element has heated, the lighter will pop out to the "ready" position.
Kia recommends to use parts for replacement from an authorized Kia dealer/service partner.

⚠ WARNING

- **Holding the lighter in after it is heated will cause it to overheat.**
- **If the lighter does not pop out within 30 seconds, remove it to prevent overheating.**
- **Do not insert foreign objects into the socket of the cigarette lighter. It may damage the cigarette lighter.**

⚠ CAUTION

The use of plug-in accessories (shavers, hand-held vacuums, and coffee pots, etc.) may damage the socket or cause electrical failure.

Ashtray (if equipped)

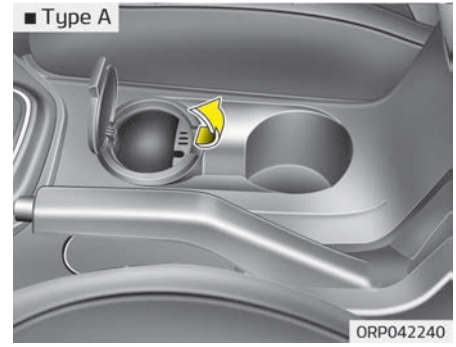

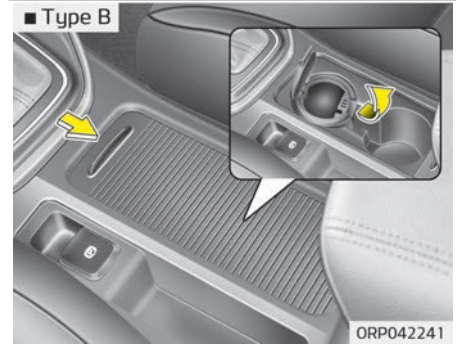

To use the ashtray, open the cover.

To clean or empty the ashtray, pull it out.

⚠ WARNING

■ Ashtray use

- **Do not use the vehicle's ashtray as a waste receptacle.**
- **Putting lit cigarettes or matches in an ashtray with other combustible materials may cause a fire.**

⚠ CAUTION

When cleaning spilled liquid, do not dry the cup holder at high temperatures. This may damage the chrome part of the cup holder.

Cup holder

⚠ WARNING

■ Hot liquids

(Continued)

(Continued)

- **Do not place uncovered cups of hot liquid in the cup holder while the vehicle is in motion. If the hot liquid spills, you may burn yourself. Such a burn to the driver could lead to loss of control of the vehicle.**
- **To reduce the risk of personal injury in the event of sudden stop or collision, do not place uncovered or unsecured bottles, glasses, cans, etc., in the cup holder while the vehicle is in motion.**

⚠ WARNING

Keep cans and bottles out of direct sunlight. Placing them in a hot vehicle can cause them to explode.

✻ NOTICE

- Keep your drinks sealed while driving to prevent spilling your drink. If liquid spills, it may get into the vehicle's electrical/electronic system and damage electrical/electronic parts.
- When cleaning spilled liquids, do not dry the cup holder at high temperature. This may damage the cup holder.

■ Type A

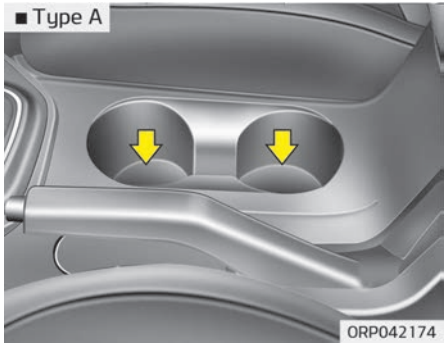

■ Type B

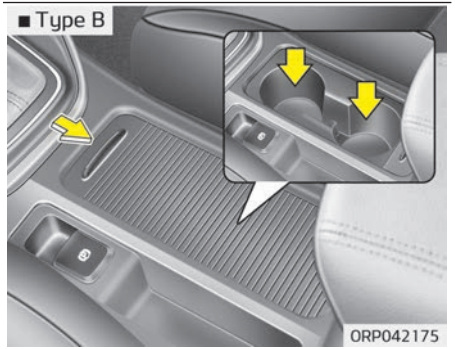

Cups or small beverage cans may be placed in the cup holders.
Type B
To use the cup holder, open the cover.

Rear

■ Type A

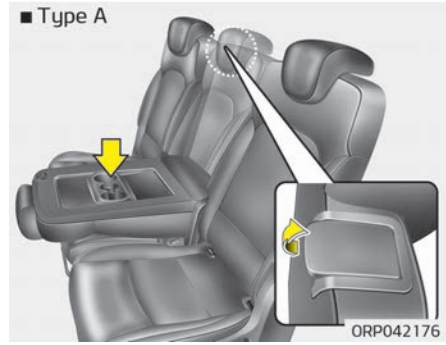

■ Type B

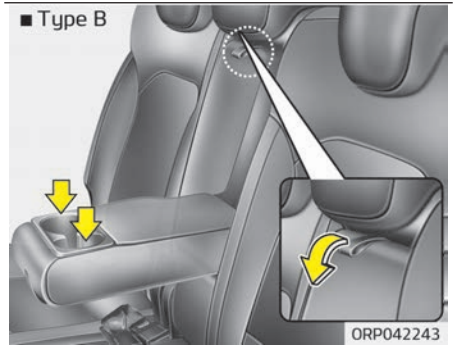

To use the cup holder, folding the center seat or pull down the armrest.

Bottle holder

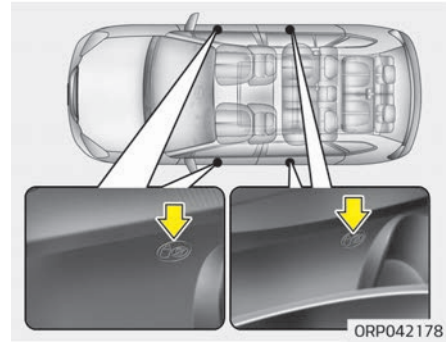

Bottles may be placed in the holder.

Seat warmer (if equipped)

■ For front seat

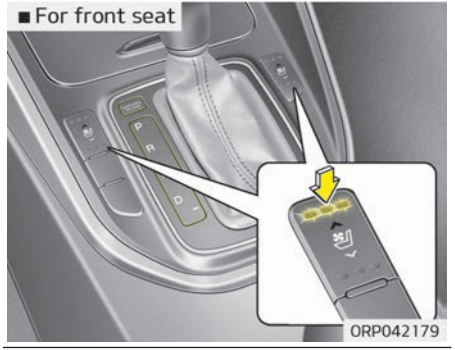

ORP042179

■ For rear seat



ORP042180

The seat warmer is provided to warm the front seats during cold weather. With the ignition switch in the ON position, push the switch to warm the seat. During mild weather or under conditions where the operation of the seat warmer is not needed, keep the switches in the "OFF" position.

- Each time you press the switch, the temperature setting of the seat will change as follows:
  - Front seat



  - Rear seat
- When pressing the switch for more than 1.5 seconds with the seat warmer operating, the seat warmer will turn OFF.
- The seat warmer defaults to the OFF position whenever the engine start/stop button is turned on.

✻ NOTICE

With the seat warmer switch in ON position, the heating system in the seat turns off or on automatically depending on the seat temperature.

⚠ CAUTION

■ Seat damage

- **When cleaning the seats, do not use an organic solvent such as paint thinner, benzene, alcohol and gasoline. Doing so may damage the surface of the heater or seats.**
- **To prevent overheating the seat warmer, do not place anything on the seats that insulates against heat, such as blankets, cushions or seat covers on the seats while the seat warmer is in operation.**
- **Do not place heavy or sharp objects on the seat. Those things may damage the seat warmer system.**

(Continued)

(Continued)

- **Be careful not to spill liquid such as water or beverages on the seat. If you spill some liquid, wipe the seat with a dry towel. Before using the seat warmer, dry the seat completely.**
- **Do not change the seat cover. It may damage the seat warmer or air ventilation system.**

⚠ WARNING

■ Seat warmer burns

Passengers should use extreme caution when using seat warmers due to the possibility of excess heating or burns. The occupants must be able to feel if the seat is becoming too warm and to turn the seat warmer off. The seat warmer may cause burns even at low temperatures, especially if used for long periods of time.
In particular, the driver must exercise extreme care for the following types of passengers:
(Continued)

(Continued)

1. **Infants, children, elderly or disabled persons, or hospital outpatients**
2. **Persons with sensitive skin or those that burn easily**
3. **Fatigued individuals**
4. **Intoxicated individuals**
5. **Individuals taking medication that can cause drowsiness or sleepiness (sleeping pills, cold tablets, etc.)**

Air ventilation seat (if equipped)

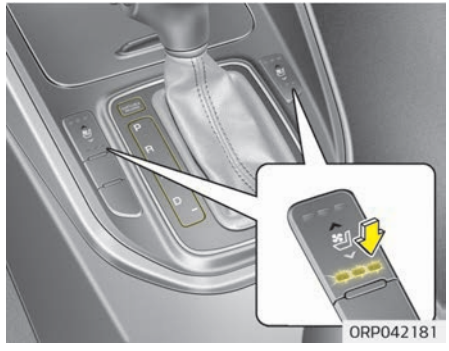

The air ventilation is provided to cool the driver's seat or front passenger's seat during hot weather by blowing air through small vent holes on the surface of the seat and seatback. While the engine is running, press the switch to cool the seat.
When the operation of the air ventilation is not needed, keep the switches in the OFF position.

- Each time you press the switch, the airflow will change as follows:

OFF→HIGH( )→MIDDLE( )→LOW( )

- When pressing the switch for more than 1.5 seconds with the seat cooler operating, the seat cooler will turn OFF.
- When the air ventilation seat is turned on, the seat may get cooler after about 5 minutes.
- Because the air ventilation uses the air in the vehicle, cooling efficiency depends on the temperature of the air. In order to improve cooling efficiency, use the air conditioning system together.
- The air ventilation seat defaults to the OFF position whenever the ignition switch is turned to the ON position.

⚠ CAUTION

■ Seat damage

- **When cleaning the seats, do not use an organic solvent such as paint thinner, benzene, alcohol and gasoline. Doing so may damage the air ventilation seat.**

(Continued)

(Continued)

- **Do not place heavy or sharp objects on the seat. Those things may damage the air ventilation seat.**
- **Be careful not to spill liquid such as water or beverages on the seat. If you spill some liquid, wipe the seat with a dry towel. Before using the air ventilation seat, dry the seat completely.**
- **Do not change the seat cover. It may damage the seat warmer or air ventilation system.**

Sunvisor

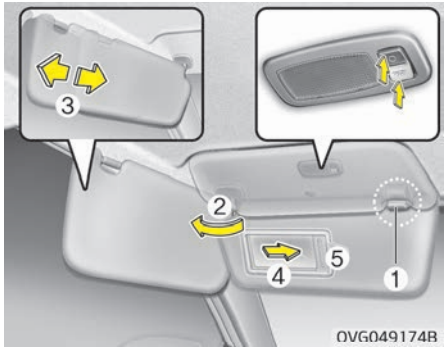

Use the sunvisor to shield direct light through the front or side windows.
To use a sunvisor, pull it downward.
To use a sunvisor for a side window, pull it downward, unsnap it from the bracket (1) and swing it to the side. (2)
Adjust the sunvisor extension forward or backward (3). (if equipped)
To use the vanity mirror, pull down the visor and open the mirror cover (4).
To use the vanity mirror lamp, switch it on. (if equipped)
The ticket holder (5) is provided for holding a tollgate ticket.

✻ NOTICE

Close the vanity mirror cover securely and return the sunvisor to its original position after use.

⚠ CAUTION

■ Vanity mirror lamp (if equipped)

Always have the switch in the off position when the vanity mirror lamp is not in use. If the sunvisor is closed without the lamp off, it may discharge the battery or damage the sunvisor.

⚠ WARNING

For your safety, do not obstruct your vision when using the sunvisor.

✻ To learn how to use the vanity mirror lamp, refer to "Vanity mirror lamp" on page 4-115.

Seatback table (if equipped)

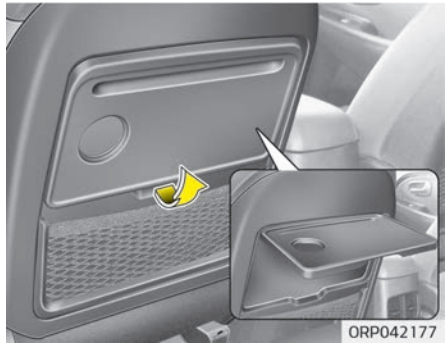

The tables are located on the back of the front seats. The passenger on the second row seat can use the table swing it up to a horizontal position.

⚠ WARNING

While the vehicle is in motion, the tables must not be used. The tables have to be used while the vehicle is parked.

⚠ CAUTION

- **Be sure to fold down the table prior to folding the 2nd row seat forward.**
- **Do not put heavy stuff on the table (Max load weight 3.5 kgf), since it may cause damage to the table.**

Power outlet

■ Front

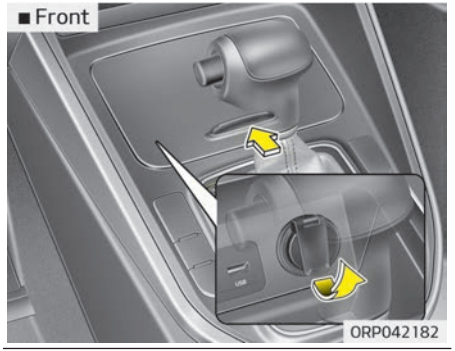

■ Rear



■ Cargo

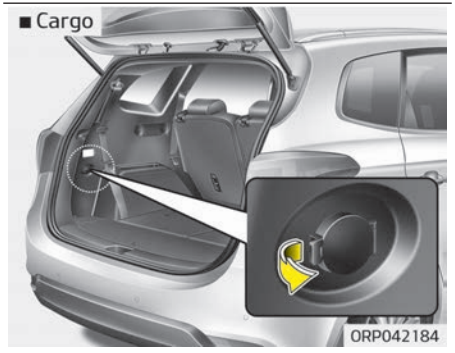

The power outlet is designed to provide power for mobile telephones or other devices designed to operate with vehicle electrical systems. The devices should draw less than 10 amps with the engine running.

⚠ CAUTION

- **Use power outlet only when the engine is running and remove the accessory plug after use. Using the accessory plug for prolonged periods of time with the engine off could cause the battery to discharge.**

(Continued)

(Continued)

- **Only use 12V electric accessories which are less than 10A in electric capacity.**
- **Adjust the air-conditioner or heater to the lowest operating level when using the power outlet.**
- **Close the cover when not in use.**
- **Some electronic devices can cause electronic interference when plugged into a vehicle's power outlet. These devices may cause excessive audio static and malfunctions in other electronic systems or devices used in your vehicle.**

⚠ WARNING

Do not put a finger or a foreign element (pin, etc.) into a power outlet and do not touch with a wet hand. You may get electrocuted or fire may occur.

AUX, USB and iPod®

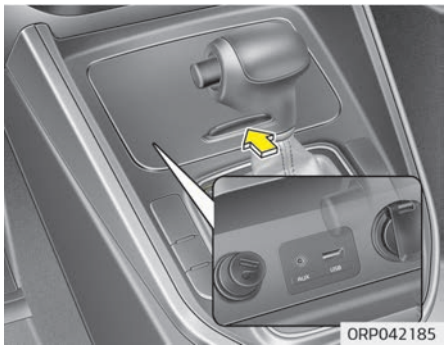

You can use an AUX port to connect audio devices and an USB port to plug in an USB and also an iPod®.

✻ NOTICE

When using a portable audio device connected to the power outlet, noise may occur during playback. If this happens, use the power source of the portable audio device.

✻ iPod® is a trademark of Apple Inc.

Coat hook

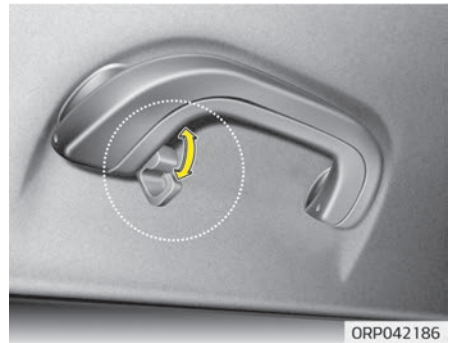

⚠ CAUTION

- **Do not hang heavy clothes, since those may damage the hook.**
- **Be careful when opening and closing the doors. Clothes, etc. may get caught between the door gap.**

⚠ WARNING



Do not hang other objects such as hangers or hard objects except clothes. Also, do not put heavy, sharp or breakable objects in the clothe pockets. In an accident or when the curtain air bag is inflated, it may cause vehicle damage or personal injury.

Floor mat anchor(s) (if equipped)

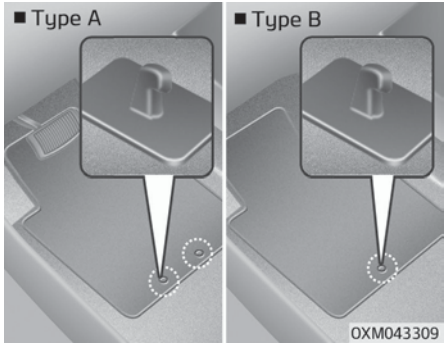

When using a floor mat on the front floor carpet, make sure it attaches to the floor mat anchor(s) in your vehicle. This keeps the floor mat from sliding forward.

⚠ WARNING

The following must be observed when installing ANY floor mat to the vehicle.

(Continued)

(Continued)

- **Ensure that the floor mats are securely attached to the vehicle's floor mat anchor(s) before driving the vehicle.**
- **Do not use ANY floor mat that cannot be firmly attached to the vehicle's floor mat anchors.**
- **Do not stack floor mats on top of one another (e.g. all-weather rubber mat on top of a carpeted floor mat). Only a single floor mat should be installed in each position.**

IMPORTANT – Your vehicle was manufactured with driver's side floor mat anchors that are designed to securely hold the floor mat in place. To avoid any interference with pedal operation, Kia recommends that the Kia floor mat designed for use in your vehicle be installed.

Luggage net (holder) (if equipped)

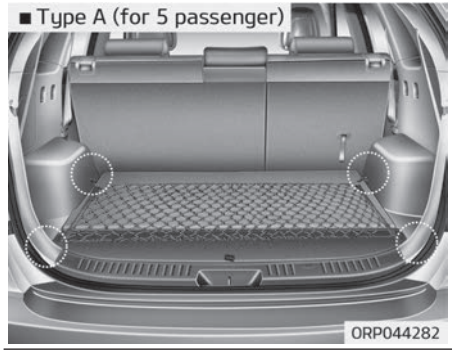

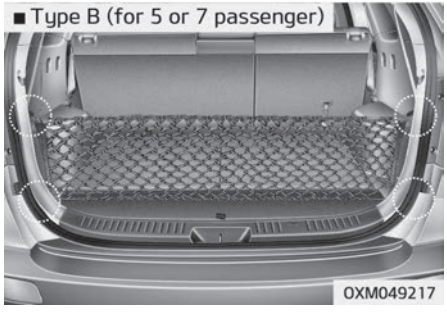

To keep items from shifting in the cargo area, you can use the four holders located in the cargo area to attach the luggage net. If necessary, Kia recommends to contact an authorized Kia dealer/service partner to obtain a luggage net.

⚠ CAUTION

To prevent damage to the goods or the vehicle, care should be taken when carrying fragile or bulky objects in the luggage compartment.

⚠ WARNING

To avoid eye injury, DO NOT overstretch the luggage net. ALWAYS keep your face and body out of the luggage net's recoil path. DO NOT use the luggage net when the strap has visible signs of wear or damage.

Cargo security screen (if equipped)



Use the cargo security screen to hide items stored in the cargo area.

To use the cargo security screen

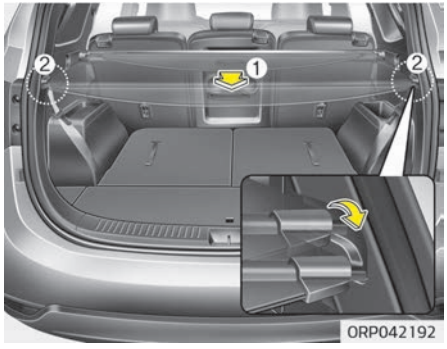

1. Pull the cargo security screen towards the rear of the vehicle by the handle (1).
2. Insert the guide pin into the guide (2).

✻ NOTICE

Pull out the cargo security screen with the handle in the center to prevent the guide pin from falling out of the guide.

When the cargo security screen is not in use:

1. Pull the cargo security screen rear and down to release it from the guides.
2. The cargo security screen will automatically slide back in.

✻ NOTICE

The cargo security screen may not automatically slide back in if the cargo security screen is not fully pulled out. Fully pull it out and then let go.

To remove the cargo security screen

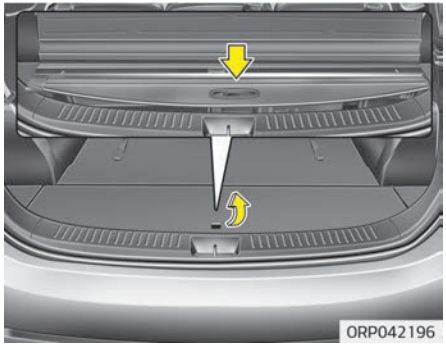

1. Push the guide pin inward.
2. While pushing the guide pin, pull out the cargo security screen.
3. Open the luggage tray and keep the cargo security screen in the tray.

To remove the cargo security screen from the luggage tray

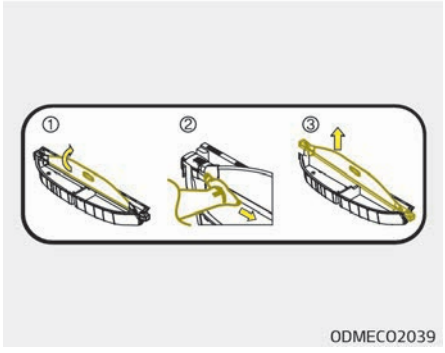

1. Pull up the screen board.
2. Push in the guide pin.
3. While pushing the guide pin, pull out the cargo security screen.

⚠ WARNING

- **Do not place objects on the cargo security screen. Such objects may be thrown about inside the vehicle and possibly injure vehicle occupants during an accident or when braking.**
- **Never allow anyone to ride in the luggage compartment. It is designed for luggage only.**
- **Maintain the balance of the vehicle and locate the weight as forward as possible.**

⚠ CAUTION

Since the cargo security screen may be damaged or malformed, do not put luggage on it when it is used.

Portable lamp usage (if equipped)



1. In-vehicle lamp, if necessary, after separation can be used as a portable.
2. Press the button (1).
3. Pull out the lamp holder.
4. Press the power switch (2).

❊ If the portable lamp does not turn on, it means the portable lamp needs to be charged. Insert the lamp holder and then charge it again. The charge mode will be activated if the ignition switch (or engine start/stop button) is on position or engine is running.

⚠ CAUTION

1. **Remove the batteries when not in use for a long time.**
2. **Use the specified battery.**
3. **You can use the regular batteries (Disposable batteries) but do not use the Non-rechargeable battery in charge mode. It may damage the vehicle.**
4. **Do not place the lamp with water or moist places and liquid compounds. These can cause internal leakage of a battery.**
5. **When replacing the batteries, check the direction and insert. It will not be charged if installed reversely.**
6. **Do not mix the rechargeable batteries. It may not be charged normally.**
7. **Do not place the lamp or batteries near fire or heat. It can cause internal leakage of a battery.**

(Continued)

(Continued)

8. **Do not apply electrical shock with portable charging terminals of the lamp.**
   It can cause internal leakage of a battery or damage the portable lamp.
9. **If the portable lamp does not turn on anymore after charged, replace the rechargeable batteries.**

Battery replacement

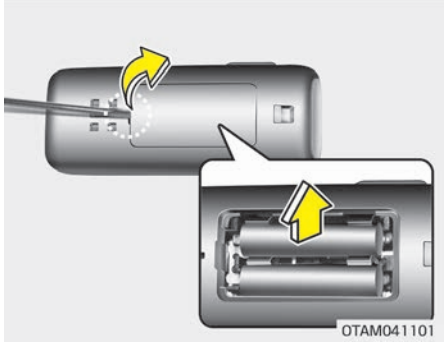

When replacement is necessary, use the following procedure.

1. Insert a slim tool into the slot and gently try open the battery cover.
2. Replace the batteries with new rechargeable batteries (AAA size). When replacing the batteries, make sure the position of batteries.
3. Close the cover carefully.

Side curtain (if equipped)

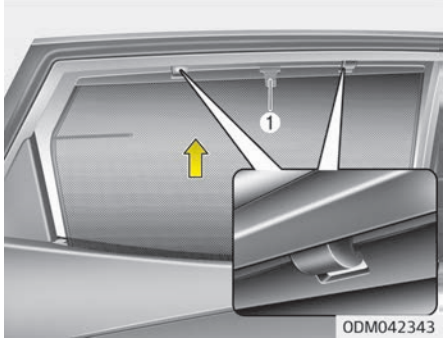

To use the side curtain:

1. Lift the curtain by the hook (1).
2. Hang the curtain on both sides of the hook.

✻ NOTICE

Be careful when operating curtain. If you miss the knob while operating, curtain shadebar may hit the door trim by return spring force.

Roof rack (if equipped)

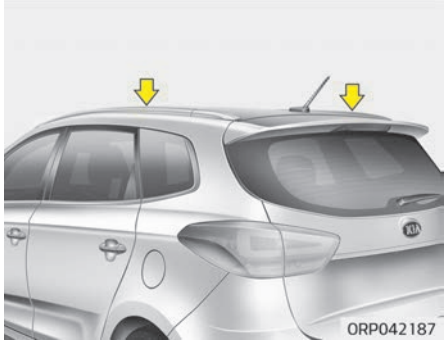

If the vehicle has a roof rack, you can load cargo on top of your vehicle.
Crossbars and fixing components needed to install the roof rack on your vehicle may be obtained from an authorized Kia dealer/service partner or other qualified shop.

✻ NOTICE

- The crossbars (if equipped) should be placed in the proper load carrying positions prior to placing items onto the roof rack.
- If the vehicle is equipped with a sunroof, be sure not to position cargo onto the roof rack in such a way that it could interfere with sunroof operation.
- When the roof rack is not being used to carry cargo, the crossbars may need to be repositioned if wind noise is detected.

⚠ CAUTION

- **When carrying cargo on the roof rack, take the necessary precautions to make sure the cargo does not damage the roof of the vehicle.**

(Continued)

(Continued)

- **When carrying large objects on the roof rack, make sure they do not exceed the overall roof length or width.**
- **When you are carrying cargo on the roof rack, do not operate the sunroof (if equipped).**

⚠ WARNING

- **The following specification is the maximum weight that can be loaded onto the roof rack. Distribute the load as evenly as possible across the crossbars (if equipped) and roof rack and secure the load firmly.**

ROOF RACK	100 kg (220 lbs.) EVENLY DISTRIBUTED

Loading cargo or luggage in excess of the specified weight limit on the roof rack may damage your vehicle.

(Continued)

(Continued)

- **The vehicle center of gravity will be higher when items are loaded onto the roof rack. Avoid sudden starts, braking, sharp turns, abrupt maneuvers or high speeds that may result in loss of vehicle control or rollover resulting in an accident.**
- **Always drive slowly and turn corners carefully when carrying items on the roof rack. Severe wind updrafts, caused by passing vehicles or natural causes, can cause sudden upward pressure on items loaded on the roof rack. This is especially true when carrying large, flat items such as wood panels or mattresses. This could cause the items to fall off the roof rack and cause damage to your vehicle or others around you.**
- **To prevent damage or loss of cargo while driving, check frequently before or while driving to make sure the items on the roof rack are securely fastened.**

Audio system

Audio system 5-02
Antenna 5-02
Audio remote control 5-02
How vehicle audio works 5-03
Caring for disc 5-06
Audio (Without touch screen) 5-12
Feature of your audio 5-13
Audio head unit (for RDS model) 5-13
CD Player: AM100A4GG, AM110A4GG, AM100A4GN, AM110A4GN, AM100A4GE, AM110A4GE, AM100A4GL, AM110A4GL 5-15
Audio head unit 5-16
Setup mode (for RDS model) 5-17
Setup mode 5-24
Radio (for RDS model) 5-29
Radio 5-30
Media mode 5-31
Bluetooth® Wireless Technology audio 5-36
Phone 5-36
Voice command 5-40
Audio (With touch screen) 5-48
Feature of your audio 5-49
Audio head unit (for RDS model) 5-49
CD Player: AM111A4GG, AM111A4GN, AM111A4GE, AM111A4GL 5-51
Feature of your audio 5-52
Audio head unit 5-52
Steering remote controller 5-53
Radio mode (for RDS model) 5-54
Radio mode 5-56
Media mode 5-58
Bluetooth® Wireless Technology audio mode (for Bluetooth® Wireless Technology equipped model) 5-77
Bluetooth® Wireless Technology (for RDS, Bluetooth® Wireless Technology equipped model) 5-79
Bluetooth® Wireless Technology (for Bluetooth® Wireless Technology equipped model) 5-88
Voice recognition 5-94
Setup mode (for RDS model) 5-101
Setup mode 5-108
Rear view camera 5-114
Appendix 5-115

AUDIO SYSTEM

✻ NOTICE

If you install an aftermarket HID head lamp, your vehicle's audio and electronic device may malfunction.

Antenna

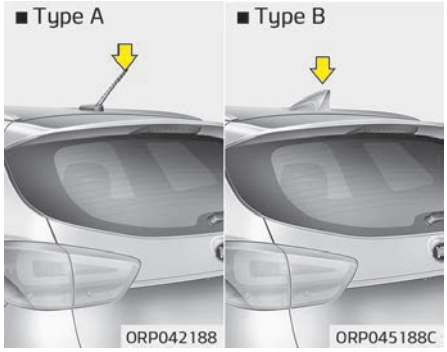

Pole type antenna (if equipped)

Your car uses a roof antenna to receive both AM and FM broadcast signals. This antenna is a removable type. To remove the antenna, turn it counterclockwise. To install the antenna, turn it clockwise.

Shark fin antenna (if equipped)

The shark fin antenna will receive the transmit data.

⚠ CAUTION

■ Pole type antenna

- **Before entering a place with a low height clearance or a car wash, remove the antenna by rotating it counterclockwise. If not, the antenna may be damaged.**
- **When reinstalling your antenna, it is important that it is fully tightened and adjusted to the upright position to ensure proper reception. But it could be removed when parking the vehicle or when loading cargo on the roof rack.**
- **When cargo is loaded on the roof rack, do not place the cargo near the antenna pole to ensure proper reception.**

Audio remote control (if equipped)

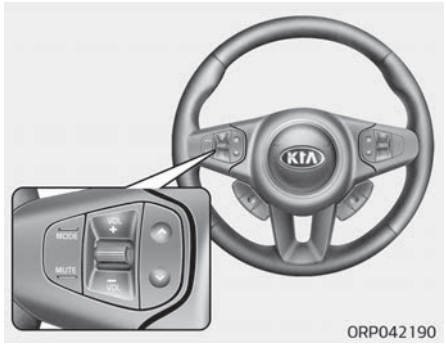

The steering wheel audio remote control button is installed to promote safe driving.

⚠ CAUTION

Do not operate the audio remote control buttons simultaneously.

VOL (+/-) (1)

• Push up the lever to increase volume.

- Push down the lever to decrease volume.

SEEK (∧,∨) (2)

The SEEK/PRESET button has different functions base on the system mode. For the following functions the button should be pressed for 0.8 seconds or more.

RADIO mode
It will function as the AUTO SEEK select button.

CDP mode
It will function as the FF/REW button.
If the SEEK button is pressed for less than 0.8 second, it will work as follows in each mode.

RADIO mode
It will function as the PRESET STATION select buttons.

CDP mode
It will function as the TRACK UP/DOWN button.
Detailed information for audio control buttons are described in "Audio head unit (without touch screen)" on page 5-13 and "Audio head unit (with touch screen)" on page 5-49.

MODE (3)

Press the button to select Radio, CD (compact disc), AUX or USB.

MUTE (4)

- Press the MUTE button to cancel the sound.
- Press the MUTE button again to activate the sound.

How vehicle audio works

FM reception

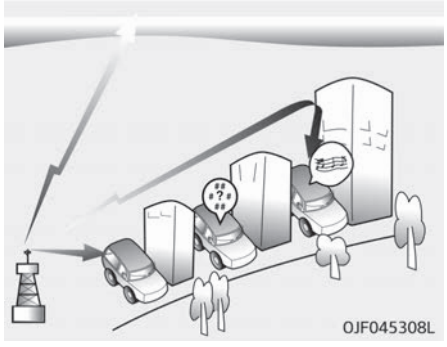

AM and FM radio signals are broadcast from transmitter towers located around your city. They are intercepted by the radio antenna on your vehicle. This signal is then received by the radio and sent to your vehicle speakers.

When a strong radio signal has reached your vehicle, the precise engineering of your audio system ensures the best possible quality reproduction. However, in some cases the signal coming to your vehicle may not be strong and clear. This can be due to factors such as the distance from the radio station, closeness of other strong radio stations or the presence of buildings, bridges or other large obstructions in the area.

AM (MW, LW) reception

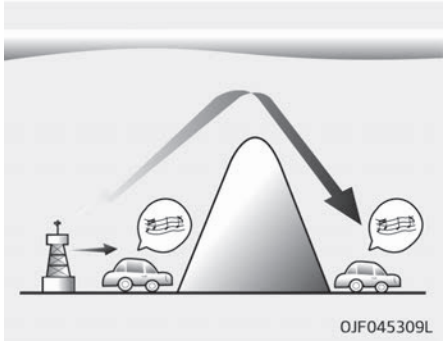

AM broadcasts can be received at greater distances than FM broadcasts. This is because AM radio waves are transmitted at low frequencies. These long, low frequency radio waves can follow the curvature of the earth rather than travelling straight out into the atmosphere. In addition, they curve around obstructions so that they can provide better signal coverage.

FM radio station

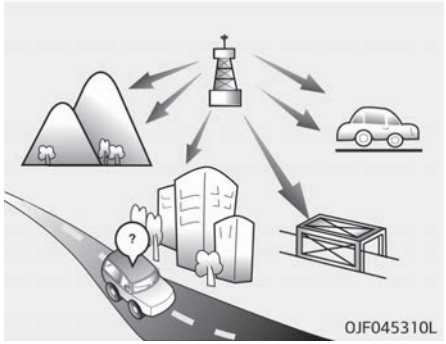

FM broadcasts are transmitted at high frequencies and do not bend to follow the earth's surface. Because of this, FM broadcasts generally begin to fade at short distances from the station. Also, FM signals are easily affected by buildings, mountains, or other obstructions. These can result in certain listening conditions which might lead you to believe a problem exists with your radio. The following conditions are normal and do not indicate radio trouble:

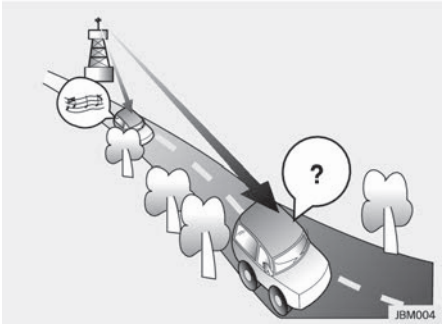

- Fading - As your vehicle moves away from the radio station, the signal will weaken and sound will begin to fade. When this occurs, we suggest that you select another stronger station.

- Flutter/Static - Weak FM signals or large obstructions between the transmitter and your radio can disturb the signal causing static or fluttering noises to occur. Reducing the treble level may lessen this effect until the disturbance clears.

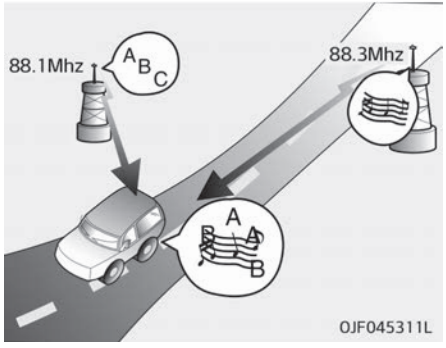

- Station Swapping - As a FM signal weakens, another more powerful signal near the same frequency may begin to play. This is because your radio is designed to lock onto the clearest signal. If this occurs, select another station with a stronger signal.

- Multi-Path Cancellation - Radio signals being received from several directions can cause distortion or fluttering. This can be caused by a direct and reflected signal from the same station, or by signals from two stations with close frequencies. If this occurs, select another station until the condition has passed.

Using a cellular phone or a two-way radio

When a cellular phone is used inside the vehicle, noise may be produced from the audio system. This does not mean that something is wrong with the audio equipment. In such a case, use the cellular phone at a place as far as possible from the audio equipment.

⚠ CAUTION

When using a communication system such as a cellular phone or a radio set inside the vehicle, a separate external antenna must be fitted. When a cellular phone or a radio set is used with an internal antenna alone, it may interfere with the vehicle's electrical system and adversely affect safe operation of the vehicle.

⚠ WARNING

Do not use a cellular phone while driving. Stop at a safe location to use a cellular phone.

Caring for disc

- If the temperature inside the car is too high, open the car windows to ventilate before using the system.
- It is illegal to copy and use MP3/WMA files without permission. Use CDs that are created only by lawful means.
- Do not apply volatile agents, such as benzene and thinner, normal cleaners and magnetic sprays made for analogue disc onto CDs.
- To prevent the disc surface from getting damaged, hold CDs by the edges or the center hole only.
- Clean the disc surface with a piece of soft cloth before playback (wipe it from the center to the outside edge).
- Do not damage the disc surface or attach pieces of sticky tape or paper.
- Make certain only CDs are inserted into the CD player (Do not insert more than one CD at a time).
- Keep CDs in their cases after use to protect them from scratches or dirt.
- Depending on the type of CD-R/CD-RW CDs, certain CDs may not operate normally according to manufacturing companies or making and recording methods. In such circumstances, continued use may cause malfunctions to your audio system.

✻ NOTICE

■ Playing an Incompatible Copy Protected Audio CD

Some copy protected CDs, which do not comply with international audio CD standards (Red Book), may not play on your car audio. Please note that inabilities to properly play a copy protected CD may indicate that the CD is defective, not the CD player.

✻ NOTE:
Order of playing files (folders):

1. Song playing order: 1 to 14 sequentially.
2. Folder playing order:

✻ If no song file is contained in the folder, that folder is not displayed.

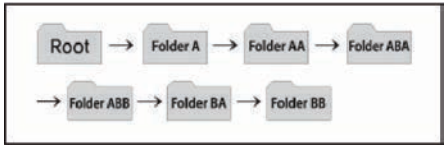

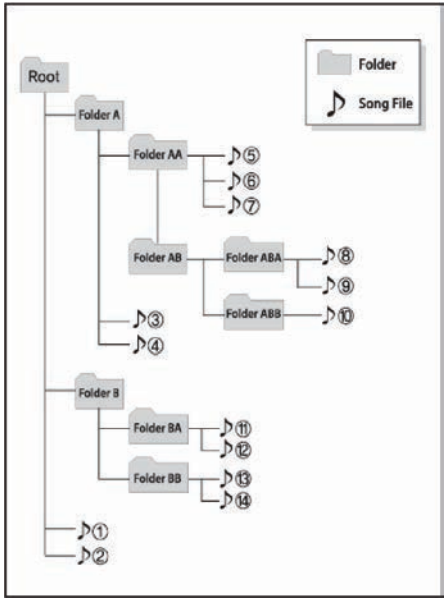

⚠ WARNING

- Do not stare at the screen while driving. Staring at the screen for prolonged periods of time could lead to traffic accidents.
- Do not disassemble, assemble, or modify the audio system. Such acts could result in accidents, fire, or electric shock.
- Using the phone while driving may lead to a lack of attention of traffic conditions and increase the likelihood of accidents. Use the phone feature after parking the vehicle.
- Heed caution not to spill water or introduce foreign objects into the device. Such acts could lead to smoke, fire, or product malfunction.
- Please refrain from use if the screen is blank or no sound can be heard as these signs may indicate product malfunction. Continued use in such conditions could lead to accidents (fires, electric shock) or product malfunctions.

(Continued)

(Continued)

- Do not touch the antenna during thunder or lightening as such acts may lead to lightning induced electric shock.
- Do not stop or park in parking-restricted areas to operate the product. Such acts could lead to traffic accidents.
- Use the system with the vehicle ignition turned on. Prolonged use with the ignition turned off could result in battery discharge.

⚠ CAUTION

- Operating the device while driving could lead to accidents due to a lack of attention to external surroundings. First park the vehicle before operating the device.
- Adjust the volume to levels that allow the driver to hear sounds from outside of the vehicle. Driving in a state where external sounds cannot be heard may lead to accidents.

(Continued)

(Continued)

- Pay attention to the volume setting when turning the device on. A sudden output of extreme volume upon turning the device on could lead to hearing impairment. (Adjust the volume to a suitable levels before turning off the device.)
- If you want to change the position of device installation, please inquire with your place of purchase or service maintenance center. Technical expertise is required to install or disassemble the device.
- Turn on the car ignition before using this device. Do not operate the audio system for long periods of time with the ignition turned off as such operations may lead to battery discharge.
- Do not subject the device to severe shock or impact. Direct pressure onto the front side of the monitor may cause damage to the LCD or touch screen.

(Continued)

(Continued)

- **When cleaning the device, make sure to turn off the device and use a dry and smooth cloth. Never use tough materials, chemical cloths, or solvents (alcohol, benzene, thinners, etc.) as such materials may damage the device panel or cause color/quality deterioration.**
- **Do not place beverages close to the audio system. Spilling beverages may lead to system malfunction.**
- **In case of product malfunction, please contact your place of purchase or After Service center.**
- **Placing the audio system within an electromagnetic environment may result in noise interference.**

✻ NOTICE

■ Using the USB device

(Continued)

(Continued)

- To use an external USB device, make sure the device is not connected when starting up the vehicle. Connect the device after starting up.
- If you start the engine when the USB device is connected, it may damage the USB device. (USB flashdrives are very sensitive to electric shock.)
- If the engine is started up or turned off while the external USB device is connected, the external USB device may not work.
- The System may not play inauthentic MP3 or WMA files.
  1. It can only play MP3 files with the compression rate between 8Kbps ~ 320Kbps.
  2. It can only play WMA music files with the compression rate between 8Kbps ~ 320Kbps.

(Continued)

(Continued)

- Take precautions for static electricity when connecting or disconnecting the external USB device.
- An encrypted MP3 PLAYER is not recognizable.
- Depending on the condition of the external USB device, the connected external USB device can be unrecognizable.
- When the formatted byte/sector setting of External USB device is not either 512BYTE or 2048BYTE, then the device will not be recognized.
- Use only a USB device formatted to FAT 12/16/32.
- USB devices without USB I/F authentication may not be recognizable.
- Make sure the USB connection terminal does not come in contact with the human body or other objects.

(Continued)

(Continued)

- If you repeatedly connect or disconnect the USB device in a short period of time, it may break the device.
- You may hear a strange noise when connecting or disconnecting a USB device.
- If you disconnect the external USB device during playback in USB mode, the external USB device can be damaged or may malfunction. Therefore, disconnect the external USB device when the audio is turned off or in another mode. (e.g, Radio, CD)
- Depending on the type and capacity of the external USB device or the type of the files stored in the device, there is a difference in the time taken for recognition of the device.
- Do not use the USB device for purposes other than playing music files.

(Continued)

(Continued)

- Playing videos through the USB is not supported.
- Use of USB accessories such as rechargers or heaters using USB I/F may lower performance or cause trouble.
- If you use devices such as a USB hub purchased separately, the vehicle's audio system may not recognize the USB device. In that case, connect the USB device directly to the multimedia terminal of the vehicle.
- If the USB device is divided by logical drives, only the music files on the highest-priority drive are recognized by car audio.
- Devices such as MP3 Player/Cellular phone/Digital camera can be unrecognizable by standard USB I/F can be unrecognizable.
- Charging through the USB may not be supported in some mobile devices.

(Continued)

(Continued)

- USB HDD or USB types liable to connection failures due to vehicle vibrations are not supported. (i-stick type)
- Some non-standard USB devices (METAL COVER TYPE USB) can be unrecognizable.
- Some USB flash memory readers (such as CF, SD, micro SD, etc.) or external-HDD type devices can be unrecognizable.
- Music files protected by DRM (DIGITAL RIGHTS MANAGEMENT) are not recognizable.
- The data in the USB memory may be lost while using this audio. Always back up important data on a personal storage device.

(Continued)

(Continued)

- 
  Please avoid using USB memory products which can be used as key chains or cellular phone accessories as they could cause damage to the USB jack.

  Please make certain only to use plug type connector products.

✻ NOTICE

■ Using the iPod® device

- Some iPod® models may not support communication protocol and files may not properly play.
  Supported iPod® models:
  - iPhone® 3GS/4
  - iPod touch® 1st~4th generation
  - iPod nano® 1st~6th generation
  - iPod classic®

(Continued)

(Continued)

- The order of search or playback of songs in the iPod® can be different from the order searched in the audio system.
- If the iPod® disabled due to its own malfunction, reset the iPod®. (Reset: Refer to iPod® manual)
- An iPod® may not operate normally on low battery.
- Some iPod® devices, such as the iPhone®, can be connected through the Bluetooth® Wireless Technology interface. The device must have audio Bluetooth® Wireless Technology capability (such as for stereo headphone Bluetooth® Wireless Technology). The device can play, but it will not be controlled by the audio system.
- To use iPod® features within the audio, use the cable provided upon purchasing an iPod® device.

(Continued)

(Continued)

- Skipping or improper operation may occur depending on the characteristics of your iPod®/iPhone® device.
- If your iPhone® is connected to both the Bluetooth® Wireless Technology and USB, the sound may not be properly played. In your iPhone®, select the Dock connector or Bluetooth® Wireless Technology to change the sound output (source).
- When connecting iPod® with the iPod® Power Cable, insert the connector to the multimedia socket completely. If not inserted completely, communications between iPod® and audio may be interrupted.
- When adjusting the sound effects of the iPod® and the audio system, the sound effects of both devices will overlap and might reduce or distort the quality of the sound.

(Continued)

(Continued)

- Deactivate (turn off) the equalizer function of an iPod® when adjusting the audio system's volume, and turn off the equalizer of the audio system when using the equalizer of an iPod®.
- When not using iPod® with car audio, detach the iPod® cable from iPod®. Otherwise, iPod® may remain in accessory mode, and may not work properly.

AUDIO (WITHOUT TOUCH SCREEN)

CD Player (for RDS model): AM100A4EE, AM110A4EE





✳ No Bluetooth logo will be shown if the Bluetooth® Wireless Technology feature is not supported.

RP050039/RP050040

Feature of your audio

❊ Display and settings may differ depending on the selected audio.

Audio head unit (for RDS model)



1. ⏏ (EJECT)
   - Ejects the disc.
2. RADIO
   - Changes to FM/AM mode.
   - Each time the button is pressed, the mode is changed in order of FM1 ➡ FM2 ➡ FMA ➡ AM ➡ AMA.
3. MEDIA
   - Changes to CD, USB (iPod), AUX, My Music, BT Audio mode.
   - Each time the button is pressed, the mode is changed in order of CD, USB (iPod), AUX, My Music, BT Audio.
4. PHONE (for Bluetooth® Wireless Technology equipped model)
   - Operates Phone Screen.
   - When a phone is not connected, the connection screen is displayed.
5. POWER/VOL knob
   - Power knob: Turns power On/Off by pressing the knob.
   - Volume knob: Sets volume by turning the knob left/right.
6. SEEK TRACK
   - Radio mode: Automatically searches for broadcast frequencies.
   - CD, USB, iPod, My Music mode
     - Shortly press the key (under 0.8 seconds): Moves to next or previous song (file).
     - Press and hold the key (over 0.8 seconds): Rewinds or fast-forwards the current song.
7. 1 ~ 6 (Preset)
   - Radio mode: Saves frequencies (channels) or receives saved frequencies (channels).
   - CD, USB, iPod, My Music mode
     - 1 RPT: Repeat
     - 2 RDM: Random

In the Radio, Media, Setup, and Menu pop up screen, the number menu is selected.



8. ☾
   - Each time the button is shortly pressed (under 0.8 seconds), sets Screen Off ➡ Screen On ➡ Screen Off.

- Audio operation is maintained and only the screen will be turned Off.
- In the Screen Off state, press any button to turn the Screen On again.

9. TA/SCAN
   - Radio mode
     - Shortly press the key (under 0.8 seconds): TA On/Off.
     - Press and hold the key (over 0.8 seconds): Previews each broadcast for 5 seconds each.
   - Media mode
     - Press and hold the key (under 0.8 seconds): Previews each song (file) for 10 seconds each.
     - Press and hold the button again to continue listening to the current song (file).
10. SETUP CLOCK
    - Shortly press the key (under 0.8 seconds): Moves to the Display, Sound, Clock, Phone, System setting modes.
    - Press and hold the key (over 0.8 seconds): Move to the Time setting screen.
11. MENU
    - Displays menus for the current mode.
    - iPod list: Move to parent category.
12. TUNE knob
    - Radio mode: Changes frequency by turning the knob left/right.
    - CD, USB, iPod, My Music mode: Searches .songs (files) by turning the knob left/right.
    - When the desired song is displayed, press the knob to play the song.
    - Moves focus in all selection menus and selects menus.
13. PTY FOLDER
    - FM: RDS Program Type Search.
    - CD MP3, USB mode: Folder Search



14. FM
    - Changes to FM mode.
    - Each time the button is pressed, the mode changed in order of FM1 ➡ FM2 ➡ FMA.
15. AM
    - Changes to AM mode.
    - Each time the key is pressed, the mode changed in order of AM ➡ AMA mode.

CD Player: AM100A4GG, AM110A4GG, AM100A4GN, AM110A4GN, AM100A4GE, AM110A4GE, AM100A4GL, AM110A4GL





✳ No Bluetooth logo will be shown if the Bluetooth® Wireless Technology feature is not supported.

RP050044/RP050045

Audio head unit



1. ⏏ (EJECT)
   - Ejects the disc.
2. RADIO
   - Changes to FM/AM mode.
   - Each time the button is pressed, the mode is changed in order of FM1 ➡ FM2 ➡ AM.
3. MEDIA
   - Changes to CD, USB (iPod), AUX, My Music, BT Audio mode.
   - Each time the button is pressed, the mode is changed in order of CD, USB (iPod), AUX, My Music, BT Audio.
4. PHONE (for Bluetooth® Wireless Technology equipped model)
   - Operates Phone Screen.
   - When a phone is not connected, the connection screen is displayed.
5. POWER/VOL knob
   - Power knob: Turns power On/Off by pressing the knob.
   - Volume knob: Sets volume by turning the knob left/right.
6. SEEK TRACK
   - Radio mode: Automatically searches for broadcast frequencies.
   - CD, USB, iPod, My Music mode
     - Shortly press the key (under 0.8 seconds): Moves to next or previous song (file).
     - Press and hold the key (over 0.8 seconds): Rewinds or fast-forwards the current song.
7. 1 ~ 6 (Preset)
   - Radio mode: Saves frequencies (channels) or receives saved frequencies (channels).
   - CD, USB, iPod, My Music mode
     - 1 RPT: Repeat
     - 2 RDM: Random

     In the Radio, Media, Setup, and Menu pop up screen, the number menu is selected.



8. DISP (☾)
   - Each time the button is shortly pressed (under 0.8 seconds), sets Screen Off ➡ Screen On ➡ Screen Off.
   - Audio operation is maintained and only the screen will be turned Off.
   - In the Screen Off state, press any button to turn the Screen On again.
9. SCAN
   - Radio mode

- Previews each broadcast for 5 seconds each

• Media mode
  - Previews each song (file) for 10 seconds each

10. SETUP CLOCK
   • Shortly press the key (under 0.8 seconds): Moves to the Display, Sound, Clock, Phone, System setting modes.
   • Press and hold the key (over 0.8 seconds): Move to the Time setting screen.
11. MENU
   • Displays menus for the current mode.
   • iPod list: Move to parent category.
12. TUNE knob
   • Radio mode: Changes frequency by turning the knob left/right.
   • CD, USB, iPod, My Music mode: Searches songs (files) by turning the knob left/right.
   When the desired song is displayed, press the knob to play the song.
   • Moves focus in all selection menus and selects menus.
13. FOLDER
   • CD MP3, USB mode: Folder Search



14. FM
   • Changes to FM mode.
   • Each time the button is pressed, the mode changed in order of FM1 ➡ FM2.
15. AM
   • Changes to AM mode.

Setup mode (for RDS model)

AM100A4EE, AM110A4EE

Display settings

Press the SETUP button ▶ Select [Display] through knob or 1 RPT key ▶ Select menu through knob

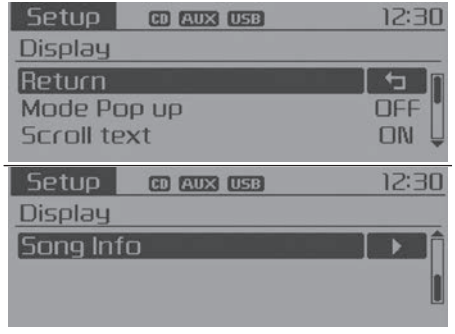

Mode Pop up

[Mode Pop up] ▶ Changes ON selection mode
• During On state, press the RADIO or MEDIA button to display the mode change pop up screen.

Scroll text

[Scroll text] ▶ Set ON/OFF
• ON: Maintains scroll
• OFF: Scrolls only one (1) time.

Song Info

When playing an MP3 file, select the desired display info from [Folder/File] or [Album/Artist/Song].



Sound settings

Press the SETUP key ▶ Select [Sound] through knob or 2 RDM key ▶ Select menu through knob





Audio Settings

This menu allows you to set the 'Bass, Middle, Treble' and the Sound Fader and Balance.
Select [Audio Settings] ▶ Select menu through knob ▶ Turn knob left/right to set

- Bass, Middle, Treble: Selects the sound tone.
- Fader, Balance: Moves the sound fader and balance.
- Default: Restores default settings.
- Return: While adjusting values, repressing the knob will restore the parent menu.

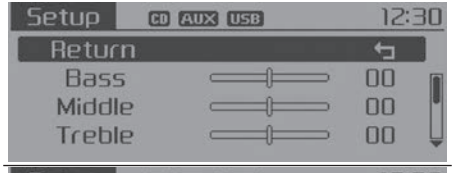



Speed Dependent Volume Control

This feature is used to automatically control the volume level according to the speed of the vehicle.
Select [Speed Dependent Vol.] ▶ Set in 4 levels [Off/Low/Mid/High] of knob

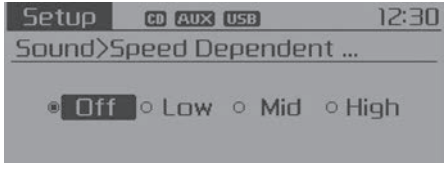

Volume Dialogue

Adjusts voice recognition volume.
Select [Volume Dialogue] ▶ Set volume of knob



Clock settings

Press the SETUP CLOCK button ▶ Select [Clock] through knob or 3 key ▶ Select menu through knob





Clock Settings

This menu is used to set the time. Select [Clock Settings] ▶ Set through knob ▶ Press knob



Adjust the number currently in focus to set the [hour] and press the knob to set the [minute].

Day Settings

This menu is used to set the date (DD/MM/YYYY).
Select [Day Settings] ▶ Set through knob ▶ Press knob

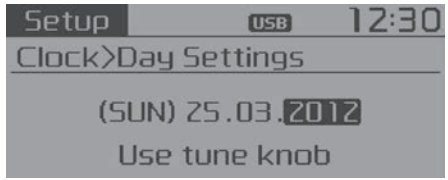

Adjust the number currently in focus to make the settings and press the knob to move to the next setting. (Set in order of Year/Month/Day)

Time Format

This function is used to set the 12/24 hour time format of the audio system.
Select [Time Format] ▶ Set 12hr/24hr through knob

Clock Display when Power is OFF

Select [Clock Disp.(Pwr Off)] ▶ Set On/Off through knob

- On: Displays time/date on screen
- Off: Turn off.

Automatic RDS Time (With RDS)

This option is used to automatically set the time by synchronizing with RDS.
Select [Automatic RDS Time] ▶ Set On/Off through knob

- On: Turn on Automatic Time
- Off: Turn off.

Phone Setup (Bluetooth® Wireless Technology equipped model)

Press the SETUP button ▶ Select [Phone]

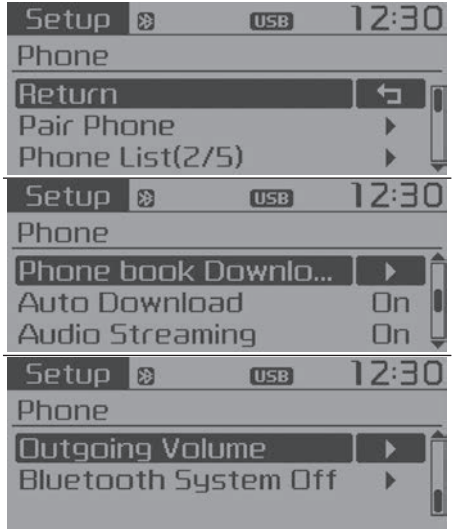

Pair Phone

⚠ CAUTION

To pair a Bluetooth® Wireless Technology enabled mobile phone, authentication and connection processes are first required. As a result, you
(Continued)

(Continued)

cannot pair your mobile phone while driving the vehicle. First park your vehicle before use.

Select [Pair Phone] ▶ Set through knob

1. Search for device names as displayed on your mobile phone and connect.
2. Input the passkey displayed on the screen. (Passkey : 0000)

❊ The device name and passkey will be displayed on the screen for up to 3 minutes. If pairing is not completed within the 3 minutes, the mobile phone pairing process will automatically be canceled.

3. Pairing completion is displayed.

❊ In some mobile phones, pairing will automatically be followed by connection.

❊ It is possible to pair up to five Bluetooth® Wireless Technology enabled mobile phones.

Phone List

The names of up to 5 paired phones will be displayed.



A [▶] is displayed in front of the currently connected phone.
Select the desired name to setup the selected phone.

- Connecting a phone
  Select [Phone List] ▶ Select mobile phone through knob ▶ Select [Connect Phone]



1. Select a mobile phone that is not currently connected.
2. Connect the selected mobile phone.
3. Connection completion is displayed.

❈ If a phone is already connected, disconnect the currently connected phone and select a new phone to connect.

• Disconnecting a connected phone
Select [Phone List] ▶ Select mobile phone through knob ▶ Select [Disconnect Phone]



1. Select the currently connected mobile phone.
2. Disconnect the selected mobile phone.
3. Disconnection completion is displayed.

• Changing connection sequence (Priority)
This is used to change the order (priority) of automatic connection for the paired mobile phones.
Select [Phone List] ▶ Select [Priority] through knob ▶ Select No. 1 Priority mobile phone

1. Select [Priority].
2. From the paired phones, select the phone desired for No.1 priority.
3. The changed priority sequence is displayed.

❈ Once the connection sequence (priority) is changed, the new no. 1 priority mobile phone will be connected.
- When the no. 1 priority cannot be connected: Automatically attempts to connect the most recently connected phone.
- Cases when the most recently connected phone cannot be connected: Attempts to connect in the order in which paired phones are listed.
- The connected phone will automatically be changed to No. 1 priority.

• Delete
Select [Phone List] ▶ Select mobile phone through knob ▶ Select [Delete]
1. Select the desired mobile phone.
2. Delete the selected mobile phone.
3. Deletion completion is displayed.

❈ When attempting to delete a currently connected phone, the phone is first disconnected.

⚠ CAUTION

- **When you delete a mobile phone, the mobile phone phone book will also be erased.**
- **For stable Bluetooth® Wireless Technology communication, delete the mobile phone from the audio and also delete the audio from your mobile phone.**

Phone book Download

This feature is used to download phone book and call histories into the audio system.
Select [Phone book Download] ▶ Select through knob

⚠ CAUTION

- **The download feature may not be supported in some mobile phones.**

(Continued)

(Continued)

- **If a different operation is performed while phone book is being downloaded, downloading will be discontinued. Phone books already downloaded will be saved.**
- **When downloading new phone book, delete all previously saved phone book before starting download.**

Auto Download

When connecting a mobile phone, it is possible to automatically download new phone book and Call Histories.
Select [Auto Download] ▶ Set ON/OFF through knob

Audio Streaming

Songs (files) saved in your Bluetooth® Wireless Technology enabled mobile phone can be played through the audio system.
Select [Audio Streaming] ▶ Set ON/OFF through knob

⚠ CAUTION

The Bluetooth® Wireless Technology audio streaming feature may not be supported in some mobile phones.

Outgoing Volume

This is used to set the volume of your voice as heard by the other party while on a Bluetooth® Wireless Technology enabled handsfree call.
Select [Outgoing Volume] ▶ Set volume through knob

❇ Even while on a call, the volume can be changed by using the SEEK TRACK key.

Bluetooth® Wireless Technology System Off

This feature is used when you do not wish to use the Bluetooth® Wireless Technology system.
Select [Bluetooth System Off] ▶ Set through knob

❇ If a phone is already connected, disconnect the currently connected phone and turn the Bluetooth® Wireless Technology system off.

Using the Bluetooth® Wireless Technology

To use Bluetooth® Wireless Technology when the system is currently off, follow these next steps.

- Turning On Bluetooth® Wireless Technology through the PHONE key.
  Press the PHONE button ▶ Screen Guidance

❇ Moves to the screen where Bluetooth® Wireless Technology functions can be used and displays guidance.

- Turning On Bluetooth® Wireless Technology through the SETUP button.
  Press the SETUP button ▶ Select [Phone]
  1. A screen asking whether to turn on Bluetooth® Wireless Technology will be displayed.
  2. On the screen, select YES to turn on Bluetooth® Wireless Technology and display guidance.

❇ If the Bluetooth® Wireless Technology system is turned on, the system will automatically try to connect the most recently connected Bluetooth® Wireless Technology mobile phone.

⚠ CAUTION

- **Bluetooth® Wireless Technology connection may become intermittently disconnected in some mobile phones. Follow these next steps to try again.**
  1. **Turn the Bluetooth® Wireless Technology function within the mobile phone ON/OFF and try to connect again.**
  2. **Turn the mobile phone power ON/OFF and try to connect again.**
  3. **Completely remove the mobile phone battery, reboot, and then try to connect again.**
  4. **Reboot the audio system and try to connect again.**
  5. **Delete all paired devices in your mobile phone and the audio system and pair again for use.**

System settings

Press the SETUP button ▶ Select [System]

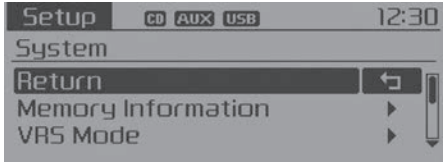



Memory Information (if equipped)

Displays currently used memory and total system memory.
Select [Memory Information] ▶ OK
The currently used memory is displayed on the left side while the total system memory is displayed on the right side.



VRS Mode

This feature is used to change voice command feedback between Normal and Expert modes.
Select [VRS Mode] ▶ Set through knob

- Normal: This mode is for beginner users and provides detailed instructions during voice command operation.
- Expert: This mode is for expert users and omits some information during voice command operation. (When using Expert mode, guidance instructions can be heard through the [Help] or [Menu] commands.)

✻ May differ depending on the selected audio.

Language

This menu is used to set the display and voice recognition language.
Select [Language] ▶ Set through knob



❉ The system will reboot after the language is changed.
❉ Language support by region.
Dansk, Deutsch, English(UK), Español, Français, Italiano, Nederlands, Русский, Polski, Svenska, Türkçe.

Setup mode

AM100A4GG, AM110A4GG
AM100A4GN, AM110A4GN
AM100A4GE, AM110A4GE
AM100A4GL, AM110A4GL

Display settings

Press the SETUP button ▶ Select [Display] through knob or 1 RPT key ▶ Select menu through knob





Mode Pop up

[Mode Pop up] ▶ Changes ON selection mode

- During On state, press the RADIO or MEDIA button to display the mode change pop up screen.

Text Scroll

[Text Scroll] ▶ Set ON/OFF

- ON: Maintains scroll
- OFF: Scrolls only one (1) time.

Media Display

When playing an MP3 file, select the desired display info from 'Folder/File' or 'Album/Artist/Song'.



Sound settings

Press the SETUP key ▶ Select [Sound] through knob or 2 RDM key ▶ Select menu through knob

Sound Settings

This menu allows you to set the 'Bass, Middle, Treble' and the Sound Fader and Balance.
Select [Audio Settings] ▶ Select menu through knob ▶ Turn knob left/right to set

- Bass, Middle, Treble: Selects the sound tone.
- Fader, Balance: Moves the sound fader and balance.
- Default: Restores default settings.
- Return: While adjusting values, repressing the TUNE knob will restore the parent menu.

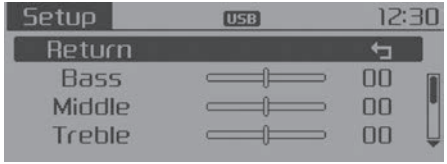

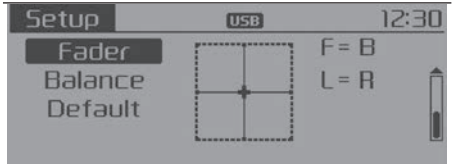

Speed Dependent Volume Control

This feature is used to automatically control the volume level according to the speed of the vehicle.
Select [Speed Dependent Vol.] ▶ Set in 4 levels [Off/Low/Mid/High] of knob



Clock settings

Press the SETUP CLOCK button ▶ Select [Clock] through knob or 3 key ▶ Select menu through knob

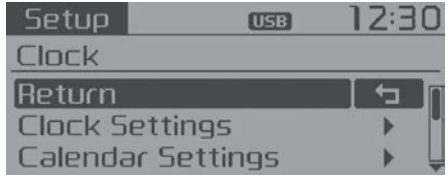

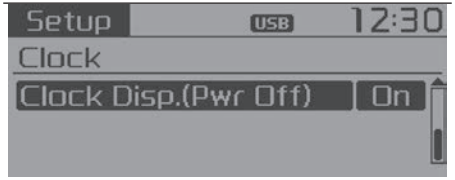

Clock Settings

This menu is used to set the time.
Select [Clock Settings] ▶ Set through knob ▶ Press knob



❊ Adjust the number currently in focus to set the [hour] and press the knob to set the [minute].

Calendar Settings

This menu is used to set the date (YYYY/MM/DD).
Select [Calendar Settings] ▶ Set through knob ▶ Press knob

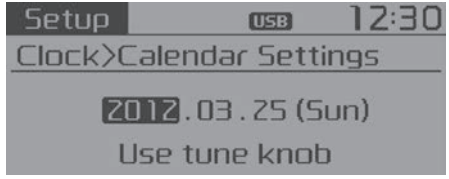

❊ Adjust the number currently in focus to make the settings and press the knob to move to the next setting. (Set in order of Year/Month/Day)

Clock Display when Power is OFF

Select [Clock Disp.(Pwr Off)] ▶ Set On/Off through knob

- On: Displays time/date on screen
- Off: Turn off.

Phone Setup (for Bluetooth® Wireless Technology equipped model)

Press the SETUP key ▶ Select [Phone]

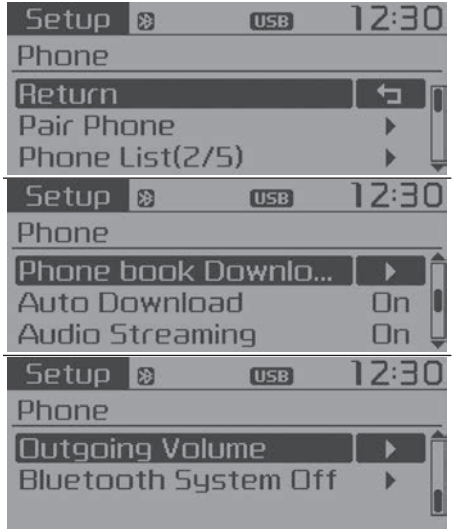

Pair Phone

⚠ CAUTION

To pair a Bluetooth® Wireless Technology enabled mobile phone, authentication and connection processes are first required. As a result, you
(Continued)

(Continued)

cannot pair your mobile phone while driving the vehicle. First park your vehicle before use.

Select [Pair Phone] ▶ Set through ◉ knob

1. Search for device names as displayed on your mobile phone and connect.
2. Input the passkey displayed on the screen. (Passkey : 0000)

❉ The device name and passkey will be displayed on the screen for up to 3 minutes. If pairing is not completed within the 3 minutes, the mobile phone pairing process will automatically be canceled.

3. Pairing completion is displayed.

❉ In some mobile phones, pairing will automatically be followed by connection.

❉ It is possible to pair up to five Bluetooth® Wireless Technology enabled mobile phones.

Phone List

The names of up to 5 paired phones will be displayed.



A [▶] is displayed in front of the currently connected phone.
Select the desired name to setup the selected phone.

- Connecting a phone
  Select [Phone List] ▶ Select mobile phone through ◉ knob ▶ Select [Connect Phone]



1. Select a mobile phone that is not currently connected.
2. Connect the selected mobile phone.
3. Connection completion is displayed.

❈ If a phone is already connected, disconnect the currently connected phone and select a new phone to connect.

• Disconnecting a connected phone
Select [Phone List] ▶ Select mobile phone through knob ▶ Select [Disconnect Phone]



1. Select the currently connected mobile phone.
2. Disconnect the selected mobile phone.
3. Disconnection completion is displayed.

• Changing connection sequence (Priority)
This is used to change the order (priority) of automatic connection for the paired mobile phones.
Select [Phone List] ▶ Select [Priority] through knob ▶ Select No. 1 Priority mobile phone

1. Select [Priority].
2. From the paired phones, select the phone desired for No.1 priority.
3. The changed priority sequence is displayed.

❈ Once the connection sequence (priority) is changed, the new no. 1 priority mobile phone will be connected.
- When the no. 1 priority cannot be connected: Automatically attempts to connect the most recently connected phone.
- Cases when the most recently connected phone cannot be connected: Attempts to connect in the order in which paired phones are listed.
- The connected phone will automatically be changed to No. 1 priority.

• Delete
Select [Phone List] ▶ Select mobile phone through knob ▶ Select [Delete]
1. Select the desired mobile phone.
2. Delete the selected mobile phone.
3. Deletion completion is displayed.

❈ When attempting to delete a currently connected phone, the phone is first disconnected.

⚠ CAUTION

- **When you delete a mobile phone, the mobile phone phone book will also be erased.**
- **For stable Bluetooth® Wireless Technology communication, delete the mobile phone from the audio and also delete the audio from your mobile phone.**

Contacts Download

This feature is used to download contacts and call histories into the audio system.
Select [Contacts Download] ▶ Select through knob

⚠ CAUTION

- **The download feature may not be supported in some mobile phones.**

(Continued)

(Continued)

- **If a different operation is performed while contacts are being downloaded, downloading will be discontinued. Contacts already downloaded will be saved.**
- **When downloading new contacts, delete all previously saved contacts before starting download.**

Auto Download

When connecting a mobile phone, it is possible to automatically download new phone book and Call Histories.
Select [Auto Download] ▶ Set ON/OFF through knob

Audio Streaming

Songs (files) saved in your Bluetooth® Wireless Technology enabled mobile phone can be played through the audio system.
Select [Audio Streaming] ▶ Set ON/OFF through knob

⚠ CAUTION

The Bluetooth® Wireless Technology audio streaming feature may not be supported in some mobile phones.

Outgoing Volume

This is used to set the volume of your voice as heard by the other party while on a Bluetooth® Wireless Technology enabled handsfree call.
Select [Outgoing Volume] ▶ Set volume through knob

❊ Even while on a call, the volume can be changed by using the SEEK TRACK key.

Bluetooth® Wireless Technology System Off

This feature is used when you do not wish to use the Bluetooth® Wireless Technology system.
Select [Bluetooth System Off] ▶ Set through knob

❊ If a phone is already connected, disconnect the currently connected phone and turn the Bluetooth® Wireless Technology system off.

Using the Bluetooth® Wireless Technology

To use Bluetooth® Wireless Technology when the system is currently off, follow these next steps.

- Turning On Bluetooth® Wireless Technology through the PHONE key.
  Press the PHONE button ▶ Screen Guidance

❊ Moves to the screen where Bluetooth® Wireless Technology functions can be used and displays guidance.

- Turning On Bluetooth® Wireless Technology through the SETUP button.
  Press the SETUP button ▶ Select [Phone]
  1. A screen asking whether to turn on Bluetooth® Wireless Technology will be displayed.
  2. On the screen, select YES to turn on Bluetooth® Wireless Technology and display guidance.

❊ If the Bluetooth® Wireless Technology system is turned on, the system will automatically try to connect the most recently connected Bluetooth® Wireless Technology mobile phone.

⚠ CAUTION

- **Bluetooth® Wireless Technology connection may become intermittently disconnected in some mobile phones. Follow these next steps to try again.**
  1. **Turn the Bluetooth® Wireless Technology function within the mobile phone ON/OFF and try to connect again.**
  2. **Turn the mobile phone power ON/OFF and try to connect again.**
  3. **Completely remove the mobile phone battery, reboot, and then try to connect again.**
  4. **Reboot the audio system and try to connect again.**
  5. **Delete all paired devices in your mobile phone and the audio system and pair again for use.**

System settings

Press the SETUP key ▶ Select [System]



Language

This menu is used to set the display and voice recognition language.
Select [Language] ▶ Set through knob



❊ The system will reboot after the language is changed.
❊ Language support by region.
한국어, English

Radio (for RDS model)

Changing RADIO mode



SEEK

Press the SEEK TRACK key
- Shortly pressing the key (under 0.8 seconds): Changes the frequency.
- Pressing and holding the key (over 0.8 seconds): Automatically searches for the next frequency.

Preset SEEK

Press the 1–6 key
- Shortly pressing the key (under 0.8 seconds): Plays the frequency saved in the corresponding key.
- Pressing and holding the key (over 0.8 seconds): Pressing and holding the desired key from 1–6 will save the currently playing broadcast to the selected key and sound a BEEP.

SCAN

Press the TA/SCAN key

- Shortly pressing the key (under 0.8 seconds): The broadcast frequency increases and previews each broadcast for 5 seconds each.
  After scanning all frequencies, returns and plays the current broadcast frequency.

Selecting through manual search

Turn the knob left/right to adjust the frequency.

- FM: Changes by 50KHz
- AM: Changes by 9khz

Traffic Announcement (TA)

Shortly pressing the TA/SCAN key (under 0.8 seconds): Set ON/OFF TA (Traffic Announcement) mode.

PTY Up/Down

Press the PTY FOLDER key when searching PTY in RDS Broadcasting Program Type selection.

MENU

Within the MENU key are the A.Store (Auto Store) and Info functions.

AST (Auto Store)

Press the MENU key ▶ Set [①AST] through knob or 1 RPT key.



Select AST (Auto Store) to save frequencies with superior reception to presets 1–6. If no frequencies are received, then the most recently received frequency will be broadcast.

❊ Saves only to the Preset memory 1–6 of FMA or AMA mode.

AF (Alternative Frequency)

Press the MENU key ▶ Set [②AF] through knob or 2 RDM key.
The Alternative Frequency option can be turned On/Off.

Region

Press the MENU key ▶ Set [③Region] through knob or 3 key.
The Region option can be turned On/Off.

News

Press the MENU key ▶ Set [④News] through knob or 4 key.
The News option can be turned On/Off.

Info Volume

Info Volume refers to the sound volume upon receiving News or Traffic information.
The info volume can be controlled by turning the knob left/right while a news or traffic broadcast is playing.

❊ AF, Region, and News are RDS Radio menus.

Radio

Changing RADIO mode



SEEK

Press the SEEK TRACK key

- Shortly pressing the key (under 0.8 seconds): Changes the frequency.
- Pressing and holding the key (over 0.8 seconds): Automatically searches for the next frequency.

Preset SEEK

Press the 1–6 key

- Shortly pressing the key (under 0.8 seconds): Plays the frequency saved in the corresponding key.
- Pressing and holding the key (over 0.8 seconds): Pressing and holding the desired key from 1–6 will save the currently playing broadcast to the selected key and sound a BEEP.

SCAN

Press the SCAN key

- Shortly pressing the key (under 0.8 seconds): The broadcast frequency increases and previews each broadcast for 5 seconds each.
  After scanning all frequencies, returns and plays the current broadcast frequency.
- Pressing and holding the key (over 0.8 seconds): Previews the broadcasts saved in Preset 1–6 for 5 seconds each.

Selecting through manual search

Turn the knob left/right to adjust the frequency.

- AM100A4GE / AM110A4GE
  - FM: Changes by 50KHz
  - AM: Changes by 9khz
- AM100A4GG / AM110A4GG
  - FM: Changes by 100KHz
  - AM: Changes by 9khz
- AM100A4GN / AM110A4GN
  - FM: Changes by 200KHz
  - AM: Changes by 10khz
- AM100A4GL / AM110A4GL
  - FM: Changes by 100KHz
  - AM: Changes by 10khz

MENU

Within the MENU key are the A.Store (Auto Store) and Info functions.



A.Store (Auto Store)

Press the MENU key ▶ Set [①A.Store] through knob or 1 RPT key.
Select A.Store (Auto Store) to save frequencies with superior reception to presets 1–6. If no frequencies are received, then the most recently received frequency will be broadcast.

Media mode

Press the MEDIA key to change the mod mode in order of CD ➡ USB (iPod) ➡ AUX ➡ My Music ➡ BT Audio.
The folder/file name is displayed on the screen.

- Audio CD



- CD MP3



- USB



• My Music



❊ The CD is automatically played when a CD is inserted.
❊ The USB music is automatically played when a USB is connected.

Repeat

While song (file) is playing ▶ 1 RPT (RPT) key
Audio CD, MP3 CD, USB, iPod, My Music mode: RPT on screen
• To repeat one song (Shortly pressing the key (under 0.8 seconds)): Repeats the current song.

MP3 CD, USB mode: FLD.RPT on screen
• To repeat folder (pressing twice): repeats all files within the current folder.

❊ Press the 1 RPT key again to turn off repeat.

Random

While song (file) is playing ▶ 2 RDM (RDM) key
Audio CD, My Music mode: RDM on screen
• Random (Shortly pressing the key): Plays all songs in random order.

MP3 CD, USB mode: FLD.RDM on screen
• Folder Random (Shortly pressing the key): Plays all files within the current folder in random order.

iPod mode: ALL RDM on screen
• All Random (Shortly pressing the key): Plays all files in random order.

MP3 CD, USB: ALL RDM on screen
• All Random (pressing twice): Plays all files in random order.

❊ Press the 2 RDM key again to turn off repeat.

Changing Song/File

• Shortly pressing the key: Plays the current song from the beginning.

❊ If the SEEK TRACK key is pressed again within 1 second, the previous song is played.

• Pressing and holding the key (over 0.8 seconds): Rewinds the song.

While song (file) is playing ▶ SEEK TRACK ^ key
• Shortly pressing the key: Plays the next song.
• Pressing and holding the key (over 0.8 seconds): Fast forwards the song.

Scan (for RDS model)

• Pressing and holding the TA/SCAN key (over 0.8 seconds): Scans all songs for 10 seconds starting from the next song.

❊ Pressing and holding the TA/SCAN key again to turn off.

Scan

• Shortly pressing the SCAN key: Scans all songs from the next song for 10 seconds each.

❊ Press the SCAN key again to turn off.
❊ The SCAN function is not supported in iPod mode.

Folder Search: MP3 CD, USB mode

• While file is playing ▶ PTY FOLDER ^/ FOLDER ^ (Folder Up) key: Searches the next folder.

- While file is playing ▶ PTY FOLDER / FOLDER (Folder Down) key: Searches the parent folder.

❊ If a folder is selected by pressing the knob, the first file within the selected folder will be played.
❊ In iPod mode, moves to the Parent Folder.

Searching Songs (File)

- Turning knob: Searches for songs (files)
- Pressing knob: Plays selected song (file).

MENU: Audio CD

Press the CD MP3 mode MENU key to set the Repeat, Random, Information features.



Repeat

Press the MENU key ▶ Set [①RPT] through the knob or 1 RPT key to repeat the current song.

❊ Press 1 RPT again to turn off.

Random

Press the MENU key ▶ Set [②RDM] through the knob or 2 RDM key to randomly play songs within the current folder.

❊ Press 2 RDM again to turn off.

Information

Press the MENU key ▶ Set [③Info] through the knob or 3 key to display information of the current song.

❊ Press the MENU key to turn off info display.

MENU: MP3 CD/USB

Press the CD MP3 mode MENU key to set the Repeat, Folder Random, Folder Repeat, All Random, Information, and Copy features.



Repeat

Press the MENU key ▶ Set [①RPT] through the knob or 1 RPT key to repeat the current song.

❊ Press RPT again to turn off.

Folder Random

Press the MENU key ▶ Set [②F.RDM] through the knob or 2 RDM key to randomly play songs within the current folder.

❊ Press F.RDM again to turn off.

Folder Repeat

Press the MENU key ▶ Set [③F.RPT] through the knob or 3 key to repeat songs within the current folder.

❊ Press F.RPT again to turn off.

All Random

Press the MENU key ▶ Set [④A.RDM] through the knob or 4 key to randomly play all songs within the CD.

❊ Press A.RDM again to turn off.

Information

Press the MENU key ▶ Set [⑤Info] through the knob or 5 key to display information of the current song.

❊ Press the MENU key to turn off info display.

Copy (if equipped)

Press the MENU key ▶ Set [⑥Copy] through the knob or 6 key.

- This is used to copy the current song into My Music. You can play the copied Music in My Music mode.

❊ If another key is pressed while copying is in progress, a pop up asking you whether to cancel copying is displayed.
❊ If another media is connected or inserted (USB, CD, iPod, AUX) while copying is in progress, copying is canceled.
❊ Music will not be played while copying is in progress.

MENU: iPod

In iPod mode, press the MENU key to set the Repeat, Album Random, All Random, Information and Search features.



Repeat

Press the MENU key ▶ Set [①RPT] through the knob or 1 RPT key to repeat the current song.
❊ Press RPT again to turn repeat off.

All Random

Press the MENU key ▶ Set [②RDM] through the knob or 2 RDM key.
Plays all songs within the currently playing category in random order.
❊ Press A.RDM again to turn off.

Information

Press the MENU key ▶ Set [③Info] through the knob or 3 key.
Displays information of the current song.
❊ Press the MENU key to turn off info display.

Search

Press the MENU key ▶ Set [④Search] through the knob or 4 key.
Displays iPod category list.
❊ Searching iPod category is MENU key pressed, move to parent category.

MENU: My Music Mode (if equipped)

In My Music mode, press the MENU key to set the Repeat, Random, Information, Delete, Delete All, and Delete Selection features.



Repeat

Press the MENU key ▶ Set [①RPT] through the knob or 1 RPT key.
Repeats the currently playing song.
❊ Press RPT again to turn repeat off.

Random

Press the MENU key ▶ Set [②RDM] through the knob or 2 RDM key.
Plays all songs in random order.
❊ Press RDM again to turn random off.

Information

Press the MENU key ▶ Set [③Info] through the knob or 3 key.
Displays information of the current song.
❊ Press the MENU key to turn off info display.

Delete

Press the MENU key ▶ Set [④Delete] through the knob or 4 key.

- Deletes currently playing file
  In the play screen, pressing delete will delete the currently playing song.
- Deletes file from list



1. Select the file you wish to delete by using the knob.
2. Press the MENU key and select the delete menu to delete the selected file.

Delete All

Press the MENU key ▶ Set [⑤Del.All] through the knob or 5 key.
Deletes all songs of My Music.

Delete Selection

Press the MENU key ▶ Set [⑥Del.Sel] through the knob or 6 key.
Songs within My Music are selected and deleted.

1. Select the songs you wish to delete from the list.



2. After selecting, press the MENU key and select the delete menu.



✻ NOTICE

■ USING My Music

- Even if memory is available, a maximum of 6,000 songs can be stored.

(Continued)

(Continued)

- The same song can be copied up to 1,000 times.
- Memory info can be checked in the System menu of Setup.

AUX

AUX is used to play external MEDIA currently connected with the AUX terminal.
AUX mode will automatically start when an external device is connected with the AUX terminal.
If an external device is connected, you can also press the MEDIA key to change to AUX mode.



✻ AUX mode cannot be started unless there is an external device connected to the AUX terminal.

✻ NOTICE

■ USING THE AUX

Fully insert the AUX cable into the AUX terminal for use.

Bluetooth® Wireless Technology audio (if equipped)

What is Bluetooth® Wireless Technology?

Bluetooth® Wireless Technology is a wireless technology that allows multiple devices to be connected in a short range, low-powered devices like hands-free, stereo headset, wireless remote controller, etc. For more information, visit the Bluetooth® Wireless Technology website at www.Bluetooth.com

Before using Bluetooth® Wireless Technology audio features

- Bluetooth® Wireless Technology audio may not be supported depending on the compatibility of your Bluetooth® Wireless Technology mobile phone.
- In order to use Bluetooth® Wireless Technology audio, you must first pair and connect the Bluetooth® Wireless Technology mobile phone.
- Bluetooth® Wireless Technology audio can be used only when the [Audio Streaming] of Phone is turned On.

✻ Setting Bluetooth® Wireless Technology Audio Streaming: Press the SETUP key ▶ Select [Phone] through the tune knob ▶ Select [Audio Streaming] through the knob ▶ Set ON/OFF

Starting Bluetooth® Wireless Technology Audio

- Press the MEDIA key to change the mode in order of CD ➡ USB ➡ AUX ➡ My Music ➡ BT Audio.
- If BT Audio is selected, Bluetooth® Wireless Technology audio will start playing.

✻ Audio may not automatically start playing in some mobile phones.

Using the Bluetooth® Wireless Technology audio features

- Play/Pause

Press the knob to play and pause the current song.



✻ The previous song/next song/play/pause functions may not be supported in some mobile phones.

Phone (if equipped)

Before using the Bluetooth® Wireless Technology phone features

- In order to use Bluetooth® Wireless Technology phone, you must first pair and connect the Bluetooth® Wireless Technology mobile phone.
- If the mobile phone is not paired or connected, it is not possible to enter Phone mode. Once a phone is paired or connected, the guidance screen will be displayed.

- If Priority is set upon vehicle ignition (IGN/ACC ON), the Bluetooth® Wireless Technology phone will be automatically connected. Even if you are outside, the Bluetooth® Wireless Technology phone will be automatically connected once you are in the vicinity of the vehicle. If you do not want automatic Bluetooth® Wireless Technology phone connection, set the Bluetooth® Wireless Technology power to OFF.

Making a call using the steering remote controller

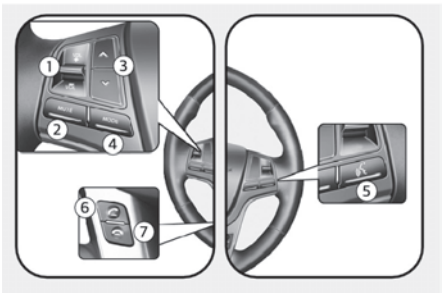

1. VOLUME button: Raises or lowers speaker volume.
2. MUTE button: Mute the microphone during a call.
3. button: Activates voice recognition.
4. button: Places and transfers calls.
5. button : Ends calls or cancels functions.

- Check call history and making call
  1. Shortly press (under 0.8 seconds) the key on the steering remote controller.
  2. The call history list will be displayed on the screen.
  3. Press the key again to connect a call to the selected number.
- Redialing the most recently called number
  1. Press and hold (over 0.8 seconds) the key on the steering remote controller.
  2. The most recently called number is redialed.

Phone menu (for RDS model)

Press the PHONE key to display three menus (Call History, Phone Book, Phone Setup).

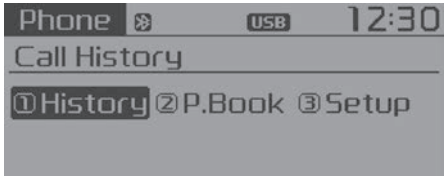

Call history

Press the PHONE key ▶ Set [①History] through the knob or 1 RPT key.
The call history is displayed and can be used to select a number and make a call.
If call history does not exist, a screen asking whether to download call history is displayed. (The download feature may not be supported in some mobile phones)

Phone Book

Press the PHONE key ▶ Set [②P.Book] through the knob or 2 RDM key.
The phone book is displayed and can be used to select a number and make a call.

✻ If more than one number is saved to one contact, then a screen showing the mobile phone number, Home and office number is displayed. Select the desired number to make the call.

❈ If phone book do not exist, a screen asking whether to download phone book is displayed. (The download feature may not be supported in some mobile phones)

Phone Setup

Press the PHONE key ▶ Set [③Setup] through the knob or 3 key.
The Bluetooth® Wireless Technology mobile phone setup screen is displayed. For more information, refer to "Phone setup" on page 5-19.

Phone menu

Press the PHONE key to display three menus (Call History, Phone Book, Phone Setup).

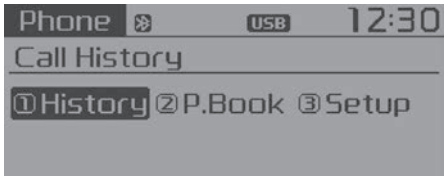

Call history

Press the PHONE key ▶ Set [①History] through the knob or 1 RPT key.
The call history is displayed and can be used to select a number and make a call.

If call history does not exist, a screen asking whether to download call history is displayed. (The download feature may not be supported in some mobile phones)

Contacts

Press the PHONE key ▶ Set [②Contacts] through the knob or 2 RDM key.
The Contacts are displayed and can be used to select a number and make a call.

❈ If more than one number is saved to one contact, then a screen showing the mobile phone number, Home and office number is displayed. Select the desired number to make the call.

❈ If Contacts do not exist, a screen asking whether to download Contacts is displayed. (The download feature may not be supported in some mobile phones)

Phone Setup

Press the PHONE key ▶ Set [③Setup] through the knob or 3 key.
The Bluetooth® Wireless Technology mobile phone setup screen is displayed. For more information, refer to "Phone setup" on page 5-25.

❈ NOTICE

■ USING THE Bluetooth® Wireless Technology CELLULAR PHONE

- Do not use a cellular phone or perform Bluetooth® Wireless Technology settings (e.g. pairing a phone) while driving.
- Some Bluetooth® Wireless Technology -enabled phones may not be recognized by the system or fully compatible with the system.
- Before using Bluetooth® Wireless Technology related features of the audio system, refer your phone's User's Manual for phone-side Bluetooth® Wireless Technology operations.
- The phone must be paired to the audio system to use Bluetooth® Wireless Technology related features.

(Continued)

(Continued)

- You will not be able to use the hands-free feature when your phone (in the car) is outside of the cellular service area (e.g. in a tunnel, in a underground, in a mountainous area, etc.).
- If the cellular phone signal is poor or the vehicles interior noise is too loud, it may be difficult to hear the other person's voice during a call.
- Do not place the phone near or inside metallic objects, otherwise communications with Bluetooth® Wireless Technology system or cellular service stations can be disturbed.
- While a phone is connected through Bluetooth® Wireless Technology your phone may discharge quicker than usual for additional Bluetooth® Wireless Technology-related operations.

(Continued)

(Continued)

- Some cellular phones or other devices may cause interference noise or malfunction to audio system. In this case, store the device in a different location may resolve the condition.
- Phone contact names should be saved in English or they may not be displayed correctly.
- If Priority is set upon vehicle ignition (IGN/ACC ON), the Bluetooth® Wireless Technology phone will be automatically connected.
  Even if you are outside, the Bluetooth® Wireless Technology phone will be automatically connected once you are in the vicinity of the vehicle.
  If you do not want automatic Bluetooth® Wireless Technology connection, turn the Bluetooth® Wireless Technology feature off.

(Continued)

(Continued)

- The hands-free call volume and quality may differ depending on the mobile phone type.
- Bluetooth® Wireless Technology features can be used only when the mobile phone has been paired and connected with the device. For more information on pairing and connecting Bluetooth® Wireless Technology enabled mobile phones, refer to "Phone setup" on page 5-25.
- When a Bluetooth® Wireless Technology mobile phone is connected, a ( ) icon will appear at the top of the screen. If a ( ) icon is not displayed, this indicates that a Bluetooth® Wireless Technology enabled device has not been connected. You must connect the device before use. For more information on Bluetooth® Wireless Technology mobile phones, refer to "Phone setup" on page 5-25.

(Continued)

(Continued)

- Pairing and connecting a Bluetooth® Wireless Technology enabled mobile phone will work only when the Bluetooth® Wireless Technology option within your mobile phone has been turned on. (Methods of turning on the Bluetooth® Wireless Technology enabled feature may differ depending on the mobile phone.)
- In some mobile phones, starting the ignition while talking through Bluetooth® Wireless Technology enabled handsfree call will result in the call becoming disconnected. (Switch the call back to your mobile phone when starting the ignition.)
- Some features may not be supported in some Bluetooth® Wireless Technology mobile phone and devices.

(Continued)

(Continued)

- Bluetooth® Wireless Technology enabled operation may be unstable depending on the communication state.
- Placing the audio system within an electromagnetic environment may result in noise interference.

Voice command (if equipped)

✻ NOTICE

■ USING VOICE COMMAND

- The voice recognition feature of this product supports recognition of the commands listed in "Voice command list" on page 5-43.
- While using voice recognition, operating the steering remote control or the device will terminate voice recognition and allow you to manually operate desired functions.

(Continued)

(Continued)

- Position the microphone above the head of the driver's seat. For superior performance, maintain good posture when saying voice commands.
- Voice recognition may not function properly due to outside noise. The following conditions can affect the performance of Voice Recognition:
  - When the windows and sunroof are open
  - When the heating/cooling system is on
  - When passing a tunnel
  - When driving on rugged and uneven roads
- After downloading Bluetooth® Wireless Technology phone book, the system requires some times to convert the phone book into voice information. During this time, voice recognition may not operate properly.

(Continued)

(Continued)

- Upon inputting your phone book, special symbols and numbers cannot be recognized by voice. For example, "# John Doe%&" will be recognized as "John Doe".

Starting voice command

- To start voice command, shortly press the key on the steering wheel remote controller.
- If voice command is in [Normal Mode], then the system will say "Please say a command. Beep"

❇ If voice command is in [Expert Mode], then the system will only say a "Beep-"

❇ Setting Voice command [Normal Mode]/[Expert Mode]:
Press the SETUP key ▶ Select [System] through the knob or 5 key ▶ Select [Voice Command Mode] through the knob ▶ Set [Normal Mode]/[Expert Mode]

- Say the voice command.

✻ NOTICE

For proper voice recognition, say the voice command after the guidance message and the "Beep" sound.

Skipping the guidance message

While the guidance message is being stated, shortly press the key (under 0.8 seconds) to discontinue the guidance message and sound the "beep".
After the "beep", say the voice command.



Ending voice command

- While using voice command, press and hold the key (over 0.8 seconds) to end voice command.
- While using voice command, pressing the steering wheel remote controller or a different key will end voice command.
- In a state where the system is waiting for your voice command, say "cancel" or "end" to end voice command.
- In a state where the system is waiting for your voice command, shortly press the key (under 0.8 seconds) to end voice command.

Illustration on using voice commands

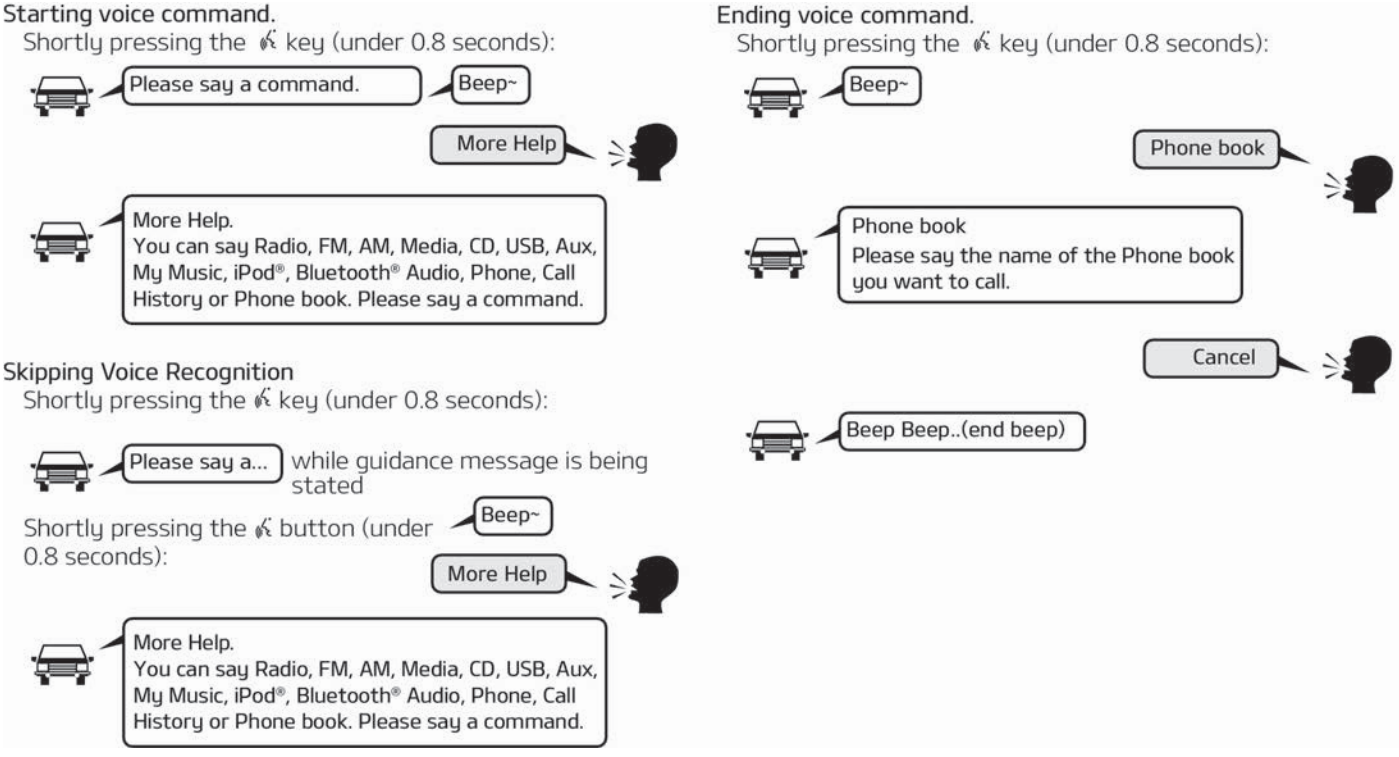

Voice command list

• Common Commands: These are commands that can be used in all situations. (However, some commands may not be supported in special circumstances.)

Command	Function
More Help	Provides guidance on commands that can be used anywhere in the system.
Help	Provides guidance on commands that can be used within the current mode.
Call<Name>	Calls <Name> saved in phone book Ex) Call "John"
Phone	Provides guidance on Phone related commands. After saying this command, say "Call History", "Phone book", "Dial Number" to execute corresponding functions.
Call History	Displays the Call History screen.
Phone book	Displays the phone book screen. After saying this command, say the name of a phone book saved in the phone book to automatically connect the call.
Dial Number	Display the Dial number screen. After saying this command, you can say the number what you want to call.
Redial	Connects the most recently called number.
Radio	- When listening to the radio, displays the next radio screen. (FM1➟FM2➟FMA➟AM➟AMA) - When listening to a different mode, displays the most recently played radio screen.
FM	- When currently listening to the FM radio, maintains the current state. - When listening to a different mode, displays the most recently played FM screen.
FM1(FM One)	Displays the FM1 screen.
FM2(FM Two)	Displays the FM2 screen.
FMA	Displays the FMA screen.
AM	Displays the AM screen.
AMA	Displays the AMA screen.
FM Preset 1~6	Plays the most recently played broadcast saved in FM Preset 1~6.
AM Preset 1~6	Plays the broadcast saved in AM Preset 1~6.
FM 87.5~107.9	Plays the FM broadcast of the corresponding frequency.
AM 530~1710	Plays the AM broadcast of the corresponding frequency.
TA on	Enable Traffic Announcement

Command	Function
TA off	Disable Traffic Announcement
News on	Enable RDS News feature
News off	Disable RDS News feature
Media	Moves to the most recently played media screen.
Play Track 1~30	If a music CD has been inserted, plays the corresponding track.
CD	Plays the music saved in the CD.
Search CD	Moves to the CD track or file selection screen. - For audio CDs, move to the screen and say the track number to play the corresponding track. - Moves to MP3 CD file selection screen. After manually operate the device to select and play music.
USB	Plays USB music.
Search USB	Moves to USB file selection screen. After manually operate the device to select and play music.
iPod	Plays iPod music.
Search iPod	Moves to the iPod file selection screen. After, manually operate the device to select and play music.
My Music	Plays the music saved in My Music.

Command	Function
Search My Music	Moves to My Music file selection screen. After manually operate the device to select and play music.
AUX (Auxiliary)	Plays the connected external device.
Bluetooth Audio	Plays the music saved in connected Bluetooth® Wireless Technology device.
Mute	Mutes the radio or music volume.
Pardon?	Repeats the most recent comment.
Cancel (Exit)	Ends voice command.

• FM/AM radio commands: Commands that can be used while listening to FM, AM radio.

Command	Function
Preset 1~6	Plays the broadcast saved in Preset 1~6.
Auto Store	Automatically selects radio broadcast frequencies with superior reception and saves in Presets 1~6.
Preset Save 1~6	Saves the current broadcast frequency to Preset 1~6.
Seek up	Plays the next receivable broadcast.
Seek down	Plays the previous receivable broadcast.

Command	Function
Next Preset	Selects the preset number next to the most recently selected preset. (Example: When currently listening to preset no. 3, then preset no. 4 will be selected.)
Previous Preset	Selects the preset number previous to the most recently selected preset. (Example: When currently listening to preset no. 3, then preset no. 2 will be selected.)
Scan	Scans receivable frequencies from the current broadcast and plays for 10 seconds each.
Preset Scan	Moves to the next preset from the current present and plays for 10 seconds each.
AF on	Enable Alternative Frequency feature
AF off	Disable Alternative Frequency feature
Region	Enable Region feature
Region off	Disable Region feature

• Audio CD commands: Commands that can be used while listening to Audio CD.

Command	Function
Program Type	Moves to the RDS Program type selection screen. After, manually operate the device to select a desired program type.
Random	Randomly plays the tracks within the CD.
Random Off	Cancels random play to play tracks in sequential order.
Repeat	Repeats the current track.
Repeat Off	Cancels repeat play to play tracks in sequential order.
Next Track	Plays the next track.
Previous Track	Plays the previous track.
Scan	Scans the tracks from the next track for 10 seconds each.
Track 1~30	Plays the desired track number.
Search Track	Moves to the track selection screen. After, say the track name to play the corresponding track.
Information	Displays the information screen of the current track.

• MP3 CD / USB commands: Commands that can be used while listening to music files saved in CD and USB.

Command	Function
Random	Randomly plays the files within the current folder.
All Random	Randomly plays all saved files.

Command	Function
Random Off	Cancels random play to play files in sequential order.
Repeat	Repeats the current file.
Folder Repeat	Repeats all files in the current folder.
Repeat Off	Cancels repeat play to play files in sequential order.
Next File	Plays the next file.
Previous File	Plays the previous file.
Scan	Scans the files from the next files for 10 seconds each.
Search File	Moves to the file selection screen.
Search Folder	Moves to the folder selection screen.
Information	Displays the information screen of the current file.
Copy	Copies the current file into My Music.

- iPod Commands: Commands that can be used while playing iPod.

Command	Function
All Random	Randomly plays all saved songs.
Random	Randomly plays the songs within the current category.
Random Off	Cancels random play to play songs in sequential order.
Repeat	Repeats the current song.
Repeat Off	Cancels repeat play to play songs in sequential order.
Next Song	Plays the next song.
Previous Song	Plays the previous song.
Search Song	Moves to the song selection screen.
Information	Displays the information screen of the current song.

- My Music Commands: Commands that can be used while playing My Music.

Command	Function
Random	Randomly plays all saved files.
Random Off	Cancels random play to play files in sequential order.
Repeat	Repeats the current file.
Repeat Off	Cancels repeat play to play files in sequential order.
Next File	Plays the next file.
Previous File	Plays the previous file.
Scan	Scans the files from the next files for 10 seconds each.
Search File	Moves to the file selection screen.

Command	Function
Information	Displays the information screen of the current file.
Delete	Deletes the current file. You will bypass an additional confirmation process.
Delete All	Deletes all files saved in My Music. You will bypass an additional confirmation process.

- Bluetooth® Wireless Technology Audio Commands: Commands that can be used while playing Phone Music.

Command	Function
Play	Plays the currently paused song.
Pause	Pauses the current song.

AUDIO (WITH TOUCH SCREEN)

CD Player (for RDS model): AM111A4EE



RP050102

Feature of your audio

❉ Display and settings may differ depending on the selected audio.

Audio head unit (for RDS model)



1. (EJECT)
   - Ejects the disc.
2. RADIO
   - Changes to Radio (FM/AM) mode.
   - Each time the key is pressed, the mode is changed in order of FM1 ➟ FM2 ➟ FMA ➟ AM ➟ AMA.
3. MEDIA
   - Start Media mode.
   - Each time the key is pressed, the mode is changed in order of CD, USB (iPod), AUX, My Music, BT Audio.
4. PHONE (for Bluetooth® Wireless Technology equipped model)
   - Converts to Phone mode.
   - When a phone is not connected, the connection screen is displayed.
5. POWER/VOL knob
   - Power: Press to turn power on/off.
   - Volume: Turn left/right to control volume.
6. SEEK TRACK

   When pressed shortly (under 0.8 seconds)
   - Radio mode: plays previous/next frequency.
   - Media (CD/USB/iPod/My Music) modes: changes the track, Song(file).

   When pressed and held (over 0.8 seconds)
   - Radio mode: continuously changes the frequency. Upon release, plays the current frequency.
   - Media (CD/USB/iPod/My Music) modes: rewinds or fast forwards the track or file.
   - During a handsfree call, controls the call volume.
7. PTY FOLDER
   - RDS Radio mode: searches RDS program types.
   - CD/USB/MP3 modes: searches folders.



8.
   - Turns the monitor display on/off.
9. CLOCK
   - Displays the time/date/day.

10. TA/SCAN
    - Radio mode:
      - Short key: TA On/Off
      - Long key: previews all receivable broadcasts for 5 seconds each.
    - Media (CD/USB/iPod/My Music) modes: previews each song (file) for 10 seconds each.

11. SETUP
    - Converts to Setup mode.

12. TUNE knob
    - Radio mode: turn to change broadcast frequencies.
    - Media (CD/USB/iPod/My Music) modes: turn to search tracks/channels/files.

13. RESET
    - Forced system termination and system restart.

CD Player: AM111A4GG, AM111A4GN, AM111A4GE, AM111A4GL



RP050103

Feature of your audio

❇ Display and settings may differ depending on the selected audio.

Audio head unit



1. ⏏ (EJECT)
   - Ejects the disc.
2. RADIO
   - Changes to Radio (FM/AM) mode.
   - Each time the key is pressed, the mode is changed in order of FM1 ➟ FM2 ➟ AM.
3. MEDIA
   - Start Media mode.
   - Each time the key is pressed, the mode is changed in order of CD, USB (iPod), AUX, My Music, BT Audio.
4. PHONE
   - Converts to Phone mode.
   - When a phone is not connected, the connection screen is displayed.
5. POWER/VOL knob
   - Power knob: Press to turn power on/off.
   - Volume knob: Turn left/right to control volume.
6. SEEK TRACK

   When pressed shortly (under 0.8 seconds)
   - Radio mode: plays previous/next frequency.
   - Media (CD/USB/iPod/My Music) modes: changes the track, Song(file).

   When pressed and held (over 0.8 seconds)
   - Radio mode: continuously changes the frequency. Upon release, plays the current frequency.
   - Media (CD/USB/iPod/My Music) modes: rewinds or fast forwards the track or file.
   - During a handsfree call, controls the call volume.
7. FOLDER
   - CD/USB/MP3 modes: searches folders.



8. DISP
   - Turns the monitor display on/off.
9. CLOCK
   - Displays the time/date/day.
10. SCAN
    - Radio Mode: previews all receivable broadcasts for 5 seconds each

• Media (CD/USB/iPod/My Music) modes: previews each song (file) for 10 seconds each.

11. SETUP
    • Converts to Setup mode.
12. TUNE knob
    • Radio mode: turn to change broadcast frequencies.
    • Media (CD/USB/iPod/My Music) modes: turn to search tracks/ channels/files.
13. RESET
    • Forced system termination and system restart.

Steering remote controller

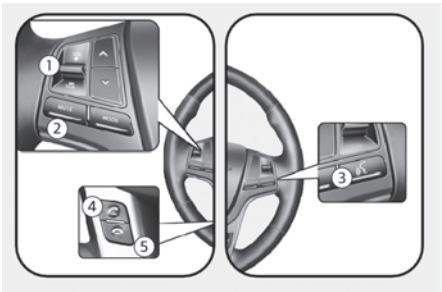

1. VOLUME
   Used to control volume.
2. MUTE
   Mutes audio volume.
3. SEEK
   When pressed shortly (under 0.8 seconds)
   - Radio mode: searches broadcast frequencies saved to presets.
   - Media(CD/USB/iPod/My Music/BT Audio) modes: changes the track, file or chapter.

   When pressed and held (over 0.8 seconds)
   - Radio mode: automatically searches broadcast frequencies and channels
   - Media(CD/USB/iPod/My Music) modes: rewinds or fast forwards the track or song(file)
4. MODE
   Each time this key is pressed, the mode is changed in order of FM1 ➡ FM2 ➡ FMA ➡ AM ➡ AMA ➡ USB or iPod ➡ AUX ➡ My Music ➡ BT Audio
   If the media is not connected or a disc is not inserted, corresponding modes will be disabled.
5. (if equipped)

   When pressed shortly (under 0.8 seconds)
   - Starts voice recognition
   - When selecting during a voice prompt, stops the prompt and converts to voice command waiting state

   When pressed and held (over 0.8 seconds)
   - Ends voice recognition
6.
   When pressed shortly (under 0.8 seconds)
   - When pressed in the phone screen, displays call history screen
   - When pressed in the dial screen, makes a call
   - When pressed in the incoming call screen, answers the call
   - When pressed during call waiting, switches to waiting call (Call Waiting)

   When pressed and held (over 0.8 seconds)
   - When pressed in the Bluetooth® Wireless Technology Handsfree wait mode, redials the last call

- When pressed during a Bluetooth® Wireless Technology Handsfree call, switches call back to mobile phone (Private)
- When pressed while calling on the mobile phone, switches call back to Bluetooth® Wireless Technology Handsfree (Operates only when Bluetooth® Wireless Technology Handsfree is connected)

7. 
   Ends phone call

Radio mode (for RDS model)

AM111A4EE

Basic mode screen





1. Mode Display
   Displays currently operating mode
2. Frequency
   Displays the current frequency
3. Preset
   Displays current preset number [1]-[6]
4. Preset Display
   Displays saved presets
5. Autostore
   Automatically saves frequencies with superior reception to Preset buttons
6. RDS Menu
   Displays the RDS Menu
7. RDS Info
   Displays RDS broadcast information

Switching to radio mode

Pressing the RADIO key will change the operating mode in order of FM1 ➟ FM2 ➟ FMA ➟ AM ➟ AMA.



If [Pop-up Mode] / [Mode Pop-up] is turned on within SETUP ▶ [Display], then pressing the RADIO key will display the Radio Pop-up Mode screen.

Turn the knob to move the focus. Press the knob to select.

Searching radio frequencies

Using Seek

Press the SEEK TRACK key to play the previous/next frequency.

Using TUNE

Turn the TUNE knob to select the desired frequency.

- FM: Increases/decreased by 50kHz
- AM: Increases/decreased by 9kHz

Using radio mode

Selecting/Saving Presets

Press the [1]-[6] buttons to play the desired preset.



Press the button to display the broadcast information for the frequency saved to each button.



✻ NOTICE

While listening to a frequency you want to save as a preset, press and hold one of the [1]-[6] preset buttons (over 0.8 seconds) to save the current frequency to the selected preset.

Auto Store

Press the button to automatically save receivable frequencies to Preset buttons.

✻ NOTICE

While Auto Store is operating, pressing the [Cancel] button again will cancel Auto Store and restore the previous frequency.

RDS Menu

Press the button to set the AF (Alternative Frequency), Region and News features.



✻ NOTICE

The RDS Menu is not supported within AM or AMA mode.

Scan

- Radio Mode
  - Press the key (under 0.8 seconds): Previews each broadcast for 5 seconds each
- CD, USB, My Music mode
  - Press the key (under 0.8 seconds): Previews each song (file) for 10 seconds each
- Press the key again to continue listening to the current song (file).

✻ NOTICE

Once scan is complete, the previous frequency will be restored.
While Scan is operating, pressing the TA/SCAN key will cancel the scan operation.

Program type

Press the PTY FOLDER key to search for the desired Program type.



Turn the knob left/right to search for the desired program type. Once you find the desired program type, press the knob.
After selecting the desired Program Type and while the Program Type is blinking (approximately 5 seconds), pressing the SEEK TRACK key will allow you to select a different Program Type broadcast.

TA (Traffic Announcement)

Press the TA/SCAN key to turn the TA (Traffic Announcement) feature On/Off.



Radio mode

AM111A4GG, AM111A4GN
AM111A4GE, AM111A4GL

Basic mode screen



1. Mode Display
   Displays currently operating mode
2. Frequency
   Displays the current frequency
3. Preset
   Displays current preset number [1]-[6]
4. Preset Display
   Displays saved presets
5. Autostore
   Automatically saves frequencies with superior reception to Preset buttons

Switching to radio mode

Pressing the RADIO key will change the operating mode in order of FM1 ➡ FM2 ➡ AM.
If [Mode Pop-up] is turned on within SETUP ▶ [Display], then pressing the RADIO key will display the Radio Pop-up Mode screen.



Turn the knob to move the focus. Press the knob to select.

Searching radio frequencies

Using Seek

Press the SEEK TRACK key to play the previous/next frequency.

Using TUNE

Turn the knob to select the desired frequency.

- FM: Increases/decreased by 100kHz
- AM: Increases/decreased by 9kHz

Using radio mode

Selecting/Saving Presets

Press the [Preset] button to display the broadcast information for the frequency saved to each button.



Press the [1]-[6] buttons to play the desired preset.

✻ NOTICE

While listening to a frequency you want to save as a preset, press and hold one of the [1]-[6] preset buttons (over 0.8 seconds) to save the current frequency to the selected preset.

Auto Store

Press the [A.store] button to automatically save receivable frequencies to Preset buttons.

Scan

Press the SCAN key to preview frequencies with superior reception for 5 seconds each.
Press and hold the SCAN key (over 0.8 seconds) to preview presets for 5 seconds each.

✻ NOTICE

Once scan is complete, the previous frequency will be restored.

(Continued)

(Continued)

While Scan is operating, pressing the SCAN key will cancel the scan operation.

Media mode

AM111A4GG, AM111A4GN
AM111A4GE, AM111A4GL
AM111A4EE

Switching to Media Mode

Pressing the MEDIA key will change the operating mode in order of CD ➡ USB (iPod) ➡ AUX ➡ My Music ➡ BT Audio.



If [Pop-up Mode]/[Mode Pop-up] is turned on within SETUP ▶ [Display], then pressing the MEDIA key will display the Media Pop-up Mode screen.

Turn the knob to move the focus. Press the knob to select.

✻ NOTICE

The media mode pop up screen can be displayed only when there are two or more media modes turned on.

Title Icon

When a Bluetooth® Wireless Technology, iPod®, USB or AUX device is connected or a CD is inserted, the corresponding mode icon will be displayed.



Icon	Title
	Bluetooth® WirelessTechnology
	CD
	iPod®
	USB
	AUX

Audio CD mode

Basic mode screen



<for RDS model>



1. Mode
   Displays currently operating mode
2. Operation State
   From Repeat/Random(Shuffle)/ Scan, displays the currently operating function
3. Track Info
   Displays information about the current track
4. Play/Pause
   Changes the play/pause state
5. Play Time
   Displays the current play time
6. Info
   Shows detailed information about the current track
7. Random(Shuffle)
   Turns the Random(Shuffle) feature on/off
8. Repeat
   Turns the Repeat feature on/off
9. List
   Moves to the list screen

Using audio CD mode

Playing/Pausing CD Tracks

Once an audio CD is inserted, the mode will automatically start and begin playing.

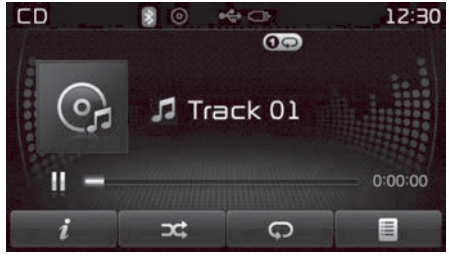

<for RDS model>



While playing, press the ⏸ button to pause and press ▶ button to play.

✻ NOTICE

- Only genuine audio CDs are supported. Other discs may result in recognition failure (e.g. copy CDR, CDs with labels)
- The artist and title information are displayed on the screen if track information is included within the audio CD.

Changing Tracks
Press the SEEK TRACK key to move to the previous or next track.

✻ NOTICE

- Pressing the SEEK TRACK key after the track has been playing for 2 seconds will start the current track from the beginning.
- Pressing the SEEK TRACK key before the track has been playing for 1 seconds will start the previous track.

Selecting from the List
Turn the knob left/right to search for the desired track.

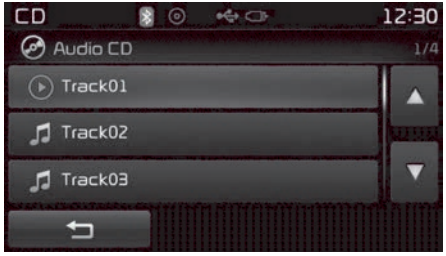

Once you find the desired track, press the knob to start playing.

Rewinding/Fast-forwarding Tracks
While playing, press and hold the SEEK TRACK key (over 0.8 seconds) to rewind or fast-forward the current track.

Scan
Press the SCAN key to play the first 10 seconds of each file.
Press the SCAN key again to turn off.
Press and hold the TA/SCAN key to play the file 10 seconds of each file.
Pressing and holding the TA/SCAN key again to turn off.

Audio CD mode menu

Within this mode, you will have access to the Info, Random(Shuffle), Repeat and List features.

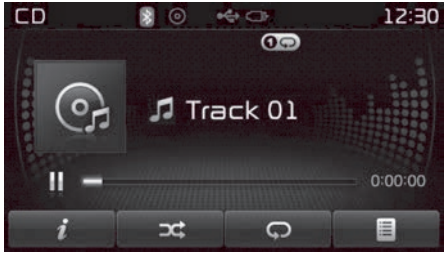

<for RDS model>



Info
Press the (Info) button to display details about the current disc.

Random(Shuffle)
Press the (Shuffle) button to play tracks in random(Shuffle) order.
Press the button again to turn the Random(Shuffle) feature off.
- Random(Shuffle): Plays all tracks in random(Shuffle) order.

Repeat
Press the (Repeat) button to repeat the current track. Press the button again to turn the repeat feature off.
• Repeat: Repeats the current track.

List
Press the (List) button to display the track list screen.

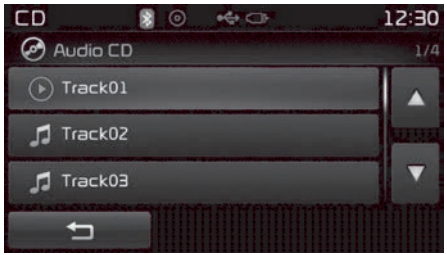

Turn the knob left/right to search for tracks. Once the desired track is displayed, press the knob to select and play.

MP3 CD mode

Basic mode screen



<for RDS model>

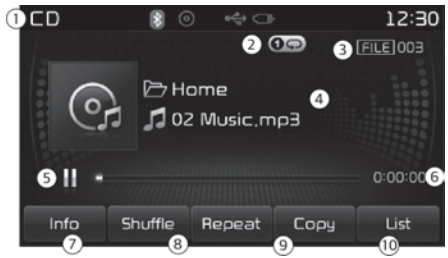

1. Mode
   Displays currently operating mode
2. Operation State
   From Repeat/Random(Shuffle)/ Scan, displays the currently operating function
3. File Index
   Displays the current file number
4. File Info
   Displays information about the current file
5. Play/Pause
   Changes the play/pause state
6. Play Time
   Displays the current play time
7. Info
   Shows detailed information about the current file
8. Random(Shuffle)
   Turns the Random(Shuffle) feature on/off
9. Repeat
   Turns the Repeat feature on/off
10. Copy
    Copies the current file into My Music
11. List
    Moves to the list screen

Using MP3 CD mode

Playing/pausing MP3 files
Once an MP3 disc is inserted the mode will automatically start and being playing.

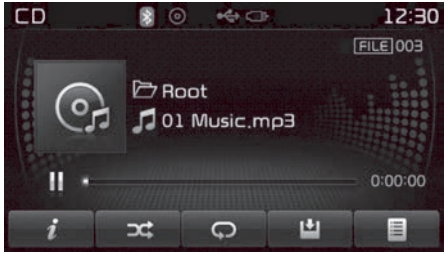

<for RDS model>

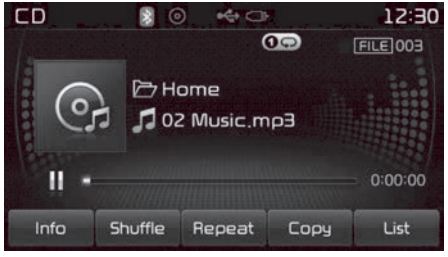

While playing, press the ⏸ button to pause and press ▶ button to play.

✻ NOTICE

If there are numerous files and folders within the disc, reading time

(Continued)

(Continued)

could take more than 10 seconds and the list may not be displayed or song searches may not operate. Once loading is complete, try again.

Changing files
Press the SEEK TRACK key to move to the previous or next track.

✻ NOTICE

- Pressing the SEEK TRACK key after the file has been playing for 2 seconds will start the current file from the beginning.
- Pressing the SEEK TRACK key before the file has been playing for 1 seconds will start the previous file.

Selecting from the List
Turn the knob left/right to search for the desired file.

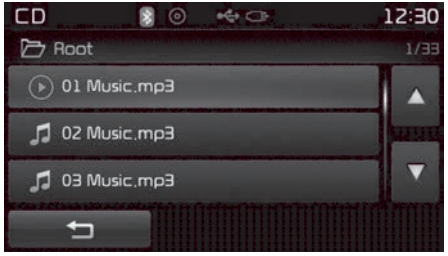

Once you find the desired file, press the knob to start playing.

Rewinding/Fast-forwarding files
While playing, press and hold the SEEK TRACK key (over 0.8 seconds) to rewind or fast-forward the current file.

Scan
Press the SCAN key to play the first 10 seconds of each file.
Press the SCAN key again to turn off.
Press and hold the TA/SCAN key to play the file 10 seconds of each file.
Pressing and holding the TA/SCAN key again to turn off.

Searching folders
Press the PTY FOLDER (FOLDER) key to select and search folders.
Once the desired folder is displayed, press the knob to select.



The first file within the selected folder will begin playing.

MP3 CD mode menu

Within this mode, you will have access to the Info, Random(Shuffle), Repeat, Copy and List features.

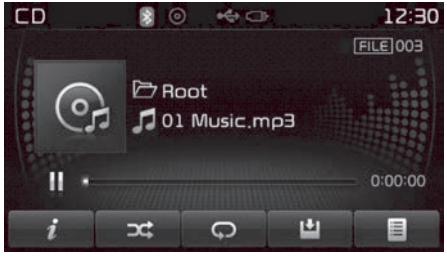

<for RDS model>

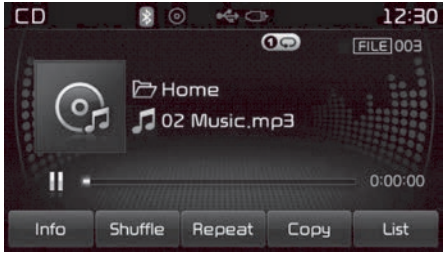

Info

Press the (Info) button to display details about the current file.

NOTICE

- When the 'Folder File' option is set as the default display within Display setup, the album/artist/file information are displayed as detailed file information.
- When the 'Album Artist Song' option is set as the default display, the folder name/file name are displayed as detailed file information.

(Continued)

(Continued)

- The title, artist and album info are displayed only when such information are recorded within the MP3 file ID3 tag.

Random (Shuffle)

Press the (Shuffle) button to play files in random(Shuffle) order.
Each time the button is pressed, the feature changes in order of Random (Shuffle) Folder ➟ Random (Shuffle) All ➟ Off.

- Random (Shuffle) Folder: Plays all files within the current folder in Random (Shuffle) order.
- Random (Shuffle) All: Plays all files in Random (Shuffle) order.

Repeat

Press the (Repeat) button to repeat the current file or folder.
Each time the button is pressed, the feature changes in order of Repeat ➟ Repeat Folder ➟ Off.

- Repeat: Repeats the current file.
- Repeat Folder: Repeats all files within the current Folder.

Copying Files

Press the (Copy) button to copy the current file into My Music.

✻ NOTICE

Selecting another feature during copying will display a pop-up asking whether you wish to cancel copying. To cancel, select 'Yes'.

List

Press the (List) button to display the track list screen.

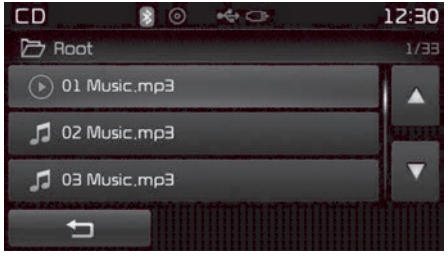

Turn the knob left/right to search for files. Once the desired file is displayed, press the knob to select and play.

USB mode

✻ NOTICE

■ USING THE USB DEVICE

- Connect the USB device after turning on the engine. The USB device may become damaged if it is already connected when the ignition is turned on. The USB device may not operate properly if the car ignition is turned on or off with the USB device connected.
- Heed caution to static electricity when connecting/disconnecting USB devices.
- Encoded MP3 Players will not be recognized when connected as an external device.
- When connecting an external USB device, the device may not properly recognize the USB is in some states.

(Continued)

(Continued)

- Only products formatted with byte/sectors under 64 Kbyte will be recognized.
- This device recognizes USB devices formatted in FAT 12/16/32 file formats. This device does not recognize files in NTFS file format.
- Some USB devices may not be supported due to compatibility issues.
- Avoid contact between the USB connector with bodily parts or foreign objects.
- Repeated connecting/disconnecting of USB devices within short periods of time may result in product malfunction.
- A strange noise may occur when disconnecting the USB.
- Make sure to connect/disconnect external USB devices with the audio power turned off.

(Continued)

(Continued)

- The amount of time required to recognize the USB device may differ depending on the type, size or file formats stored in the USB. Such differences in time are not indications of malfunctions.
- The device only supports USB devices used to play music files.
- USB images and videos are not supported.
- Do not use the USB I/F to charge batteries or USB accessories that generate heat. Such acts may lead to worsened performance or damage to the device.
- The device may not recognize the USB device if separately purchased USB hubs and extension cables are being used. Connect the USB directly with the multimedia terminal of the vehicle.

(Continued)

(Continued)

- When using mass storage USB devices with separate logical drives, only files saved to the root drive can be played.
- Files may not properly operate if application programs are installed to the USBs.
- The device may not operate normally if MP3 Players, cellular phones, digital cameras, or other electronic devices (USB devices not recognized as portable disk drives) are connected with the device.
- Charging through the USB may not work for some mobile devices.
- The device may not support normal operation when using a USB memory type besides (Metal Cover Type) USB Memory.
- The device may not support normal operation when using formats such as HDD Type, CF, or SD Memory.

(Continued)

(Continued)

- The device will not support files locked by DRM (Digital Rights Management.)
- USB memory sticks used by connecting an Adaptor (SD Type or CF Type) may not be properly recognized.
- The device may not operate properly when using USB HDDs or USBs subject to connection failures caused by vehicle vibrations. (e.g. i-stick type)
-  Please avoid using USB memory products which can be used as key chains or cellular phone accessories as they could cause damage to the USB jack.
- Connecting an MP3 device or phone through various channels, such as AUX/BT or Audio/USB mode may result in pop noises or abnormal operation.

Basic mode screen



<for RDS model>



1. Mode
   Displays currently operating mode
2. Operation State
   From Repeat/Random(Shuffle)/ Scan, displays the currently operating function
3. File Index
   Displays the current file number
4. File Info
   Displays information about the current file
5. Play/Pause
   Changes the play/pause state
6. Play Time
   Displays the current play time
7. Info
   Shows detailed information about the current file
8. Random(Shuffle)
   Turns the Random(Shuffle) feature on/off
9. Repeat
   Turns the Repeat feature on/off
10. Copy
    Copies the current file into My Music
11. List
    Moves to the list screen

Using USB mode

Playing/pausing USB files

Once a USB is connected, the mode will automatically start and begin playing a USB file.

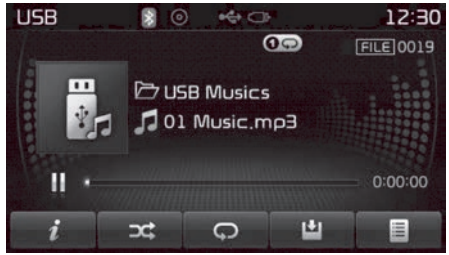

<for RDS model>

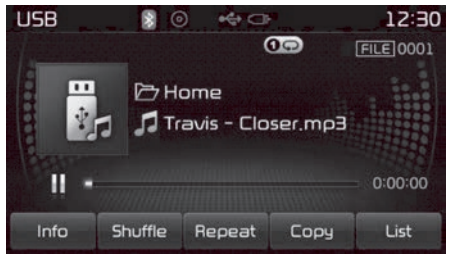

While playing, press the ⏸ button to pause and press ▶ button to play.

✻ NOTICE

- Loading may require additional time if there are many files and folders within the USB and result in faulty list display or file searching. Normal operations will resume once loading is complete.
- The device may not support normal operation when using a USB memory type besides (Metal Cover Type) USB Memory.

Changing files

Press the SEEK TRACK key to move to the previous or next file.

✻ NOTICE

- Pressing the SEEK TRACK key after the file has been playing for 2 seconds will start the current file from the beginning.
- Pressing the SEEK TRACK key before the file has been playing for 1 seconds will start the previous file.

Selecting from the List

Turn the knob left/right to search for the desired file.

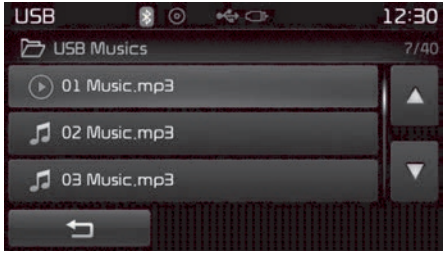

Once you find the desired file, press the knob to start playing.

Rewinding/Fast-forwarding files

While playing, press and hold the SEEK TRACK key (over 0.8 seconds) to rewind or fast-forward the current file.

Scan

Press the SCAN key to play the first 10 seconds of each file.
Press the SCAN key again to turn off.
Press and hold the TA/SCAN key to play the file 10 seconds of each file.
Pressing and holding the TA/SCAN key again to turn off.

Searching folders

Press the PTY FOLDER (FOLDER) key to select and search folders.



Once the desired folder is displayed, press the knob to select.
The first file within the selected folder will begin playing.

USB mode menu

Within this mode, you will have access to the Info, Random(Shuffle), Repeat, Copy and List features.

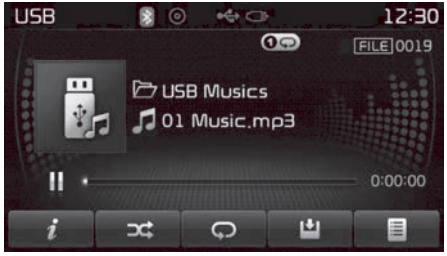

<for RDS model>

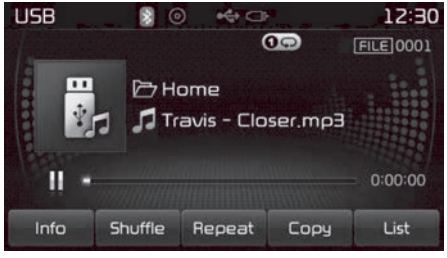

Info
Press the (Info) button to display details about the current file.

NOTICE

- When the 'Folder File' option is set as the default display within Display setup, the album/artist/file information are displayed as detailed file information.
- When the 'Album Artist Song' option is set as the default display, the folder name/file name are displayed as detailed file information.
- The title, artist and album info are displayed only when such information are recorded within the MP3 file ID3 tag.

Random (Shuffle)
Press the (Shuffle) button to play files in random(Shuffle) order.
Each time the button is pressed, the feature changes in order of Random (Shuffle) Folder ➟ Random (Shuffle) All ➟ Off.

- Random (Shuffle) Folder: Plays all files within the current folder in Random (Shuffle) order.
- Random (Shuffle) All: Plays all files in Random (Shuffle) order.

Repeat
Press the (Repeat) button to repeat the current file or folder.
Each time the button is pressed, the feature changes in order of Repeat ➟ Repeat Folder ➟ Off.

- Repeat (Icon): Repeats the current file.
- Repeat Folder (Icon): Repeats all files within the current folder.

Copying Files
Press the (Copy) button to copy the current file into My Music.

NOTICE

Selecting another feature during copying will display a pop-up asking whether you wish to cancel copying. To cancel, select 'Yes'.

List
Press the (List) button to display the track list screen.

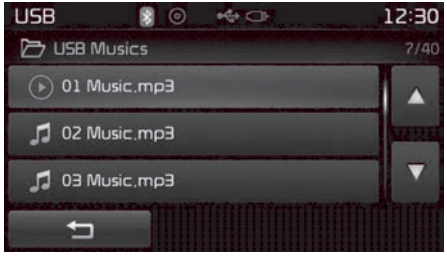

Turn the knob left/right to search for files. Once the desired file is displayed, press the knob to select and play.

iPod mode

✻ NOTICE

■ USING THE iPod® DEVICE

- iPod® is a registered trademark of Apple Inc.
- In order to use the iPod while operating the keys, you must use a dedicated iPod cable. (the cable that is supplied when purchasing iPod/iPhone products).

(Continued)

(Continued)

- If the iPod is connected to the vehicle while it is playing, a high pitch sound could occur for approximately 1-2 seconds immediately after connecting. If possible, connect the iPod to the vehicle with the iPod stopped/paused.
- During ACC ON state, connecting the iPod through the iPod cable will charge the iPod through the car audio system.
- When connecting with the iPod cable, make sure to fully insert the jack to prevent communication interference.
- When the EQ features of an external device, such as the iPod, and the audio system are both active, EQ effects could overlap and cause sound deterioration and distortion. Whenever possible, turn off the EQ feature within the external device upon use by connecting with the audio system.

(Continued)

(Continued)

- Noise may occur when an iPod or AUX device is connected. When such devices are not being used, disconnect the device for storage.
- When the iPod or AUX device power is connected to the power jack, playing the external device may result in noise. In such cases, disconnect the power connection before use.
- Skipping or improper operation may occur depending on the characteristics of your iPod/Phone device.
- If your iPhone is connected to both the Bluetooth® Wireless Technology and USB, the sound may not be properly played. In your iPhone, select the Dock connector or Bluetooth® Wireless Technology to change the sound output (source).

(Continued)

(Continued)

- iPod mode cannot be operated when the iPod cannot be recognized due to the playing of versions that do not support communication protocols, cases of iPod abnormalities and defects.
- For fifth generation iPod Nano devices, the iPod may not be recognized when the battery level is low. Please charge the iPod for use.
- Search/play orders shown within the iPod device may differ with the orders shown within the audio system.
- If the iPod malfunctions due to an iPod device defect, reset the iPod and try again. (To learn more, refer to your iPod manual)
- Some iPods may not sync with the System depending on its version. If the Media is removed before the Media is recognized, then the system may not properly restore the previously operated mode. (iPad charging is not supported.)

Basic mode screen



<for RDS model>

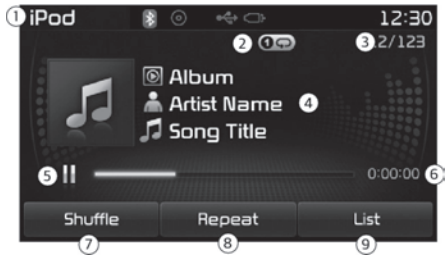

1. Mode
   Displays currently operating mode
2. Operation State
   From Repeat/Random(Shuffle) displays the currently operating function
3. Song Index
   Displays the current song/total number of songs
4. Song Info
   Displays information about the current song
5. Play/Pause
   Changes the play/pause state
6. Play Time
   Displays the current play time
7. Random(Shuffle)
   Turns the Random(Shuffle) feature on/off
8. Repeat
   Turns the Repeat feature on/off
9. List
   Moves to the list screen

Using iPod mode

Playing/pausing iPod songs

Once an iPod is connected, the mode will automatically start and begin playing an iPod song.

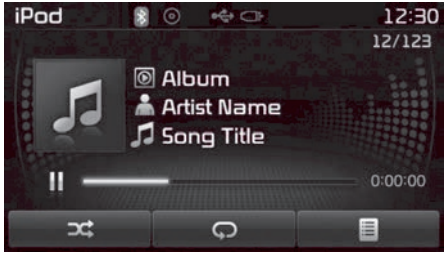

<for RDS model>

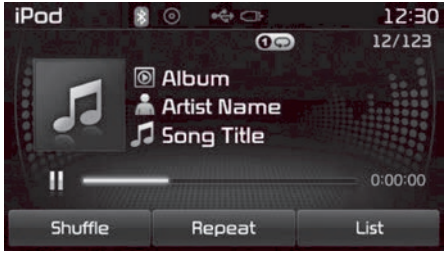

While playing, press the ⏸ button to pause and press ▶ button to play.

✻ NOTICE

iPods with unsupported communication protocols may not properly operate in the audio system.

Changing songs

Press the SEEK TRACK key to move to the previous or next song.

✻ NOTICE

- Pressing the SEEK TRACK key after the song has been playing for 2 seconds will start the current song from the beginning.
- Pressing the SEEK TRACK key before the song has been playing for 1 second will start the previous song.
- Slight time differences may exist depending your iPod product.

Rewinding/Fast-forwarding songs

While playing, press and hold the SEEK TRACK key (over 0.8 seconds) to rewind or fast-forward the current song.

Searching categories

Turn the knob left/right to search for the desired category.

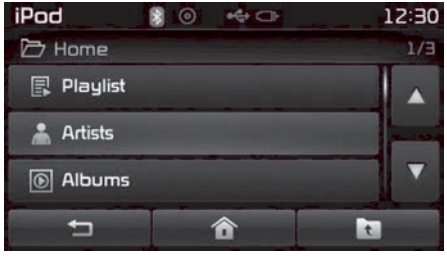

<for RDS model>

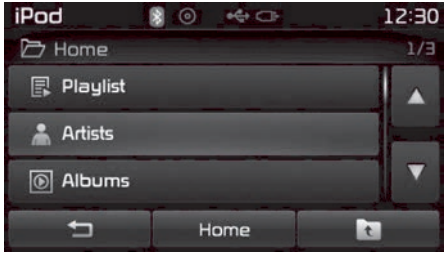

Once you find the desired category, press the knob to select and play.

✻ NOTICE

There are eight categories that can be searched, including Playlists, Artists, Albums, Genres, Songs, Composers, Audiobooks and Podcasts.

Category menu

Within the iPod Category menu, you will have access to the [Back], [Home] and [Up] features.

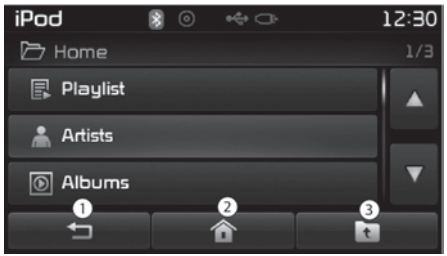

<for RDS model>

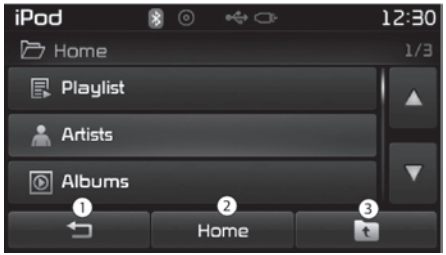

(1) [Back]: Displays the play screen

(2) [Home]: Moves to the iPod root category screen

(3) [Up]: Moves to the previous category

✻ NOTICE

- If the search mode is accessed while playing a song, the most recently searched category is displayed.
- Search steps upon initial connection may differ depending on the type of iPod device.

iPod mode menu

Within this mode, you will have access to the Random(Shuffle), Repeat and List features.

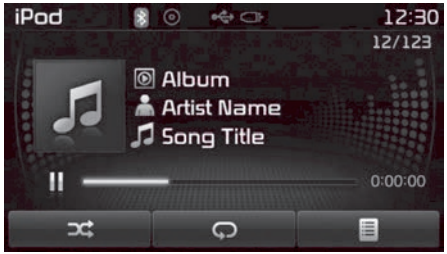

<for RDS model>



Random (Shuffle)

Press the [Shuffle] button to play files in random(Shuffle) order.

Each time the button is pressed, the feature changes in order of Random (Shuffle) Album ➟ Random (Shuffle) All ➟ Off.

- Random (Shuffle) Album: Shuffle Album plays album in Random(Shuffle) order.
- Random (Shuffle) All: Plays all files in Random (Shuffle) order.

Repeat

Press the (Repeat) button to repeat the current song. Press the button again to turn the repeat feature off.

- Repeat : Repeats the current song

List

Press the (List) button to display the Category Menu.

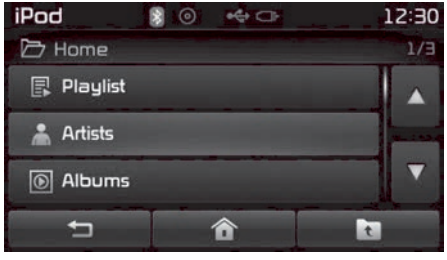

<for RDS model>

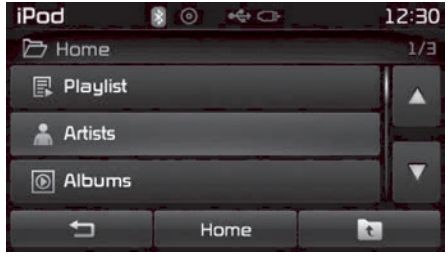

Turn the knob left/right to search for the desired category.
Once you find the desired category, press the knob to select and play.

AUX mode

Using AUX Mode

Press the MEDIA key ▶ Select [AUX]

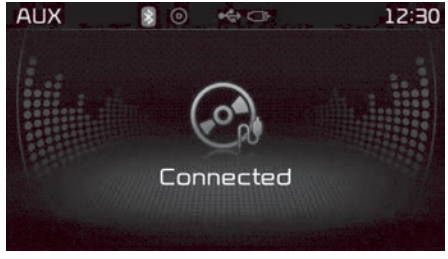

An external device can be connected to play music.

Connecting an external device

External audio players (Camcorders, car VCR, etc.) can be played through a dedicated cable.

✻ NOTICE

- If an external device connector is connected with the AUX terminal, then AUX mode will automatically operate. Once the connector is disconnected, the previous mode will be restored.
- AUX mode can be used only when an external audio player (camcorder, car VCR, etc.) has been connected.
- The AUX volume can be controlled separately from other audio modes.

(Continued)

(Continued)

- Connecting a connector jack to the AUX terminal without an external device will convert the system to AUX mode, but only output noise. When an external device is not being used, also remove the connector jack.
- When the external device power is connected to the power jack, playing the external device may output noise. In such cases, disconnect the power connection before use.
- Fully insert the AUX cable to the AUX jack upon use.

My Music mode

Basic mode screen

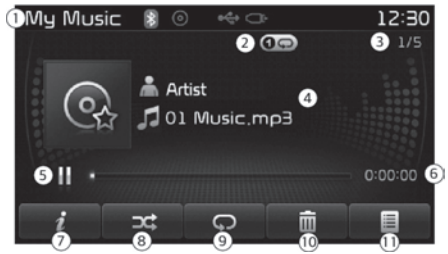

<for RDS model>

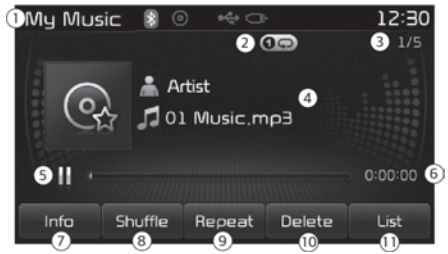

1. Mode
   Displays currently operating mode
2. Operation State
   From Repeat/Random(Shuffle)/ Scan, displays the currently operating function
3. File Index
   Displays the current file/total number of files
4. File Info
   Displays information about the current file
5. Play/Pause
   Changes the play/pause state
6. Play Time
   Displays the current play time
7. Info
   Shows detailed information about the current file
8. Random(Shuffle)
   Turns the Random(Shuffle) feature on/off
9. Repeat
   Turns the Repeat feature on/off
10. Delete
    Deletes the current file
11. List
    Moves to the list screen

Using My Music mode

Playing/pausing My Music files

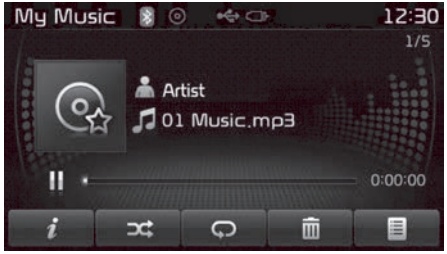

<for RDS model>

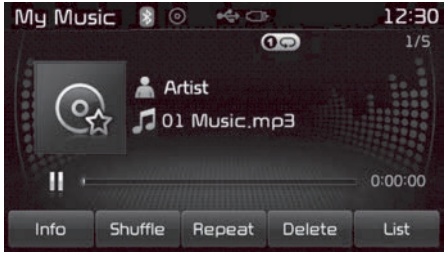

While playing, press the ⏸ button to pause and press ▶ button to play.

✻ NOTICE

If there are no files saved within My Music, the [My Music] button will be disabled.

Changing files

Press the SEEK TRACK key to move to the previous or next file.

✻ NOTICE

- Pressing the SEEK TRACK key after the file has been playing for 2 seconds will start the current file from the beginning.
- Pressing the SEEK TRACK key before the file has been playing for 1 second will start the previous file.

Selecting from the List

Turn the knob left/right to search for the desired file.

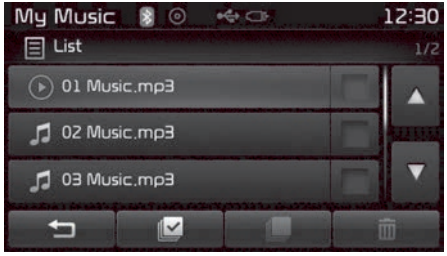

<for RDS model>

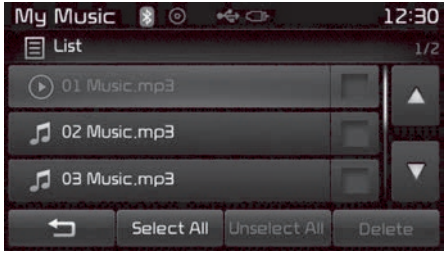

Once you find the desired file, press the knob to start playing.

Rewinding/Fast-forwarding files

While playing, press and hold the SEEK TRACK key (over 0.8 seconds) to rewind or fast-forward the current file.

Scan

Press the SCAN key to play the first 10 seconds of each file.

Press the SCAN key again to turn off. Press and hold the TA/SCAN key to play the file 10 seconds of each file. Pressing and holding the TA/SCAN key again to turn off.

My Music mode menu

Within this mode, you will have access to the Info, Random(Shuffle), Repeat and List features.

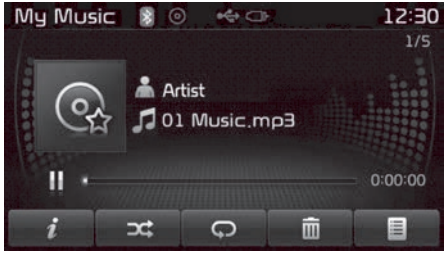

<for RDS model>

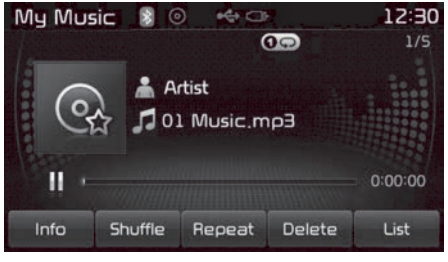

Info

Press the (Info) button to display details about the current file.

✻ NOTICE

The title, artist and album info are displayed only when such information is recorded within the MP3 file ID3 tag.

Random

Press the (Shuffle) button to play files in random order. Press the button again to turn the Random feature off.

Repeat

Press the (Repeat) button to repeat the current song. Press the button again to turn the repeat feature off.

Deleting Files

Press the (Delete) button to delete the current file.

List

Press the (List) button to display the file list screen.

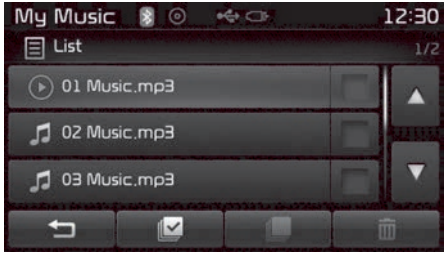

<for RDS model>

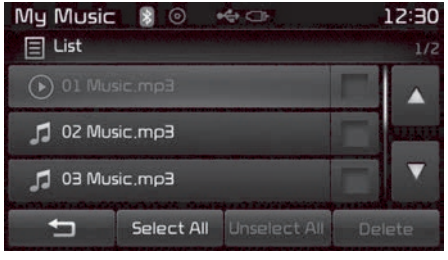

Turn the knob left/right to search for files. Once the desired file is displayed, press the knob to select and play.

List menu

From the List screen, it is possible to delete files you previously saved into My Music.

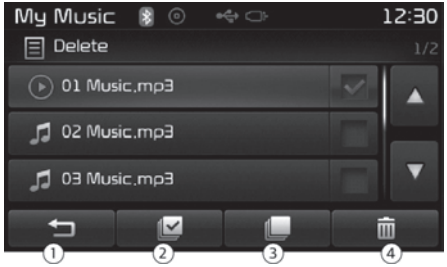

<for RDS model>

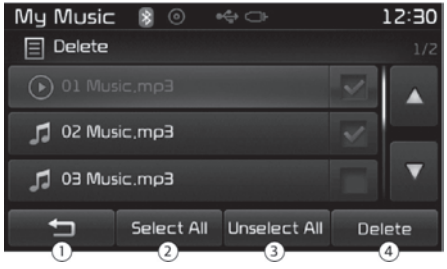

Press the (Select All) button or individually select the files you want to delete. Once files are selected, the (Unselect All) button and (Delete) buttons will be enabled.

: Moves to the previous screen

Select All: Selects all files

Unselect All: Deselects all selected files

Delete: Deletes selected files

After selecting the files you want to delete, press the (Delete) button to delete the selected files.

✻ NOTICE

- If there is memory available, up to 6,000 files can be saved.
- Identical files cannot be copied more than 1,000 times.
- To check memory information, go to SETUP ▶ [System] ▶ [Memory Information]

Bluetooth® Wireless Technology audio mode (for Bluetooth® Wireless Technology equipped model)

✻ NOTICE

■ USING THE Bluetooth® Wireless Technology Audio Mode

- Bluetooth® Wireless Technology Audio Mode can be used only when a Bluetooth® Wireless Technology phone has been connected.
- Bluetooth® Wireless Technology Audio Mode will not be available when connecting mobile phones that do not support this feature.
- While Bluetooth® Wireless Technology Audio is playing, if the Bluetooth® Wireless Technology phone is connected, then the music will also stop.

(Continued)

(Continued)

- Moving the Track up/down while playing Bluetooth® Wireless Technology audio mode may result in pop noises in some mobile phones.
- Bluetooth® Wireless Technology streaming audio may not be supported in some mobile phones.
- When returning to Bluetooth® Wireless Technology Audio mode after ending a call, the mode may not automatically restart in some mobile phones.
- Receiving an incoming call or making an outgoing call while playing Bluetooth® Wireless Technology Audio may result in audio interference.

Using Bluetooth® Wireless Technology Audio Mode

Playing/Pausing Bluetooth® Wireless Technology Audio

Once a Bluetooth® Wireless Technology device is connected, the mode will automatically start.



While playing, press the ▶II button to pause and press the ▶II button to play.

✻ NOTICE

The play/pause feature may operate differently depending on the mobile phone.

Changing Files

Press the SEEK TRACK key to move to the previous or next file.

Setting Connection

If a Bluetooth® Wireless Technology device has not been connected, press the SETUP key ▶ [Phone] button to display the Bluetooth® Wireless Technology connection screen.

It is possible to use the pair phone, connect/disconnect and delete features from your Bluetooth® Wireless Technology phone.

✻ NOTICE

- If the Bluetooth® Wireless Technology audio is not operating properly, check whether the feature is turned off at SETUP ▶ [Phone] ▶ [Audio streaming] (Streaming Audio). If the feature is off, turn back on and try again.
- If music is not yet playing from your mobile device after converting to Bluetooth® Wireless Technology Audio mode, pressing the play button once may start playing the mode. Check to see that music is playing from the Bluetooth® Wireless Technology device after converting to Bluetooth® Wireless Technology Audio Mode.

Bluetooth® Wireless Technology (for RDS, Bluetooth® Wireless Technology equipped model)

Using Bluetooth® Wireless Technology Handsfree

- Bluetooth® Wireless Technology refers to a short-distance wireless networking technology which uses a 2.45 GHz frequency to connect various devices within a certain distance.
- Supported within PCs, external devices, Bluetooth® Wireless Technology phones, PDAs, various electronic devices, and automotive environments, Bluetooth® Wireless Technology allows data to be transmitted at high speeds without having to use a connector cable.
- Bluetooth® Wireless Technology Handsfree refers to a device which allows the user to conveniently make phone calls with Bluetooth® Wireless Technology mobile phones through the audio system.

⚠ CAUTION

- **Bluetooth® Wireless Technology Handsfree is a feature that enables drivers to practice safe driving. Connecting the car audio system with a Bluetooth® Wireless Technology phone allows the user to conveniently make calls, receive calls, and manage the phone book. Before using the Bluetooth® Wireless Technology, carefully read the contents of this user's manual.**
- **Excessive use or operations while driving may lead to negligent driving practices and be the cause of accidents.**
- **Do not operate the device excessively while driving.**
- **Viewing the screen for prolonged periods of time is dangerous and may lead to accidents. When driving, view the screen only for short periods of time.**

✻ NOTICE

■ USING UPON CONNECTING Bluetooth® Wireless Technology PHONE

- Before connecting the car audio system with the mobile phone, check to see that the mobile phone supports Bluetooth® Wireless Technology features.
- Even if the phone supports Bluetooth® Wireless Technology, the phone will not be found during device searches if the phone has been set to hidden state or the Bluetooth® Wireless Technology power is turned off. Disable the hidden state or turn on the Bluetooth® Wireless Technology power prior to searching/connecting with the car audio system.
- If you do not want to automatically connect your Bluetooth® Wireless Technology phone, try the following.

(Continued)

(Continued)

1. Turn off the Bluetooth® Wireless Technology feature in your mobile phone.
   - For more information on Bluetooth® Wireless Technology features within your mobile, refer to your mobile phone user's manual.
2. Turn off the Bluetooth® Wireless Technology feature in your car audio system.
   - To turn off the Bluetooth® Wireless Technology feature in your car audio system, go to SETUP ▶ [Phone] and [turn off] the Bluetooth® Wireless Technology feature.

- Park the vehicle when connecting the car audio system with your mobile phone.
- Bluetooth® Wireless Technology connection may become intermittently disconnected in some mobile phones. Follow these steps to try again.
  1. Turn the Bluetooth® Wireless Technology function within the mobile phone off/on and try again.
  2. Turn the mobile phone power Off/On and try again.
  3. Completely remove the mobile phone battery, reboot, and then again.
  4. Reboot the audio system and try again.
  5. Delete all paired devices, pair and try again.
- The Handsfree call volume and quality may differ depending on the mobile phone.
- Bluetooth® Wireless Technology features supported within the vehicle are as follows. Some features may not be supported depending on your Bluetooth® Wireless Technology device.
  - Answering and placing Bluetooth® Wireless Technology Handsfree calls
  - Menu operation during call (Switch to Private, Switch to call waiting, Outgoing volume)
  - Download Call History
  - Download Mobile Phone book
  - Phone book/Call History Auto Download
  - Bluetooth® Wireless Technology device auto connection
  - Bluetooth® Wireless Technology Audio
- It is possible to pair up to five Bluetooth® Wireless Technology devices to the car system.
- Only one Bluetooth® Wireless Technology device can be connected at a time.

(Continued)

(Continued)

- Other devices cannot be paired while a Bluetooth® Wireless Technology device is already connected.
- When a Bluetooth® Wireless Technology device is being connected, the connection process cannot be canceled.
- Only Bluetooth® Wireless Technology Handsfree and Bluetooth® Wireless Technology audio related features will operate within this system.
- Normal operation is possible only for devices that support Handsfree or audio features, such as a Bluetooth® Wireless Technology mobile phone or a Bluetooth® Wireless Technology audio device.

(Continued)

(Continued)

- Only one function can be used at a time between the Bluetooth® Wireless Technology Handsfree and Bluetooth® Wireless Technology audio. (While playing Bluetooth® Wireless Technology audio, streaming will end upon entering the Bluetooth® Wireless Technology phone screen.)
- If a connected Bluetooth® Wireless Technology device becomes disconnected for various reasons, such as being out of range, turning the device OFF, or a Bluetooth® Wireless Technology communication error, Bluetooth® Wireless Technology devices are automatically searched and connected.
- Placing the audio system within an electromagnetic environment may result in noise interference.

Pairing a Bluetooth® Wireless Technology Device

What is Bluetooth® Wireless Technology Pairing?

Pairing refers to the process of synchronizing your Bluetooth® Wireless Technology phone or device with the car audio system for connection. Pairing is necessary to connect and use the Bluetooth® Wireless Technology feature.

Pairing PHONE / key on the steering remote controller

When no devices have been paired

1. Press the PHONE key or the key on the steering remote controller. The following screen is displayed.
2. Press the OK button to enter the Pair Phone screen.



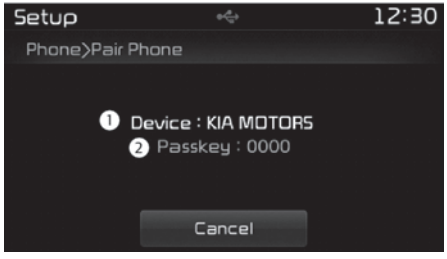

1. Device: Name of device as shown when searching from your Bluetooth® Wireless Technology device
2. Passkey: Passkey used to pair the device

3. From your Bluetooth® Wireless Technology device (i.e. Mobile Phone), search and select your car audio system.
4. After a few moments, a screen is displayed where the passkey is entered.
   Here, enter the passkey "0000" to pair your Bluetooth® Wireless Technology device with the car audio system.
5. Once pairing is complete, the following screen is displayed.

✻ NOTICE



(Continued)

(Continued)

- If Bluetooth® Wireless Technology devices are paired but none are currently connected, pressing the PHONE key or the key on the steering remote controller displays the following screen. Press the [Pair] button to pair a new device or press the [Connect] to connect a previously pair device.

Pairing through [PHONE] setup

Press the SETUP key ▶ Select [Phone] ▶ Select [Pair Phone] ▶ Select knob

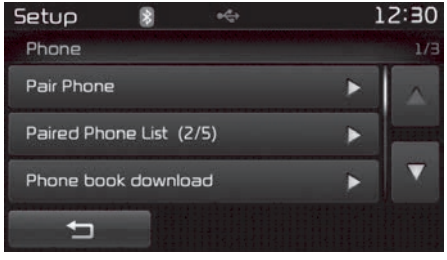

1. The following steps are the same as the steps described in "When no devices have been paired" on page 5-81.

✻ NOTICE

- The waiting period during phone pairing will last for one minute. The pairing process will fail if the device is not paired within the given time. If the pairing process fails, you must start the process from the beginning.
- Generally, most Bluetooth® Wireless Technology devices will automatically connect once pairing is complete. However, some devices may require a separate verification process to connect. Check to see whether Bluetooth® Wireless Technology has been properly connected within your mobile phone.
- List of paired Bluetooth® Wireless Technology devices can be viewed at SETUP ▶ [Phone] ▶ [Paired Phone List].

Connecting a device

Press the SETUP key ▶ Select [Phone] ▶ Select [Paired Phone List]

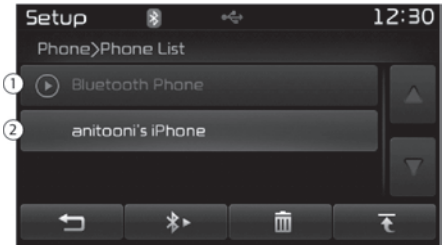

1. Connected Phone: Device that is currently connected
2. Paired Phone: Device that is paired but not connected

From the paired phone list, select the device you want to connect and press the button.



Changing priority

What is priority?

It is possible to pair up to five Bluetooth® Wireless Technology devices with the car audio system. As a result, the "Change Priority' feature is used to set the connection priority of paired phones. However, the most recently connected phone will always be set as the highest priority.

Press the SETUP key ▶ Select [Phone] ▶ Select [Paired Phone List]

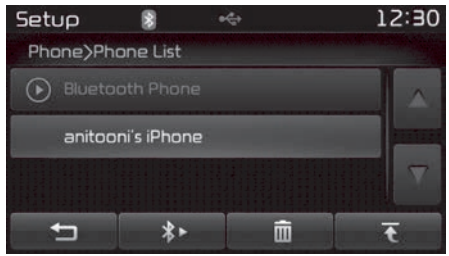

From the paired phone list, select the phone you want to change to the highest priority, then press the button from the Menu. The selected device will be changed to the highest priority.

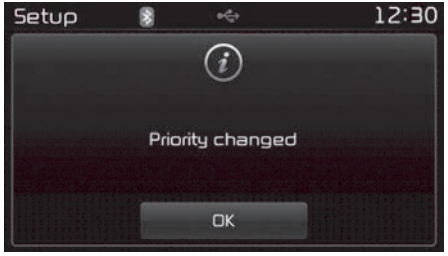

✻ NOTICE

When a device is currently connected, even if you change the priority to a different device, the currently connected phone will always be set as the highest priority.

Disconnecting a device

Press the SETUP key ▶ Select [Phone] ▶ Select [Paired Phone List]



From the paired phone list, select the currently connected device and press the button.

Deleting a device

Press the SETUP key ▶ Select [Phone] ▶ Select [Paired Phone List]



From the paired phone list, select the device you want to delete and press the button.

✻ NOTICE

- When deleting the currently connected device, the device will automatically be disconnected to proceed with the deleting process.
- If a paired Bluetooth® Wireless Technology device is deleted, the device's call history and phone book data will also be deleted.
- To re-use a deleted device, you must pair the device again.

Phone menu screen

Phone Menus

With a Bluetooth® Wireless Technology device connected, press the PHONE key to display the Phone menu screen.



1. Dial Number: Displays the dial screen where numbers can be dialed to make calls
2. Call History: Displays the call history list screen
3. Phone book: Displays the Phone book list screen
4. Setup: Displays Phone related settings

✻ NOTICE

- If you press the [Call History] button but there is no call history data, a prompt is displayed which asks whether to download call history data.
- If you press the [Phone book] button but there is no phone book data, a prompt is displayed which asks whether to download phone book data.
- This feature may not be supported in some mobile phones. For more information on download support, refer to your mobile phone user's manual.

Calling by dialing a number

Press the PHONE key ▶ Select [Dial Number]



1. Dial Pad: Used to enter phone number
2. Call: If a number has been entered, calls the number If no number has been entered, switches to call history screen
3. End: Deletes the entered phone number
4. Delete: Deletes entered numbers one digit at a time

Answering calls

Answering a Call

Answering a call with a Bluetooth® Wireless Technology device connected will display the following screen.

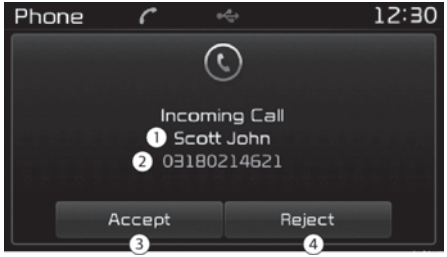

1. Caller: Displays the other party's name when the incoming caller is saved within your phone book
2. Incoming Number: Displays the incoming number
3. Accept: Accept the incoming call
4. Reject: Reject the incoming call

✻ NOTICE

- When the incoming call pop-up is displayed, most Audio and SETUP mode features will not operate. Only the call volume can be operated.

(Continued)

(Continued)

- The telephone number may not be properly displayed in some mobile phones.
- When a call is answered with the mobile phone, the call mode will automatically convert to Private mode.

During a Handsfree Call



1. Caller: Displays the other party's name if the incoming caller is saved within your phone book
2. Incoming Number: Displays the incoming number
3. Call time: Displays the call time
4. End: Ends call
5. Private: Converts to Private mode
6. Out Vol.: Sets call volume as heard by the other party
7. Mute: Turns Mic Mute On/Off

✻ NOTICE

If the mic is muted, the other party will not be able to hear your voice.

Call history

Press the PHONE key ▶ Select [Call History]



A list of incoming, outgoing and missed calls is displayed.
Press the [Download] button to download the call history.

1. Call history:

- Displays recent calls (call history)
- Connects call upon selection

2. Download: Download recent call history

✻ NOTICE

- The call history list will display up to 30 outgoing, incoming, and missed calls.
- Upon downloading call histories, previously saved histories are deleted.
- Incoming calls with hidden caller IDs will not be saved in the call history list.
- Previously saved phone book entries are stored even if a device is disconnected and re-connected.
- The download feature may not be supported in some mobile phones. Check to see that the Bluetooth® Wireless Technology device supports the download feature.

Phone book

Press the PHONE key ▶ Select [Phone book]



The list of saved phone book entries is displayed. Press the [Download] button to download the call history.

1. Contact List:
   - Displays downloaded phone book entries
   - Connects call upon selection
2. Download: Download phone book entries

✻ NOTICE

- Up to 1,000 phone book entries can be copied into car phone book.
- Upon downloading phone book data, previously saved phone book data will be deleted.
- Downloading is not possible if the phone book download feature is turned off within the Bluetooth® Wireless Technology device. Also, some devices may require device authorization upon attempting to download. If downloading cannot be normally conducted, check the Bluetooth® Wireless Technology device setting or the screen state.
- Caller ID information will not be displayed for unsaved callers.
- The download feature may not be supported in some mobile phones. Check to see that the Bluetooth® Wireless Technology device supports the download feature.

Bluetooth® Wireless Technology (for Bluetooth® Wireless Technology equipped model)

Pairing a Bluetooth® Wireless Technology Device

What is Bluetooth® Wireless Technology Pairing?

Pairing refers to the process of synchronizing your Bluetooth® Wireless Technology phone or device with the car audio system for connection. Pairing is necessary to connect and use the Bluetooth® Wireless Technology feature.

Pairing PHONE/ key on the steering remote controller

When no devices have been paired

1. Press the PHONE key or the key on the steering remote controller. The following screen is displayed.
2. Press the OK button to enter the Pair Phone screen.

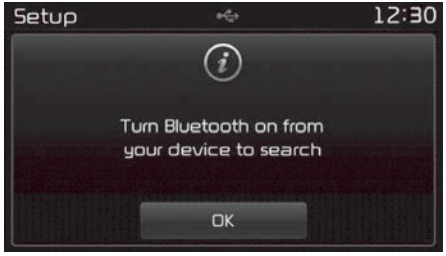

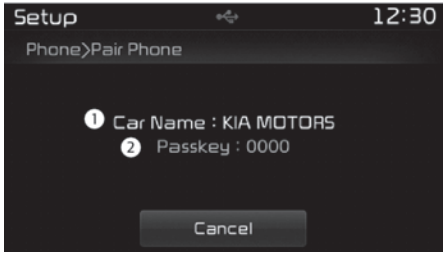

1. Car Name: Name of device as shown when searching from your Bluetooth® Wireless Technology device
2. Passkey: Passkey used to pair the device

3. From your Bluetooth® Wireless Technology device (i.e. Mobile Phone), search and select your car audio system.
4. After a few moments, a screen is displayed where the passkey is entered.
   Here, enter the passkey "0000" to pair your Bluetooth® Wireless Technology device with the car audio system.
5. Once pairing is complete, the following screen is displayed.

✻ NOTICE



(Continued)

(Continued)

- If Bluetooth® Wireless Technology devices are paired but none are currently connected, pressing the PHONE key or the key on the steering remote controller displays the following screen. Press the [Pair] button to pair a new device or press the [Connect] to connect a previously pair device.

Pairing through [PHONE] setup

Press the SETUP key ▶ Select [Phone] ▶ Select [Pair Phone] ▶ Select knob

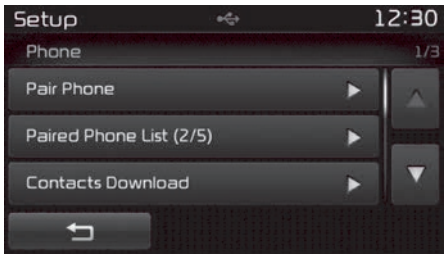

The following steps are the same as the steps described in "When no devices have been paired" on page 5-88.

✻ NOTICE

- The waiting period during phone pairing will last for one minute. The pairing process will fail if the device is not paired within the given time. If the pairing process fails, you must start the process from the beginning.
- Generally, most Bluetooth® Wireless Technology devices will automatically connect once pairing is complete. However, some devices may require a separate verification process to connect. Check to see whether Bluetooth® Wireless Technology has been properly connected within your mobile phone.
- List of paired Bluetooth® Wireless Technology devices can be viewed at SETUP ▶ [Phone] ▶ [Paired Phone List].

Connecting a device

Press the SETUP key ▶ Select [Phone] ▶ Select [Paired Phone List]



1. Connected Phone: Device that is currently connected
2. Paired Phone: Device that is paired but not connected

From the paired phone list, select the device you want to connect and press the Connect button.



Changing priority

What is priority?

It is possible to pair up to five Bluetooth® Wireless Technology devices with the car audio system. As a result, the "Change Priority' feature is used to set the connection priority of paired phones. However, the most recently connected phone will always be set as the highest priority.
Press the SETUP key ▶ Select [Phone] ▶ Select [Paired Phone List]



From the paired phone list, select the phone you want to change to the highest priority, then press the Change priority button from the Menu. The selected device will be changed to the highest priority.

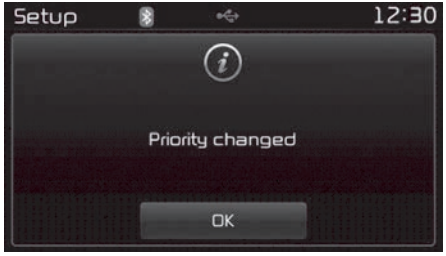

✻ NOTICE

When a device is currently connected, even if you change the priority to a different device, the currently connected phone will always be set as the highest priority.

Disconnecting a device

Press the SETUP key ▶ Select [Phone] ▶ Select [Paired Phone List]



From the paired phone list, select the currently connected device and press the Disconnect button.

Deleting a device

Press the SETUP key ▶ Select [Phone] ▶ Select [Paired Phone List]

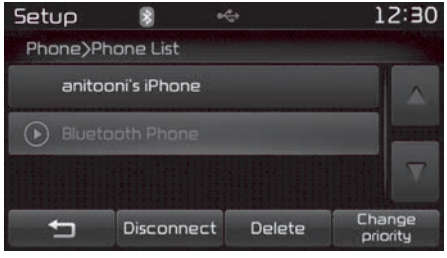

From the paired phone list, select the device you want to delete and press the Delete button.

✻ NOTICE

- When deleting the currently connected device, the device will automatically be disconnected to proceed with the deleting process.
- If a paired Bluetooth® Wireless Technology device is deleted, the device's call history and contacts data will also be deleted.
- To re-use a deleted device, you must pair the device again.

Phone menu screen

Phone Menus

With a Bluetooth® Wireless Technology device connected, press the PHONE key to display the Phone menu screen.



1. Dial Number: Displays the dial screen where numbers can be dialed to make calls
2. Call History: Displays the call history list screen
3. Contacts: Displays the Phone book list screen
4. Setup: Displays Phone related settings

✻ NOTICE

- If you press the [Call History] button but there is no call history data, a prompt is displayed which asks whether to download call history data.
- If you press the [Contacts] button but there is no contacts data, a prompt is displayed which asks whether to download contacts data.
- This feature may not be supported in some mobile phones. For more information on download support, refer to your mobile phone user's manual.

Calling by dialing a number

Press the PHONE key ▶ Select [Dial Number]



1. Dial Pad: Used to enter phone number
2. Call: If a number has been entered, calls the number If no number has been entered, switches to call history screen
3. End: Deletes the entered phone number
4. Delete: Deletes entered numbers one digit at a time

Answering calls

Answering a Call

Answering a call with a Bluetooth® Wireless Technology device connected will display the following screen.



1. Caller: Displays the other party's name when the incoming caller is saved within your contacts
2. Incoming Number: Displays the incoming number
3. Accept: Accept the incoming call
4. Reject: Reject the incoming call

✻ NOTICE

- When the incoming call pop-up is displayed, most Audio and SETUP mode features will not operate. Only the call volume can be operated.

(Continued)

(Continued)

- The telephone number may not be properly displayed in some mobile phones.
- When a call is answered with the mobile phone, the call mode will automatically convert to Private mode.

During a Handsfree Call



1. Caller: Displays the other party's name if the incoming caller is saved within your contacts
2. Incoming Number: Displays the incoming number
3. Call time: Displays the call time
4. End: Ends call

5. Private: Converts to Private mode
6. Out Vol.: Sets call volume as heard by the other party
7. Mute: Turns Mic Mute On/Off

✻ NOTICE

If the mic is muted, the other party will not be able to hear your voice.

Call history

Press the PHONE key Select [Call History]



A list of incoming, outgoing and missed calls is displayed.
Press the Download button to download the call history.

1. Call history:
   - Displays recent calls (call history)
   - Connects call upon selection
2. Download: Download recent call history

Contacts

Press the PHONE key ▶ Select [Phone book]

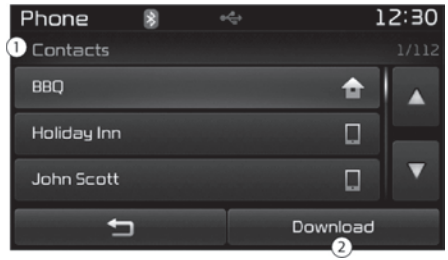

The list of saved phone book entries is displayed. Press the Download button to download the call history.

1. Contact List:
   - Displays downloaded contacts entries
   - Connects call upon selection
2. Download: Download contacts entries

✻ NOTICE

- Up to 1,000 contacts entries can be copied into car contacts.
- Upon downloading contacts data, previously saved contacts data will be deleted.
- Downloading is not possible if the contacts download feature is turned off within the Bluetooth® Wireless Technology device. Also, some devices may require device authorization upon attempting to download. If downloading cannot be normally conducted, check the Bluetooth® Wireless Technology device setting or the screen state.
- Caller ID information will not be displayed for unsaved callers.
- The download feature may not be supported in some mobile phones. Check to see that the Bluetooth® Wireless Technology device supports the download feature.

Voice recognition

✻ NOTICE

■ USING THE Voice Recognition

- When using the voice recognition feature, only commands listed within the user's manual are supported.
- Be aware that during the operation of the voice recognition system, pressing any key other than the key or touching the screen will terminate voice recognition mode.
- For superior voice recognition performance, position the microphone used for voice recognition above the head of the driver's seat and maintain a proper position when saying commands.
- Within the following situations, voice recognition may not function properly due to external sound.

(Continued)

(Continued)

- When the windows and sunroof are open
- When the wind of the cooling / heating device is strong
- When entering and passing through tunnels
- When driving on rugged and uneven roads
- During severe rain (heavy rains, windstorms)

- Phone related voice commands can be used only when a Bluetooth® Wireless Technology device is connected.
- When making calls by stating a name, the corresponding contact must be downloaded and stored within the audio system.

(Continued)

(Continued)

- After downloading the Bluetooth® Wireless Technology phone book, it takes some times to convert the phone book data into voice information. During this time, voice recognition may not properly operate.
- Pronounce the voice commands naturally and clearly as if in a normal conversation.

Using voice recognition

Starting Voice Recognition

Shortly press the key on the steering remote controller. Say a command.

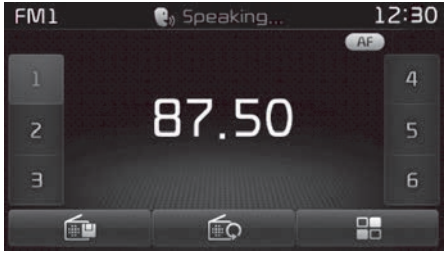



- If voice recognition is in [Normal Mode], then the system will say "Please say a command. Beep~"
- If voice recognition is in [Expert Mode], then the system will only say a "Beep~"
- To change the Normal Mode/Expert Mode setting, go to SETUP ▶ [System] ▶ [Prompt Feedback].

✻ NOTICE

For proper recognition, say the command after the voice instruction and beep tone.

Skipping Prompt Messages

While prompt message is being stated ▶ Shortly press the key on the steering remote controller (under 0.8 seconds)
The prompt message is immediately ended and the beep tone will sound.
After the "beep", say the voice command.

Re-starting Voice Recognition

While system waits for a command ▶ Shortly press the key on the steering remote controller (under 0.8 seconds)
The command wait state is immediately ended and the beep ton will sound.
After the "beep", say the voice command.

Ending voice recognition

While Voice Recognition is operating ▶ Press and hold the key on the steering remote controller (over 0.8 seconds)

✻ NOTICE

- While using voice command, pressing a steering wheel remote control or a different key will end voice command.
- In a state where the system is waiting for a voice command, say "cancel" or "end" to end voice command.
- In a state where the system is waiting for a voice command, press and hold the key on the steering remote controller to end voice command.

Illustration on using voice commands

Starting voice command.

Shortly pressing the key (under 0.8 seconds):

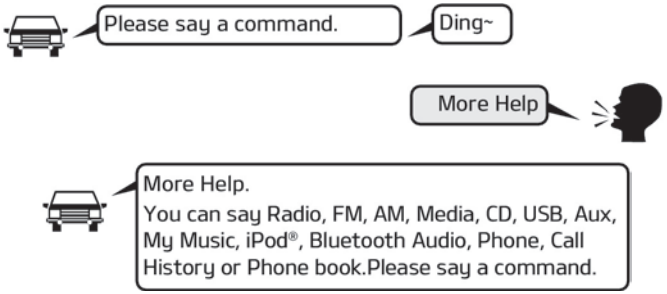

Skipping Voice Recognition



Shortly pressing the key (under 0.8 seconds):

Shortly pressing the key (under 0.8 seconds):

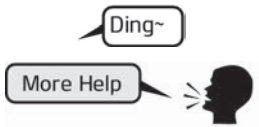

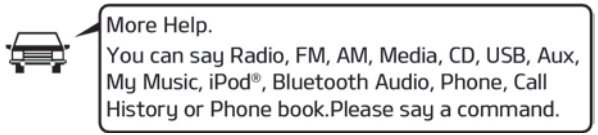

End voice command

Shortly pressing the key (under 0.8 seconds):

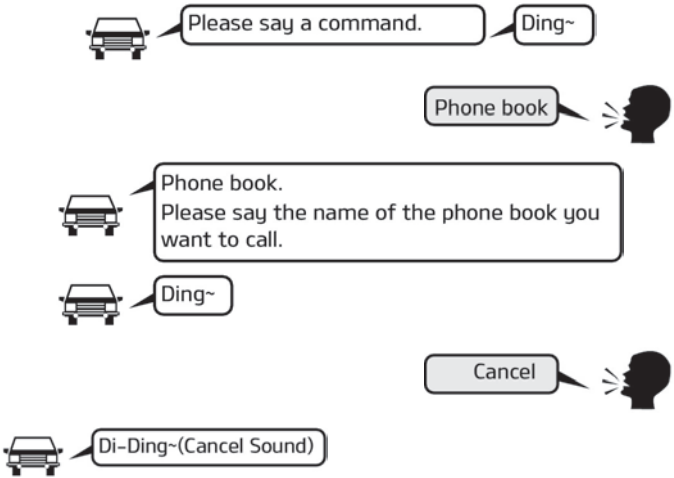

Voice command list

• Common Commands: These are commands that can be used in all situations. (However, some commands may not be supported in special circumstances.)

Command	Function
More Help	Provides guidance on commands that can be used anywhere in the system.
Help	Provides guidance on commands that can be used within the current mode.
Call<Name>	Calls <Name> saved in phone book Ex) Call "John"
Phone	Provides guidance on Phone related commands. After saying this command, say "Call History", "Phone book", "Dial Number" to execute corresponding functions.
Call History	Displays the Call History screen.
Phone book	Displays the phone book screen. After saying this command, say the name of a phone book saved in the phone book to automatically connect the call.
Dial Number	Display the Dial number screen. After saying this command, you can say the number what you want to call.
Redial	Connects the most recently called number.
Radio	- When listening to the radio, displays the next radio screen. (FM1➟FM2➟FMA➟AM➟AMA) - When listening to a different mode, displays the most recently played radio screen.
FM	- When currently listening to the FM radio, maintains the current state. - When listening to a different mode, displays the most recently played FM screen.
FM1(FM One)	Displays the FM1 screen.
FM2(FM Two)	Displays the FM2 screen.
FMA	Displays the FMA screen.
AM	Displays the AM screen.
AMA	Displays the AMA screen.
FM Preset 1~6	Plays the most recently played broadcast saved in FM Preset 1~6.
AM Preset 1~6	Plays the broadcast saved in AM Preset 1~6.
FM 87.5~107.9	Plays the FM broadcast of the corresponding frequency.
AM 530~1710	Plays the AM broadcast of the corresponding frequency.
TA on	Enable Traffic Announcement

Command	Function
TA off	Disable Traffic Announcement
News on	Enable RDS News feature
News off	Disable RDS News feature
Media	Moves to the most recently played media screen.
Play Track 1~30	If a music CD has been inserted, plays the corresponding track.
CD	Plays the music saved in the CD.
Search CD	Moves to the CD track or file selection screen. - For audio CDs, move to the screen and say the track number to play the corresponding track. - Moves to MP3 CD file selection screen. After manually operate the device to select and play music.
USB	Plays USB music.
Search USB	Moves to USB file selection screen. After manually operate the device to select and play music.
iPod	Plays iPod music.
Search iPod	Moves to the iPod file selection screen. After, manually operate the device to select and play music.
My Music	Plays the music saved in My Music.
Search My Music	Moves to My Music file selection screen. After manually operate the device to select and play music.
AUX (Auxiliary)	Plays the connected external device.
Bluetooth Audio	Plays the music saved in connected Bluetooth® Wireless Technology device.
Mute	Mutes the radio or music volume.
Pardon?	Repeats the most recent comment.
Cancel (Exit)	Ends voice command.

• FM/AM radio commands: Commands that can be used while listening to FM, AM radio.

Command	Function
Preset 1~6	Plays the broadcast saved in Preset 1~6.
Auto Store	Automatically selects radio broadcast frequencies with superior reception and saves in Presets 1~6.
Preset Save 1~6	Saves the current broadcast frequency to Preset 1~6.
Seek up	Plays the next receivable broadcast.
Seek down	Plays the previous receivable broadcast.

Command	Function
Next Preset	Selects the preset number next to the most recently selected preset. (Example: When currently listening to preset no. 3, then preset no. 4 will be selected.)
Previous Preset	Selects the preset number previous to the most recently selected preset. (Example: When currently listening to preset no. 3, then preset no. 2 will be selected.)
Scan	Scans receivable frequencies from the current broadcast and plays for 10 seconds each.
Preset Scan	Moves to the next preset from the current present and plays for 10 seconds each.
AF on	Enable Alternative Frequency feature
AF off	Disable Alternative Frequency feature
Region	Enable Region feature
Region off	Disable Region feature

• Audio CD commands: Commands that can be used while listening to Audio CD.

Command	Function
Program Type	Moves to the RDS Program type selection screen. After, manually operate the device to select a desired program type.
Random	Randomly plays the tracks within the CD.
Random Off	Cancels random play to play tracks in sequential order.
Repeat	Repeats the current track.
Repeat Off	Cancels repeat play to play tracks in sequential order.
Next Track	Plays the next track.
Previous Track	Plays the previous track.
Scan	Scans the tracks from the next track for 10 seconds each.
Track 1~30	Plays the desired track number.
Search Track	Moves to the track selection screen. After, say the track name to play the corresponding track.
Information	Displays the information screen of the current track.

• MP3 CD / USB commands: Commands that can be used while listening to music files saved in CD and USB.

Command	Function
Random	Randomly plays the files within the current folder.
All Random	Randomly plays all saved files.

Command	Function
Random Off	Cancels random play to play files in sequential order.
Repeat	Repeats the current file.
Folder Repeat	Repeats all files in the current folder.
Repeat Off	Cancels repeat play to play files in sequential order.
Next File	Plays the next file.
Previous File	Plays the previous file.
Scan	Scans the files from the next files for 10 seconds each.
Search File	Moves to the file selection screen.
Search Folder	Moves to the folder selection screen.
Information	Displays the information screen of the current file.
Copy	Copies the current file into My Music.

- iPod Commands: Commands that can be used while playing iPod.

Command	Function
All Random	Randomly plays all saved songs.
Random	Randomly plays the songs within the current category.
Random Off	Cancels random play to play songs in sequential order.
Repeat	Repeats the current song.
Repeat Off	Cancels repeat play to play songs in sequential order.
Next Song	Plays the next song.
Previous Song	Plays the previous song.
Search Song	Moves to the song selection screen.
Information	Displays the information screen of the current song.

- My Music Commands: Commands that can be used while playing My Music.

Command	Function
Random	Randomly plays all saved files.
Random Off	Cancels random play to play files in sequential order.
Repeat	Repeats the current file.
Repeat Off	Cancels repeat play to play files in sequential order.
Next File	Plays the next file.
Previous File	Plays the previous file.
Scan	Scans the files from the next files for 10 seconds each.
Search File	Moves to the file selection screen.

Command	Function
Information	Displays the information screen of the current file.
Delete	Deletes the current file. You will bypass an additional confirmation process.
Delete All	Deletes all files saved in My Music. You will bypass an additional confirmation process.

Setup mode (for RDS model)

AM111A4EE

Starting mode

Press the SETUP key to display the Setup screen.



You can select and control options related to [Display], [Sound], [Clock/Day], [Phone] and [System].

Display settings

Adjusting the Brightness

Press the SETUP key ▶ Select [Display] ▶ Select [Brightness]



Use the ◀,▶ buttons to adjust the screen brightness or set the Brightness on Automatic, Day, or Night mode.
Press the Default button to reset.

1. Automatic: Adjusts the brightness automatically
2. Daylight: Always maintains the brightness on high
3. Night: Always maintains the brightness on low

Pop-up Mode

Press the SETUP key ▶ Select [Display] ▶ Select [Pop-up Mode]

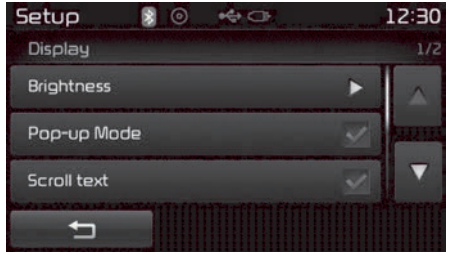

This feature is used to display the Pop-up Mode screen when entering radio and media modes.

- Bluetooth® Wireless Technology Audio Commands: Commands that can be used while playing Phone Music.

Command	Function
Play	Plays the currently paused song.
Pause	Pauses the current song.

When this feature is turned on, pressing the RADIO or MEDIA key will display the Pop-up Mode screen.

✻ NOTICE

The media Pop-up Mode screen can be displayed only when two or more media modes have been connected.

Scroll Text

Press the SETUP key ▶ Select [Display] ▶ Select [Scroll text]

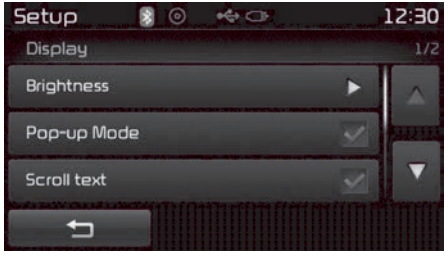

This feature is used to scroll text displayed on the screen when it is too long to be displayed at once.
When turned on, the text is repeatedly scrolled. When turned off, the text is scrolled just once.

MP3 Information Display

Press the SETUP key ▶ Select [Display] ▶ Select [Song Info]

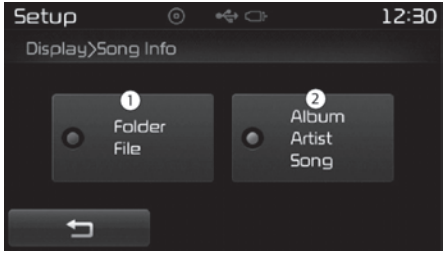

This feature is used to change the information displayed within USB and MP3 CD modes.

1. Folder File: Displays file name and folder name
2. Album Artist Song: Displays album name/artist name/song

Sound settings

Sound Settings

Press the SETUP key ▶ Select [Sound] ▶ Select [Audio Setting]



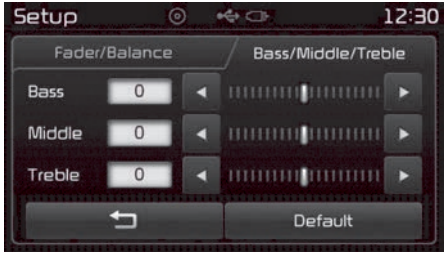

Use the ◀, ▶, ▲, ▼ buttons to adjust the Fader/Balance settings.
Use the ◀, ▶ buttons to adjust the Bass/Middle/Treble settings.
Press the Default button to reset.

SDVC (Speed Dependent Volume Control)

Press the SETUP key ▶ Select [Sound] ▶ Select [Speed Dependent Vol.]



The volume level is controlled automatically according to the vehicle speed. SDVC can be set by selecting from Off/Low/Mid/High.

Voice Recognition Setting

Press the SETUP key ▶ Select [Sound] ▶ Select [Volume Dialogue]



Use the -, + buttons to adjust the Volume Dialog.

Touch Screen Beep

Press the SETUP key ▶ Select [Sound] ▶ Select [Touch Screen Beep]

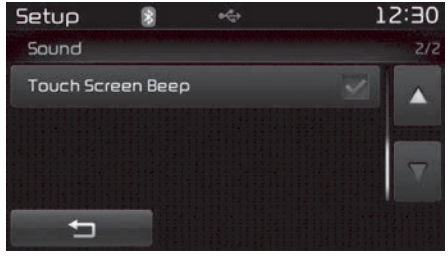

This feature is used to turn the touch screen beep on/off.

Clock/Day setting

Clock Setting

Press the SETUP key ▶ Select [Clock/Day] ▶ Select [Clock Settings]
Use the ▲,▼ buttons to set the Hour, Minutes and AM/PM setting.



✻ NOTICE

Press and hold the CLOCK key (over 0.8 seconds) to display the Clock/Day screen.

Calendar Setting

Press the SETUP key ▶ Select [Clock/Day] ▶ Select [Day Settings]



Use the ▲,▼ buttons to set the Day, Month and Year setting.

Time Format

Press the SETUP key ▶ Select [Clock/Day] ▶ Select [Time Format]

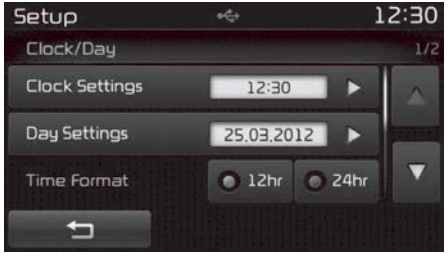

This feature is used to change the clock format between 12hr or 24hr.

Clock Display

Press the SETUP key ▶ Select [Clock/Day] ▶ Select [Clock Display(Power off)]

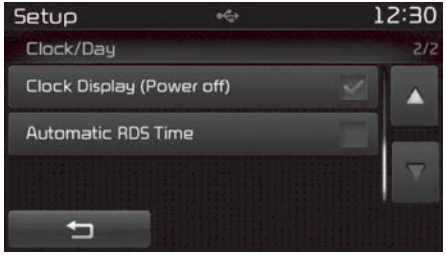

This feature is used to display a clock on the screen when the audio system is turned off.

Automatic RDS Time

Press the SETUP key ▶ Select [Clock/Day] ▶ Select [Automatic RDS Time]

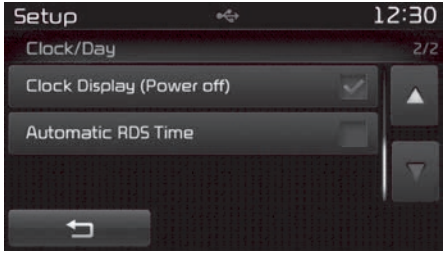

This feature is used to set time automatically by synchronizing with RDS.

Bluetooth® Wireless Technology Setting

Pairing a new device

Press the SETUP key ▶ Select [Phone] ▶ Select [Pair Phone]

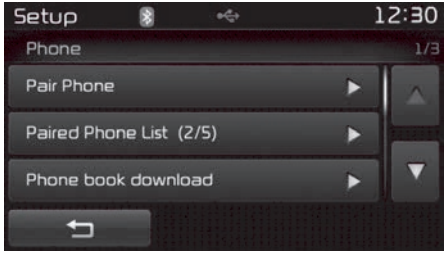

Bluetooth® Wireless Technology devices can be paired with the audio system. For more information, refer to the "Pairing through phone setup" on page 5-82.

Viewing paired phone list

Press the SETUP key ▶ Select [Phone] ▶ Select [Paired Phone List]



This feature is used to view mobile phones that have been paired with the audio system. Upon selecting a paired phone, the setup menu is displayed.
For more information, refer "Setting Bluetooth® Wireless Technology connection" on page 5-83.

1. : Moves to the previous screen
2. Connect/Disconnect Phone: Connect/disconnects currently selected phone
3. Delete: Deletes the currently selected phone
4. Change Priority: Sets currently selected phone to highest connection priority

✻ NOTICE

■ BEFORE DOWNLOADING PHONE BOOKS

- Only phone books within connected phones can be downloaded. Also check to see that your mobile phone supports the download feature.
- To learn more about whether your mobile phone supports phone book downloads, refer to your mobile phone user's manual.
- The Phone book for only the connected phone can be downloaded. Before downloading, check to see whether your phone supports the download feature.

Downloading Phone books

Press the SETUP key ▶ Select [Phone] ▶ Select [Phone Book Download]



The Phone book is downloaded from the mobile phone and the download progress is displayed.

✻ NOTICE

- Up to 1,000 phone book entries can be copied into car phone book.
- Up to 1,000 phone book entries can be saved for each paired device.
- Upon downloading phone book data, previously saved phone book data will be deleted. However, Phone book entries saved to other paired phones are not deleted.

Auto Download (Phone Book)

Press the SETUP key ▶ Select [Phone] ▶ Select [Auto Download]

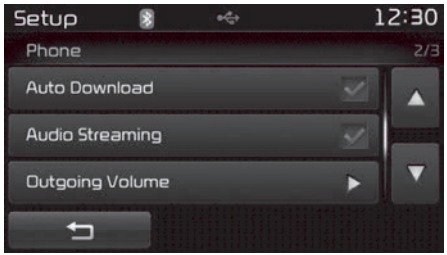

This feature is used to automatically download mobile phone book entries once a Bluetooth® Wireless Technology phone is connected.

✻ NOTICE

- The Auto Download feature will download mobile phone book entries every time the phone is connected. The download time may differ depending on the number of saved phone book entries and the communication state.

(Continued)

(Continued)

- When downloading a phone book, first check to see that your mobile phone supports the phone book download feature.

Audio Streaming

Press the SETUP key ▶ Select [Phone] ▶ Select [Audio Streaming]

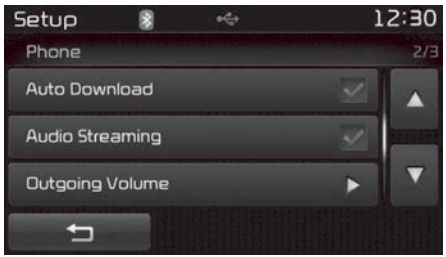

When Audio Streaming is turned on, you can play music files saved in your Bluetooth® Wireless Technology device from the car.

Outgoing Volume

Press the SETUP key ▶ Select [Phone] ▶ Select [Outgoing Volume]

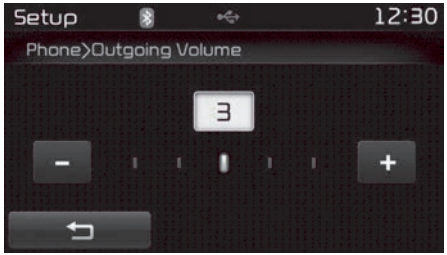

Use the -, + buttons to adjust the outgoing volume level.

Turning Bluetooth System Off

Press the SETUP key ▶ Select [Phone] ▶ Select [Bluetooth System Off]

Once Bluetooth® Wireless Technology is turned off, Bluetooth® Wireless Technology related features will not be supported within the audio system.

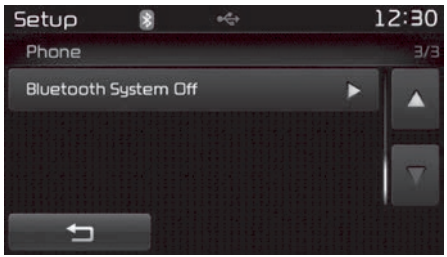



✻ NOTICE

To turn Bluetooth® Wireless Technology back on, go to SETUP ▶ [Phone] and press [Yes].

⚠ CAUTION

Bluetooth® Wireless Technology audio streaming may not be supported in some Bluetooth® Wireless Technology phones.

System setting

Memory Information

Press the SETUP key ▶ Select [System] ▶ Select [Memory Information]

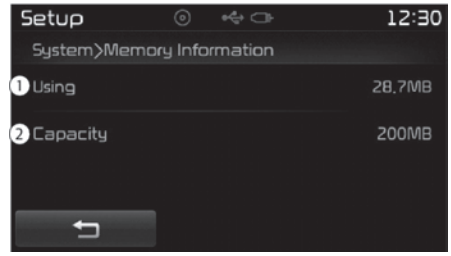

This feature displays information related to system memory.

1. Using: Displays capacity currently in use
2. Capacity: Displays total capacity

Voice Recognition Mode Setting (if equipped)

Press the SETUP key ▶ Select [System] ▶ Select [Voice Recognition System]

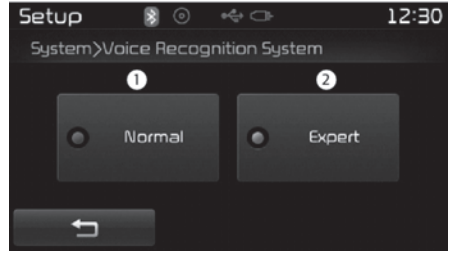

This feature is used to select the desired prompt feedback option from Normal and Expert.

1. Normal: When using voice recognition, provides detailed guidance prompts
2. Expert: When using voice recognition, omits some guidance prompts

✻ NOTICE

Voice Recognition is depend on the Audio System.

Language

Press the SETUP key ▶ Select [System] ▶ Select [Language]



This feature is used to change the system and voice recognition language.

If the language is changed, the system will restart and apply the selected language.

❈ Language support by region
Deutsch, English(UK), Français, Italiano, Español, Nederlands, Svenska, Dansk, Русский, Polski

Setup mode

AM111A4GG, AM111A4GN
AM111A4GE, AM111A4GL

Starting mode

Press the SETUP key to display the Setup screen.

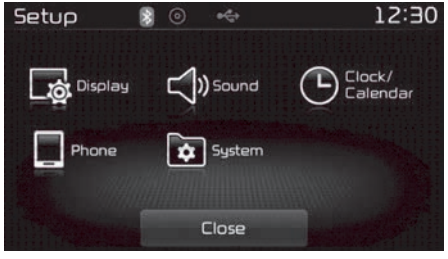

You can select and control options related to [Display], [Sound], [Clock/Calendar], [Phone] and [System].

Display settings

Adjusting the Brightness

Press the SETUP key ▶ Select [Display] ▶ Select [Brightness]



Use the ◀, ▶ buttons to adjust the screen brightness or set the Brightness on Automatic, Day, or Night mode.
Press the Default button to reset.

1. Automatic: Adjusts the brightness automatically
2. Daylight: Always maintains the brightness on high
3. Night: Always maintains the brightness on low

Pop up mode

Press the SETUP key ▶ Select [Display] ▶ Select [Mode Pop up]

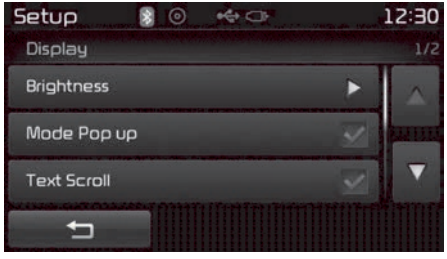

This feature is used to display the Pop-up Mode screen when entering radio and media modes.
When this feature is turned on, pressing the RADIO or MEDIA key will display the Pop-up Mode screen.

❈ NOTICE

The media Pop-up Mode screen can be displayed only when two or more media modes have been connected.

Text Scroll

Press the SETUP key ▶ Select [Display] ▶ Select [Text Scroll]

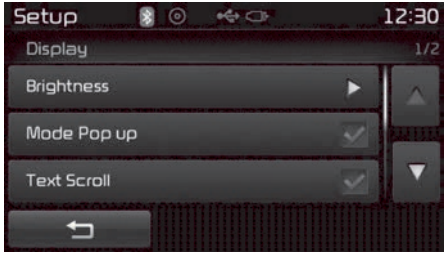

This feature is used to scroll text displayed on the screen when it is too long to be displayed at once.
When turned on, the text is repeatedly scrolled. When turned off, the text is scrolled just once.

MP3 Information Display

Press the SETUP key ▶ Select [Display] ▶ Select [Media Display]



This feature is used to change the information displayed within USB and MP3 CD modes.

1. Folder File: Displays file name and folder name
2. Album Artist Song: Displays album name/artist name/song

Sound settings

Sound Settings

Press the SETUP key ▶ Select [Sound] ▶ Select [Sound Setting]



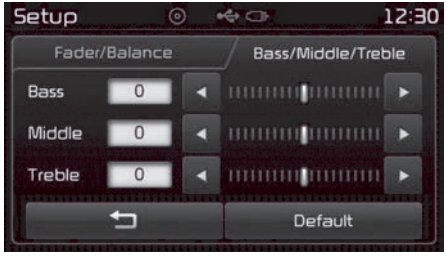

Use the ◀, ▶, ▲, ▼ buttons to adjust the Fader/Balance settings.
Use the ◀, ▶ buttons to adjust the Bass/Middle/Treble settings.
Press the Default button to reset.

SDVC (Speed Dependent Volume Control)

Press the SETUP key ▶ Select [Sound] ▶ Select [Speed Dependent Vol.]



The volume level is controlled automatically according to the vehicle speed. SDVC can be set by selecting from Off/Low/Mid/High.

Touch Screen Beep

Press the SETUP key ▶ Select [Sound] ▶ Select [Touch Screen Beep]

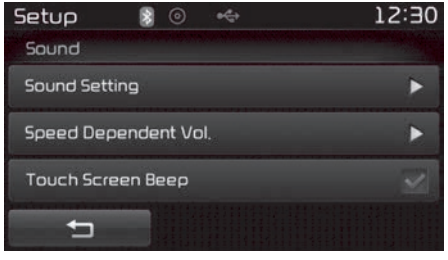

This feature is used to turn the touch screen beep on/off.

Clock/Calendar setting

Clock Setting

Press the SETUP key ▶ Select [Clock/Calendar] ▶ Select [Clock Settings]
Use the ▲,▼ buttons to set the Hour, Minutes and AM/PM setting.



✻ NOTICE

Press and hold the CLOCK key (over 0.8 seconds) to set the Clock/Calendar screen.

Calendar Setting

Press the SETUP key ▶ Select [Clock/Calendar] ▶ Select [Calendar Settings]

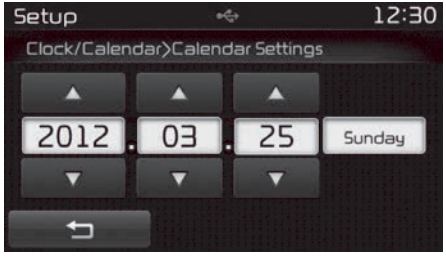

Use the ▲,▼ buttons to set the Day, Month and Year setting.

Clock Display

Press the SETUP key ▶ Select [Clock/Calendar] ▶ Select [Clock Display(Power off)]

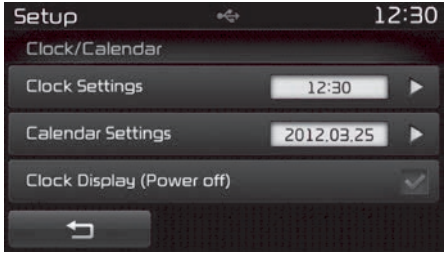

This feature is used to display a clock on the screen when the audio system is turned off.

Bluetooth® Wireless Technology Setting

Pairing a new device

Press the SETUP key ▶ Select [Phone] ▶ Select [Pair Phone]

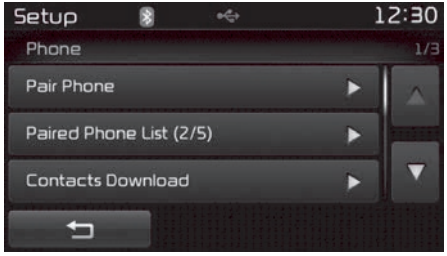

Bluetooth® Wireless Technology devices can be paired with the audio system.
For more information, refer to the "Pairing through phone setup" on page 5-89.

Viewing paired phone list

Press the SETUP key ▶ Select [Phone] ▶ Select [Paired Phone List]

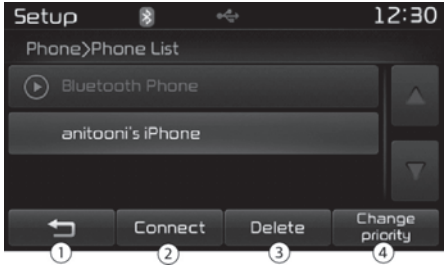

This feature is used to view mobile phones that have been paired with the audio system. Upon selecting a paired phone, the setup menu is displayed.
For more information, refer "Setting Bluetooth® Wireless Technology connection" on page 5-89.

1. : Moves to the previous screen
2. Connect/Disconnect Phone: Connect/disconnects currently selected phone
3. Delete: Deletes the currently selected phone
4. Change Priority: Sets currently selected phone to highest connection priority

✻ NOTICE

■ BEFORE DOWNLOADING CONTACTS

- Only contacts within connected phones can be downloaded. Also check to see that your mobile phone supports the download feature.

(Continued)

(Continued)

- To learn more about whether your mobile phone supports contacts downloads, refer to your mobile phone user's manual.
- The contacts for only the connected phone can be downloaded. Before downloading, check to see whether your phone supports the download feature.

Downloading Contacts

Press the SETUP key ▶ Select [Phone] ▶ Select [Contacts Download]



The contacts are downloaded from the mobile phone and the download progress is displayed.

✻ NOTICE

- Up to 1,000 contacts entries can be copied into car contacts.
- Up to 1,000 contacts entries can be saved for each paired device.
- Upon downloading contacts data, previously saved contacts data will be deleted. However, contacts entries saved to other paired phones are not deleted.

Auto Download (Contacts)

Press the SETUP key ▶ Select [Phone] ▶ Select [Auto Download]

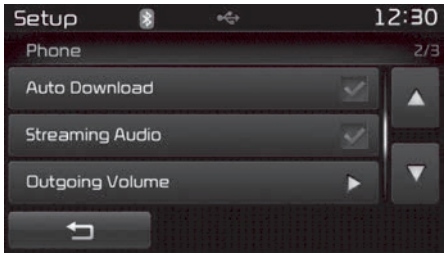

This feature is used to automatically download mobile contacts entries once a Bluetooth® Wireless Technology phone is connected.

✻ NOTICE

- The Auto Download feature will download mobile contacts entries every time the phone is connected. The download time may differ depending on the number of saved contacts entries and the communication state.
- When downloading contacts, first check to see that your mobile phone supports the contacts download feature.

Streaming Audio

Press the SETUP key ▶ Select [Phone] ▶ Select [Streaming Audio]

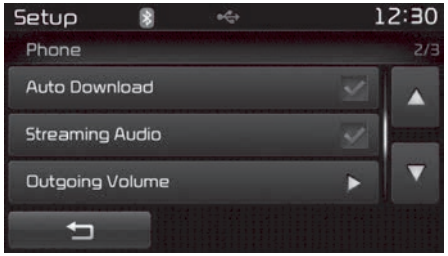

When Streaming Audio is turned on, you can play music files saved in your Bluetooth® Wireless Technology device from the car.

Outgoing Volume

Press the SETUP key ▶ Select [Phone] ▶ Select [Outgoing Volume]

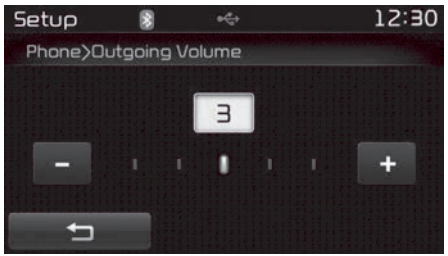

Use the -, + buttons to adjust the outgoing volume level.

Turning Bluetooth System Off

Press the SETUP key ▶ Select [Phone] ▶ Select [Bluetooth System Off]
Once Bluetooth® Wireless Technology is turned off, Bluetooth® Wireless Technology related features will not be supported within the audio system.

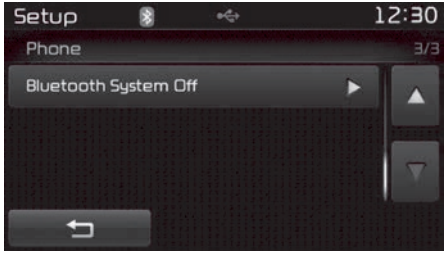

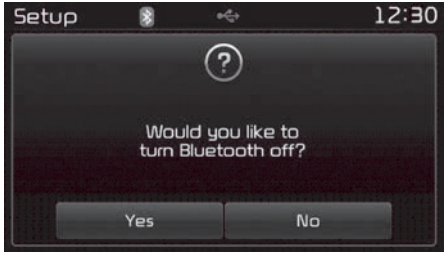

✻ NOTICE

To turn Bluetooth® Wireless Technology back on, go to SETUP ▶ [Phone] and press [Yes].

System setting

Memory Information

Press the SETUP key ▶ Select [System] ▶ Select [Memory Information]

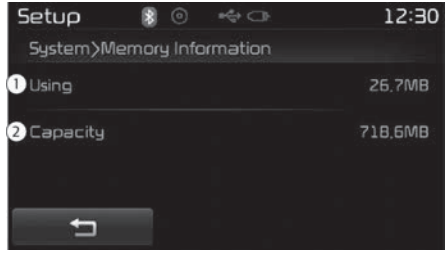

This feature displays information related to system memory.

1. Using: Displays capacity currently in use
2. Capacity: Displays total capacity

Language

Press the SETUP key ▶ Select [System] ▶ Select [Language]



This feature is used to change the system and voice recognition language.
If the language is changed, the system will restart and apply the selected language.

REAR VIEW CAMERA (IF EQUIPPED)

- The system has been equipped with a rear view camera for user safety by allowing a wider rear range of vision.
- The rear view camera will automatically operate when the ignition key is turned ON and the transmission lever is set to R.
- The rear view camera will automatically stop operating when set to a different lever.

⚠ CAUTION

The rear view camera has been equipped with an optical lens to provide a wider range of vision and may appear different from the actual distance. For safety, directly check the rear and left/right sides.

APPENDIX

Name	Description
12hr	12 HOUR
24hr	24 HOUR
AST(A.Store)	AUTO STORE
AMA	AM RADIO (AUTO STORE)
FMA	FM RADIO (AUTO STORE)
AUX	External Audio mode
BASS	BASS
TREBLE	TREBLE
BT	Bluetooth
PRESET	PRESET
RDS Search	Radio Data System Search
TA	Traffic Announcement
Radio	Radio
FM/AM/USB	FM/AM/USB
Max	Maximum
Min	Minimum
Low	Low
Mid	Middle
On	On
Off	Off
PowerBass	PowerBass

Name	Description
Setting	Setting
OK	OK
MENU	MENU
PowerTreble	PowerTreble
SDVC	Speed Dependent Volume Control
Setup	Setup
CURRENT	CURRENT
Current/Total	Current/Total
DEVICE NAME	DEVICE NAME
NAME	NAME
NAME HERE	NAME HERE
NUMBER	NUMBER
PHONE NAME	PHONE NAME
Received Date	Received Date
Received Message	Received Message
Received Time	Received Time
TIME	TIME
AST	AUTO STORE
AM	AM RADIO
CD	COMPACT DISC
FM	FM RADIO(AUTO STORE)

Name	Description
L=R	LEFT=RIGHT
Middle	Middle
My Music	My Music
Track	Track
USB	USB

Name	Description
Phone	Phone
Engineering Mode	Engineering Mode
SEEK	SEEK
Icon	Icon

Driving your vehicle

ENGINE EXHAUST CAN BE DANGEROUS!....6-03
Before driving....6-04
Before entering vehicle....6-04
Necessary inspections....6-04
Before starting....6-04
Key positions....6-06
Illuminated ignition switch....6-06
Ignition switch position....6-06
Starting the engine....6-07
Engine Start/Stop button....6-10
Illuminated Engine Start/Stop button....6-10
Engine Start/Stop button position....6-10
Starting the engine....6-12
ISG (Idle Stop and Go) system....6-16
Auto stop....6-16
Auto start....6-17
Condition of ISG system operation....6-17
ISG system deactivation....6-18
ISG system malfunction....6-18
Manual transaxle....6-20
Manual transaxle operation....6-20
Good driving practices....6-22
Automatic transaxle....6-24
Automatic transaxle operation....6-24
Good driving practices....6-29
Dual Clutch Transmission (DCT)....6-31
Dual clutch transmission operation....6-31
Good driving practices....6-37
Active ECO system....6-39
Active ECO operation....6-39
When Active ECO is activated....6-39
Limitation of Active ECO operation....6-39
Brake system....6-40
Power brakes....6-40
Parking brake - Hand type....6-41
Electronic parking brake (EPB)....6-43
Anti-lock brake system (ABS)....6-47
Electronic stability control (ESC)....6-49
Vehicle Stability Management (VSM)....6-52
Hill-start Assist Control (HAC)....6-53
Emergency Stop Signal (ESS)....6-54
Good braking practices....6-54
Cruise control system....6-56
Cruise control switch....6-57
To set cruise control speed....6-57
To increase cruise control set speed....6-58
To decrease the cruising speed....6-58
To temporarily accelerate with the cruise control on....6-58
To cancel cruise control....6-58
To resume cruising speed at more than approximately 30 km/h (20 mph)....6-59
To turn cruise control off....6-59
Speed limit control system....6-60
Speed limit control switch....6-60
To set speed limit....6-60
To turn off the speed limit control....6-61
Speed Limit Information Function (SLIF)....6-63
SLIF activation / deactivation....6-63
Operation....6-63
Display....6-64

Driver's attention 6-66
Lane Departure Warning System (LDWS) 6-67
Warning indicator 6-69
The LDWS does not operate when 6-69
The LDWS may not warn you 6-70
Blind Spot Detection system (BSD) 6-71
BSD (Blind Spot Detection)/LCA (Lane Change Assist) 6-71
RCTA (Rear Cross Traffic Alert) 6-74
Driver's attention 6-76
Economical operation 6-78
Special driving conditions 6-80
Hazardous driving conditions 6-80
Rocking the vehicle 6-80
Smooth cornering 6-81
Driving at night 6-81
Driving in the rain 6-81
Driving in flooded areas 6-81
Driving off-road 6-82
Highway driving 6-82
Winter driving 6-83
Snowy or icy conditions 6-83
Use high quality ethylene glycol coolant 6-85
Check battery and cables 6-85
Change to "winter weight" oil if necessary 6-85
Check spark plugs and ignition system 6-85
To keep locks from freezing 6-85
Use approved window washer anti-freeze in system 6-86
Don't let your parking brake freeze 6-86
Don't let ice and snow accumulate underneath 6-86
Carry emergency equipment 6-86
Trailer towing 6-87
Hitches 6-89
Safety chains 6-89
Trailer brakes 6-89
Loading the trailer 6-89
Tire pressure 6-89
Driving with a trailer 6-90
Maintenance when trailer towing 6-92
If you do decide to pull a trailer 6-93
Loading capacity of the trailer towing (for Europe) 6-95
Vehicle weight 6-97
Base curb weight 6-97
Vehicle curb weight 6-97
Cargo weight 6-97
GAW (Gross axle weight) 6-97
GAWR (Gross axle weight rating) 6-97
GVW (Gross vehicle weight) 6-97
GVWR (Gross vehicle weight rating) 6-97
Overloading 6-97

ENGINE EXHAUST CAN BE DANGEROUS!

⚠ WARNING

■ ENGINE EXHAUST CAN BE DANGEROUS!

Engine exhaust fumes can be extremely dangerous. If, at any time, you smell exhaust fumes inside the vehicle, open the windows immediately.

- **Do not inhale exhaust fumes.**
  Exhaust fumes contain carbon monoxide, a colorless, odorless gas that can cause unconsciousness and death by asphyxiation.
- **Be sure the exhaust system does not leak.**
  The exhaust system should be checked whenever the vehicle is raised to change the oil or for any other purpose. If you hear a change in the sound of the exhaust or if you drive over something that strikes the underneath side of the vehicle, have the system checked by a professional workshop. Kia recommends to visit an authorized Kia dealer/service partner.

(Continued)

(Continued)

- **Do not run the engine in an enclosed area.**
  Letting the engine idle in your garage, even with the garage door open, is a hazardous practice. Never run the engine in your garage any longer than it takes to start the engine and back the vehicle out.
- **Avoid idling the engine for prolonged periods with people inside the vehicle.**
  If it is necessary to idle the engine for a prolonged period with people inside the vehicle, be sure to do so only in an open area with the air intake set at "Fresh" and fan operating at one of the higher speeds so fresh air is drawn into the interior.

If you must drive with the tailgate/trunk open because you are carrying objects that make this necessary:

1. **Close all windows.**
2. **Open side vents.**

(Continued)

(Continued)

3. **Set the air intake control at "Fresh", the air flow control at "Floor" or "Face" and the fan at one of the higher speeds.**

To assure proper operation of the ventilation system, be sure the ventilation air intakes located just in front of the windshield are kept clear of snow, ice, leaves or other obstructions.

BEFORE DRIVING

Before entering vehicle

- Be sure that all windows, outside mirror(s), and outside lights are clean.
- Check the condition of the tires.
- Check under the vehicle for any sign of leaks.
- Be sure there are no obstacles behind you if you intend to back up.

Necessary inspections

Fluid levels, such as engine oil, engine coolant, brake fluid, and washer fluid should be checked on a regular basis, with the exact interval depending on the fluid. Further details are provided in Chapter 8, Maintenance.

⚠ WARNING

Driving while distracted can result in a loss of vehicle control, that may lead to an accident, severe personal injury, and death. The driver's primary responsibility is in the safe and legal operation of a vehicle, and use of any handheld devices, other equipment, or vehicle systems which

(Continued)

(Continued)

take the driver's eyes, attention and focus away from the safe operation of a vehicle or which are not permissible by law should never be used during operation of the vehicle.

Before starting

- Close and lock all doors.
- Position the seat so that all controls are easily reached.
- Adjust the inside and outside rear-view mirrors.
- Be sure that all lights work.
- Check all gauges.
- Check the operation of warning lights when the ignition switch is turned to the ON position.
- Release the parking brake and make sure the brake warning light goes out.

For safe operation, be sure you are familiar with your vehicle and its equipment.

⚠ WARNING

All passengers must be properly belted whenever the vehicle is moving. Refer to "Seat belts" on page 3-21 for more information on their proper use.

⚠ WARNING

Always check the surrounding areas near your vehicle for people, especially children, before putting a vehicle into "D (Drive)" or "R (Reverse)".

⚠ WARNING

■ Driving under the influence of alcohol or drugs

Drinking and driving is dangerous. Drunk driving is the number one contributor to the highway death toll each year. Even a small amount of alcohol will affect your reflexes, perceptions and judgement. Driving

(Continued)

(Continued)

while under the influence of drugs is as dangerous or more dangerous than driving drunk.
You are much more likely to have a serious accident if you drink or take drugs and drive.
If you are drinking or taking drugs, don't drive. Do not ride with a driver who has been drinking or taking drugs. Choose a designated driver or call a cab.

⚠ WARNING

- When you intend to park or stop the vehicle with the engine on, be careful not to depress the accelerator pedal for a long period of time. It may overheat the engine or exhaust system and cause fire.

(Continued)

(Continued)

- When you make a sudden stop or turn the steering wheel rapidly, loose objects may drop on the floor and it could interfere with the operation of the foot pedals, possibly causing an accident. Keep all things in the vehicle safely stored.
- If you do not focus on driving, it may cause an accident. Be careful when operating what may disturb driving such as audio or heater. It is the responsibility of the driver to always drive safely.

KEY POSITIONS

Illuminated ignition switch

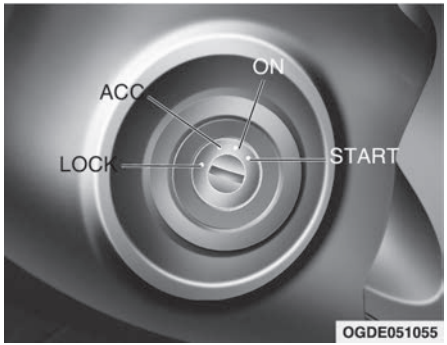

Whenever a front door is opened, the ignition switch will be illuminated for your convenience, provided the ignition switch is not in the ON position. The light will go off immediately when the ignition switch is turned on or go off after about 30 seconds when the door is closed.

Ignition switch position

LOCK

The steering wheel locks to protect against theft. The ignition key can be removed only in the LOCK position. When turning the ignition switch to the LOCK position, push the key inward at the ACC position and turn the key toward the LOCK position.

ACC (Accessory)

The steering wheel is unlocked and electrical accessories are operative.

✻ NOTICE

If difficulty is experienced turning the ignition switch to the ACC position, turn the key while turning the steering wheel right and left to release the tension.

On

The warning lights can be checked before the engine is started. This is the normal running position after the engine is started.

Do not leave the ignition switch ON if the engine is not running to prevent battery discharge.

START

Turn the ignition key to the START position to start the engine. The engine will crank until you release the key; then it returns to the ON position. The brake warning lamp can be checked in this position.

⚠ WARNING

■ Ignition key

- **Never turn the ignition switch to LOCK or ACC while the vehicle is moving. This would result in loss of directional control and braking function, which could cause an accident.**

(Continued)

(Continued)

- **The anti-theft steering column lock (if equipped) is not a substitute for the parking brake. Before leaving the driver's seat, always make sure the shift lever is engaged in 1st gear for the manual transaxle or P (Park) for the automatic transaxle / dual clutch transmission, set the parking brake fully and shut the engine off. Unexpected and sudden vehicle movement may occur if these precautions are not taken.**
- **Never reach for the ignition switch, or any other controls through the steering wheel while the vehicle is in motion. The presence of your hand or arm in this area could cause a loss of vehicle control, an accident and serious bodily injury or death.**
- **Do not place any movable objects around the driver's seat as they may move while driving, interfere with the driver and lead to an accident.**

Starting the engine

⚠ WARNING

- **Always wear appropriate shoes when operating your vehicle. Unsuitable shoes (high heels, ski boots, etc.) may interfere with your ability to use the brake, accelerator and clutch (if equipped) pedal.**
- **Do not start the vehicle with the accelerator pedal depressed. The vehicle can move and lead to an accident.**
- **Wait until the engine rpm is normal. The vehicle may suddenly move if the brake pedal is released when the rpm is high.**

✻ NOTICE

■ Kick down mechanism (if equipped)

If your vehicle is equipped with a kick down mechanism in the accelerator

(Continued)

(Continued)

pedal, it prevents you from driving at full throttle unintentionally by making the driver require increased effort to depress the accelerator pedal. However, if you depress the pedal more than approximately 82%, the vehicle can be at full throttle and the accelerator pedal will be easier to depress. This is not a malfunction but a normal condition.

Starting the gasoline engine

1. Make sure the parking brake is applied.
2. Manual Transaxle - Depress the clutch pedal fully and shift the transaxle into Neutral. Keep the clutch pedal and brake pedal depressed while turning the ignition switch to the start position.
   Automatic Transaxle - Place the transaxle shift lever in P (Park). Depress the brake pedal fully.

   You can also start the engine when the shift lever is in the N (Neutral) position.

3. Turn the ignition switch to START and hold it there until the engine starts (a maximum of 10 seconds), then release the key.

   It should be started ***without depressing the accelerator pedal.***

4. Do not wait for the engine to warm up while the vehicle remains stationary.
   Start driving at moderate engine speeds. (Steep accelerating and decelerating should be avoided.)

⚠ CAUTION

If the engine stalls while you are in motion, do not attempt to move the shift lever to the P (Park) position. If traffic and road conditions permit, you may put the shift lever in the N (Neutral) position while the vehicle is still moving and turn the ignition switch to the START position in an attempt to restart the engine.

⚠ CAUTION

- **Do not engage the starter for more than 10 seconds. If the engine stalls or fails to start, wait 5 to 10 seconds before re-engaging the starter. Improper use of the starter may damage it.**
- **Do not turn the ignition switch to the START position with the engine running. It may damage the starter.**

Starting the diesel engine

To start the diesel engine when the engine is cold, it has to be pre-heated before starting the engine and then have to be warmed up before starting to drive.

1. Make sure the parking brake is applied.
2. Manual Transaxle - Depress the clutch pedal fully and shift the transaxle into Neutral. Keep the clutch pedal and brake pedal depressed while turning the ignition switch to the start position.
   Dual Clutch Transmission - Place the transaxle shift lever in P (park). Depress the brake pedal fully.

   You can also start the engine when the shift lever is in the N (neutral) position.

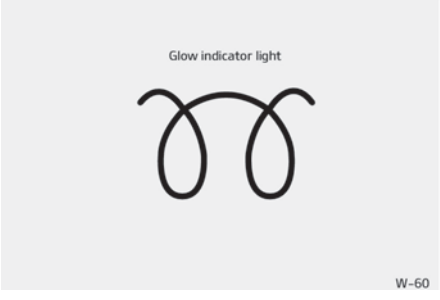

3. Turn the ignition switch to the ON position to pre-heat the engine. Then the glow indicator light will illuminate.

4. If the glow indicator light goes out, turn the ignition switch to the START position and hold it there until the engine starts (a maximum of 10 seconds), then release the key.

✻ NOTICE

If the engine does not start within 10 seconds after the preheating is completed, turn the ignition key once more to the LOCK position for 10 seconds, and then to the ON position, in order to preheat again.

Starting and stopping the engine for turbo charger intercooler

1. Do not race or accelerate the engine immediately after starting.
   If the engine is cold, idle for several seconds before sufficient lubrication is ensured in the turbo charger unit.
2. After high speed or extended driving, requiring a heavy engine load, run the engine on idle condition about 1 minute before turning it off.
   This idle time will allow the turbo charger to cool prior to shutting the engine off.

⚠ CAUTION

Do not turn off the engine immediately after it has been subjected to a heavy load. Doing so may cause severe damage to the engine or turbo charger unit.

Stopping manual transaxle vehicles

1. After safely parking the vehicle, press the clutch pedal and brake pedal at the same time.
2. While depressing the clutch pedal and brake pedal at the same time, shift the transaxle lever to 'N'.

ENGINE START/STOP BUTTON (IF EQUIPPED)

Illuminated Engine Start/Stop button



Whenever the front door is opened, the engine start/stop button will illuminate for your convenience. The light will go off after about 30 seconds when the door is closed. It will also go off immediately when the theft-alarm system is armed.

Engine Start/Stop button position

OFF



White

With manual transaxle

To turn off the engine (START/RUN position) or vehicle power (ON position), stop the vehicle then press the engine start/stop button.

With automatic transaxle/Dual clutch transmission

To turn off the engine (START/RUN position) or vehicle power (ON position), press the engine start/stop button with the shift lever in the P (Park) position. When you press the engine start/stop button without the shift lever in the P (Park) position, the engine start/stop button will not change to the OFF position but to the ACC position.

Vehicles equipped with anti-theft steering column lock

The steering wheel locks when the engine start/stop button is in the OFF position to protect you against theft. It locks when the door is opened.

If the steering wheel is not locked properly when you open the driver's door, the warning chime will sound. Try locking the steering wheel again. If the problem is not solved, have the system checked by a professional workshop. Kia recommends to visit an authorized Kia dealer/service partner.
In addition, if the engine start/stop button is in the OFF position after the driver's door is opened, the steering wheel will not lock and the warning chime will sound. In such a situation, close the door. Then the steering wheel will lock and the warning chime will stop.

✻ NOTICE

If the steering wheel doesn't unlock properly, the engine start/stop button will not work. Press the engine start/stop button while turning the steering wheel right and left to release the tension.

⚠ CAUTION

You are able to turn off the engine (START/RUN) or vehicle power (ON), only when the vehicle is not in motion. In an emergency situation while the vehicle is in motion, you are able to turn the engine off and to the ACC position by pressing the engine start/stop button for more than 2 seconds or 3 times successively within 3 seconds. If the vehicle is still moving, you can restart the engine without depressing the brake pedal by pressing the engine start/stop button with the shift lever in the N (Neutral) position.

ACC (Accessory)



Orange

With manual transaxle

Press the engine start/stop button when the button is in the OFF position without depressing the clutch pedal.

With automatic transaxle/Dual clutch transmission

Press the engine start/stop button while it is in the OFF position without depressing the brake pedal.

The steering wheel unlocks (if equipped with anti-theft steering column lock) and electrical accessories are operational.

If the engine start/stop button is in the ACC position for more than 1 hour, the button is turned off automatically to prevent battery discharge.

ON



Red

With manual transaxle

Press the engine start/stop button when the button is in the ACC position without depressing the clutch pedal.

With automatic transaxle/Dual clutch transmission

Press the engine start/stop button while it is in the ACC position without depressing the brake pedal.

The warning lights can be checked before the engine is started. Do not leave the engine start/stop button in the ON position for a long time. The battery may discharge, because the engine is not running.

START/RUN



With manual transaxle

To start the engine, depress the clutch pedal and brake pedal, then press the engine start/stop button with the shift lever in the N (Neutral) position.

With automatic transaxle/Dual clutch transmission

To start the engine, depress the brake pedal and press the engine start/stop button with the shift lever in the P (Park) or the N (Neutral) position. For your safety, start the engine with the shift lever in the P (Park) position.

✻ NOTICE

If you press the engine start/stop button without depressing the clutch pedal for manual transaxle vehicles or without depressing the brake pedal for automatic transaxle / dual clutch transmission vehicles, the engine will not start and the engine start/stop button changes as follows:
OFF ➡ ACC ➡ ON ➡ OFF or ACC

✻ NOTICE

If you leave the engine start/stop button in the ACC or ON position for a long time, the battery will discharge.

⚠ CAUTION

If the driver takes foot off the clutch pedal of a manual transaxle vehicle before the engine is fully started, the engine may not start.
Make sure to fully depress the clutch pedal and brake pedal to start the engine.

⚠ WARNING

- **Never press the engine start/stop button while the vehicle is in motion. This would result in loss of directional control and braking function, which could cause an accident.**

(Continued)

(Continued)

- **The anti-theft steering column lock (if equipped) is not a substitute for the parking brake. Before leaving the driver's seat, always make sure the shift lever is engaged in P (Park), set the parking brake fully and shut the engine off. Unexpected and sudden vehicle movement may occur if these precautions are not taken.**
- **Never reach for the engine start/stop button or any other controls through the steering wheel while the vehicle is in motion. The presence of your hand or arm in the area could cause loss of vehicle control, an accident and serious bodily injury or death.**
- **Do not place any movable objects around the driver's seat as they may move while driving, interfere with the driver and lead to an accident.**

Starting the engine

⚠ WARNING

- **Always wear appropriate shoes when operating your vehicle. Unsuitable shoes (high heels, ski boots, etc.) may interfere with your ability to use the brake, accelerator and clutch (if equipped) pedal.**
- **Do not start the vehicle with the accelerator pedal depressed. The vehicle can move and lead to an accident.**
- **Wait until the engine rpm is normal. The vehicle may suddenly move if the brake pedal is released when the rpm is high.**

✻ NOTICE

■ Kick down mechanism (if equipped)

If your vehicle is equipped with a kick down mechanism in the accelerator

(Continued)

(Continued)

pedal, it prevents you from driving at full throttle unintentionally by making the driver require increased effort to depress the accelerator pedal. However, if you depress the pedal more than approximately 82%, the vehicle can be at full throttle and the accelerator pedal will be easier to depress. This is not a malfunction but a normal condition.

Starting the gasoline engine

1. Carry the smart key or leave it inside the vehicle.
2. Make sure the parking brake is firmly applied.
3. **Manual Transaxle** – Depress the clutch pedal fully and shift the transaxle into Neutral. Keep the clutch pedal and brake pedal depressed while starting the engine.
   Automatic transaxle – Place the transaxle shift lever in P (Park). Depress the brake pedal fully.

   You can also start the engine when the shift lever is in the N (Neutral) position.
4. Press the engine start/stop button. It should be started **without depressing the accelerator.**
   Manual Transaxle
   To start the vehicle, keep the clutch pedal and brake pedal depressed, and make sure the engine RPM is within normal range (under 1,000 rpm). After checking, shift the transaxle shift lever to the desired position.
   Unlock the parking brake, and take your foot off the clutch pedal. Then, lightly depress the accelerator pedal and slowly start the vehicle.
5. Do not wait for the engine to warm up while the vehicle remains stationary.
   Start driving at moderate engine speeds. (Steep accelerating and decelerating should be avoided.)

Starting the diesel engine

To start the diesel engine when the engine is cold, it has to be pre-heated before starting the engine and then have to be warmed up before starting to drive.

1. Make sure the parking brake is applied.
2. **Manual Transaxle** – Depress the clutch pedal fully and shift the transaxle into Neutral. Keep the clutch pedal and brake pedal depressed while pressing the engine start/stop button to the START position.
   Dual clutch transmission – Place the transaxle shift lever in P (Park). Depress the brake pedal fully.

   You can also start the engine when the shift lever is in the N (Neutral) position.

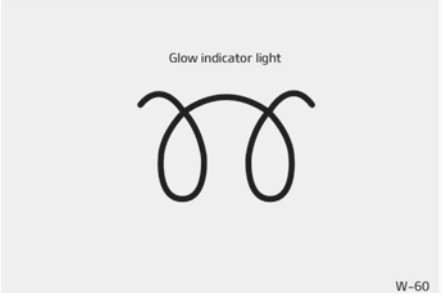

3. Press the engine start/stop button while depressing the brake pedal.
4. Continue depressing the brake pedal until the illuminated glow indicator goes off. (approximately 5 seconds)

5. The engine starts running when the glow indicator goes off.

✻ NOTICE

If the engine start/stop button is pressed once more while the engine is pre-heating, the engine may start.

Starting and stopping the engine for turbocharger intercooler

1. Do not race or accelerate the engine immediately after starting.
   If the engine is cold, idle for several seconds before sufficient lubrication is ensured in the turbocharger unit.
2. After high speed or extended driving, requiring a heavy engine load, idle the engine about 1 minute before turning it off.
   This idle time will allow the turbocharger to cool prior to shutting the engine off.

⚠ CAUTION

Do not turn the engine off immediately after it has been subjected to a heavy load. Doing so may cause severe damage to the engine or turbocharger unit.

Stopping manual transaxle vehicles

1. After safely parking the vehicle, press the clutch pedal and brake pedal at the same time.
2. While depressing the clutch pedal and brake pedal at the same time, shift the transaxle lever to 'N'.

- Even if the smart key is in the vehicle, if it is far away from you, the engine may not start.
- When the engine start/stop button is in the ACC position or above, if any door is opened, the system checks for the smart key. If the smart key is not in the vehicle, a message "Key is not in the vehicle" will appear on the LCD display. And if all doors are closed, the chime will sound for 5 seconds. The indicator or warning will turn off while the vehicle is moving. Always have the smart key with you.

⚠ WARNING

The engine will start, only when the smart key is in the vehicle.
Never allow children or any person who is unfamiliar with the vehicle touch the engine start/stop button or related parts.

⚠ CAUTION

If the engine stalls while the vehicle is in motion, do not attempt to move the shift lever to the P (Park) position. If the traffic and road conditions permit, you may put the shift lever in the N (Neutral) position while the vehicle is still moving and press the engine start/stop button in an attempt to restart the engine.

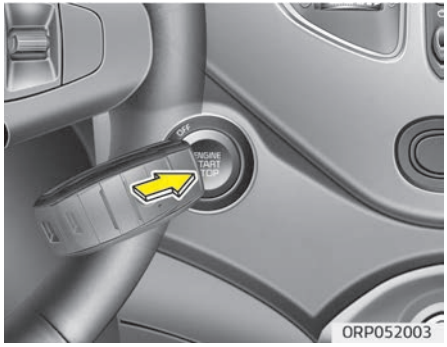

✻ NOTICE

- If the battery is weak or the smart key does not work correctly, you can start the engine by pressing the engine start/stop button with the smart key.
  The side with the lock button should be contacted directly.
  When you press the engine start/stop button directly with the smart key, the smart key should contact the button at a right angle.

(Continued)

(Continued)

- When the stop lamp fuse is blown, you cannot start the engine normally.
  Replace the fuse with a new one. If it is not possible, you can start the engine by pressing the engine start/stop button for 10 seconds while it is in the ACC position. The engine can start without depressing the brake pedal. But for your safety always depress the brake and clutch (if equipped) pedal before starting the engine.

⚠ CAUTION

Do not press the engine start/stop button for more than 10 seconds except when the stop lamp fuse is blown.

ISG (IDLE STOP AND GO) SYSTEM (IF EQUIPPED)

Your vehicle may be equipped with the ISG system, which reduces fuel consumption by automatically shutting down the engine, when the vehicle is at a standstill. (For example: red light, stop sign and traffic jam)
The engine starts automatically as soon as the starting conditions are met.
The ISG system is ON whenever the engine is running.

✻ NOTICE

When the engine automatically starts by the ISG system, some warning lights (ABS, ESC, ESC OFF, EPS or Parking brake warning light) may turn on for a few seconds.
This happens because of low battery voltage. It does not mean the system has malfunctioned.

Auto stop

To stop the engine in idle stop mode

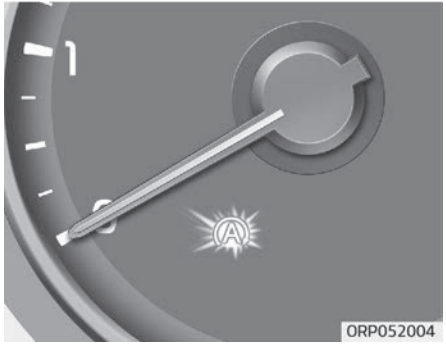

With manual transaxle

1. Decrease the vehicle speed to less than 5 km/h (3 mph).
2. Shift into N (Neutral) position.
3. Release the clutch pedal.

With dual clutch transmission

1. Decrease the vehicle speed to 0 km/h.
2. Shift into D (Drive) or N (Neutral) position.
3. Press the brake pedal.

The engine will stop and the green AUTO STOP (Ⓐ) indicator on the instrument cluster will illuminate.

✻ NOTICE

You must reach a speed of at least 10 km/h (6 mph) since last idle stop.

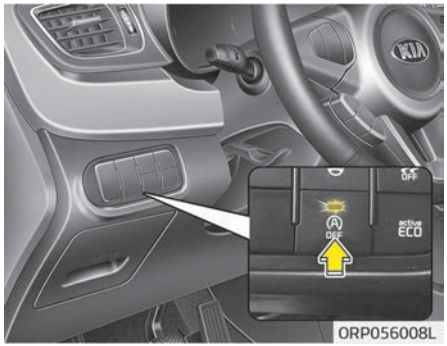

✻ NOTICE

If you unfasten the seatbelt or open the driver's door (or engine hood) in auto stop mode, the following will happen:

- The ISG system will deactivate (the light on the ISG OFF button will illuminate).
- A message "Auto Start deactivated Start manually" will appear on the LCD display.

Auto start

To restart the engine from idle stop mode

With manual transaxle

- Press the clutch pedal when the shift lever is in the N (Neutral) position.
- The engine will start and the green AUTO STOP (Ⓐ) indicator on the instrument cluster will go out.

With dual clutch transmission / Automatic transaxle

- Release the brake pedal.

The engine will also restart automatically without the driver's any actions if the following occurs:

- The fan speed of manual climate control system is set above the 3rd position when the air conditioning is on.
- The fan speed of automatic climate control system is set above the 6th position when the air conditioning is on.
- When a certain amount of time has passed with the climate control system on.
- When the defroster is on.
- The brake vacuum pressure is low.
- The battery charging status is low.
- The vehicle speed exceeds 5 km/h (3 mph). (with manual transaxle)
- The vehicle speed exceeds 2 km/h (1.2 mph). (with dual clutch transmission)
- Move the shift gear to the R (Reverse) position or the sports mode while depressing the brake pedal. (with dual clutch transmission)

The green AUTO STOP (Ⓐ) indicator on the instrument cluster will blink for 5 seconds.

Condition of ISG system operation

The ISG system will operate under the following condition

- The driver's seat belt is fastened.
- The driver's door and engine hood are closed.
- The brake vacuum pressure is adequate.
- The battery is sufficiently charged.
- The engine coolant temperature is not too low.
- The slope way is gentle. (with dual clutch transmission)

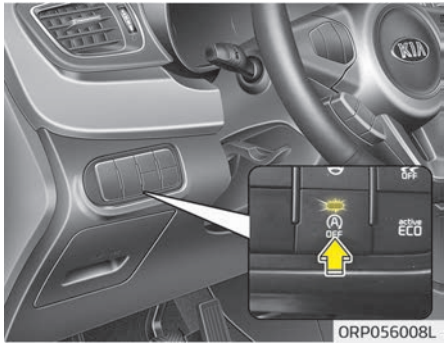

✻ NOTICE

- If the ISG system does not meet the operation condition, the ISG system is deactivated. The light on the ISG OFF button will illuminate and a message "Auto Stop deactivated. Start manually" will appear on the LCD display.
- If the light or notice comes on continuously, please check the operation condition.

ISG system deactivation

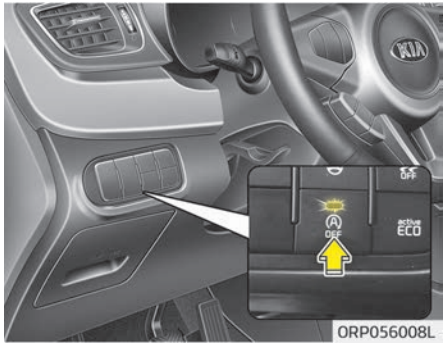

- If you wish to deactivate the ISG system, press the ISG OFF button. The light on the ISG OFF button will illuminate and a message "Auto Stop System OFF" will appear on the LCD display.
- If you press the ISG OFF button again, the system will be activated and the light on the ISG OFF button will turn off.

ISG system malfunction

The system may not operate when:

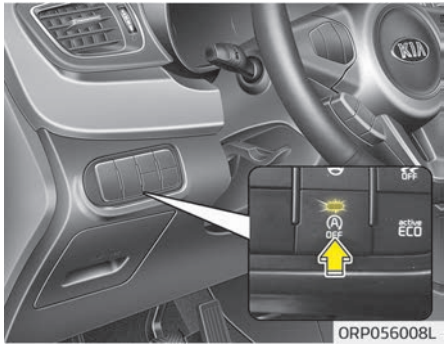

The ISG related sensors or system error occurs.
The following will happen:

- The yellow AUTO STOP (Ⓐ) indicator on the instrument cluster will stay on after blinking for 5 seconds.
- The light on the ISG OFF button will illuminate.

✻ NOTICE

- If the ISG OFF button light is not turned off by pressing the ISG OFF button again or if the ISG system continuously does not work correctly, have your vehicle inspected by a professional workshop as soon as possible.
  Kia recommends to contact an authorized Kia dealer/service partner.
- When the ISG OFF button light comes on, it may stop illuminating after driving your vehicle at approximately 80 km/h for a maximum of two hours and setting the fan speed control knob below the 2nd position. If the ISG OFF button light continues to be illuminated in spite of the procedure, have your vehicle inspected by a professional workshop as soon as possible. Kia recommends to contact an authorized Kia dealer/service partner.

⚠ WARNING

When the engine is in Idle Stop mode, it's possible to restart the engine without the driver taking any action.
Before leaving the car or doing anything in the engine room area, stop the engine by turning the ignition switch to the LOCK/OFF position or removing the ignition key.

MANUAL TRANSAXLE (IF EQUIPPED)

Manual transaxle operation

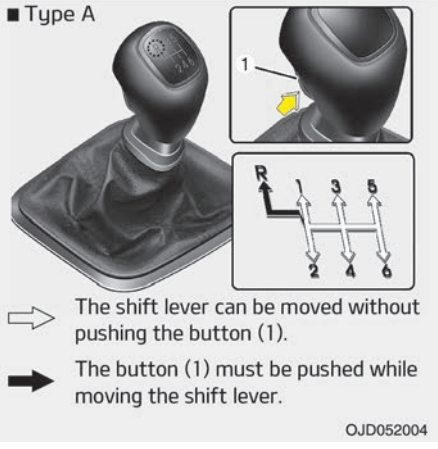

- The manual transaxle has 6 forward gears.
  This shift pattern is imprinted on the shift knob. The transaxle is fully synchronized in all forward gears so shifting to either a higher or a lower gear is easily accomplished.
- Depress the clutch pedal down fully while shifting, then release it slowly.
  If your vehicle is equipped with an ignition lock switch, the engine will not start when starting the engine without depressing the clutch pedal.
  In order to start the vehicle, slowly let go of the fully depressed clutch pedal. Then, push the accelerator pedal to start.
- The shift lever must return to the neutral position before shifting into R (Reverse). The button located immediately below the shift knob must be pushed upward while moving the shift lever to the R (Reverse) position.
- *Make sure the vehicle is completely stopped before shifting into R (Reverse).*

  Never operate the engine with the tachometer (rpm) in the red zone.

⚠ CAUTION

- **When downshifting from 5 (Fifth) gear to 4 (Fourth) gear, caution should be taken not to inadvertently move the shift lever sideways in such a manner that second gear is engaged. Such a drastic downshift may cause the engine speed to increase to the point that the tachometer will enter the red-zone. Such over-revving of the engine may possibly cause engine and transaxle damage.**
- **Do not downshift more than 2 gears or downshift the gear when the engine is running at high speed (5,000 RPM or higher). Such a downshifting may damage the engine, clutch and the transaxle.**
- **When shifting between 5th and 6th gear, you should always push the gear level all the way to the right. You could otherwise shift unintentionally into 3rd or 4th gear and damage the transaxle.**

- During cold weather, shifting may be difficult until the transaxle lubricant has warmed up. This is normal and not harmful to the transaxle.
- If you've come to a complete stop and it's hard to shift into 1 (First) or R (Reverse), put the shift lever in neutral position and release the clutch. Press the clutch pedal back down, and then shift into 1 (First) or R (Reverse) gear position.

⚠ CAUTION

- **To avoid premature clutch wear and damage, do not drive with your foot resting on the clutch pedal. Also, don't use the clutch to hold the vehicle stopped on an uphill grade, while waiting for a traffic light, etc.**
- **Do not use the shift lever as a handrest during driving, as this can result in premature wear of the transaxle shift forks.**

(Continued)

(Continued)

- **To prevent possible damage to the clutch system, do not start with the 2nd (second) gear engaged except when you start on a slippery road.**
- **Do not exceed the maximum weight limits of the loading weight. Improper loading can result in damage to clutch system.**

⚠ WARNING

- **Before leaving the driver's seat, always set the parking brake fully and shut the engine off. Then make sure the transaxle is shifted into 1 (First) gear when the vehicle is parked on a level or uphill grade, and shifted into R (Reverse) on a downhill grade.**
  Unexpected and sudden vehicle movement can occur if these precautions are not followed in the order identified.

(Continued)

(Continued)

- **If your vehicle has a manual transaxle not equipped with a ignition lock switch, it may move and cause a serious accident when starting the engine without depressing the clutch pedal while the parking brake is released and the shift lever not in the neutral position.**
- **Do not use the engine brake (shifting from a high gear to lower gear) rapidly on slippery roads.**
  The vehicle may slip causing an accident.

Using the clutch

The clutch pedal should be depressed all the way to the floor before shifting, then released slowly. The clutch pedal should always be fully released while driving. Do not rest your foot on the clutch pedal while driving. This can cause unnecessary wear. Do not partially engage the clutch to hold the vehicle on an incline. This causes unnecessary wear. Use the foot brake or parking brake to hold the vehicle on an incline. Do not operate the clutch pedal rapidly and repeatedly.

⚠ CAUTION

- **If half-clutch*1 driving style is adopted, or the driver's foot is placed on the pedal while driving, the clutch may be damaged or worn out prematurely.**
- **While parking on a steep grade, do not use half clutch method to park the vehicle. It will cause premature wear of the clutch disc.**
- **While driving at fast speed, do not abruptly shift to low speed. It may lead to engine and transaxle damage.**

⚠ CAUTION

When operating the clutch pedal, depress the clutch pedal down fully. If you don't depress the clutch pedal
(Continued)

*1 Half clutch? A condition where the clutch is half-engaged and sliding. It may occur when the clutch pedal is partially depressed (not fully depressed), or vehicle power is transferred to the clutch before the pedal is fully let go.

(Continued)

fully, the clutch may be damaged or noise may occur.

⚠ WARNING

- **When starting a fully stopped vehicle, refrain to start in 2nd gear. When starting in 2nd gear, abnormal clutch disc friction heat may occur and result in clutch cover and clutch disc damage.**
- **When the vehicle is in motion, please refrain from using half clutch. The use of half clutch while the vehicle is in motion may result in early clutch disc wear, abnormal vibration or noise.**
- **The clutch pedal should be depressed fully for any operation. When letting go of the depressed pedal, make sure not to depress the pedal again before the pedal goes back to its initial position. If such unintended re-depressing occurs, the clutch system may be damaged.**

Downshifting

When you must slow down in heavy traffic or while driving up steep hills, downshift before the engine starts to labor. Downshifting reduces the chance of stalling and gives better acceleration when you again need to increase your speed. When the vehicle is traveling down steep hills, downshifting helps maintain safe speed and prolongs brake life.

Good driving practices

- Never take the vehicle out of gear and coast down a hill. This is extremely hazardous. Always leave the vehicle in gear.
- Don't "ride" the brakes. This can cause them to overheat and malfunction. Instead, when you are driving down a long hill, slow down and shift to a lower gear. When you do this, engine braking will help slow down the vehicle.
- Slow down before shifting to a lower gear. This will help avoid over-revving the engine, which can cause damage.
- Slow down when you encounter cross winds. This gives you much better control of your vehicle.

- Be sure the vehicle is completely stopped before you attempt to shift into R (Reverse). The transaxle can be damaged if you do not. To shift into R (Reverse), depress the clutch, move the shift lever to neutral, wait three seconds, then shift to the R (Reverse) position.
- Exercise extreme caution when driving on a slippery surface. Be especially careful when braking, accelerating or shifting gears. On a slippery surface, an abrupt change in vehicle speed can cause the drive wheels to lose traction and the vehicle to go out of control.

⚠ WARNING

- **Always buckle-up! In a collision, an unbelted occupant is significantly more likely to be seriously injured or killed than a properly belted occupant.**
- **Avoid high speeds when cornering or turning.**

(Continued)

(Continued)

- **Do not make quick steering wheel movements, such as sharp lane changes or fast, sharp turns.**
- **The risk of rollover is greatly increased if you lose control of your vehicle at highway speeds.**
- **Loss of control often occurs if two or more wheels drop off the roadway and the driver oversteers to reenter the roadway.**
- **In the event your vehicle leaves the roadway, do not steer sharply. Instead, slow down before pulling back into the travel lanes.**
- **Never exceed posted speed limits.**

AUTOMATIC TRANSAXLE (IF EQUIPPED)

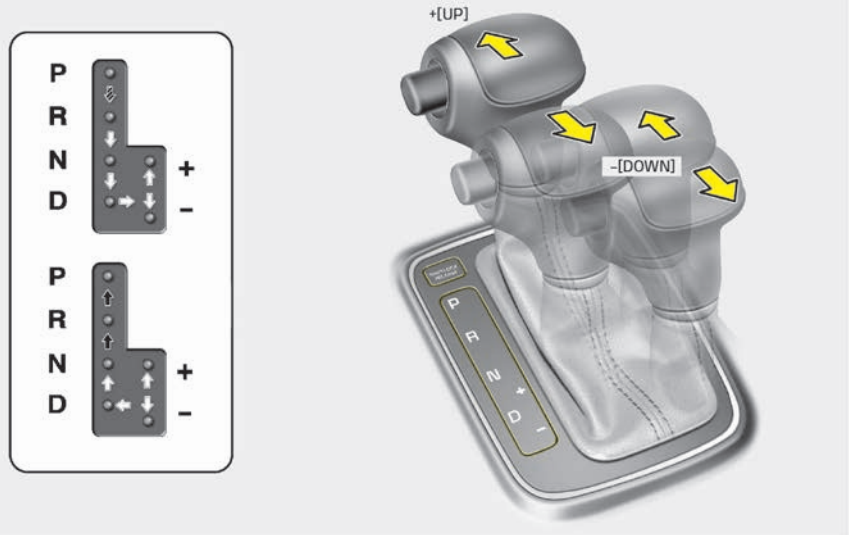

Automatic transaxle operation

The automatic transaxle has 6 forward speeds and one reverse speed. The individual speeds are selected automatically, depending on the position of the shift lever.

✻ NOTICE

The first few shifts on a new vehicle, if the battery has been disconnected, may be somewhat abrupt. This is a normal condition, and the shifting sequence will adjust after shifts are cycled a few times by the TCM (Transaxle Control Module) or PCM (Powertrain Control Module).

For smooth operation, depress the brake pedal when shifting from N (Neutral) to a forward or reverse gear.

⚠ WARNING

■ Automatic transaxle (Continued)

(Continued)

- **Always check the surrounding areas near your vehicle for people, especially children, before shifting a vehicle into D (Drive) or R (Reverse).**
- **Before leaving the driver's seat, always make sure the shift lever is in the P (Park) position; then set the parking brake fully and shut the engine off. Unexpected and sudden vehicle movement can occur if these precautions are not followed in the order identified.**
- **Do not use the engine brake (shifting from a high gear to lower gear) rapidly on slippery roads. The vehicle may slip causing an accident.**

⚠ CAUTION

- **To avoid damage to your transaxle, do not accelerate the engine in R (Reverse) or any forward gear position with the brakes on.**

(Continued)

(Continued)

- **When stopped on an upgrade, do not hold the vehicle stationary with engine power. Use the service brake or the parking brake.**
- **Do not shift from N (Neutral) or P (Park) into D (Drive), or R (Reverse) when the engine is above idle speed.**

Transaxle ranges

The indicator lights in the instrument cluster displays the shift lever position when the ignition switch is in the ON position.

P (Park)

Always come to a complete stop before shifting into P (Park). This position locks the transaxle and prevents the front wheels from rotating.

⚠ WARNING

- **Shifting into P (Park) while the vehicle is in motion will cause the drive wheels to lock which will cause you to lose control of the vehicle.**
- **Do not use the P (Park) position in place of the parking brake. Always make sure the shift lever is latched in the P (Park) position and set the parking brake fully.**
- **Never leave a child unattended in a vehicle.**

⚠ CAUTION

The transaxle may be damaged if you shift into P (Park) while the vehicle is in motion.

R (Reverse)

Use this position to drive the vehicle backward.

⚠ CAUTION

Always come to a complete stop before shifting into or out of R (Reverse); you may damage the transaxle if you shift into R (Reverse) while the vehicle is in motion, except as explained in "Rocking the vehicle", in this manual.

N (Neutral)

The wheels and transaxle are not engaged. The vehicle will roll freely even on the slightest incline unless the parking brake or service brakes are applied.

⚠ WARNING

Do not drive with the shift lever in N (Neutral).
The engine brake will not work and lead to an accident.

-Parking in N (Neutral) gear

Follow below steps when parking and you want the vehicle to move when pushed.

1. After parking your vehicle, step on the brake pedal and move the shift lever to [P] with the ignition button in [ON] or while the engine is running.
2. If the parking brake is applied unlock the parking brake.
   - For EPB (Electronic Parking Brake) equipped vehicles, push the brake pedal with the ignition button in [ON] or while the engine is running to disengage the parking brake. If [AUTO HOLD] function is used while driving (If [AUTO HOLD] indicator is on in the cluster), press [AUTO HOLD] switch and [AUTO HOLD] function should be turn off.
3. While pressing the brake pedal, turn the ignition button [OFF].
   - For smart key equipped vehicles, the ignition switch can be moved to [OFF] only when the shift lever is in [P].
4. Change the gear shift lever to [N] (Neutral) while pressing the brake pedal and pushing [SHIFT LOCK RELEASE] button or inserting, pressing down a tool (e.g. flathead screw-driver) into the [SHIFT LOCK RELEASE] access hole at the same time. Then, the vehicle will move when external force is applied.

⚠ CAUTION

- **With the exception of parking in neutral gear, always park the vehicle in [P] (Park) for safety and engage the parking brake.**
- **Before parking in [N] (Neutral) gear, first make sure the parking ground is level and flat. Do not park in [N] gear on any slopes or gradients.**
  If parked and left in [N], the vehicle may move and cause serious damage and injury.
- **After the ignition switch has been turned off, the electronic parking brake cannot be disengaged.**

(Continued)

(Continued)

- **For EPB (Electronic Parking Brake) equipped vehicles with [AUTO HOLD] function used while driving, if the ignition button has been turned [OFF], the electronic parking brake will be engaged automatically. Therefore, [AUTO HOLD] function should be turned off before the ignition button is turned off.**

D (Drive)

This is the normal forward driving position. The transaxle will automatically shift through a 6-gear sequence, providing the best fuel economy and power.
For extra power when passing another vehicle or climbing grades, depress the accelerator pedal fully (more than 82%) until the kick down mechanism (if equipped) works with a clicking noise, at which time the transaxle will automatically downshift to the next lower gear.

✻ NOTICE

- Always come to a complete stop before shifting into D (Drive).
- A clicking noise heard from the kick down mechanism by depressing the accelerator pedal fully is a normal condition.

Sports mode

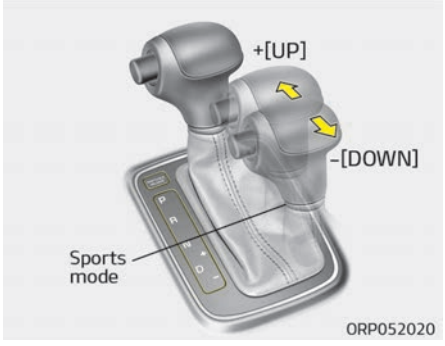

Whether the vehicle is stationary or in motion, sports mode is selected by pushing the shift lever from the D (Drive) position into the manual gate. To return to D (Drive) range operation, push the shift lever back into the main gate.
In sports mode, moving the shift lever backwards and forwards will allow you to make gearshifts rapidly.

Up (+):	Push the lever forward once to shift up one gear.
Down (-):	Pull the lever backwards once to shift down one gear.

✻ NOTICE

- In sports mode, the driver must execute upshifts in accordance with road conditions, taking care to keep the engine speed below the red zone.
- In sports mode, only the 6 forward gears can be selected. To reverse or park the vehicle, move the shift lever to the R (Reverse) or P (Park) position as required.
- In sports mode, downshifts are made automatically when the vehicle slows down. When the vehicle stops, 1st gear is automatically selected.
- In sports mode, when the engine rpm approaches the red zone shift points are varied to upshift automatically.
- To maintain the required levels of vehicle performance and safety, the system may not execute certain gearshifts when the shift lever is operated.

(Continued)

(Continued)

- When driving on a slippery road, push the shift lever forward into the +(up) position. This causes the transaxle to shift into the 2nd gear which is better for smooth driving on a slippery road. Push the shift lever to the -(down) side to shift back to the 1st gear.

Paddle shifter (if equipped)

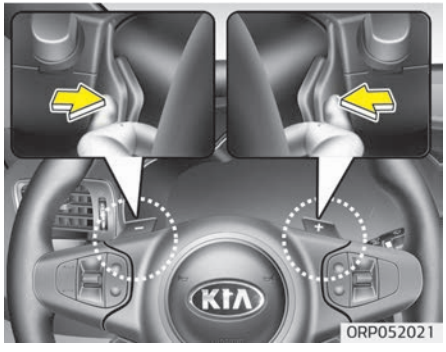

The paddle shifter is available when the shift lever is in the D position or the sports mode.

With the shift lever in the D position

The paddle shifter will operate when the vehicle speed is more than 10 km/h. Pull the [+] or [-] paddle shifter once to shift up or down one gear and the system changes from automatic mode to manual mode.
When the vehicle speed is lower than 10 km/h, if you depress the accelerator pedal for more than 5 seconds or if you shift the shift lever from D (Drive) to sports mode and shift it from sports mode to D (Drive) again, the system changes from manual mode to automatic mode.

With the shift lever in the sports mode

Pull the [+] or [-] paddle shifter once to shift up or down one gear.

✻ NOTICE

If you pull the [+] and [-] paddle shifters at the same time, you cannot shift the gear.

Shift lock system (if equipped)

For your safety, the automatic transaxle has a shift lock system which prevents shifting the transaxle from P (Park) or N (Neutral) into R (Reverse) unless the brake pedal is depressed.
To shift the transaxle from P (Park) or N (Neutral) into R (Reverse):

1. Depress and hold the brake pedal.
2. Start the engine or turn the ignition switch to the ON position.
3. Move the shift lever.

If the brake pedal is repeatedly depressed and released with the shift lever in the P (Park) position, a chattering noise near the shift lever may be heard. This is a normal condition.

⚠ WARNING

Always fully depress the brake pedal before and while shifting out of the P (Park) position into another position to avoid inadvertent motion of the vehicle which could injure persons in or around the vehicle.

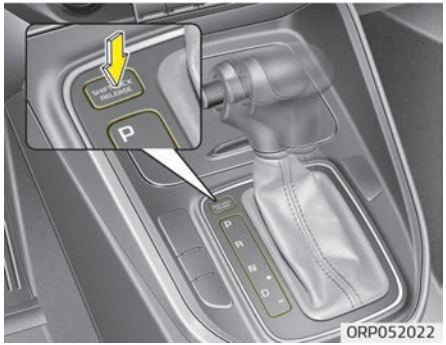

Shift-lock override

If the shift lever cannot be moved from the P (Park) or N (Neutral) position into R (Reverse) position with the brake pedal depressed, continue depressing the brake, then do the following:

1. Press the shift-lock release button.
2. Move the shift lever.
3. Have the system inspected by a professional workshop. Kia recommends to visit an authorized Kia dealer/service partner.

Ignition key interlock system (if equipped)

The ignition key cannot be removed unless the shift lever is in the P (Park) position.

Good driving practices

- Never move the shift lever from P (Park) or N (Neutral) to any other position with the accelerator pedal depressed.
- Never move the shift lever into P (Park) when the vehicle is in motion.
- Be sure the vehicle is completely stopped before you attempt to shift into R (Reverse) or D (Drive).
- Never take the vehicle out of gear and coast down a hill. This may be extremely hazardous. Always leave the vehicle in gear when moving.
- Do not "ride" the brakes. This can cause them to overheat and malfunction. Instead, when you are driving down a long hill, slow down and shift to a lower gear. When you do this, engine braking will help slow down the vehicle.
- Slow down before shifting to a lower gear. Otherwise, the lower gear may not be engaged.
- Always use the parking brake. Do not depend on placing the transaxle in P (Park) to keep the vehicle from moving.

- Exercise extreme caution when driving on a slippery surface. Be especially careful when braking, accelerating or shifting gears. On a slippery surface, an abrupt change in vehicle speed can cause the drive wheels to lose traction and the vehicle to go out of control.
- Optimum vehicle performance and economy is obtained by smoothly depressing and releasing the accelerator pedal.

⚠ WARNING

- **Always buckle-up! In a collision, an unbelted occupant is significantly more likely to be seriously injured or killed than a properly belted occupant.**
- **Avoid high speeds when cornering or turning.**
- **Do not make quick steering wheel movements, such as sharp lane changes or fast, sharp turns.**
- **The risk of rollover is greatly increased if you lose control of your vehicle at highway speeds.**

(Continued)

(Continued)

- **Loss of control often occurs if two or more wheels drop off the roadway and the driver over-steers to reenter the roadway.**
- **In the event your vehicle leaves the roadway, do not steer sharply. Instead, slow down before pulling back into the travel lanes.**
- **Never exceed posted speed limits.**

⚠ WARNING

If your vehicle becomes stuck in snow, mud, sand, etc., then you may attempt to rock the vehicle free by moving it forward and backward. Do not attempt this procedure if people or objects are anywhere near the vehicle. During the rocking operation the vehicle may suddenly move forward of backward as it becomes unstuck, causing injury or damage to nearby people or objects.

DUAL CLUTCH TRANSMISSION (DCT) (IF EQUIPPED)

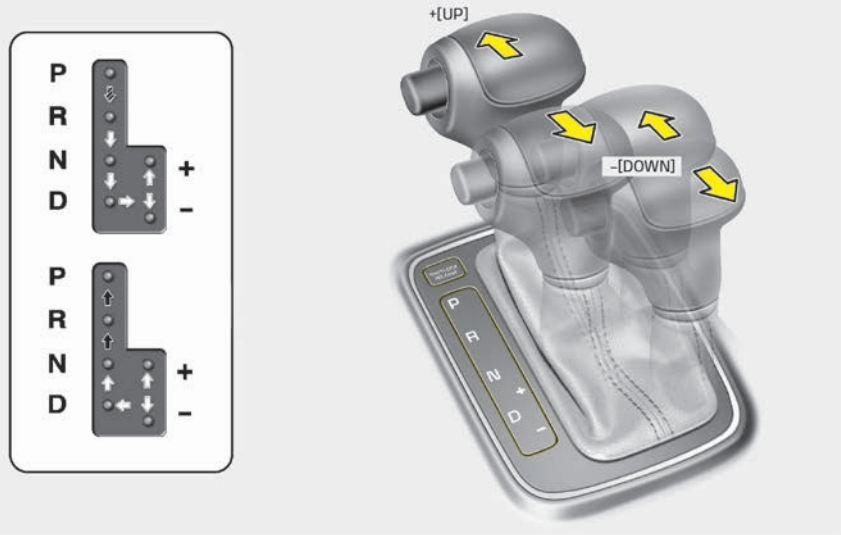

Depress the brake pedal and the lock release button when shifting.
(If the shift lock system is not equipped, it is not necessary to depress the brake pedal. However, it is recommended to depress the brake pedal to avoid inadvertent movement of the vehicle.)

Press the lock release button when shifting.

The shift lever can be shifted freely.

ORP052019

Dual clutch transmission operation

The dual clutch transmission has seven forward speeds and one reverse speed. The individual speeds are selected automatically in the D (Drive) position.

⚠ WARNING

To reduce the risk of serious injury or death:

- **ALWAYS check the surrounding areas near your vehicle for people, especially children, before shifting a vehicle into D (Drive) or R (Reverse).**
- **Before leaving the driver's seat, always make sure the shift lever is in the P (Park) position, then set the parking brake, and place the ignition switch in the LOCK/OFF position. Unexpected and sudden vehicle movement can occur if these precautions are not followed.**
- **Do not use engine braking (shifting from a high gear to lower gear) rapidly on slippery roads. The vehicle may slip causing an accident.**

- The Dual Clutch Transmission gives the driving feel of a manual transmission, yet provides the ease of a fully automatic transmission. Unlike a traditional automatic transmission, the gear shifting can be felt (and heard) on the dual clutch transmission
  - Think of it as an automatically shifting manual transmission.
  - Shift into Drive range and get fully automatic shifting, similar to a conventional automatic transmission.
- Dual clutch transmission adopts dry-type dual clutch, which is different from torque converter of automatic transmission, and shows better acceleration performance during driving. But, initial launch might be little bit slower than Automatic Transmission.
- The dry-type clutch transfers torque and provides a direct driving feeling which may feel different from a conventional automatic transmission with a torque converter. This may be more noticeable when starting from a stop or low vehicle speed.
- When rapidly accelerating at low vehicle speed, engine could rev at high rpm depending on vehicle drive condition.
- For smooth launch uphill, press down the accelerator pedal smoothly depending on the current conditions.
- If you release your foot from the accelerator pedal at low vehicle speed, you may feel strong engine brake, which is similar to manual transmission.
- When driving downhill, you may use Sports Mode and press the paddle shifters to downshift to a lower gear in order to control your speed without using the brake pedal excessively.
- When you turn the engine on and off, you may hear clicking sounds as the system goes through a self test. This is a normal sound for the Dual Clutch Transmission.

⚠ WARNING

Due to transmission failure, the vehicle may not move and the position indicator (D,R) will blink on the cluster. In this case, have the system
(Continued)

(Continued)

checked by a professional workshop. Kia recommends to visit an authorized Kia dealer/service partner.

⚠ CAUTION

- **To hold the vehicle on a hill use the foot brake or the parking brake. If the vehicle is held by applying the accelerator pedal on a hill the clutch and transmission will be overheated resulting in damage. At this time, a warning message ("Steep grade! Press brake pedal") will appear on the LCD display and you may feel a vibration.**
- **If the clutch becomes overheated by excessive use of the clutch to hold on a hill, you may notice a shudder feeling and a blinking display on the instrument cluster. When this occurs, the clutch is disabled until the clutch cools to normal temperatures. If this occurs, pull over to a safe location, shift into P (Park) and apply the foot brake for a few minutes.**

(Continued)

(Continued)

- If the LCD warning is active, the foot brake must be applied.
- Ignoring the warnings can lead to damage to the transmission.
- If the display continues to blink, for your safety, contact a professional workshop. Kia recommends to visit an authorized Kia dealer/ service partner.

(Continued)

(Continued)

- Under certain conditions such as repeated launch on steep grades, the clutch in the transmission could overheat. When the clutch is overheated, the safe protection mode engages.
  If the safe protection mode engages, the gear position indicator on the cluster blinks with a chime sound.
  At this time, a warning message ("Transmission temp. is high! Stop safely", "Trans Cooling. Remain parked for 00 min.") will appear on the LCD display and driving may not be smooth.
  If you ignore this warning, the driving condition may become worse. To return the normal driving condition, stop the vehicle and apply the foot brake for a few minutes before driving off.

(Continued)

(Continued)

- Repetitive kick downs may lead to overheating of the transmission. This will lead to change in the vehicle speed shift pattern, and illuminate some warning message.
  To return the normal driving condition, refrain from kick down speed changes. When the warning message illuminates, park the vehicle at a safe location.
- Gear shifts may be more noticeable than a conventional automatic transmission. This is a normal characteristic of this type of dual clutch transmission.
- During the first 1,500 km (1,000 miles), you may feel that the vehicle may not be smooth when accelerating at low speed. During this break-in period, the shift quality and performance of your new vehicle is continuously optimized.
- Always come to a complete stop before shifting into D (Drive) or R (Reverse).
- Do not put the shift lever in N (Neutral) while driving.

The indicator in the instrument cluster displays the shift lever position when the ignition switch is in the ON position.

P (Park)

Always come to a complete stop before shifting into P (Park).
To shift from P (Park), you must depress firmly on the brake pedal and make sure your foot is off the accelerator pedal.
The shift lever must be in P (Park) before turning the engine off.

⚠ WARNING

- **Shifting into P (Park) while the vehicle is in motion may cause you to lose control of the vehicle.**
- **After the vehicle has stopped, always make sure the shift lever is in P (Park), apply the parking brake, and turn the engine off.**
- **Do not use the P (Park) position in place of the parking brake.**

R (Reverse)

Use this position to drive the vehicle backward.

⚠ CAUTION

Always come to a complete stop before shifting into or out of R (Reverse); you may damage the transmission if you shift into R (Reverse) while the vehicle is in motion.

N (Neutral)

The wheels and transmission are not engaged.
Use N (Neutral) if you need to restart a stalled engine, or if it is necessary to stop with the engine ON. Shift into P (Park) if you need to leave your vehicle for any reason.
Always depress the brake pedal when you are shifting from N (Neutral) to another gear.

⚠ WARNING

Do not shift into gear unless your foot is firmly on the brake pedal. Shifting into gear when the engine is running at high speed can cause the vehicle to move very rapidly. You could lose control of the vehicle and hit people or objects.

⚠ WARNING

Do not drive with the shift lever in N (Neutral).
The engine brake will not work and lead to an accident.

-Parking in N (Neutral) gear

Follow below steps when parking and you want the vehicle to move when pushed.

1. After parking your vehicle, step on the brake pedal and move the shift lever to [P] with the ignition button in [ON] or while the engine is running.
2. If the parking brake is applied unlock the parking brake.
   - For EPB (Electronic Parking Brake) equipped vehicles, push the brake pedal with the ignition button in [ON] or while the engine is running to disengage the parking brake. If [AUTO HOLD] function is used while driving (If [AUTO HOLD] indicator is on in the cluster), press [AUTO HOLD] switch and [AUTO HOLD] function should be turned off.
3. While pressing the brake pedal, turn the ignition button [OFF].

- For smart key equipped vehicles, the ignition switch can be moved to [OFF] only when the shift lever is in [P].

4. Change the gear shift lever to [N] (Neutral) while pressing the brake pedal and pushing [SHIFT LOCK RELEASE] button or inserting, pressing down a tool (e.g. flathead screw-driver) into the [SHIFT LOCK RELEASE] access hole at the same time. Then, the vehicle will move when external force is applied.

⚠ CAUTION

- **With the exception of parking in neutral gear, always park the vehicle in [P] (Park) for safety and engage the parking brake.**
- **Before parking in [N] (Neutral) gear, first make sure the parking ground is level and flat. Do not park in [N] gear on any slopes or gradients.**
  If parked and left in [N], the vehicle may move and cause serious damage and injury.

(Continued)

(Continued)

- **After the ignition switch has been turned off, the electronic parking brake cannot be disengaged.**
- **For EPB (Electronic Parking Brake) equipped vehicles with [AUTO HOLD] function used while driving, if the ignition button has been turned [OFF], the electronic parking brake will be engaged automatically. Therefore, [AUTO HOLD] function should be turned off before the ignition button is turned off.**

D (Drive)

This is the normal driving position. The transmission will automatically shift through a seven-gear sequence, providing the best fuel economy and power.
For extra power when passing another vehicle or driving uphill depress the accelerator pedal further until you feel the transmission downshift to a lower gear.

Sports mode

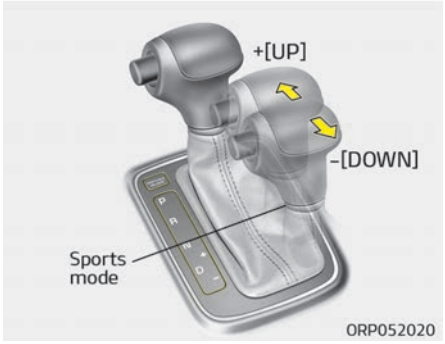

Whether the vehicle is stationary or in motion, sports mode is selected by pushing the shift lever from the D (Drive) position into the manual gate. To return to D (Drive) range operation, push the shift lever back into the main gate.
In Sports Mode, moving the shift lever backwards and forwards will allow you to select the desired range of gears for the current driving conditions.

+ (Up):	Push the lever forward once to shift up one gear.
- (Down):	Pull the lever backwards once to shift down one gear.

✻ NOTICE

- Only the seven forward gears can be selected. To reverse or park the vehicle, move the shift lever to the R (Reverse) or P (Park) position as required.
- Downshifts are made automatically when the vehicle slows down. When the vehicle stops, 1st gear is automatically selected.
- When the engine rpm approaches the red zone the transmission will upshift automatically.
- If the driver presses the lever to + (Up) or - (Down) position, the transmission may not make the requested gear change if the next gear is outside of the allowable engine rpm range. The driver must execute upshifts in accordance with road conditions, taking care to keep the engine rpms below the red zone.

Shift lock system (if equipped)

For your safety, the Dual clutch transmission has a shift lock system which prevents shifting the transaxle from P (Park) or N (Neutral) into R (Reverse) unless the brake pedal is depressed.
To shift the transaxle from P (Park) or N (Neutral) into R (Reverse):

1. Depress and hold the brake pedal.
2. Start the engine or turn the ignition switch to the ON position.
3. Move the shift lever.

If the brake pedal is repeatedly depressed and released with the shift lever in the P (Park) position, a chattering noise near the shift lever may be heard. This is a normal condition.

⚠ WARNING

Always fully depress the brake pedal before and while shifting out of the P (Park) position into another position to avoid inadvertent motion of the vehicle which could injure persons in or around the car.

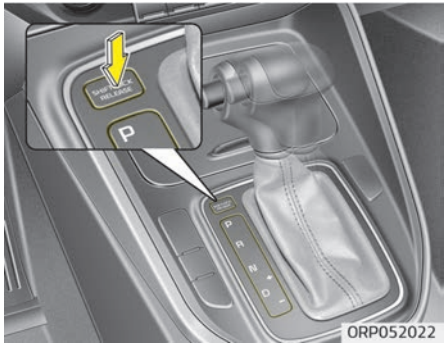

Shift-lock override

If the shift lever cannot be moved from the P (Park) or N (Neutral) position into R (Reverse) position with the brake pedal depressed, continue depressing the brake, then do the following:

1. Press the shift-lock release button.
2. Move the shift lever.
3. Have the system inspected by a professional workshop. Kia recommends to visit an authorized Kia dealer/service partner.

Ignition key interlock system (if equipped)

The ignition key cannot be removed unless the shift lever is in the P (Park) position.

Good driving practices

- Never move the shift lever from P (Park) or N (Neutral) to any other position with the accelerator pedal depressed.
- Never move the shift lever into P (Park) when the vehicle is in motion.
- Be sure the car is completely stopped before you attempt to shift into R (Reverse) or D (Drive).
- Never take the car out of gear and coast down a hill. This may be extremely hazardous. Always leave the car in gear when moving.
- Do not "ride" the brakes. This can cause them to overheat and malfunction. Instead, when you are driving down a long hill, slow down and shift to a lower gear. When you do this, engine braking will help slow the car.
- Slow down before shifting to a lower gear. Otherwise, the lower gear may not be engaged.
- Always use the parking brake. Do not depend on placing the transaxle in P (Park) to keep the car from moving.
- Exercise extreme caution when driving on a slippery surface. Be especially careful when braking, accelerating or shifting gears. On a slippery surface, an abrupt change in vehicle speed can cause the drive wheels to lose traction and the vehicle to go out of control.
- Optimum vehicle performance and economy is obtained by smoothly depressing and releasing the accelerator pedal.

⚠ WARNING

- **Always buckle-up! In a collision, an unbelted occupant is significantly more likely to be seriously injured or killed than a properly belted occupant.**
- **Avoid high speeds when cornering or turning.**
- **Do not make quick steering wheel movements, such as sharp lane changes or fast, sharp turns.**
- **The risk of rollover is greatly increased if you lose control of your vehicle at highway speeds.**

(Continued)

(Continued)

- **Loss of control often occurs if two or more wheels drop off the roadway and the driver oversteers to reenter the roadway.**
- **In the event your vehicle leaves the roadway, do not steer sharply. Instead, slow down before pulling back into the travel lanes.**
- **Never exceed posted speed limits.**

⚠ WARNING

If your vehicle becomes stuck in snow, mud, sand, etc., then you may attempt to rock the vehicle free by moving it forward and backward. Do not attempt this procedure if people or objects are anywhere near the vehicle. During the rocking operation the vehicle may suddenly move forward of backward as it becomes unstuck, causing injury or damage to nearby people or objects.

Moving up a steep grade from a standing start

To move up a steep grade from a standing start, depress the brake pedal, shift the shift lever to D (Drive). Select the appropriate gear depending on load weight and steepness of the grade, and release the parking brake. Depress the accelerator gradually while releasing the service brakes.

ACTIVE ECO SYSTEM (IF EQUIPPED)

Active ECO operation

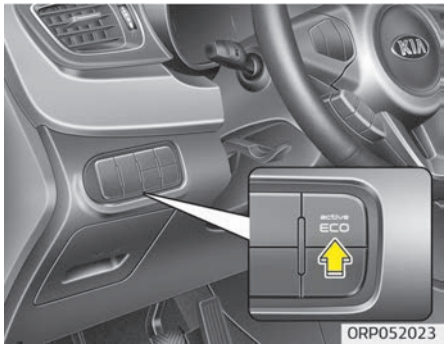

Active ECO helps improve fuel efficiency by controlling the engine and transaxle. But fuel-efficiency can be changed by the driver's driving habits and road conditions.

- When the Active ECO button is pressed the ECO indicator (green) will illuminate to show that the Active ECO is operating.
- If Active ECO is turned off, it will return to the normal mode.

When Active ECO is activated:

- The acceleration may slightly be reduced even though you depress the accelerator fully.
- The air conditioner performance may be limited.
- The shift pattern of the automatic transaxle/dual clutch transmission may change.

The above situations are normal conditions when the active eco system is activated to improve fuel efficiency.

Limitation of Active ECO operation:

If the following conditions occur while Active ECO is operating, the system operation is limited even though there is no change in the ECO indicator.

- When the coolant temperature is low: The system will be limited until engine performance becomes normal.
- When driving up a hill: The system will be limited to gain power when driving uphill because the engine torque is restricted.
- When using sports mode: The system will be limited according to the shift location.
- When the accelerator pedal is deeply pressed for a few seconds: The system will be limited, judging that the driver wants to speed up.

BRAKE SYSTEM

Power brakes

Your vehicle has power-assisted brakes that adjust automatically through normal usage.

In the event that the power-assisted brakes lose power because of a stalled engine or some other reason, you can still stop your vehicle by applying greater force to the brake pedal than you normally would. The stopping distance, however, will be longer.

When the engine is not running, the reserve brake power is partially depleted each time the brake pedal is applied. Do not pump the brake pedal when the power assist has been interrupted.

Pump the brake pedal only when necessary to maintain steering control on slippery surfaces.

⚠ WARNING

■ Brakes

(Continued)

(Continued)

- **Do not drive with your foot resting on the brake pedal. This will create abnormal high brake temperatures, excessive brake lining and pad wear, and increased stopping distances.**
- **When descending a long or steep hill, shift to a lower gear and avoid continuous application of the brakes. Continuous brake application will cause the brakes to overheat and could result in a temporary loss of braking performance.**
- **Wet brakes may impair the vehicle's ability to safely slow down; the vehicle may also pull to one side when the brakes are applied. Applying the brakes lightly will indicate whether they have been affected in this way. Always test your brakes in this fashion after driving through deep water.**
  To dry the brakes, apply them lightly while maintaining a safe forward speed until brake performance returns to normal.

(Continued)

(Continued)

- **Always, confirm the position of the brake and accelerator pedal before driving. If you don't check the position of the accelerator and brake pedal before driving, you may depress the accelerator instead of the brake pedal. It may cause a serious accident.**

In the event of brake failure

If service brakes fail to operate while the vehicle is in motion, you can make an emergency stop with the parking brake. The stopping distance, however, will be much greater than normal.

⚠ WARNING

■ Parking brake

Applying the parking brake while the vehicle is moving at normal speeds can cause a sudden loss of control of the vehicle. If you must use the parking brake to stop the vehicle, use great caution in applying the brake.

Disc brakes wear indicator

When your brake pads are worn and new pads are required, you will hear a high-pitched warning sound from your front brakes or rear brakes. You may hear this sound come and go or it may occur whenever you depress the brake pedal.
Please remember that some driving conditions or climates may cause a brake squeal when you first apply (or lightly apply) the brakes. This is normal and does not indicate a problem with your brakes.

⚠ CAUTION

- **To avoid costly brake repairs, do not continue to drive with worn brake pads.**
- **Always replace the front or rear brake pads as pairs.**

⚠ WARNING

■ Brake wear
(Continued)

(Continued)

This brake wear warning sound means your vehicle needs service. If you ignore this audible warning, you will eventually lose braking performance, which could lead to a serious accident.

Parking brake - Hand type

Applying the parking brake

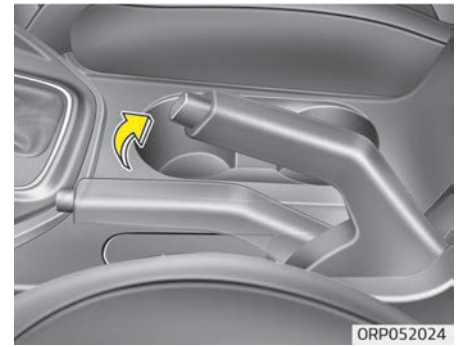

To engage the parking brake, first apply the foot brake and then without pressing the release button in, pull the parking brake lever up as far as possible. In addition it is recommended that when parking the vehicle on a gradient, the shift lever should be positioned in the appropriate low gear for manual transaxle vehicles or in the P (Park) position for automatic transaxle / dual clutch transmission vehicles.

⚠ CAUTION

- **Driving with the parking brake applied will cause excessive brake pad (or lining) and brake rotor wear.**
- **Do not operate the parking brake while the vehicle is moving except in an emergency situation. It could damage the vehicle system and make endanger driving safety.**

Releasing the parking brake

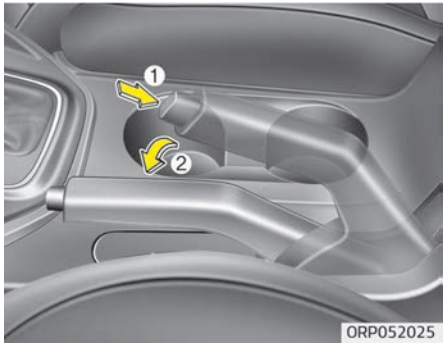

To release the parking brake, first apply the foot brake and pull up the parking brake lever slightly. Secondly press the release button (1) and lower the parking brake lever (2) while pressing the button.

⚠ WARNING

- **To prevent unintentional movement when stopped and leaving the vehicle, do not use the shift lever instead of the parking brake. Set the parking brake AND make sure the shift lever is securely positioned in 1st (First) gear or R (Reverse) for manual transaxle equipped vehicles and in P (Park) for automatic transaxle / dual clutch transmission equipped vehicles.**
- **Never allow anyone who is unfamiliar with the vehicle to touch the parking brake. If the parking brake is released unintentionally, serious injury may occur.**
- **All vehicles should always have the parking brake fully engaged when parking to avoid inadvertent movement of the vehicle which can injure occupants or pedestrians.**



Check the brake warning light by turning the ignition switch ON (do not start the engine). This light will illuminate when the parking brake is applied with the ignition switch in the START or ON position.
Before driving, be sure the parking brake is fully released and the brake warning light is off.
If the brake warning light remains on after the parking brake is released while the engine is running, there may be a malfunction in the brake system. Immediate attention is necessary.

If at all possible, cease driving the vehicle immediately. If that is not possible, use extreme caution while operating the vehicle and only continue to drive the vehicle until you can reach a safe location or repair shop.

Electronic parking brake (EPB) (if equipped)

Applying the parking brake

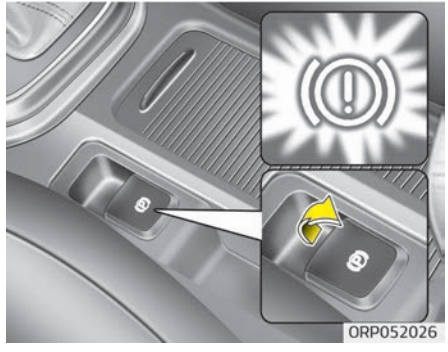

To apply the EPB (Electronic parking brake):

Pull up the EPB switch.
Make sure the warning light comes on.

✻ NOTICE

On a steep incline or when pulling a trailer if the vehicle does not stand still, do as follows:

1. Apply the EPB.
2. Pull up the EPB switch for more than 3 seconds.

⚠ CAUTION

Do not operate the parking brake while the vehicle is moving except in an emergency situation. It could damage the vehicle system and endanger driving safety.

Releasing the parking brake

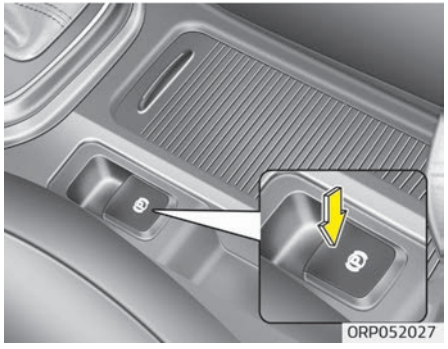

To release the EPB (Electronic parking brake), press the EPB switch in the following condition:

- Have the ignition switch or engine start/stop button in the ON position.
- Depress the brake pedal.

Make sure the brake warning light goes off.

To release EPB (Electronic parking brake) automatically:

- Manual transaxle vehicle
  1. Start the engine.
  2. Fasten the driver's seat belt.
  3. Close the driver's door, engine hood and tailgate.
  4. Depress the clutch pedal with the gear engaged.
  5. Depress the accelerator pedal while releasing the clutch pedal.
- Automatic transaxle vehicle
  1. Start the engine.
  2. Fasten the driver's seat belt.
  3. Close the driver's door, engine hood and tailgate.
  4. Depress the accelerator pedal while the shift lever is in R (Rear), D (Drive).
- Shift lever in P (Park)
  With the engine running depress the brake pedal and shift out of P (Park) to R (Rear) or D (Drive).
- Shift lever in N (Neutral)
  With the engine running depress the brake pedal and shift out of N (Neutral) to R (Rear) or D (Drive).

Make sure the brake warning light goes off.

✻ NOTICE

- For your safety, you can engage the EPB even though the ignition switch or engine stop/start button is in the OFF position, but you cannot release it.
- For your safety, depress the brake pedal and release the parking brake manually with the EPB switch when you drive downhill or when backing up the vehicle.

✻ NOTICE

■ Manual transaxle

A vehicle towing a trailer on a hill or on an incline may slightly roll backwards when starting the vehicle. To prevent the situation follow the below instructions.

1. Depress the clutch pedal and select a gear
2. Keep pulling up the EPB switch.

(Continued)

(Continued)

3. Depress the accelerator pedal and slowly release the clutch pedal.
4. If the vehicle starts off with enough driving power release the EPB switch.

Do not follow the above procedure when driving on a flat level ground. The vehicle may suddenly move forward.

⚠ CAUTION

- **If the parking brake warning light is still on even though the EPB has been released, have the system checked by a professional workshop. Kia recommends to visit an authorized Kia dealer/service partner.**
- **Do not drive your vehicle with the EPB applied. It may cause excessive brake pad and brake rotor wear.**

EPB (Electronic parking brake) may be automatically applied when:

- The EPB is overheated
- Requested by other systems
- If you try to drive off depressing the accelerator pedal with the EPB applied, but doesn't release automatically, a warning will sound and a message ("Release parking brake") will appear.
- If the driver's seat belt is not fastened and any door, the engine hood or tailgate is opened, a warning will sound and a message will appear.
- If there is a problem with the vehicle, a warning may sound and a message may appear.

If the above situation occurs, depress the brake pedal and release EPB by pressing the EPB switch.

⚠ WARNING

- **To prevent unintentional movement when stopped and leaving the vehicle, do not use the shift lever in place of the parking brake. Set the parking brake and make sure the shift lever is securely positioned in P (Park).**
- **Never allow anyone who is unfamiliar with the vehicle to touch the parking brake. If the parking brake is released unintentionally, serious injury may occur.**
- **All vehicles should always have the parking brake fully engaged when parking to avoid inadvertent movement of the car which can injure occupants or pedestrians.**

⚠ CAUTION

- **A click sound may be heard while operating or releasing the EPB, but these conditions are normal and indicate that the EPB is functioning properly.**

(Continued)

(Continued)

- **When leaving your keys with a parking lot attendant or valet, make sure to inform him/her how to operate the EPB.**
- **The EPB may malfunction if you drive with the EPB applied.**
- **When you automatically release EPB by depressing the accelerator pedal, depress it slowly.**

EPB malfunction indicator (if equipped)

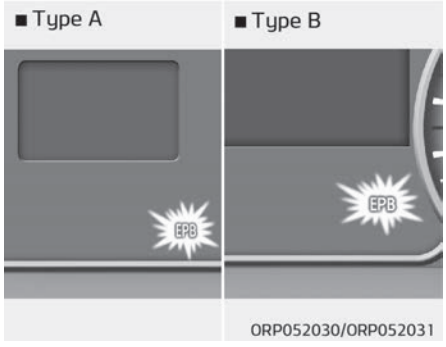

This warning light illuminates if the engine start/stop button is changed to the ON position and goes off in approximately 3 seconds if the system is operation normally.
If the EPB malfunction indicator remains on, comes on while driving, or does not come on when the ignition switch or the engine start/stop button is changed to the ON position, this indicates that the EPB may have malfunctioned.
If this occurs, have the system checked by a professional workshop. Kia recommends to visit an authorized Kia dealer/service partner.
The EPB malfunction indicator may illuminate when the ESC indicator comes on to indicate that the ESC is not working properly, but it does not indicate a malfunction of the EPB.

⚠ CAUTION

- **The EPB warning light may illuminate if the EPB switch operates abnormally. Shut the engine off and turn it on again after a few minutes. The warning light will go off and the EPB switch will operate normally. However, if the EPB warning light is still on, have the system checked by a professional workshop.**
  Kia recommends to visit an authorized Kia dealer/service partner.
- **If the parking brake warning light does not illuminate or blinks even though the EPB switch was pulled up, the EPB is not applied.**

(Continued)

(Continued)

- **If the parking brake warning light blinks when the EPB warning light is on, press the switch, then pull it up. Once more press it back to its original position and pull it back up. If the EPB warning does not go off, have the system checked by a professional workshop.**
  Kia recommends to visit an authorized Kia dealer/service partner.

Emergency braking

If there is a problem with the brake pedal while driving, emergency braking is possible by pulling up and holding the EPB switch. Braking is possible only while you are holding the EPB switch.

⚠ WARNING

Do not operate the parking brake while the vehicle is moving except in an emergency situation.

✻ NOTICE

During emergency braking by the EPB, the parking brake warning light will illuminate to indicate that the system is operating.

⚠ CAUTION

If you continuously notice a noise or burning smell when the EPB is used for emergency braking, have the system checked by a professional workshop.
Kia recommends to visit an authorized Kia dealer/service partner.

When the EPB (Electronic Parking Brake) does not release

If the EPB does not release normally, load the vehicle on a flatbed tow truck and have the system checked by a professional workshop. Kia recommends to visit an authorized Kia dealer/service partner.

Anti-lock brake system (ABS)

⚠ WARNING

ABS (or ESC) will not prevent accidents due to improper or dangerous driving maneuvers. Even though vehicle control is improved during emergency braking, always maintain a safe distance between you and objects ahead. Vehicle speeds should always be reduced during extreme road conditions.
The braking distance for vehicle equipped with an anti-lock braking system (or Electronic Stability Control) may be longer than for those without it in the following road conditions.
During these conditions the vehicle should be driven at reduced speeds:

- **Rough, gravel or snow-covered roads.**
- **With tire chains installed.**
- **On roads where the road surface is pitted or has different surface height.**

(Continued)

(Continued)

The safety features of an ABS (or ESC) equipped vehicle should not be tested by high speed driving or cornering. This could endanger the safety of yourself or others.

The ABS continuously senses the speed of the wheels. If the wheels are going to lock, the ABS system repeatedly modulates the hydraulic brake pressure to the wheels.
When you apply your brakes under conditions which may lock the wheels, you may hear a "tik-tik" sound from the brakes, or feel a corresponding sensation in the brake pedal. This is normal and it means your ABS is active.
In order to obtain the maximum benefit from your ABS in an emergency situation, do not attempt to modulate your brake pressure and do not try to pump your brakes. Press your brake pedal as hard as possible or as hard as the situation warrants and allow the ABS to control the force being delivered to the brakes.

✻ NOTICE

A click sound may be heard in the engine compartment when the vehicle begins to move after the engine is started. These conditions are normal and indicate that the anti-lock brake system is functioning properly.

- Even with the anti-lock brake system, your vehicle still requires sufficient stopping distance. Always maintain a safe distance from the vehicle in front of you.
- Always slow down when cornering. The anti-lock brake system cannot prevent accidents resulting from excessive speeds.
- On loose or uneven road surfaces, operation of the anti-lock brake system may result in a longer stopping distance than for vehicles equipped with a conventional brake system.



W-78

⚠ CAUTION

- **If the ABS warning light is on and stays on, you may have a problem with the ABS. In this case, however, your regular brakes will work normally.**

(Continued)

(Continued)

- **The ABS warning light will stay on for approximately 3 seconds after the ignition switch is ON. During that time, the ABS will go through self-diagnosis and the light will go off if everything is normal. If the light stays on, you may have a problem with your ABS. In this case, have your vehicle inspected by a professional workshop. Kia recommends to contact an authorized Kia dealer/service partner.**

⚠ CAUTION

- **When you drive on a road having poor traction, such as an icy road, and operate your brakes continuously, the ABS will be active continuously and the ABS warning light may illuminate. Pull your vehicle over to a safe place and stop the engine.**

(Continued)

(Continued)

- **Restart the engine. If the ABS warning light is off, then your ABS system is normal. Otherwise, you may have a problem with the ABS. In this case, have your vehicle inspected by a professional workshop. Kia recommends to contact an authorized Kia dealer/service partner.**

✻ NOTICE

When you jump start your vehicle because of a drained battery, the engine may not run as smoothly and the ABS warning light may turn on at the same time. This happens because of the low battery voltage. It does not mean your ABS is malfunctioning.

- Do not pump your brakes!
- Have the battery recharged before driving the vehicle.

Electronic stability control (ESC) (if equipped)

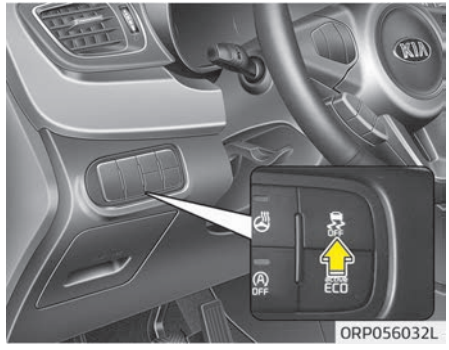

The Electronic Stability Control (ESC) system is designed to stabilize the vehicle during cornering maneuvers. ESC checks where you are steering and where the vehicle is actually going. ESC applies the brakes at individual wheels and intervenes with engine management system to stabilize the vehicle.

⚠ WARNING

Never drive too fast for the road conditions or too quickly when cornering. Electronic stability control (ESC) will not prevent accidents. Excessive speed in turns, abrupt maneuvers and hydroplaning on wet surfaces can still result in serious accidents. Only a safe and attentive driver can prevent accidents by avoiding maneuvers that cause the vehicle to lose traction. Even with ESC installed, always follow all the normal precautions for driving - including driving at safe speeds for the conditions.

The Electronic stability control (ESC) system is an electronic system designed to help the driver maintain vehicle control under adverse conditions. It is not a substitute for safe driving practices. Factors including speed, road conditions and driver steering input can all affect whether ESC will be effective in preventing a loss of control. It is still your responsibility to drive and corner at reasonable speeds and to leave a sufficient margin of safety.

When you apply your brakes under conditions which may lock the wheels, you may hear a "tik-tik" sound from the brakes, or feel a corresponding sensation in the brake pedal. This is normal and it means your ESC is active.

✻ NOTICE

A click sound may be heard in the engine compartment when the vehicle begins to move after the engine is started. These conditions are normal and indicate that the Electronic stability control (ESC) System is functioning properly.

ESC operation

ESC ON condition

-

- When the ignition is turned ON, ESC and ESC OFF indicator lights illuminate for approximately 3 seconds, then ESC is turned on.
- Press the ESC OFF button for at least half a second after turning the ignition ON to turn ESC off. (ESC OFF indicator will illuminate). To turn the ESC on, press the ESC OFF button (ESC OFF indicator light will go off).
- When starting the engine, you may hear a slight ticking sound. This is the ESC performing an automatic system self-check and does not indicate a problem.

When operating

When the ESC is in operation, ESC indicator light blinks.

- When the Electronic Stability Control is operating properly, you can feel a slight pulsation in the vehicle. This is only the effect of brake control and indicates nothing unusual.
- When moving out of the mud or slippery road, the engine rpm (revolution per minute) may not increase even if you press the accelerator pedal deeply. This is to maintain the stability and traction of the vehicle and does not indicate a problem.

ESC operation off

ESC OFF state

This car has 2 kinds of ESC off states.
If the engine stops when ESC is off, ESC remains off. Upon restarting the engine, the ESC will automatically turn on again.

- ESC off state 1
  To cancel ESC operation, press the ESC OFF button (ESC OFF) shortly (ESC OFF indicator light (ESC OFF) illuminates). At this state, the engine control function does not operate. It means the traction control function does not operate. Brake control function only operates.
- ESC off state 2
  To cancel ESC operation, press the ESC OFF button (ESC OFF) for more than 3 seconds. ESC OFF indicator light (ESC OFF) illuminates and ESC OFF warning chime will sound. At this state, the engine control function and brake control function do not operate. It means the car stability control function does not operate any more.

Indicator light

■ ESC indicator light

■ ESC OFF indicator light

OFF

When ignition switch is turned to ON, the indicator light illuminates, then goes off if the ESC system is operating normally.
The ESC indicator light blinks whenever ESC is operating or illuminates when ESC fails to operate.
ESC OFF indicator light comes on when the ESC is turned off with the button.

⚠ CAUTION

Driving with varying tire or wheel sizes may cause the ESC system to malfunction. When replacing tires,
(Continued)

(Continued)

make sure they are the same size as your original tires.

⚠ WARNING

The Electronic Stability Control system is only a driving aid; use precautions for safe driving by slowing down on curved, snowy, or icy roads. Drive slowly and don't attempt to accelerate whenever the ESC indicator light is blinking, or when the road surface is slippery.

ESC OFF usage

When driving

- ESC should be turned on for daily driving whenever possible.
- To turn ESC off while driving, press the ESC OFF button while driving on a flat road surface.

⚠ WARNING

Never press the ESC OFF button while ESC is operating (ESC indicator light blinks).
If ESC is turned off while ESC is operating, the vehicle may slip out of control.

✻ NOTICE

- When operating the vehicle on a dynamometer, ensure that the ESC is turned off by pressing the ESC OFF button for more than 3 seconds (ESC OFF light illuminated). If the ESC is left on, it may prevent the vehicle speed from increasing, and result in false diagnosis.
- Turning the ESC off does not affect ABS or brake system operation.

Vehicle Stability Management (VSM) (if equipped)

This system provides further enhancements to vehicle stability and steering responses when a vehicle is driving on a slippery road or a vehicle detected changes in coefficient of friction between right wheels and left wheels when braking.

VSM operation

When the VSM is operating:

- ESC (Electronic Stability Control) ( ) light will blink.
- The steering wheel may be controlled.

When the vehicle stability management is operating properly, you can feel a slight pulsation in the vehicle. This is only the effect of brake control and indicates nothing unusual.

The VSM does not operate when:

- Driving on bank road such as gradient or incline
- Driving rearward
- ESC OFF indicator light ( ) remains on the instrument cluster

- EPS (Electronic Power Steering) indicator light remains on the instrument cluster

VSM operation off

If you press the ESC OFF button to turn off the ESC, the VSM will also cancel and the ESC OFF indicator light ( ) illuminates.
To turn on the VSM, press the button again. The ESC OFF indicator light goes out.

Malfunction indicator

The VSM can be deactivated even if you don't cancel the VSM operation by pressing the ESC OFF button. It indicates that a malfunction has been detected somewhere in the EPS (Electronic Power Steering) system or VSM system. If the ESC indicator light ( ) or EPS warning light remains on, have the system checked by a professional workshop.
Kia recommends to visit an authorized Kia dealer/service partner.

✻ NOTICE

- The VSM is designed to function above approximately 15 km/h (9 mph) on curves.
- The VSM is designed to function above approximately 30 km/h (18 mph) when a vehicle is braking on a split-mu road. The split-mu road is made of surfaces which have different friction forces.

⚠ WARNING

- **The Vehicle Stability Management system is not a substitute for safe driving practices but a supplementary function only. It is the responsibility of the driver to always check the speed and the distance to the vehicle ahead. Always hold the steering wheel firmly while driving.**

(Continued)

(Continued)

- **Your vehicle is designed to activate according to the driver's intention, even with the VSM installed. Always follow all the normal precautions for driving at safe speeds for the conditions – including driving in inclement weather and on a slippery road.**
- **Driving with varying tire or wheel sizes may cause the VSM system to malfunction. When replacing tires, make sure they are the same size as your original tires.**

Hill-start Assist Control (HAC) (if equipped)

A vehicle has the tendency to slip back on a steep hill when it starts to go after stopping. The Hill-start Assist Control (HAC) prevents the vehicle from slipping back by operating the brakes automatically for about 1~2 seconds. The brakes are released when the accelerator pedal is depressed or after about 1~2 seconds.

⚠ WARNING

The HAC is activated only for about 1~2 seconds, so when the vehicle is starting off always depress the accelerator pedal.

✻ NOTICE

- The HAC does not operate when the transaxle shift lever is in the P (Park) or N (Neutral) position.
- The HAC activates even though the ESC is off but it does not activate when the ESC has malfunctioned.

Emergency Stop Signal (ESS) (if equipped)

The Emergency Stop Signal system alerts the driver behind by blinking the stop light when the vehicle is braked rapidly and severely.
The system is activated when:

- The vehicle suddenly stops (vehicle speed is over 55 km/h and the vehicle deceleration at greater than 7 m/s^2)
- The ABS is activating

When the vehicle speed is under 40 km/h and the ABS deactivates or the sudden stop situation is over, the stop light blinking will stop. Instead, the hazard warning flasher will turn on automatically.
The hazard warning flasher will turn off when vehicle speed is over 10 km/h after the vehicle has stopped. Also, it will turn off when the vehicle is driven at low speed for some time. You can turn it off manually by pushing the hazard warning flasher switch.

⚠ CAUTION

The Emergency Stop Signal (ESS) system will not work if the hazard warning flasher is already on.

Good braking practices

⚠ WARNING

- **Whenever you leave or park your vehicle, always set the parking brake as far as possible and fully engage the vehicle's transaxle into the P (Park) position. If the parking brake is not fully engaged, the vehicle may move inadvertently and injure yourself and others.**
- **All vehicles should always have the parking brake fully engaged when parking to avoid inadvertent movement of the vehicle which can injure occupants or pedestrians.**

- Check to be sure the parking brake is not engaged and that the parking brake indicator light is out before driving away.

- Driving through water may get the brakes wet. They can also get wet when the vehicle is washed. Wet brakes can be dangerous! Your vehicle will not stop as quickly if the brakes are wet. Wet brakes may cause the vehicle to pull to one side.
  To dry the brakes, apply the brakes lightly until the braking action returns to normal, taking care to keep the vehicle under control at all times. If the braking action does not return to normal, stop as soon as it is safe to do so and have your vehicle inspected by a professional workshop.
  Kia recommends to call an authorized Kia dealer/service partner.
- Do not coast down hills with the vehicle out of gear. This is extremely hazardous. Keep the vehicle in gear at all times, use the brakes to slow down, then shift to a lower gear so that engine braking will help you maintain a safe speed.
- Do not "ride" the brake pedal. Resting your foot on the brake pedal while driving can be dangerous because it can result in the brakes overheating and losing their effectiveness. It also increases the wear of the brake components.
- If a tire goes flat while you are driving, apply the brakes gently and keep the vehicle pointed straight ahead while you slow down. When you are moving slowly enough for it to be safe to do so, pull off the road and stop in a safe place.
- If your vehicle is equipped with an automatic transaxle / dual clutch transmission, do not let your vehicle creep forward. To avoid creeping forward, keep your foot firmly on the brake pedal when the vehicle is stopped.
- Be cautious when parking on a hill. Firmly engage the parking brake and place the shift lever in P (automatic transaxle / dual clutch transmission) or in first or reverse gear (manual transaxle). If your vehicle is facing downhill, turn the front wheels into the curb to help keep the vehicle from rolling.
  If your vehicle is facing uphill, turn the front wheels away from the curb to help keep the vehicle from rolling. If there is no curb or if it is required by other conditions to keep the vehicle from rolling, block the wheels.
- Under some conditions your parking brake can freeze in the engaged position. This is most likely to happen when there is an accumulation of snow or ice around or near the rear brakes or if the brakes are wet. If there is a risk that the parking brake may freeze, apply it only temporarily while you put the shift lever in P (automatic transaxle / dual clutch transmission) or in first or reverse gear (manual transaxle) and block the rear wheels so the vehicle cannot roll. Then release the parking brake.
- Do not hold the vehicle on the upgrade with the accelerator pedal. This can cause the transaxle to overheat. Always use the brake pedal or parking brake.

CRUISE CONTROL SYSTEM (IF EQUIPPED)

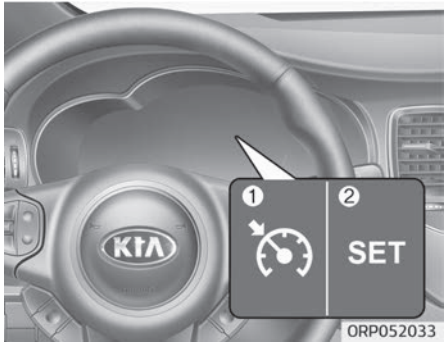

1. Cruise indicator
2. Cruise set indicator

The cruise control system allows you to program the vehicle to maintain a constant speed without pressing the accelerator pedal.
This system is designed to function above approximately 30 km/h (20 mph).

⚠ WARNING

- **If the cruise control is left on, (cruise indicator light is illuminated), the cruise control can be switched on accidentally. Keep the cruise control system off when the cruise control is not in use, to avoid inadvertently setting a speed.**
- **Use the cruise control system only when traveling on open highways in good weather.**
- **Do not use the cruise control when it may not be safe to keep the vehicle at a constant speed, for instance, driving in heavy or varying traffic, or on slippery (rainy, icy or snow-covered) or winding roads or over 6% up-hill or down-hill roads.**
- **Pay particular attention to the driving conditions whenever using the cruise control system.**
- **Be careful when driving downhill using the cruise control system, which may increase the vehicle speed.**

⚠ CAUTION

During cruise-speed driving of a manual transaxle vehicle, do not shift into neutral without depressing the clutch pedal, since the engine will be over-revved. If this happens, depress the clutch pedal or release the cruise control ON-OFF switch.

✻ NOTICE

- During normal cruise control operation, when the SET switch is activated or reactivated after applying the brakes, the cruise control will energize after approximately 3 seconds. This delay is normal.
- To activate cruise control, depress the brake pedal at least once after turning the ignition switch to the ON position or starting the engine. This is to check if the brake switch which is important part to cancel cruise control is in normal condition.

Cruise control switch



CANCEL: Cancels cruise control operation.

: Turns cruise control system on or off.

RES+: Resumes or increases cruise control speed.

SET−: Sets or decreases cruise control speed.

To set cruise control speed:



1. Press the cruise button on the steering wheel, to turn the system on. The cruise indicator light will illuminate.
2. Accelerate to the desired speed, which must be more than approximately 30 km/h (20 mph).

✻ NOTICE

■ Manual transaxle

For manual transaxle vehicles, you should depress the brake pedal at

(Continued)

(Continued)

least once to set the cruise control after starting the engine.



3. Move the lever down (to SET−), and release it at the desired speed. The cruise set indicator light will illuminate. Release the accelerator pedal at the same time. The desired speed will automatically be maintained.

   On a steep grade, the vehicle may slow down or speed up slightly while going downhill.

To increase cruise control set speed:



Follow either of these procedures:

- Move the lever up (to RES+) and hold it. Your vehicle will accelerate. Release the lever at the speed you want.
- Move the lever up (to RES+) and release it immediately. The cruising speed will increase by 2 km/h (1 mph) each time you move the lever up (to RES+) in this manner.

To decrease the cruising speed:



Follow either of these procedures:

- Move the lever down (to SET-) and hold it. Your vehicle will gradually slow down. Release the lever at the speed you want to maintain.
- Move the lever down (to SET-) and release it immediately. The cruising speed will decrease by 2 km/h (1 mph) each time you move the lever down (to SET-) in this manner.

To temporarily accelerate with the cruise control on:

If you want to speed up temporarily when the cruise control is on, depress the accelerator pedal. Increased speed will not interfere with cruise control operation or change the set speed.
To return to the set speed, take your foot off the accelerator pedal.

To cancel cruise control, do one of the following:



- Depress the brake pedal.
- Depress the clutch pedal if equipped with a manual transaxle.

- Shift into N (Neutral) if equipped with an automatic transaxle / dual clutch transmission.
- Press the CANCEL button located on the steering wheel.
- Decrease the vehicle speed lower than the memory speed by approximately 15 km/h (9 mph).
- Decrease the vehicle speed to less than approximately 25 km/h (15 mph).

Each of these actions will cancel cruise control operation (the cruise set indicator light will go off), but it will not turn the system off. If you wish to resume cruise control operation, move up the lever (to RES+) located on your steering wheel. You will return to your previously preset speed.

To resume cruising speed at more than approximately 30 km/h (20 mph):



If any method other than the button was used to cancel cruising speed and the system is still activated, the most recent set speed will automatically resume when you move the lever up (to RES+).
It will not resume, however, if the vehicle speed has dropped below approximately 30 km/h (20 mph).

To turn cruise control off, do one of the following:

- Press the cruise button (the cruise indicator light will be turn off).
- Press the speed limit button (If you press the button, the speed limit system will turn on).
- Turn the ignition off.

Both of these actions cancel cruise control operation. If you want to resume cruise control operation, repeat the steps provided in "To set cruise control speed" on page 6-57.

SPEED LIMIT CONTROL SYSTEM (IF EQUIPPED)

You can set the speed limit when you do not want to drive over a specific speed.
If you drive over the preset speed limit, the warning system operates (set speed limit will blink and chime will sound) until the vehicle speed returns within the speed limit.

✻ NOTICE

While speed limit control is in operation, the cruise control system cannot be activated.

Speed limit control switch



ORP056034L

CANCEL: Cancels set speed limit.

: Turns speed limit control system on or off.

RES+: Resumes or increases speed limit control speed.

SET−: Sets or decreases speed limit control speed.

To set speed limit:



ORP056039L

1. Press the speed limit button on the steering wheel, to turn the system on.

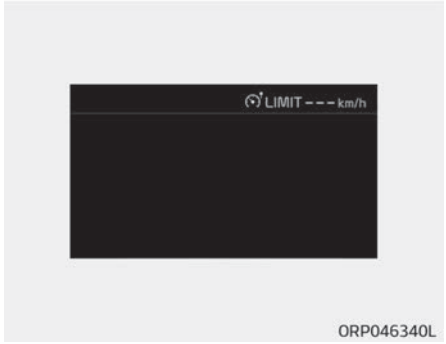

ORP046340L

The speed limit indicator light will illuminate.



ORP056040L

2. Move the lever down (to SET−).

3. Move the lever up (to RES+) or down (to SET-), and release it at the desired speed. Move the lever up (to RES+) or down (to SET-) and hold it. The speed will increase or decrease by 5 km/h (3 mph).
   Move the lever up (to RES+) or down (SET-) and release it immediately. The speed will increase or decrease by 1 km/h.

The set speed limit will display on the instrument cluster.

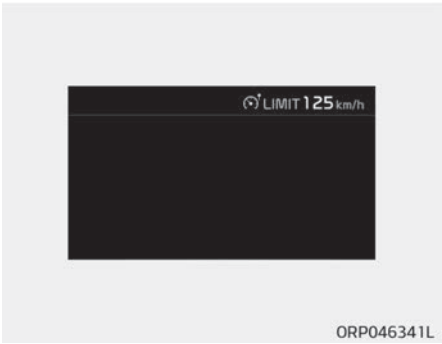

The set speed limit will be displayed.

To drive over the preset speed limit you must depress hard on the accelerator pedal (more than approximately 80%) until the kick down mechanism works with a clicking noise. Then the set speed limit will blink and chime will sound until you return the vehicle speed within the speed limit.

✻ NOTICE

- Depressing the accelerator pedal less than approximately 50%, the vehicle will not speed over the preset speed limit but maintain the vehicle speed within the speed limit.
- A clicking noise heard from the kick down mechanism by depressing the accelerator pedal fully is a normal condition.

To turn off the speed limit control, do one of the following:



- Press the speed limit switch once again.
- Press the cruise switch (If you press cruise switch, the cruise system will turn on).
- Turn the ignition off.

If you press the CANCEL switch once, the set speed limit will cancel, but it will not turn the system off. If you wish to reset the speed limit, move the lever up (to RES+) or down (to SET-) to the desired speed.

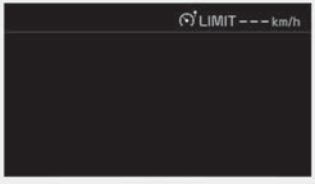

ORP046340L

⚠ CAUTION

The "---" indicator will blink if there is a problem with speed limit control system.
If this occurs, have the system checked by a professional workshop. Kia recommends to visit an authorized Kia dealer/service partner.

SPEED LIMIT INFORMATION FUNCTION (SLIF) (IF EQUIPPED)

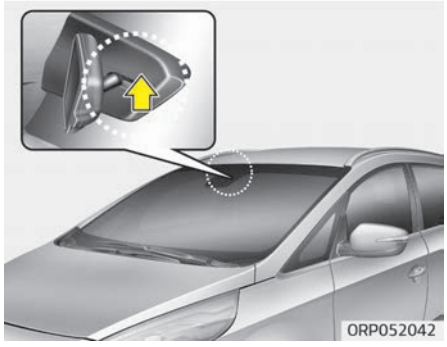

The system displays the information of speed limit and no passing restriction to the driver in both the instrument cluster and navigation screen. SLIF detects traffic signs with camera system attached on the top of the windscreen. The SLIF also utilizes the navigation information to display the speed limit information.

⚠ WARNING

- **Speed Limit Information Function is only an aid and is not always able to correctly display speed limits and overtaking restrictions.**
- **The driver always keeps the responsibility not to exceed the maximum allowed speed**
- **Do not place any accessories, stickers or tint the windshield near the rearview mirror.**
- **The system detects traffic signs and displays speed limit information by a camera therefore, if traffic signs are hard to detect, the system may not work properly. Please refer to "Driver's attention" on page 6-66.**
- **Do not remove any LKAS parts or apply impact.**
- **Do not place objects on the dashboard that reflects light such as mirrors, white paper, etc. The system may malfunction if the sunlight is reflected.**
- **The system is not available in all countries.**

SLIF activation / deactivation

- SLIF Setting method:
  Cluster User Settings ➞ Driving Assist ➞ SLIF (Speed Limit Information Function)
- The information of speed limit and no passing restriction will appear on the cluster using a symbol if you have activated SLIF in User Settings of cluster.
- If SLIF is activated in navigation setting, the information also displayed in navigation screen.

Operation

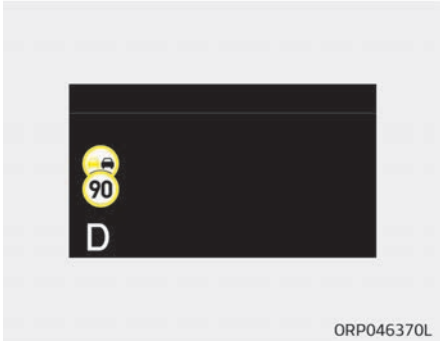

- If a traffic sign that is relevant to your vehicle is passed, the system displays the information of the speed limits and no passing restrictions to the driver.
- When the driver turns on the ignition, the system displays stored information of the speed limit before the ignition was turned off.
- Sometimes different speed limits are displayed for the same road. The information displayed depending on the situation. Because, traffic signs with additional sign (e.g rainy, arrow...) are also detected and compared with vehicle interior data (e.g wiper operation, turn signal...).
- The system can update the speed limit information without visible speed limit signs in the following situations.
  - When you change your driving direction with right or left or U turning.
  - When vehicle changes roads. (e.g. from highway to country road...)
  - When you enter or exit into town or village.

✻ NOTICE

If speed limit value has the difference between cluster and navigation, check the speed unit setting in navigation.

Display

■ No reliable speed limit information



WUM-203

- If the system doesn't have a reliable speed limit information, the following symbol is displayed in both the instrument cluster and navigation screen.

■ No passing information



WUM-206/WUM-204

- If the system detects "no passing sign", no passing is displayed in both the instrument cluster and navigation screen.

■ End of a speed limit



WUM-207/WUM-208

- After passing "end of speed limitation" sign SLIF provides information from navigation to inform driver of perhaps afterwards applicable speed limit.

■ Unlimited speed (only in Germany)



WUM-205

- For some areas on highways in Germany there's no speed limit applicable. In that case SLIF shows "end of limitation" traffic sign as long as you don't pass another speed limit sign.

Warning message

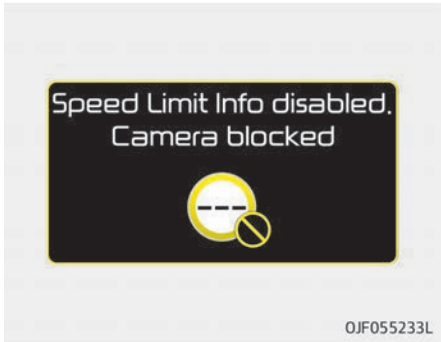

OJF055233L

The message will appear when camera's field of view is covered by some objects. The system stops until the field of view is normal.
Check the windshield around the camera view area.
If the system does not work normally even though camera's field of view is cleared, have the system checked by a professional workshop. Kia recommends to visit an authorized Kia dealer/service partner.



OJF055234L

When SLIF is not working properly, the warning message will come on for a few second. After the message disappears, the master warning light will illuminate.
In this case, have the system checked by a professional workshop.
Kia recommends to visit an authorized Kia dealer/service partner.
The system may not fully operate and provide correct information in the following situations.

- Traffic signs are positioned on sharp curve.
- Poorly positioned traffic sign. (eg. rotated, shaded by any object, damaged...)

- Concealed traffic signs by other vehicle.
- Broken LED traffic signs.
- Poor weather like snow, rain, fog
- Reflected glare around and/or on the traffic sign.
- There is insufficient illumination of the traffic signs in the night.
- There is bright lights around traffic signs.
- There is dirt, ice or frost on the windshield in the area of the camera.
- When camera field of view is covered by objects such as a sticker, paper, leaf fall.
- When driving very close to the vehicle in front of you.
- When navigation system has malfunction.
- When bus or trucks attached with a speed sticker are passing you.
- When you are at a certain location not covered by the navigation system.
- When the navigation system is not updated to the latest map version.

Driver's attention

The driver must be cautious in the below situations for the system may not assist the driver and may not work properly.

- Do not stick or attach anything to the windshield in front of the camera as this may reduce effectiveness or cause one more of the systems dependent on the camera to stop working.
- Keep the windshield in the area behind the interior rear view mirror clean.
- Do not place reflective materials, such as white paper or a mirror, on the instrument panel.
- Do not strike or damage the areas around the camera unit.
- Do not touch the camera lens or remove the screw located on the camera unit.
- The system does not work in all situations but is designed merely as a supplementary aid.
- The system assists the driver and does not replace the human eye.
- The driver always bears ultimate responsibility for ensuring that the vehicle is driven safely and that applicable road traffic rules and regulations are followed.

LANE DEPARTURE WARNING SYSTEM (LDWS) (IF EQUIPPED)

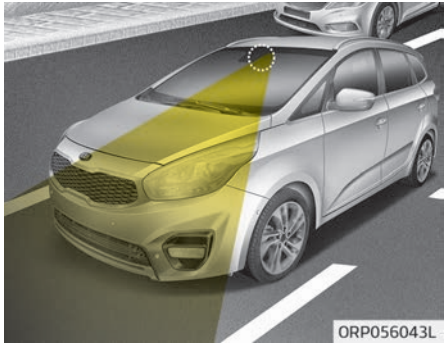

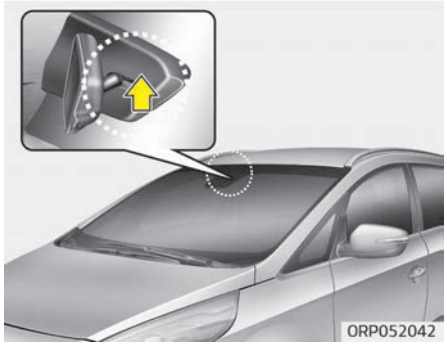

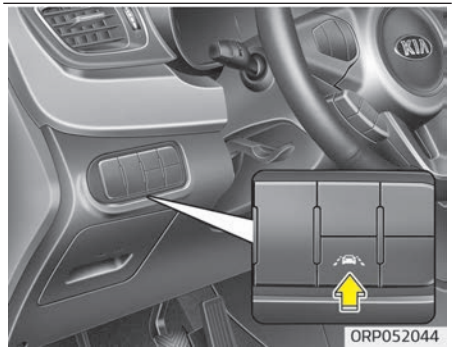

This system detects the lane with the sensor at the front windshield and warns you when your vehicle leaves the lane.

⚠ WARNING

- **The LDWS does not make the vehicle change lanes. It is the driver's responsibility to always check the road conditions.**
- **Do not turn the steering wheel suddenly, when the LDWS warns you that your vehicle is leaving the lane.**

(Continued)

(Continued)

- **If the sensor cannot detect the lane or if the vehicle speed does not exceed 60 km/h, the LDWS won't warn you even though the vehicle leaves the lane.**
- **If your vehicle has window tint or other types of coating and accessory on the front windshield, the LDWS may not work properly.**
- **Do not let water or any kind of liquid come in contact with the LDWS sensor.**
- **Do not remove the LDWS parts and do not affect the sensor by a strong impact.**
- **Do not put objects that reflect light on the dash board.**
- **Always check road conditions because you may not hear the warning chime because of audio and external conditions.**

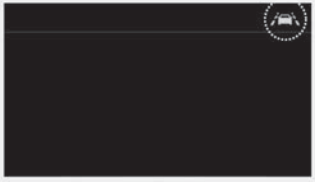

ORP046342L

To operate the LDWS, press the switch with the ignition in the ON position. The indicator illuminates on the cluster. To cancel the LDWS, press the switch again.



ORP052059

If you select this symbol, the LDWS mode on the LCD display will appear.

■ When the sensor detects the lane line



ORP046343L

■ When the sensor doesn't detect the lane line



ORP046344L

If your vehicle leaves the lane when the LDWS is operating and vehicle speed exceeds 60 km/h, the warning operates as follows:

■ Left lane departure warning

■ Right lane departure warning



ORP046345L/ORP046346L

1. Visual warning
   If you leave the lane, the lane you leave on the LCD display blinks yellow with 0.8 second of interval.
2. Auditory warning
   If you leave the lane, the warning sound operates with 0.8 second of interval.

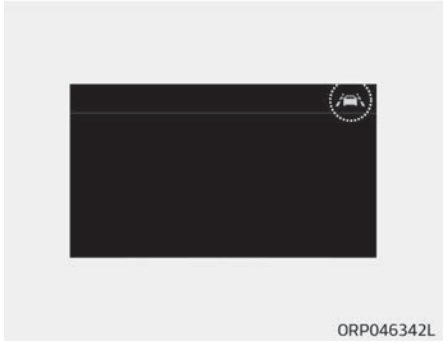

ORP046342L

The color of symbol will change depending on the condition of LDWS system.

White color:	It means the sensor does not detect the lane line.
Green color:	It means the sensor detects the lane line.

Warning indicator



ORP046347L

If the LDWS FAIL warning indicator comes on (yellow indicator), the LDWS is not working properly. In this case, have the system checked by a professional workshop. Kia recommends to visit an authorized Kia dealer/service partner.

The LDWS does not operate when:

- The driver turns on the turn signal or hazard warning flasher to change lane.
- Driving on the lane line.

✻ NOTICE

To change lane, operate the turn signal switch, then change the lane.

The LDWS may not warn you even if the vehicle leaves the lane, or may warn you even if the vehicle does not leave the lane when:

- The lane is not visible due to snow, rain, stain, a puddle or many other things.
- The brightness of the outside changes suddenly.
- Not turning on the headlight even at night or in the tunnel.
- Difficult to distinguish the color of the lane from the road.
- Driving on a steep grade or a curve.
- Light reflects from the water on the road.
- The lens or windshield is stained with foreign matter.
- The sensor can not detect the lane because of fog, heavy rain or heavy snow.
- The surrounding temperature of the inside rear view mirror is high due to a direct ray of light.
- The lane is very wide or narrow.
- The lane line is damaged or indistinct.
- The shadow is on the lane line by a median strip.
- There is a mark similar to a lane line.
- There is a boundary structure.
- The distance from vehicle ahead is very short or the vehicle ahead hides the lane line.
- The vehicle shakes heavily.
- The lane number increases or decreases or the lane lines are crossing complicatedly.
- Putting something on the dashboard.
- Driving with the sun in front of you.
- Driving in areas under construction.
- The lane line is more than two in either side (Left/Right).

BLIND SPOT DETECTION SYSTEM (BSD) (IF EQUIPPED)

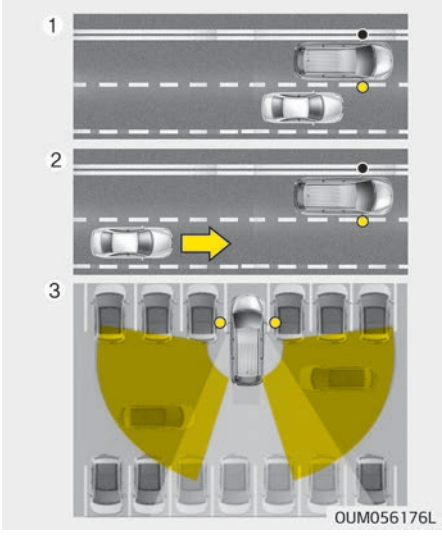

The BSD (Blind Spot Detection) system uses a radar sensor to alert the driver while driving.
It senses the rear side territory of the vehicle and provides information to the driver.

1. BSD (Blind Spot Detection)
   Warning range is dependent on your vehicle speed. However, if the speed of your vehicle is faster by 10 km/h or more than other nearby vehicles, the warning is not operated.
2. LCA (Lane Change Assist)
   When vehicles are approaching to your vehicle at high speed, the warning is operated.
3. RCTA (Rear Cross Traffic Alert)
   When your vehicle moves backward, the sensor detects approaching vehicles to the left or right side direction and warning is operated.

⚠ WARNING

- **Always check the road condition while driving for unexpected situations even though the BSD (Blind Spot Detection) system is operating.**
- **BSD (Blind Spot Detection) system is a system made for convenience. Do not solely rely on the system but always pay attention to drive safely.**

BSD (Blind Spot Detection)/LCA (Lane Change Assist)

Operating conditions

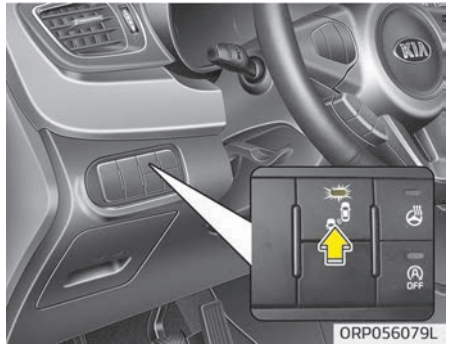

The indicator on the switch will illuminate when the BSD (Blind spot detection) system switch is pressed with the ignition switch ON. If the vehicle speed exceeds 30 km/h (18.6 mph), the system will activate.
If you press the switch again, the switch indicator and system will be turned off.
If the ignition switch is turned OFF and ON the system returns to the previous state.

When the system is not used turn the system off by pressing the switch.
When the system is turned on the warning light will illuminate for 3 seconds on the outside rearview mirror.

Warning type

The system will activate when:

1. The system is on
2. Vehicle speed is above 30 km/h (18.6 mph)
3. Other vehicles are detected in the rear side

⚠ WARNING

The Blind Spot Detection System (BSD) is not a substitute for proper and safe driving. Always drive safely and use caution when changing lanes or backing the vehicle up. The Blind Spot Detection System (BSD) may not detect every object alongside the vehicle.

■1st stage

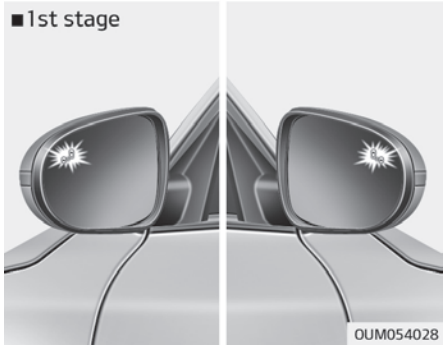

If a vehicle is detected within the boundary of the system, a warning light will illuminate on the outside rearview mirror.
If the detected vehicle is not in detection range, the warning will be turned off.

■2nd stage

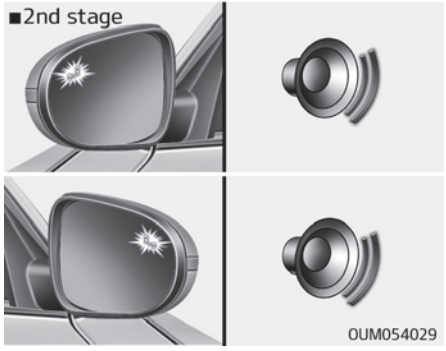

The second stage alarm will activate when:

1. The first stage alert is on
2. The turn signal is on to change a lane

When the second stage alert is activated, a warning light will be blinking on the outside rearview mirror and an alarm will sound.
If you move the turn signal switch to origin position, the second stage alert will be deactivated.
– The second stage alarm can be deactivated.

- To activate the alarm:
  Go to the User Settings Mode ➟ Sound and select "BSD" on the LCD display.
- To deactivate the alarm:
  Go to the User Settings Mode ➟ Sound and deselect "BSD" on the LCD display.

⚠ CAUTION

The alarm function helps alert the driver. Deactivate this function only when it is necessary.

Detecting sensor



The sensors are located inside the rear bumper.
Always keep the rear bumper clean for the system to work properly.

Warning message



The message will appear to notify the driver if there are foreign substances on the surface or inside the rear bumper or it is hot near the rear bumper. The light on the switch and the system will be turned off automatically.
Remove the foreign substance on the rear bumper.
After the foreign substance is removed, if you drive for approximately 10 minutes, the system will work normally.

If the system does not work normally even though the foreign substance, trailer or carrier, or other equipment is removed, take your vehicle to a professional workshop and have the system checked. Kia recommends to visit an authorized Kia dealer/service partner.
It is possible to get the message with no foreign substance on the rear bumper, for example, when driving in sparse rural or open area, such as desert, where there is insufficient data for operation.
This message may also appear during heavy rain or due to road spray and trailer.
When you use trailer or other utility, please turn off the system. If you want to use Blind Spot Detection system, please remove trailer or other utility.
In this case, the vehicle does not need service.



If the system does not work properly, a warning message will appear and the light on the switch will turn off. The system will turn off automatically.
In this case, have the system checked by a professional workshop. Kia recommends to visit an authorized Kia dealer/service partner.

RCTA (Rear Cross Traffic Alert)

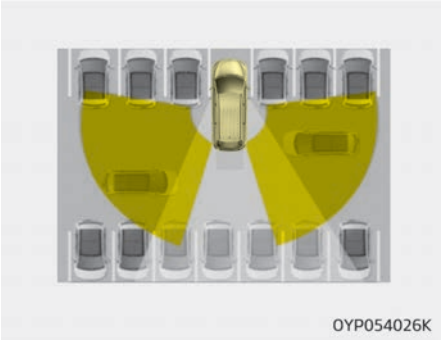

When your vehicle moves backwards from a parking position, the sensor detects approaching vehicles to the left or right side direction and gives information to the driver.

Operating conditions

- Select “Driving Assist” under "User Settings” and click “Rear Collision Warning” to select “Rear Cross Traffic Alert” on the instrument cluster. Then, the system will turn on and stand by to be activated.
- Unclick “Rear Cross Traffic Alert” again, to turn the system off.

- If the vehicle is turned off and on again, the Rear Cross Traffic Alert system will return to the state right before the vehicle was turned off. Turn the Rear Cross Traffic Alert system off when not in use.
- The system is operated when the vehicle speed is below 10 km/h with the shift lever in R (Reverse).
- The RCTA (Rear Cross Traffic Alert) detection range is 0.5 m~20 m based on side direction. If an approaching vehicle speed is 4 km/h~36 km/h in detection range, The warning is on. However, the system sensing range is different based on conditions. Always pay attention to surrounding.

Warning type

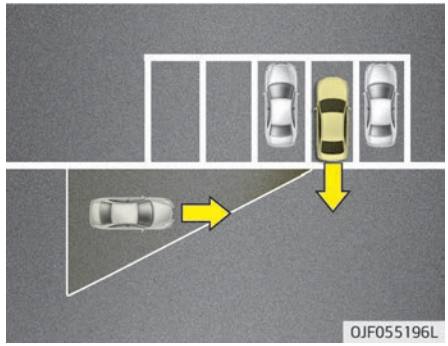
OJF055196L

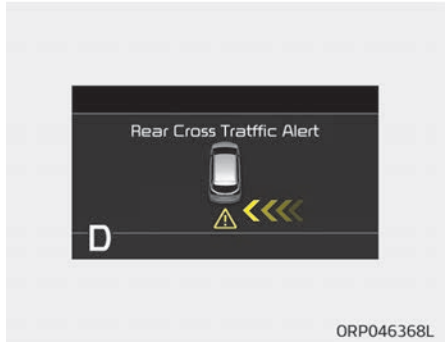

ORP046368L



ORP046369L

- If an approaching vehicle is detected by the sensors, the system will notify the driver with a chiming sound and a warning light will blink on the outside rearview mirror. The system will notify the driver through LCD.
- If the detected vehicle is out of detection range, moving away in the opposite direction or moving slow, the warning is cancelled.
- The system may not be operating properly due to other factors or circumstances, so always pay attention to your surrounding.

❋ If the bumper on either side is blocked by a barrier or vehicles, the

system sensing ability may be deteriorated.

⚠ WARNING

- **The warning light on the outside rearview mirror will illuminate whenever a vehicle is detected at the rear side by the system.**
  To avoid accidents, do not focus only on the warning light and neglect to see the surrounding of the vehicle.
- **Drive safely even though the vehicle is equipped with a BSD (Blind spot detection) system. Do not solely rely on the system but check for yourself before changing lanes.**
  The system may not alert the driver in some conditions so always check the surroundings while driving.

⚠ CAUTION

- **The system may not work properly if the bumper has been replaced or if a repair work has been done near the sensor.**
- **The detection area differs according to the roads width. If the road is narrow the system may detect other vehicles in the second next lane.**
- **On the contrary, if the road is very wide the system may not detect other vehicles in the next lane.**
- **The system might be turned off due to strong electromagnetic waves.**

Non-operating condition

Outside rearview mirror may not alert the driver when:

- The outside rearview mirror housing is damaged or covered with debris.
- The window is covered with debris.
- The windows are severely tinted.

Driver's attention

The driver must be cautious in the below situations, because the system may not detect other vehicles or objects in certain circumstances.

- The vehicle drives on a curved road or through a tollgate.
- The sensor is polluted with rain, snow, mud, etc.
- The rear bumper, in which the sensor is located, is covered or blocked with a foreign matter such as a sticker, a bumper guard, a bicycle stand, etc.
- The rear bumper is damaged, or the sensor is out of the original default position.
- The vehicle height gets lower or higher due to heavy loading in a trunk, abnormal tire pressure, etc.
- The vehicle drives in bad weather such as heavy rain or snow.
- There is a fixed object near the vehicle, such as a pedestrian, animal, guardrail or tunnel.
- There is an unusual metal component on or near the road (e.g. in a subway construction area).
- A big vehicle is near such as a bus or truck.

- A motorcycle or bicycle is near.
- A flat trailer is near.
- If the vehicle has started at the same time as the vehicle next to you and has accelerated.
- When the other vehicle passes at a very fast speed.
- While changing lanes.
- When going down or up a steep, uneven road.
- When the other vehicle approaches very close.
- When a trailer or carrier is installed.
- When the temperature of the rear bumper is very high or low.
- When the sensors are blocked by other vehicles, walls or parking-lot pillars.
- When the detected vehicle also moves back, as your vehicle drives back.
- There is a small object nearby, like pedestrian, shopping cart or baby carriage.
- There is low vehicle like sports vehicle nearby.
- When other vehicles are close to your vehicle.
- When the vehicle in the next lane moves two lanes away from you OR when the vehicle two lanes away moves to the next lane from you.
- When driving through a narrow road with many plants.
- When driving on wet surface.

ECONOMICAL OPERATION

Your vehicle's fuel economy depends mainly on your style of driving, where you drive and when you drive.
Each of these factors affects how many kilometers (miles) you can get from a liter (gallon) of fuel. To operate your vehicle as economically as possible, use the following driving suggestions to help save money in both fuel and repairs:

- Drive smoothly. Accelerate at a moderate rate. Do not make "jackrabbit" starts or full-throttle shifts and maintain a steady cruising speed. Do not race between stoplights. Try to adjust your speed to the traffic so you do not have to change speeds unnecessarily. Avoid heavy traffic whenever possible. Always maintain a safe distance from other vehicles so you can avoid unnecessary braking. This also reduces brake wear.
- Drive at a moderate speed. The faster you drive, the more fuel your vehicle uses. Driving at a moderate speed, especially on the highway, is one of the most effective ways to reduce fuel consumption.
- Do not "ride" the brake or clutch pedal. This can increase fuel consumption and also increase wear on these components. In addition, driving with your foot resting on the brake pedal may cause the brakes to overheat, which reduces their effectiveness and may lead to more serious consequences.
- Take care of your tires. Keep them inflated to the recommended pressure. Incorrect inflation, either too much or too little, results in unnecessary tire wear. Check the tire pressures at least once a month.
- Be sure that the wheels are aligned correctly. Improper alignment can result from hitting curbs or driving too fast over irregular surfaces. Poor alignment causes faster tire wear and may also result in other problems as well as greater fuel consumption.
- Keep your vehicle in good condition. For better fuel economy and reduced maintenance costs, maintain your vehicle in accordance with the maintenance schedule. If you drive your vehicle in severe conditions, more frequent maintenance is required.
- Keep your vehicle clean. For maximum service, your vehicle should be kept clean and free of corrosive materials. It is especially important that mud, dirt, ice, etc. not be allowed to accumulate on the underside of the vehicle. This extra weight can result in increased fuel consumption and also contribute to corrosion.
- Travel lightly. Do not carry unnecessary weight in your vehicle. Weight reduces fuel economy.
- Do not let the engine idle longer than necessary. If you are waiting (and not in traffic), turn off your engine and restart only when you're ready to go.
- Remember, your vehicle does not require extended warm-up. After the engine has started, allow the engine to run for 10 to 20 seconds prior to placing the vehicle in gear. In very cold weather, however, give your engine a slightly longer warm-up period.
- Do not "lug" or "over-rev" the engine. Lugging is driving too slowly in too high a gear resulting engine bucking. If this happens, shift to a lower gear. Over-revving is racing the engine beyond its safe limit. This can be avoided by shifting at the recommended speeds.

- Use your air conditioning sparingly. The air conditioning system is operated by engine power so your fuel economy is reduced when you use it.
- Open windows at high speeds can reduce fuel economy.
- Fuel economy is less in crosswinds and headwinds. To help offset some of this loss, slow down when driving in these conditions.

Keeping a vehicle in good operating condition is important both for economy and safety. Therefore, have the system serviced by a professional workshop.
Kia recommends to visit an authorized Kia dealer/service partner.

⚠ WARNING

■ Engine off during motion

Never turn the engine off to coast down hills or anytime the vehicle is in motion. The power steering and power brakes will not function properly without the engine running. Instead, keep the engine on and down-

(Continued)

(Continued)

shift to an appropriate gear for engine braking effect. In addition, turning off the ignition while driving could engage the steering wheel lock (if equipped) resulting in loss of vehicle steering which could cause serious injury or death.

SPECIAL DRIVING CONDITIONS

Hazardous driving conditions

When hazardous driving conditions are encountered such as water, snow, ice, mud, sand, or similar hazards, follow these suggestions:

- Drive cautiously and allow extra distance for braking.
- Avoid sudden braking or steering.
- When braking with non-ABS brakes pump the brake pedal with a light up-and-down motion until the vehicle is stopped.

⚠ WARNING

■ ABS

Do not pump the brake pedal on a vehicle equipped with ABS.

- If stalled in snow, mud, or sand, use second gear. Accelerate slowly to avoid spinning the drive wheels.
- Use sand, rock salt, tire chains, or other non-slip material under the drive wheels to provide traction when stalled in ice, snow, or mud.

⚠ WARNING

■ Downshifting

Downshifting with an automatic transaxle / dual clutch transmission, while driving on slippery surfaces can cause an accident. The sudden change in tire speed could cause the tires to skid. Be careful when downshifting on slippery surfaces.

Rocking the vehicle

If it is necessary to rock the vehicle to free it from snow, sand, or mud, first turn the steering wheel right and left to clear the area around your front wheels. Then, shift back and forth between 1 (First) and R (Reverse) in vehicles equipped with a manual transaxle or R (Reverse) and any forward gear in vehicles equipped with an automatic transaxle / dual clutch transmission. Do not race the engine, and spin the wheels as little as possible. If you are still stuck after a few tries, have the vehicle pulled out by a tow vehicle to avoid engine overheating and possible damage to the transaxle.

⚠ CAUTION

Prolonged rocking may cause engine over-heating, transaxle damage or failure, and tire damage.

⚠ WARNING

■ Spinning tires

Do not spin the wheels, especially at speeds more than 56 km/h (35 mph). Spinning the wheels at high speeds when the vehicle is stationary could cause a tire to overheat which could result in tire damage that may injure bystanders.

✻ NOTICE

The ESC system should be turned OFF prior to rocking the vehicle.

⚠ WARNING

If your vehicle becomes stuck in snow, mud, sand, etc., then you may attempt to rock the vehicle free by moving it forward and backward. Do not attempt this procedure if people or objects are anywhere near the vehicle. During the rocking operation the vehicle may suddenly move forward or backward as it becomes unstuck, causing injury or damage to nearby people or objects.

Smooth cornering

Avoid braking or gear changing in corners, especially when roads are wet. Ideally, corners should always be taken under gentle acceleration. If you follow these suggestions, tire wear will be held to a minimum.

Driving at night

Because night driving presents more hazards than driving in the daylight, here are some important tips to remember:

- Slow down and keep more distance between you and other vehicles, as it may be more difficult to see at night, especially in areas where there may not be any street lights.
- Adjust your mirrors to reduce the glare from other driver's headlights.
- Keep your headlights clean and properly aimed on vehicles not equipped with the automatic headlight aiming feature. Dirty or improperly aimed headlights will make it much more difficult to see at night.
- Avoid staring directly at the headlights of oncoming vehicles. You could be temporarily blinded, and it will take several seconds for your eyes to readjust to the darkness.

Driving in the rain

Rain and wet roads can make driving dangerous, especially if you're not prepared for the slick pavement. Here are a few things to consider when driving in the rain:

- A heavy rainfall will make it harder to see and will increase the distance needed to stop your vehicle, so slow down.
- Keep your windshield wiping equipment in good shape. Replace your windshield wiper blades when they show signs of streaking or missing areas on the windshield.
- If your tires are not in good condition, making a quick stop on wet pavement can cause a skid and possibly lead to an accident. Be sure your tires are in good shape.
- Turn on your headlights to make it easier for others to see you.
- Driving too fast through large puddles can affect your brakes. If you must go through puddles, try to drive through them slowly.
- If you believe you may have gotten your brakes wet, apply them lightly while driving until normal braking operation returns.

Driving in flooded areas

Avoid driving through flooded areas unless you are sure the water is no higher than the bottom of the wheel hub. Drive through any water slowly. Allow adequate stopping distance because brake performance may be affected.
After driving through water, dry the brakes by gently applying them several times while the vehicle is moving slowly.

Driving off-road

Drive carefully off-road because your vehicle may be damaged by rocks or roots of trees. Become familiar with the off-road conditions where you are going to drive before you begin driving.

Highway driving

Tires

Adjust the tire inflation pressures to specification. Low tire inflation pressures will result in overheating and possible failure of the tires.
Avoid using worn or damaged tires which may result in reduced traction or tire failure.

✻ NOTICE

Never exceed the maximum tire inflation pressure shown on the tires.

⚠ WARNING

- **Underinflated or overinflated tires can cause poor handling, loss of vehicle control, and sudden tire failure leading to accidents, injuries, and even death. Always check the tires for proper inflation before driving. For proper tire pressures, refer to "Tires and wheels" on page 9-09.**
- **Driving on tires with no or insufficient tread is dangerous. Worn-out tires can result in loss of vehicle control, collisions, injury, and even death. Worn-out tires should be replaced as soon as possible and should never be used for driving. Always check the tire tread before driving your vehicle. For further information and tread limits, refer to "Tires and wheels" on page 8-56.**

Fuel, engine coolant and engine oil

High speed travel consumes more fuel than urban motoring. Do not forget to check both engine coolant and engine oil.

Drive belt

A loose or damaged drive belt may result in overheating of the engine.

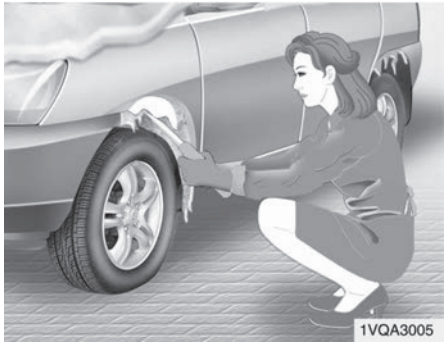

Severe weather conditions in the winter result in greater wear and other problems. To minimize the problems of winter driving, you should follow these suggestions:

❊ Snow tires and tire chains for the national language (Icelandic, Bulgarian) see Chapter 10, Appendix.

Snowy or icy conditions

To drive your vehicle in deep snow, it may be necessary to use snow tires or to install tire chains on your tires. If snow tires are needed, it is necessary to select tires equivalent in size and type of the original equipment tires. Failure to do so may adversely affect the safety and handling of your vehicle. Furthermore, speeding, rapid acceleration, sudden brake applications, and sharp turns are potentially very hazardous practices.

During deceleration, use engine braking to the fullest extent. Sudden brake applications on snowy or icy roads may cause skids to occur. You need to keep sufficient distance between the vehicle in operation in front and your vehicle. Also, apply the brake gently. It should be noted that installing tire chains on the tire will provide a greater driving force, but will not prevent side skids.

❊ NOTICE

Tire chains are not legal in all countries. Check the country laws before fitting tire chains.

Snow tires

If you mount snow tires on your vehicle, make sure they are radial tires of the same size and load range as the original tires. Mount snow tires on all four wheels to balance your vehicle's handling in all weather conditions. Keep in mind that the traction provided by snow tires on dry roads may not be as high as your vehicle's original equipment tires. You should drive cautiously even when the roads are clear. Check with the tire dealer for maximum speed recommendations.

⚠ WARNING

■ Snow tire size

Snow tires should be equivalent in size and type to the vehicle's standard tires. Otherwise, the safety and handling of your vehicle may be adversely affected.

Do not install studded tires without first checking local, state and municipal regulations for possible restrictions against their use.

Tire chains



Since the sidewalls of radial tires are thinner, they can be damaged by mounting some types of snow chains on them. Therefore, the use of snow tires is recommended instead of snow chains. Do not mount tire chains on vehicles equipped with aluminum wheels; snow chains may cause damage to the wheels. If snow chains must be used, use wire-type chains with a thickness of less than 15 mm (0.59 in). Damage to your vehicle caused by improper snow chain use is not covered by your vehicle manufacturers warranty.
Install tire chains only on the front tires.

⚠ CAUTION

- **Make sure the snow chains are the correct size and type for your tires. Incorrect snow chains can cause damage to the vehicle body and suspension and may not be covered by your vehicle manufacturer warranty. Also, the snow chain connecting hooks may be damaged from contacting vehicle components causing the snow chains to come loose from the tire. Make sure the snow chains are SAE class "S" certified.**
- **Always check chain installation for proper mounting after driving approximately 0.5 to 1 km (0.3 to 0.6 miles) to ensure safe mounting. Retighten or remount the chains if they are loose.**
- **If your vehicle has 225/45R18 size tires do not use tire chain; they can damage your vehicle (wheel, suspension and body).**

Chain installation

When installing chains, follow the manufacturer's instructions and mount them as tightly as you can. Drive slowly with chains installed. If you hear the chains contacting the body or chassis, stop and tighten them. If they still make contact, slow down until it stops. Remove the chains as soon as you begin driving on cleared roads.

⚠ WARNING

■ Mounting chains

When mounting snow chains, park the vehicle on level ground away from traffic. Turn on the vehicle Hazard Warning flashers and place a triangular emergency warning device behind the vehicle if available. Always place the vehicle in P (Park), apply the parking brake and turn off the engine before installing snow chains.

⚠ WARNING

■ Tire chains

- **The use of chains may adversely affect vehicle handling.**
- **Do not exceed 30 km/h (20 mph) or the chain manufacturer's recommended speed limit, whichever is lower.**
- **Drive carefully and avoid bumps, holes, sharp turns, and other road hazards, which may cause the vehicle to bounce.**
- **Avoid sharp turns or locked-wheel braking.**

⚠ CAUTION

- **Chains that are the wrong size or improperly installed can damage your vehicle's brake lines, suspension, body and wheels.**
- **Stop driving and retighten the chains any time you hear them hitting the vehicle.**

Use high quality ethylene glycol coolant

Your vehicle is delivered with high quality ethylene glycol coolant in the cooling system. It is the only type of coolant that should be used because it helps prevent corrosion in the cooling system, lubricates the water pump and prevents freezing. Be sure to replace or replenish your coolant in accordance with the maintenance schedule. Before winter, have your coolant tested to assure that its freezing point is sufficient for the temperatures anticipated during the winter.

Check battery and cables

Winter puts additional burdens on the battery system. Visually inspect the battery and cables as described in "Battery" on page 8-52. Have the level of charge in your battery checked by a professional workshop. Kia recommends to visit an authorized Kia dealer/service partner.

Change to "winter weight" oil if necessary

In some climates it is recommended that a lower viscosity "winter weight" oil be used during cold weather. See "Recommendations" on page 9-13. If you aren't sure what weight oil you should use, Kia recommends to consult an authorized Kia dealer/service partner.

Check spark plugs and ignition system

Inspect your spark plugs as described on page 8-33 and replace them if necessary. Also check all ignition wiring and components to be sure they are not cracked, worn or damaged in any way.

To keep locks from freezing

To keep the locks from freezing, squirt an approved de-icer fluid or glycerine into the key opening. If a lock is covered with ice, squirt it with an approved de-icing fluid to remove the ice. If the lock is frozen internally, you may be able to thaw it out by using a heated key. Handle the heated key with care to avoid injury.

Use approved window washer anti-freeze in system

To keep the water in the window washer system from freezing, add an approved window washer anti-freeze solution in accordance with instructions on the container. Window washer anti-freeze is available from an authorized Kia dealer/service partner and most auto parts outlets. Do not use engine coolant or other types of anti-freeze as these may damage the paint finish.

Don't let your parking brake freeze

Under some conditions your parking brake can freeze in the engaged position. This is most likely to happen when there is an accumulation of snow or ice around or near the rear brakes or if the brakes are wet. If there is a risk the parking brake may freeze, apply it only temporarily while you put the shift lever in P (automatic transaxle / dual clutch transmission) or in first or reverse gear (manual transaxle) and block the rear wheels so the vehicle cannot roll. Then release the parking brake.

Don't let ice and snow accumulate underneath

Under some conditions, snow and ice can build up under the fenders and interfere with the steering. When driving in severe winter conditions where this may happen, you should periodically check underneath the vehicle to be sure the movement of the front wheels and the steering components is not obstructed.

Carry emergency equipment

Depending on the severity of the weather, you should carry appropriate emergency equipment. Some of the items you may want to carry include tire chains, tow straps or chains, flashlight, emergency flares, sand, shovel, jumper cables, window scraper, gloves, ground cloth, coveralls, blanket, etc.

TRAILER TOWING

If you are considering towing with your vehicle, you should first check with your country's Department of Motor Vehicles to determine their legal requirements.
Since laws vary the requirements for towing trailers, cars, or other types of vehicles or apparatus may differ. Kia recommends to ask an authorized Kia dealer/service partner.

⚠ WARNING

■ Towing a trailer

If you don't use the correct equipment and/or drive improperly, you can lose control when you pull a trailer. For example, if the trailer is too heavy, the brakes may not work well - or even at all. You and your passengers could be seriously or fatally injured. Pull a trailer only if you have followed all the steps in this section.

⚠ WARNING

■ Weight limits

Before towing, make sure the total trailer weight, GCW (gross combination weight), GVW (gross vehicle weight), GAW (gross axle weight) and trailer tongue load are all within the limits.

⚠ WARNING

When you tow the trailer, make sure that you turn off the ISG function.

✻ NOTICE

■ For Europe

(Continued)

(Continued)

- The technically permissible maximum load on the rear axle(s) may be exceeded by not more than 15% and the technically permissible maximum laden mass of the vehicle may be exceeded by not more than 10 % or 100 kg (220.4 lbs), whichever value is lower. In this case, do not exceed 100 km/h (62.1 mph) for vehicle of category M1 or 80 km/h (49.7 mph) for vehicle of category N1.
- When towing a trailer, the additional load imposed at the trailer coupling device may cause the rear tire maximum load ratings to be exceeded, but not by more than 15%. In such a case, do not exceed 100 km/h, and the rear tire pressure should be at least 20 kPa (0.2 bar) above the tire pressure(s) as recommended for normal use (i.e. without a trailer attached).

⚠ CAUTION

Pulling a trailer improperly can damage your vehicle and result in costly repairs not covered by your warranty. To pull a trailer correctly, follow the advice in this section.

Your vehicle can tow a trailer. To identify what the vehicle trailering capacity is for your vehicle, you should read the information in "Weight of the trailer" on page 6-93.
Remember that trailering is different than just driving your vehicle by itself. Trailering means changes in handling, durability, and fuel economy. Successful, safe trailering requires correct equipment, and it has to be used properly.
This section contains many time-tested, important trailering tips and safety rules. Many of these are important for your safety and that of your passengers. Please read this section carefully before you pull a trailer.

Load-pulling components such as the engine, transaxle, wheel assemblies, and tires are forced to work harder against the load of the added weight. The engine is required to operate at relatively higher speeds and under greater loads. This additional burden generates extra heat. The trailer also considerably adds wind resistance, increasing the pulling requirements.

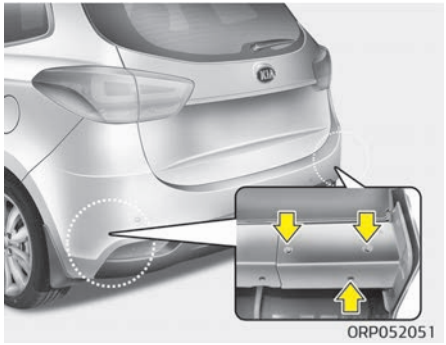
ORP052051

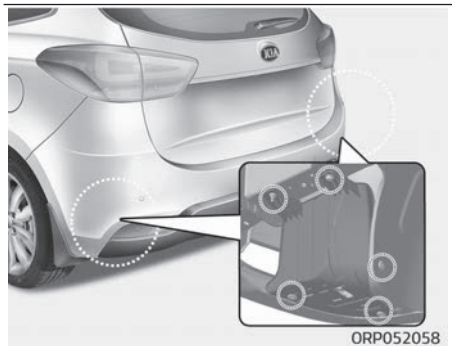
ORP052058

✻ NOTICE

■ Location of trailer mounting

- The mounting hole for hitches are located on both sides of the underbody behind the rear tires.
- Remove the under cover on the rear bumper before installing a trailer hitch.

Hitches

It's important to have the correct hitch equipment. Crosswinds, large trucks going by, and rough roads are a few reasons why you'll need the right hitch. Here are some rules to follow:

- Do you have to make any holes in the body of your vehicle when you install a trailer hitch? If you do, then be sure to seal the holes later when you remove the hitch.
- The bumpers on your vehicle are not intended for hitches. Do not attach rental hitches or other bumper-type hitches to them. Use only a frame-mounted hitch that does not attach to the bumper.
- Kia trailer hitch accessary is available at an authorized Kia dealer/service partner.

Safety chains

You should always attach chains between your vehicle and your trailer. Cross the safety chains under the tongue of the trailer so that the tongue will not drop to the road if it becomes separated from the hitch.
Instructions about safety chains may be provided by the hitch manufacturer or by the trailer manufacturer. Follow the manufacturer's recommendation for attaching safety chains. Always leave just enough slack so you can turn with your trailer. And, never allow safety chains to drag on the ground.

Trailer brakes

If your trailer is equipped with a braking system, make sure it conforms to your country's regulations and that it is properly installed and operating correctly.
If your trailer weight exceeds the maximum allowed weight without trailer brakes, then the trailer will also require its own brakes as well. Be sure to read and follow the instructions for the trailer brakes so you'll be able to install, adjust and maintain them properly.
- Do not tap into or modify your vehicle's brake system.

⚠ WARNING

■ Trailer brakes

Do not use a trailer with its own brakes unless you are absolutely certain that you have properly set up the brake system. This is not a task for amateurs. Use an experienced, competent trailer shop for this work.

Loading the trailer

The weight distribution between the car and trailer should be balanced. Make sure that the load in the trailer is equally distributed and it is not front-heavy or tail-heavy.
The heavy load in the trailer should be placed above the axle or as close as possible to the axle. And, secure loads properly on the trailer.

Tire pressure

Follow the trailer manufacturer's tire pressure recommendations for the trailer tires.

When towing, inflate tires in vehicle to the maximum permissible pressure referring to the tire pressure label.

Driving with a trailer

Towing a trailer requires a certain amount of experience. Before setting out for the open road, you must get to know your trailer. Acquaint yourself with the feel of handling and braking with the added weight of the trailer. And always keep in mind that the vehicle you are driving is now a good deal longer and not nearly so responsive as your vehicle is by itself.

Before you start, check the trailer hitch and platform, safety chains, electrical connector(s), lights, tires and mirror adjustment. If the trailer has electric brakes, start your vehicle and trailer moving and then apply the trailer brake controller by hand to be sure the brakes are working. This lets you check your electrical connection at the same time.

During your trip, check occasionally to be sure that the load is secure, and that the lights and any trailer brakes are still working.

Following distance

Stay at least twice as far behind the vehicle ahead as you would when driving your vehicle without a trailer. This can help you avoid situations that require heavy braking and sudden turns.

Passing

You'll need more passing distance up ahead when you're towing a trailer. And, because of the increased vehicle length, you'll need to go much farther beyond the passed vehicle before you can return to your lane.

Backing up

Hold the bottom of the steering wheel with one hand. Then, to move the trailer to the left, just move your hand to the left. To move the trailer to the right, move your hand to the right. Always back up slowly and, if possible, have someone guide you.

Making turns

When you're turning with a trailer, make wider turns than normal. Do this so your trailer won't strike soft shoulders, curbs, road signs, trees, or other objects. Avoid jerky or sudden maneuvers. Signal well in advance.

Turn signals when towing a trailer

When you tow a trailer, your vehicle has to have a different turn signal flasher and extra wiring. The green arrows on your instrument panel will flash whenever you signal a turn or lane change. Properly connected, the trailer lights will also flash to alert other drivers you're about to turn, change lanes, or stop.

When towing a trailer, the green arrows on your instrument panel will flash for turns even if the bulbs on the trailer are burned out. Thus, you may think drivers behind you are seeing your signals when, in fact, they are not. It is important to check occasionally to be sure the trailer bulbs are still working. You must also check the lights every time you disconnect and then reconnect the wires.

Do not connect a trailer lighting system directly to your vehicle's lighting system. Use only an approved trailer wiring harness.

Have yourself assisted by a professional workshop in installing the wiring harness.

Kia recommends to visit an authorized Kia dealer/service partner.

⚠ WARNING

Failure to use an approved trailer wiring harness could result in damage to the vehicle electrical system and/or personal injury.

Driving on grades

Reduce speed and shift to a lower gear before you start down a long or steep downgrade. If you don't shift down, you might have to use your brakes so much that they would get hot and no longer operate efficiently.

On a long uphill grade, shift down and reduce your speed to around 70 km/h (45 mph) to reduce the possibility of engine and transaxle overheating.

If your trailer weighs more than the maximum trailer weight without trailer brakes and you have an automatic transaxle / dual clutch transmission, you should drive in D (Drive) when towing a trailer.

Operating your vehicle in D (Drive) when towing a trailer will minimize heat build up and extend the life of your transaxle.

⚠ CAUTION

- **When towing a trailer on steep grades (in excess of 6%) pay close attention to the engine coolant temperature gauge to ensure the engine does not overheat.**
  If the needle of the coolant temperature gauge moves across the dial towards "130/H (HOT)", pull over and stop as soon as it is safe to do so, and allow the engine to idle until it cools down. You may proceed once the engine has cooled sufficiently.
- **You must decide driving speed depending on trailer weight and uphill grade to reduce the possibility of engine and transaxle overheating.**

⚠ CAUTION

■ For dual clutch transmission

When towing a trailer on steep grades, the clutch in the transmission could overheat.

(Continued)

(Continued)

When the clutch is overheated, the safe protection mode engages. If the safe protection mode engages, the gear position indicator on the cluster blinks with a chime sound.
At this time, a warning message will appear on the LCD display and driving may not be smooth.
If you ignore this warning, the driving condition may become worse.
To return the normal driving condition, stop the vehicle on flat road and apply the foot brake for a few minutes before driving off.

Parking on hills

Generally, if you have a trailer attached to your vehicle, you should not park your vehicle on a hill. People can be seriously or fatally injured, and both your vehicle and the trailer can be damaged if unexpectedly roll down hill.

⚠ WARNING

■ Parking on a hill

(Continued)

(Continued)

Parking your vehicle on a hill with a trailer attached could cause serious injury or death, should the trailer break loose.

However, if you ever have to park your trailer on a hill, here is how to do it:

1. Pull the vehicle into the parking space. Turn the steering wheel in the direction of the curb (right if headed down hill, left if headed up hill).
2. If the vehicle has a manual transaxle / dual clutch transmission, place the car in neutral. If the vehicle has an automatic transaxle, place the car in P (Park).
3. Set the parking brake and shut off the vehicle.
4. Place chocks under the trailer wheels on the down hill side of the wheels.
5. Start the vehicle, hold the brakes, shift to neutral, release the parking brake and slowly release the brakes until the trailer chocks absorb the load.
6. Reapply the brakes, reapply the parking brake and shift the vehicle to R (Reverse) for manual transaxle or P (Park) for automatic transaxle / dual clutch transmission.
7. Shut off the vehicle and release the vehicle brakes but leave the parking brake set.

⚠ WARNING

■ Parking brake

It can be dangerous to get out of your vehicle if the parking brake is not firmly set.
If you have left the engine running, the vehicle can move suddenly. You or others could be seriously or fatally injured.

When you are ready to leave after parking on a hill

1. With the manual transaxle in Neutral or automatic transaxle / dual clutch transmission in P (Park), apply your brakes and hold the brake pedal down while you:
   - Start your engine;
   - Shift into gear; and
   - Release the parking brake.
2. Slowly remove your foot from the brake pedal.
3. Drive slowly until the trailer is clear of the chocks.
4. Stop and have someone pick up and store the chocks.

Maintenance when trailer towing

Your vehicle will need service more often when you regularly pull a trailer. Important items to pay particular attention to include engine oil, transmission fluid, axle lubricant and cooling system fluid. Brake condition is another important item to frequently check. Each item is covered in this manual, and the Index will help you find them quickly. If you're trailering, it is a good idea to review these sections before you start your trip.
Do not forget to also maintain your trailer and hitch. Follow the maintenance schedule that accompanied your trailer and check it periodically. Preferably, conduct the check at the start of each day's driving. Most importantly, all hitch nuts and bolts should be tight.

⚠ CAUTION

- **Due to higher load during trailer usage, overheating might occur in hot days or during uphill driving. If the coolant gauge indicates overheating, switch off the air conditioner and stop the vehicle in a safe area to cool down the engine.**
- **When towing check transaxle fluid more frequently.**
- **If your vehicle is not equipped with an air conditioner, you should install a condenser fan to improve engine performance when towing a trailer.**

If you do decide to pull a trailer

Here are some important points if you decide to pull a trailer:

- Consider using a sway control. You can ask a hitch dealer about sway control.
- Do not do any towing with your car during its first 2,000 km (1,200 miles) in order to allow the engine to properly break in. Failure to heed this caution may result in serious engine or transaxle damage.
- When towing a trailer, Kia recommends that you consult an authorized Kia dealer/service partner on additional requirements such as a towing kit, etc.
- Always drive your vehicle at a moderate speed (less than 100 km/h (60 mph)).
- On a long uphill grade, do not exceed 70 km/h (45 mph) or the posted towing speed limit, whichever is lower.
- The chart contains important considerations that have to do with weight:

Weight of the trailer

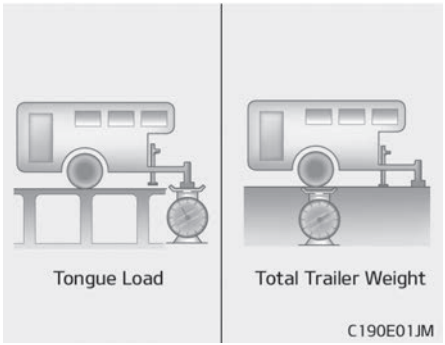

What is the maximum safe weight of a trailer? It should never weigh more than the maximum trailer weight with trailer brakes. But even that can be too heavy.
It depends on how you plan to use your trailer. For example, speed, altitude, road grades, outside temperature and how often your vehicle is used to pull a trailer are all important. The ideal trailer weight can also depend on any special equipment that you have on your vehicle.

Weight of the trailer tongue

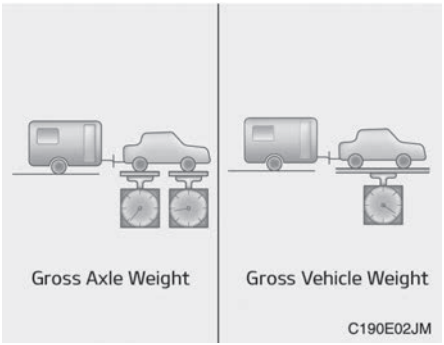

The tongue load of any trailer is an important weight to measure because it affects the total gross vehicle weight (GVW) of your vehicle. This weight includes the curb weight of the vehicle, any cargo you may carry in it, and the people who will be riding in the vehicle. And if you will tow a trailer, you must add the tongue load to the GVW because your vehicle will also be carrying that weight.

The trailer tongue should weigh a maximum of 10% of the total loaded trailer weight, within the limits of the maximum permissible trailer tongue load. After you've loaded your trailer, weigh the trailer and then the tongue, separately, to see if the weights are proper. If they aren't, you may be able to correct them simply by moving some items around in the trailer.

⚠ WARNING

■ Trailer

- **Never load a trailer with more weight in the rear than in the front. The front should be loaded with approximately 60% of the total trailer load; the rear should be loaded with approximately 40% of the total trailer load.**

(Continued)

(Continued)

- **Never exceed the maximum weight limits of the trailer or trailer towing equipment. Improper loading can result in damage to your vehicle and/or personal injury. Check weights and loading at a commercial scale or highway patrol office equipped with scales.**
- **An improperly loaded trailer can cause loss of vehicle control.**

✻ NOTICE

With increasing altitude the engine performance decreases. From 1,000 m above sea level and for every 1,000 m thereafter 10% of vehicle/trailer weight (trailer weighter + gross vehicle weight) must be deducted.

Loading capacity of the trailer towing (for Europe)

Engine			Gasoline						Diesel			
			1.6L GDI		2.0L MPI		2.0L GDI		1.7L (High)		1.7L (Low)	
Item			5-seater	7-seater	5-seater	7-seater	5-seater	7-seater	5-seater	7-seater	5-seater	7-seater
Maximum trailer weight kg (lbs.)	Without brake system	M/T	710 (1565)	730 (1609)	730 (1609)	740 (1631)	730 (1609)	750 (1653)	750 (1653)	750 (1653)	750 (1653)	750 (1653)
		A/T	-	-	740 (1631)	750 (1653)	740 (1631)	750 (1653)	-	-	-	-
		DCT	-	-	-	-	-	-	750 (1653)	750 (1653)	-	-
	With brake system	M/T	1300 (2866)	1300 (2866)	1500 (3307)	1500 (3307)	1500 (3307)	1500 (3307)	1500 (3307)	1500 (3307)	1500 (3307)	1500 (3307)
		A/T	-	-	1500 (3307)	1500 (3307)	1500 (3307)	1500 (3307)	-	-	-	-
		DCT	-	-	-	-	-	-	1500 (3307)	1500 (3307)	-	-
Maximum permissible static vertical load on the coupling device kg (lbs.)			75 (165)									

Engine	Gasoline						Diesel			
	1.6L GDI		2.0L MPI		2.0L GDI		1.7L (High)		1.7L (Low)	
Item	5-seater	7-seater	5-seater	7-seater	5-seater	7-seater	5-seater	7-seater	5-seater	7-seater
Recommended distance from rear wheel center to coupling point mm (inch)	911 (35.9)									

M/T: Manual transaxle

A/T: Automatic transaxle
DCT: Dual Clutch Transmission

VEHICLE WEIGHT

This section will guide you in the proper loading of your vehicle and/or trailer, to keep your loaded vehicle weight within its design rating capability, with or without a trailer. Properly loading your vehicle will provide maximum return of the vehicle design performance. Before loading your vehicle, familiarize yourself with the following terms for determining your vehicle's weight ratings, with or without a trailer, from the vehicle's specifications and the certification label:

Base curb weight

This is the weight of the vehicle including a full tank of fuel and all standard equipment. It does not include passengers, cargo, or optional equipment.

Vehicle curb weight

This is the weight of your new vehicle when you picked it up from your dealer plus any aftermarket equipment.

Cargo weight

This figure includes all weight added to the Base Curb Weight, including cargo and optional equipment.

GAW (Gross axle weight)

This is the total weight placed on each axle (front and rear) - including vehicle curb weight and all payload.

GAWR (Gross axle weight rating)

This is the maximum allowable weight that can be carried by a single axle (front or rear). These numbers are shown on the certification label.
The total load on each axle must never exceed its GAWR.

GVW (Gross vehicle weight)

This is the Base Curb Weight plus actual Cargo Weight plus passengers.

GVWR (Gross vehicle weight rating)

This is the maximum allowable weight of the fully loaded vehicle (including all options, equipment, passengers and cargo). The GVWR is shown on the certification label.

Overloading

⚠ WARNING

■ Vehicle weight

The gross axle weight rating (GAWR) and the gross vehicle weight rating (GVWR) for your vehicle are on the certification label attached to the driver's (or front passenger's) door. Exceeding these ratings can cause an accident or vehicle damage. You can calculate the weight of your load by weighing the items (and people) before putting them in the vehicle. Be careful not to overload your vehicle.

What to do in an emergency

Road warning..... 7-02
Hazard warning flasher..... 7-02
In case of an emergency while driving..... 7-03
If the engine stalls at a crossroad or crossing..... 7-03
If you have a flat tire while driving..... 7-03
If engine stalls while driving..... 7-03
If the engine does not start..... 7-04
If engine doesn't turn over or turns over slowly..... 7-04
If engine turns over normally but does not start..... 7-04
Emergency starting..... 7-05
Jump starting..... 7-05
Push-starting..... 7-07
If the engine overheats..... 7-08
Tire Pressure Monitoring System (TPMS) 7-09
Low tire pressure telltale..... 7-10
TPMS (Tire Pressure Monitoring System) malfunction indicator..... 7-11
Changing a tire with TPMS..... 7-12
If you have a flat tire (with spare tire)..... 7-14
Jack and tools..... 7-14
Removing and storing the spare tire..... 7-15
Changing tires..... 7-16
Jack label..... 7-21
EC Declaration of Conformity for Jack..... 7-22
If you have a flat tire (with Tire Mobility Kit)..... 7-23
Introduction..... 7-23
Components of the Tire Mobility Kit (TMK)..... 7-25
Using the Tire Mobility Kit (TMK)..... 7-26
Distributing the sealant..... 7-27
Checking the tire inflation pressure..... 7-28
Notes on the safe use of the Tire Mobility Kit..... 7-28
Technical data..... 7-29
Towing..... 7-30
Towing service..... 7-30
Removable towing hook..... 7-31
Emergency towing..... 7-32
Emergency commodity 7-35
Fire extinguisher..... 7-35
Triangle reflector..... 7-35

ROAD WARNING

Hazard warning flasher

■ Type A

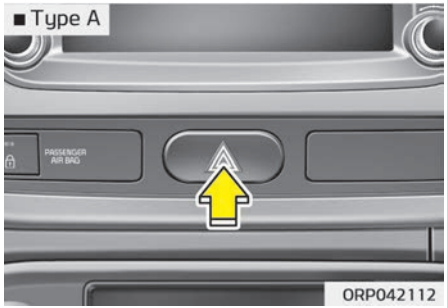

ORP042112

■ Type B

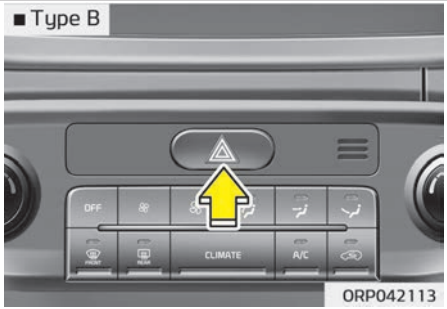

ORP042113

The hazard warning flasher serves as a warning to other drivers to exercise extreme caution when approaching, overtaking, or passing your vehicle.

It should be used whenever emergency repairs are being made or when the vehicle is stopped near the edge of a roadway.
Press the flasher switch with the ignition switch in any position. The flasher switch is located in the center facia switch panel. All turn signal lights will flash simultaneously.

- The hazard warning flasher operates whether your vehicle is running or not.
- The turn signals do not work when the hazard flasher is on.
- The hazard warning flasher should always be on while the vehicle is being towed.

IN CASE OF AN EMERGENCY WHILE DRIVING

If the engine stalls at a crossroad or crossing

- If the engine stalls at a crossroad or crossing, set the shift lever in the N (Neutral) position and then push the vehicle to a safe place.
- If your vehicle has a manual transaxle not equipped with a ignition lock switch, the vehicle can move forward by shifting to the 2 (Second) or 3 (Third) gear and then turning the starter without depressing the clutch pedal.

If you have a flat tire while driving

If a tire goes flat while you are driving:

1. Take your foot off the accelerator pedal and let the vehicle slow down while driving straight ahead. Do not apply the brakes immediately or attempt to pull off the road as this may cause a loss of control. When the vehicle has slowed to such a speed that it is safe to do so, brake carefully and pull off the road.
   Drive off the road as far as possible and park on firm, level ground. If you are on a divided highway, do not park in the median area between the two traffic lanes.
2. When the vehicle is stopped, turn on your emergency hazard flashers, set the parking brake and put the transaxle in P (automatic transaxle/ dual clutch transmission) or reverse (manual transaxle).
3. Have all passengers get out of the vehicle. Be sure they all get out on the side of the vehicle that is away from traffic.
4. When changing a flat tire, follow the instructions provided in "If you have a flat tire (with spare tire)" on page 7-14 or "If you have a flat tire (with Tire Mobility Kit)" on page 7-23.

If engine stalls while driving

1. Reduce your speed gradually, keeping a straight line. Move cautiously off the road to a safe place.
2. Turn on your emergency flashers.
3. Try to start the engine again. If your vehicle does not start, consult a professional workshop. Kia recommends to consult an authorized Kia dealer/service partner.

IF THE ENGINE DOES NOT START

If engine doesn't turn over or turns over slowly

1. If your vehicle has an automatic transaxle/dual clutch transmission, be sure the shift lever is in N (Neutral) or P (Park) and the emergency brake is set.
2. Check the battery connections to be sure they are clean and tight.
3. Turn on the interior light. If the light dims or goes out when you operate the starter, the battery is discharged.
4. Check the starter connections to be sure they are securely tightened.
5. Do not push or pull the vehicle to start it. See instructions for "Jump starting" on page 7-05.

⚠ WARNING

If the engine does not start, do not push or pull the vehicle to start it. This could result in a collision or cause other damage. In addition, push or pull starting may cause the
(Continued)

(Continued)

catalytic converter (if equipped) to be overloaded and create a fire hazard.

If engine turns over normally but does not start

1. Check fuel level.
2. With the ignition switch in the LOCK/ OFF position, check all connectors at ignition, coil and spark plugs. Reconnect any that may be disconnected or loose.
3. Check the fuel line in the engine compartment.
4. If the engine still does not start, call a professional workshop. Kia recommends to call an authorized Kia dealer/service partner.

EMERGENCY STARTING

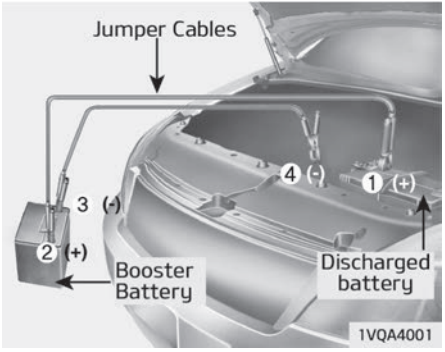

Connect cables in numerical order and disconnect in reverse order.

Jump starting

Jump starting can be dangerous if done incorrectly. Therefore, to avoid harm to yourself or damage to your vehicle or battery, follow the jump starting procedures. If in doubt, we strongly recommend that you have a competent technician or towing service jump start your vehicle.

⚠ CAUTION

Use only a 12-volt jumper system. You can damage a 12-volt starting motor, ignition system, and other electrical parts beyond repair by use of a 24-volt power supply (either two 12-volt batteries in series or a 24-volt motor generator set).

⚠ WARNING

■ Battery

Never attempt to check the electrolyte level of the battery as this may cause the battery to rupture or explode causing serious injury.

⚠ WARNING

■ Battery

(Continued)

(Continued)

- **Keep all flames or sparks away from the battery. The battery produces hydrogen gas which may explode if exposed to flame or sparks.**
  If these instructions are not followed exactly, serious personal injury and damage to the vehicle may occur! If you are not sure how to follow this procedure, seek qualified assistance. Automobile batteries contain sulfuric acid. This is poisonous and highly corrosive. When jump starting, wear protective glasses and be careful not to get acid on yourself, your clothing or on the vehicle.
- **Do not attempt to jump start the vehicle if the discharged battery is frozen or if the electrolyte level is low; the battery may rupture or explode.**
- **Do not allow the (+) and (-) jumper cables to touch. It may cause sparks.**
- **The battery may rupture or explode when you jump start with a low or frozen battery.**

Jump starting procedure

⚠ CAUTION

■ AGM battery (if equipped)

- **Absorbent Glass Matt (AGM) batteries are maintenance free and have the AGM battery serviced by a professional workshop. Kia recommends to visit an authorized Kia dealer/service partner. For charging your AGM battery, use only fully automatic battery chargers that are specially developed for AGM batteries.**
- **When replacing the AGM battery, use parts for replacement from a professional workshop. Kia recommends to visit an authorized Kia dealer/service partner.**
- **Do not open or remove the cap on top of the battery. This may cause leaks of internal electrolyte that could result in severe injury.**

(Continued)

(Continued)

- **If the AGM battery is reconnected or replaced, ISG function will not operate immediately.**
  If you want to use the ISG function, the battery sensor needs to be calibrated for approximately 4 hours with the ignition off.

✻ NOTICE

If the battery is discharged, the engine can be started using a battery of another vehicle and two jumper cables. Only use jumper cables with fully insulated clamp handles.
To prevent personal injury or damage to both vehicles, adhere strictly to the following procedure.

1. Make sure the booster battery is 12-volt and that its negative terminal is grounded.
2. If the booster battery is in another vehicle, do not allow the vehicles to touch.
3. Turn off all unnecessary electrical loads.
4. Connect the jumper cables in the exact sequence shown in the illustration. First connect one end of a jumper cable to the positive terminal of the discharged battery (1), then connect the other end to the positive terminal on the booster battery (2). Proceed to connect one end of the other jumper cable to the negative terminal of the booster battery (3), then the other end to a solid, stationary, metallic point (for example, the engine lifting bracket) away from the battery (4). Do not connect it to or near any part that moves when the engine is cranked. Make sure that there is no contact between the bodywork of the two vehicles; otherwise, there is the danger of short circuits.
   Do not allow the jumper cables to contact anything except the correct battery terminals or the correct ground. Do not lean over the battery when making connections.

⚠ CAUTION

■ Battery cables

Do not connect the jumper cable from the negative terminal of the booster battery to the negative terminal of the discharged battery. This can cause the discharged battery to overheat and crack, releasing battery acid. Make sure to connect one end of the jumper cable to the negative terminal of the booster battery, and the other end to a metallic point, far away from the battery.

5. Start the engine of the vehicle with the booster battery and let it run at 2,000 rpm, then start the engine of the vehicle with the discharged battery. If the first starting attempt is not successful, wait a few minutes before making another attempt in order to allow the discharged battery to recharge.

If the cause of your battery discharging is not apparent, have the system checked by a professional workshop. Kia recommends to visit an authorized Kia dealer/service partner.

Push-starting

Your manual transaxle-equipped vehicle should not be push-started because it might damage the emission control system. Vehicles equipped with automatic transaxle/ dual clutch transmission cannot be push-started. Follow the directions in "Jump starting" on page 7-05.

⚠ WARNING

Never tow a vehicle to start it because the sudden surge forward when the engine starts could cause a collision with the tow vehicle.

IF THE ENGINE OVERHEATS

If your temperature gauge indicates overheating, you will experience a loss of power, or hear loud pinging or knocking, the engine is probably too hot. If this happens, you should:

1. Pull off the road and stop as soon as it is safe to do so.
2. Place the shift lever in P (automatic transaxle/ dual clutch transmission) or neutral (manual transaxle) and set the parking brake. If the air conditioning is on, turn it off.
3. If engine coolant is running out under the vehicle or steam is coming out from the hood, stop the engine. Do not open the hood until the coolant has stopped running or the steaming has stopped. If there is no visible loss of engine coolant and no steam, leave the engine running and check to be sure the engine cooling fan is operating. If the fan is not running, turn the engine off.
4. Check to see if the water pump drive belt is missing. If it is not missing, check to see that it is tight.
   If the drive belt seems to be satisfactory, check for coolant leaking from the radiator, hoses or under the vehicle. (If the air conditioning had been in use, it is normal for cold water to be draining from it when you stop).

⚠ WARNING

While the engine is running, keep hair, hands and clothing away from moving parts such as the fan and drive belts to prevent injury.

5. If the water pump drive belt is broken or engine coolant is leaking out, stop the engine immediately and call a professional workshop. Kia recommends to call an authorized Kia dealer/service partner.

⚠ WARNING

Do not remove the radiator cap when the engine is hot. This can allow coolant to blow out of the opening and cause serious burns.

6. If you cannot find the cause of the overheating, wait until the engine temperature has returned to normal. Then, if coolant has been lost, carefully add coolant to the reservoir to bring the fluid level in the reservoir up to the halfway mark.
7. Proceed with caution, keeping alert for further signs of overheating. If overheating happens again, call a professional workshop. Kia recommends to call an authorized Kia dealer/service partner.

⚠ CAUTION

- **Serious loss of coolant indicates there is a leak in the cooling system. In this case, have the system checked by a professional workshop. Kia recommends to visit an authorized Kia dealer/ service partner.**
- **When the engine overheats from low engine coolant, suddenly adding engine coolant may cause cracks in the engine. To prevent damage, add engine coolant slowly in small quantities.**

TIRE PRESSURE MONITORING SYSTEM (TPMS) (IF EQUIPPED)

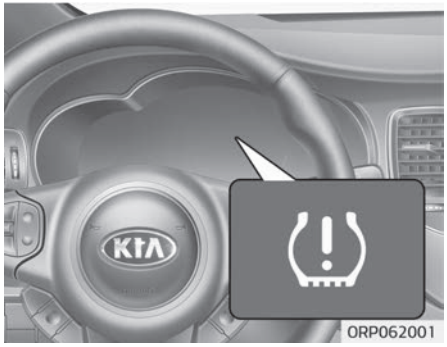

Low tire pressure telltale/TPMS malfunction indicator

Each tire, including the spare (if provided), should be checked monthly when cold and inflated to the inflation pressure recommended by the vehicle manufacturer on the vehicle placard or tire inflation pressure label.
(If your vehicle has tires of a different size than the size indicated on the vehicle placard or tire inflation pressure label, you should determine the proper tire inflation pressure for those tires.)
As an added safety feature, your vehicle has been equipped with a tire pressure monitoring system (TPMS) that illuminates a low tire pressure telltale when one or more of your tires is significantly under-inflated. Accordingly, when the low tire pressure telltale illuminates, you should stop and check your tires as soon as possible, and inflate them to the proper pressure. Driving on a significantly under-inflated tire causes the tire to overheat and can lead to tire failure. Under-inflation also reduces fuel efficiency and tire tread life, and may affect the vehicle's handling and stopping ability.

Please note that the TPMS is not a substitute for proper tire maintenance, and it is the driver's responsibility to maintain correct tire pressure, even if under-inflation has not reached the level to trigger illumination of the TPMS low tire pressure telltale.

Your vehicle has also been equipped with a TPMS malfunction indicator to indicate when the system is not operating properly. The TPMS malfunction indicator is combined with the low tire pressure telltale. When the system detects a malfunction, the telltale will flash for approximately one minute and then remain continuously illuminated. This sequence will continue upon subsequent vehicle start-ups as long as the malfunction exists. When the malfunction indicator is illuminated, the system may not be able to detect or signal low tire pressure as intended. TPMS malfunctions may occur for a variety of reasons, including the installation of replacement or alternate tires or wheels on the vehicle that prevent the TPMS from functioning properly. Always check the TPMS malfunction telltale after replacing one or more tires or wheels on your vehicle to ensure that the replacement or alternate tires and wheels allow the TPMS to continue to function properly.

✻ NOTICE

If the TPMS (Low Tire Pressure indicator) doesn't illuminate for 3 seconds when the ignition switch is turned to the ON position or engine is running, or if they remain illuminated after coming on for approximately 3 seconds, have the system checked by a professional workshop. Kia recommends to visit an authorized Kia dealer/service partner.

Low tire pressure telltale



When the tire pressure monitoring system warning indicators are illuminated, one or more of your tires is significantly under-inflated.

If the telltale illuminates, immediately reduce your speed, avoid hard cornering and anticipate increased stopping distances. You should stop and check your tires as soon as possible. Inflate the tires to the proper pressure as indicated on the vehicle's placard or tire inflation pressure label located on the driver's side center pillar outer panel. If you cannot reach a service station or if the tire cannot hold the newly added air, replace the low pressure tire with the spare tire.
Then the TPMS malfunction indicator and the Low Tire Pressure telltale may turn on and illuminate after restarting and about 20 minutes of continuous driving before you have the low pressure tire repaired and replaced on the vehicle.

⚠ CAUTION

- **In winter or cold weather, the low tire pressure telltale may be illuminated if the tire pressure was adjusted to the recommended tire inflation pressure in warm weather. It does not mean your TPMS is malfunctioning because the decreased temperature leads to a proportional lowering of tire pressure.**
- **When you drive your vehicle from a warm area to a cold area or from a cold area to a warm area, or the outside temperature is greatly higher or lower, you should check the tire inflation pressure and adjust the tires to the recommended tire inflation pressure.**
- **When filling tires with more air, conditions to turn off the low tire pressure telltale may not be met. This is because a tire inflator has a margin of error in performance. The low tire pressure telltale will be turned off if the tire pressure is above the recommended tire inflation pressure.**

⚠ WARNING

■ Low pressure damage

Significantly low tire pressure makes the vehicle unstable and can contribute to loss of vehicle control and increased braking distances.
Continued driving on low pressure tires can cause the tires to overheat and fail.

TPMS (Tire Pressure Monitoring System) malfunction indicator



The low tire pressure telltale will illuminate after it blinks for approximately one minute when there is a problem with the Tire Pressure Monitoring System. If the system is able to correctly detect an underinflation warning at the same time as system failure then it will illuminate both the TPMS malfunction and low tire pressure telltales e.g. if front left sensor fails, the TPMS malfunction indicator illuminates, but if the front right, rear left, or rear right tire is under-inflated, the low tire pressure telltales may illuminate together with the TPMS malfunction indicator.

In this case, have the system checked by a professional workshop to determine the cause of the problem. Kia recommends to visit an authorized Kia dealer/service partner.

⚠ CAUTION

- **The TPMS malfunction indicator may be illuminated if the vehicle is moving around electric power supply cables or radios transmitter such as at police stations, government and public offices, broadcasting stations, military installations, airports, or transmitting towers, etc. This can interfere with normal operation of the Tire Pressure Monitoring System (TPMS).**
- **The TPMS malfunction indicator may be illuminated if snow chains are used or some separate electronic devices such as notebook computer, mobile charger, remote starter or navigation etc., are used in the vehicle. This can interfere with normal operation of the Tire Pressure Monitoring System (TPMS).**

Changing a tire with TPMS

If you have a flat tire, the Low Tire Pressure telltale will come on. In this case, have the system checked by a professional workshop. Kia recommends to visit an authorized Kia dealer/service partner.

⚠ CAUTION

We recommend that you use the sealant approved by Kia.
The sealant on the tire pressure sensor and wheel shall be eliminated when you replace the tire with a new one.

Each wheel is equipped with a tire pressure sensor mounted inside the tire behind the valve stem. You must use TPMS specific wheels. Have your tires serviced by a professional workshop. Kia recommends to visit an authorized Kia dealer/service partner.
Even if you replace the low pressure tire with the spare tire, the Low Tire Pressure telltale will remain on until the low pressure tire is repaired and placed on the vehicle.

After you replace the low pressure tire with the spare tire, the TPMS malfunction indicator may illuminate after a few minutes because the TPMS sensor mounted on the spare wheel is not initiated.
Once the low pressure tire is reinflated to the recommended pressure and installed on the vehicle or the TPMS sensor mounted on the replaced spare wheel is initiated by an authorized Kia dealer, the TPMS malfunction indicator and the low tire pressure telltale will extinguish within a few minutes of driving.
If the indicator is not extinguished after a few minutes of driving, have the system be checked by a professional workshop. Kia recommends to visit an authorized Kia dealer/service partner.

⚠ CAUTION

If an original mounted tire is replaced with the spare tire, the TPMS sensor on the replaced spare wheel should be initiated and the TPMS sensor on the original mounted wheel should be deactivated. If the
(Continued)

(Continued)

TPMS sensor on the original mounted wheel located in the spare tire carrier still activates, the tire pressure monitoring system may not operate properly. In this case, have the system checked by a professional workshop. Kia recommends to visit an authorized Kia dealer/service partner.

You may not be able to identify a low tire by simply looking at it. Always use a good quality tire pressure gauge to measure the tire's inflation pressure. Please note that a tire that is hot (from being driven) will have a higher pressure measurement than a tire that is cold (from sitting stationary for at least 3 hours and driven less than 1.6 km (1 mile) during that 3 hour period).
Allow the tire to cool before measuring the inflation pressure. Always be sure the tire is cold before inflating to the recommended pressure.
A cold tire means the vehicle has been sitting for 3 hours and driven for less than 1.6 km (1 mile) in that 3 hour period.

⚠ CAUTION

We recommend that you use the sealant approved by Kia if your vehicle is equipped with a Tire Pressure Monitoring System. The liquid sealant can damage the tire pressure sensors.

⚠ WARNING

■ TPMS

- **The TPMS cannot alert you to severe and sudden tire damage caused by external factors such as nails or road debris.**
- **If you feel any vehicle instability, immediately take your foot off the accelerator, apply the brakes gradually and with light force, and slowly move to a safe position off the road.**

⚠ WARNING

■ Protecting TPMS

(Continued)

(Continued)

Tampering with, modifying, or disabling the Tire Pressure Monitoring System (TPMS) components may interfere with the system's ability to warn the driver of low tire pressure conditions and/or TPMS malfunctions. Tampering with, modifying, or disabling the Tire Pressure Monitoring System (TPMS) components may void the warranty for that portion of the vehicle.

⚠ WARNING

■ For EUROPE

- **Do not modify the vehicle, it may interfere with the TPMS function.**
- **The wheels on the market do not have a TPMS sensor.**
  For your safety, use parts for replacement from a professional workshop. Kia recommends to visit an authorized Kia dealer/service partner.

(Continued)

(Continued)

- **If you use the wheels on the market, use a TPMS sensor approved by an authorized Kia dealer.**
  If your vehicle is not equipped with a TPMS sensor or TPMS does not work properly, you may fail the periodic vehicle inspection conducted in your country.

❋ All vehicles sold in the EUROPE market during below period must be equipped with TPMS.

- **New model vehicle:**
  Nov. 1, 2012 ~
- **Current model vehicle:**
  Nov. 1, 2014~ (Based on vehicle registrations)

IF YOU HAVE A FLAT TIRE (WITH SPARE TIRE, IF EQUIPPED)

Jack and tools

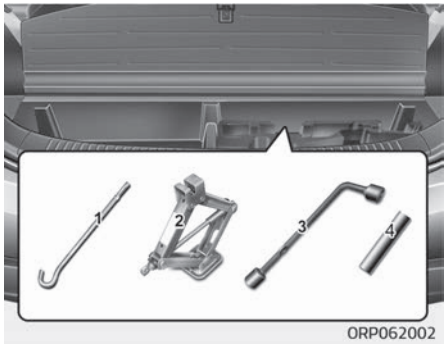

The jack, jack handle, wheel lug nut wrench are stored in the luggage compartment. Pull up the luggage box cover to reach this equipment.

1. Jack handle
2. Jack
3. Wheel lug nut wrench
4. Socket

Jacking instructions

The jack is provided for emergency tire changing only.

To prevent the jack from "rattling" while the vehicle is in motion, store it properly.
Follow jacking instructions to reduce the possibility of personal injury.

⚠ WARNING

■ Changing tires

- **Never attempt vehicle repairs in the traffic lanes of a public road or highway.**
- **Always move the vehicle completely off the road and onto the shoulder before trying to change a tire. The jack should be used on level firm ground. If you cannot find a firm, level place off the road, call a towing service company for assistance.**
- **Be sure to use the correct front and rear jacking positions on the vehicle; never use the bumpers or any other part of the vehicle for jacking support.**

(Continued)

(Continued)

- **The vehicle can easily roll off the jack causing serious injury or death.**
- **Do not get under a vehicle that is supported by a jack.**
- **Do not start or run the engine while the vehicle is on the jack.**
- **Do not allow anyone to remain in the vehicle while it is on the jack.**
- **Make sure any children present are in a secure place away from the road and from the vehicle to be raised with the jack.**

Removing and storing the spare tire

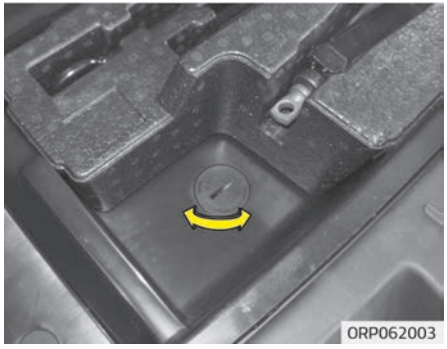

Your spare tire is stored underneath your vehicle, directly below the cargo area.
To remove the spare tire:

1. Open the tailgate and luggage under tray cover.
2. Find the plastic hex bolt cover (1) and remove the cover.

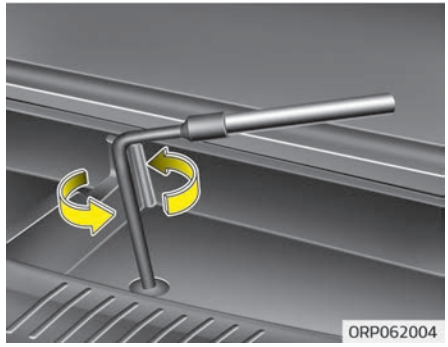

3. Connect the socket and wheel lug nut wrench.
4. Use the wheel lug nut wrench to loosen the bolt enough to lower the spare tire.
   Turn the wrench counterclockwise until the spare tire reaches the ground.

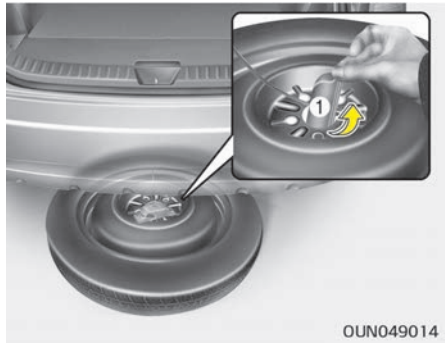

5. After the spare tire reaches the ground, continue to turn the wrench counterclockwise, and draw the spare tire outside. Never rotate the wrench excessively, otherwise the spare tire carrier may be damaged.
6. Remove the retainer (1) from the center of the spare tire.

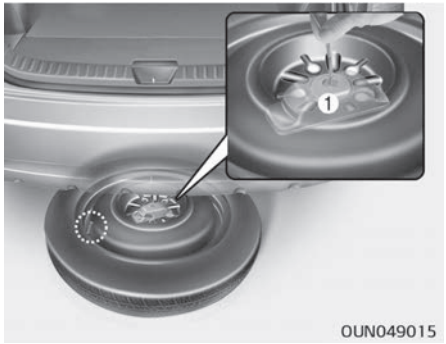

To store the spare tire:

1. Lay the tire on the ground with the valve stem facing up.
2. Place the wheel under the vehicle and install the retainer (1) through the wheel center.
3. Turn the wrench clockwise until it clicks.

⚠ WARNING

Ensure the spare tire retainer is properly aligned with the center of the spare tire to prevent the spare
(Continued)

(Continued)

tire "rattling". Otherwise, it may cause the spare tire to fall off the carrier and lead to an accident.

Changing tires

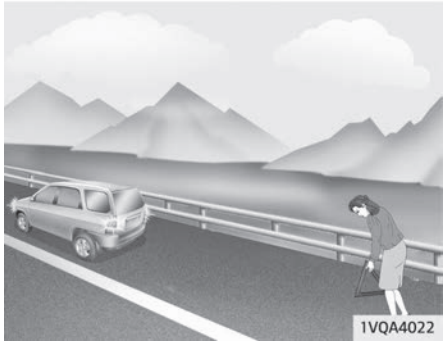

1. Park on a level surface and apply the parking brake firmly.
2. Shift the shift lever into R (Reverse) with manual transaxle or P (Park) with automatic transaxle/ dual clutch transmission.
3. Activate the hazard warning flasher.



4. Remove the wheel lug nut wrench, jack, jack handle, and spare tire from the vehicle.
5. Block both the front and rear of the wheel that is diagonally opposite the jack position.

⚠ WARNING

■ Changing a tire
(Continued)

(Continued)

- **To prevent vehicle movement while changing a tire, always set the parking brake fully, and always block the wheel diagonally opposite the wheel being changed.**
- **We recommend that the wheels of the vehicle be blocked, and that no person remain in a vehicle that is being jacked.**



6. Loosen the wheel lug nuts counterclockwise one turn each, but do not remove any nut until the tire has been raised off the ground.

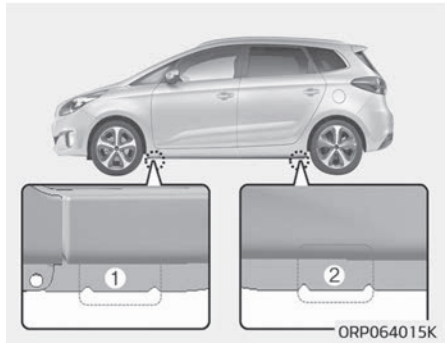

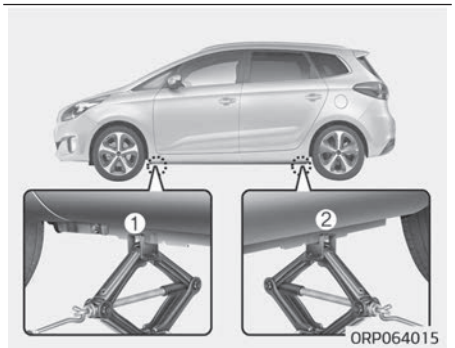

7. Place the jack at the front (1) or rear (2) jacking position closest to the tire you are changing. Place the jack at the designated locations under the frame. The jacking positions are plates welded to the frame with two tabs and a raised dot to index with the jack.

⚠ WARNING

■ Jack location

To reduce the possibility of injury, be sure to use only the jack provided with the vehicle and in the correct jack position; never use any other part of the vehicle for jack support.

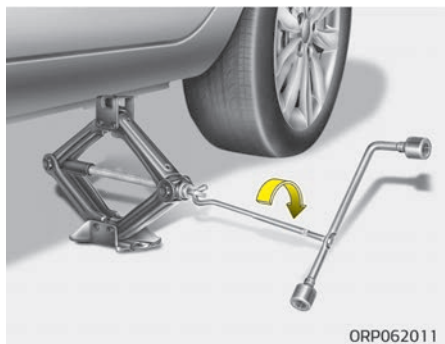

8. Insert the jack handle into the jack and turn it clockwise, raising the vehicle until the tire just clears the ground. This measurement is approximately 30 mm (1.2 in). Before

removing the wheel lug nuts, make sure the vehicle is stable and that there is no chance for movement or slippage.

9. Loosen the wheel nuts and remove them with your fingers. Slide the wheel off the studs and lay it flat so it cannot roll away. To put the wheel on the hub, pick up the spare tire, line up the holes with the studs and slide the wheel onto them.
   If this is difficult, tip the wheel slightly and get the top hole in the wheel lined up with the top stud. Then jiggle the wheel back and forth until the wheel can be slid over the other studs.

⚠ WARNING

Wheels and wheel covers may have sharp edges. Handle them carefully to avoid possible severe injury. Before putting the wheel into place, be sure that there is nothing on the hub or wheel (such as mud, tar, gravel, etc.) that prevents with the wheel from fitting solidly against the hub.

(Continued)

(Continued)

If there is, remove it. If there is not good contact on the mounting surface between the wheel and hub, the wheel nuts could come loose and cause the loss of a wheel. Loss of a wheel may result in loss of control of the vehicle. This may cause serious injury or death.

10. To reinstall the wheel, hold it on the studs, put the wheel nuts on the studs and tighten them finger tight. Jiggle the tire to be sure it is completely seated, then tighten the nuts as much as possible with your fingers again.
11. Lower the car to the ground by turning the wheel nut wrench counterclockwise.

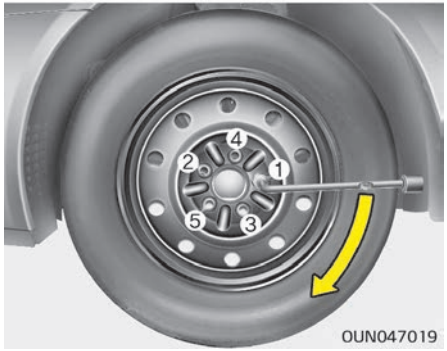

Then position the wrench as shown in the drawing and tighten the wheel nuts. Be sure the socket is seated completely over the nut. Do not stand on the wrench handle or use an extension pipe over the wrench handle. Go around the wheel tightening every other nut until they are all tight. Then double-check each nut for tightness. After changing wheels, have the system checked by a professional workshop. Kia recommends to visit an authorized Kia dealer/service partner.

Wheel nut tightening torque:

Steel wheel & aluminum alloy wheel: 11~13 kgf·m (79~94 lbf·ft)

If you have a tire gauge, remove the valve cap and check the air pressure. If the pressure is lower than recommended, drive slowly to the nearest service station and inflate to the correct pressure. If it is too high, adjust it until it is correct. Always reinstall the valve cap after checking or adjusting tire pressure. If the cap is not replaced, air may leak from the tire. If you lose a valve cap, buy another and install it as soon as possible.
After you have changed wheels, always secure the flat tire in its place and return the jack and tools to their proper storage locations.

⚠ CAUTION

Your vehicle has metric threads on the wheel studs and nuts. Make certain during wheel removal that the same nuts that were removed are reinstalled - or, if replaced, that nuts with metric threads and the same chamfer configuration are used. Installation of a non-metric thread nut on a metric stud or vice-versa will not secure the wheel to the hub properly and will damage the stud so that it must be replaced.

(Continued)

(Continued)

Note that most lug nuts do not have metric threads. Be sure to use extreme care in checking for thread style before installing aftermarket lug nuts or wheels. If in doubt, consult a professional workshop. Kia recommends to consult an authorized Kia dealer/service partner.

⚠ WARNING

■ Wheel studs

If the studs are damaged, they may lose their ability to retain the wheel. This could lead to the loss of the wheel and a collision resulting in serious injuries.

To prevent the jack, jack handle, wheel lug nut wrench, socket and spare tire from rattling while the vehicle is in motion, store them properly.

⚠ WARNING

■ Inadequate spare tire pressure

Check the inflation pressures as soon as possible after installing the spare tire. Adjust it to the specified pressure, if necessary. Refer to "Tires and wheels" on page 8-56.

Important - use of compact spare tire (if equipped)

Your vehicle is equipped with a compact spare tire. This compact spare tire takes up less space than a regular- size tire. This tire is smaller than a conventional tire and is designed for temporary use only.

⚠ CAUTION

- **You should drive carefully when the compact spare is in use. The compact spare should be replaced by the proper conventional tire and rim at the first opportunity.**

(Continued)

(Continued)

- **The operation of this vehicle is not permitted with more than one compact spare tire in use at the same time.**

⚠ WARNING

The compact spare tire is for emergency use only. Do not operate your vehicle on this compact spare at speeds over 80 km/h (50 mph). The original tire should be repaired or replaced as soon as is possible to avoid failure of the spare possibly leading to personal injury or death.

The compact spare should be inflated to 420 kPa (60 psi).

✻ NOTICE

Check the inflation pressure after installing the spare tire. Adjust it to the specified pressure, as necessary.

When using a compact spare tire, observe the following precautions:

- Under no circumstances should you exceed 80 km/h (50 mph); a higher speed could damage the tire.
- Ensure that you drive slowly enough for the road conditions to avoid all hazards. Any road hazard, such as a pothole or debris, could seriously damage the compact spare.
- Any continuous road use of this tire could result in tire failure, loss of vehicle control, and possible personal injury.
- Do not exceed the vehicle's maximum load rating or the load-carrying capacity shown on the sidewall of the compact spare tire.
- Avoid driving over obstacles. The compact spare tire diameter is smaller than the diameter of a conventional tire and reduces the ground clearance approximately 25 mm (1 inch), which could result in damage to the vehicle.
- Do not take this vehicle through an automatic car wash while the compact spare tire is installed.
- Do not use tire chains on the compact spare tire. Because of the smaller size, a tire chain will not fit properly. This could damage the vehicle and result in loss of the chain.
- The compact spare tire should not be installed on the front axle if the vehicle must be driven in snow or on ice.
- Do not use the compact spare tire on any other vehicle because this tire has been designed especially for your vehicle.
- The compact spare tire's tread life is shorter than a regular tire. Inspect your compact spare tire regularly and replace worn compact spare tires with the same size and design, mounted on the same wheel.
- The compact spare tire should not be used on any other wheels, nor should standard tires, snow tires, wheel covers or trim rings be used with the compact spare wheel. If such use is attempted, damage to these items or other car components may occur.
- Do not use more than one compact spare tire at a time.
- Do not tow a trailer while the compact spare tire is installed.

Jack label

■ Example

• Type A

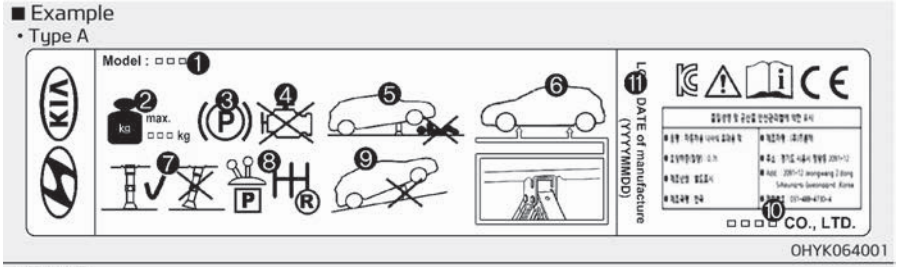

OHYK064001

• Type B

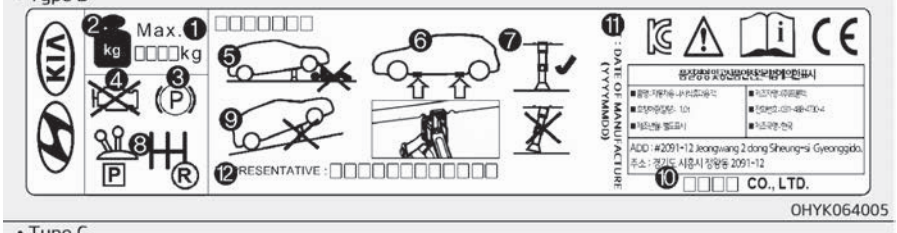

OHYK064005

• Type C



OHYK064002

❊ The actual Jack label in the vehicle may differ from the illustration. For more detailed specifications, refer to the label attached to the jack.

1. Model Name
2. Maximum allowable load
3. When using the jack, set your parking brake.
4. When using the jack, stop the engine.
5. Do not get under a vehicle that is supported by a jack.
6. The designated locations under the frame
7. When supporting the vehicle, the base plate of jack must be vertical under the lifting point.
8. Shift into Reverse gear on vehicles with manual transmission or move the shift lever to the P position on vehicles with automatic transmission/ dual clutch transmission.
9. The jack should be used on firm level ground.
10. Jack manufacturer
11. Production date
12. Representative company and address

EC Declaration of Conformity for Jack

CE

EC Declaration of Conformity
according to EC Machinery Directive 2006/42/EC

We, **FRONTEC CO., LTD.**
2091-12 Jeongwang 2(i)-dong Siheung-si Gyeonggi-d ,Korea
declare under our sole responsibility that the product

Product : JACK-ASSY
Type Designation(s) : 1200KG, 1000KG, 800KG, 700KG, 500KG
Serial No. : N/A (prototype)
Year of Manufacture : 2013
to which this declaration relates is in conformity with the following standard(s) or other normative document(s).

EN ISO12100 (2010)	Safety of machinery - General principles for design – Risk assessment and risk reduction
EN 1494/A1 (2008)	Mobile or movable jacks and associated lifting equipment

following the provisions of Directive(s),

2006/42/EC	Directive on the approximation of the laws of Member States relating to machinery (OJ L157 Jun, 9, 2006)

Siheung-si Gyeonggi-d ,Korea / 15.07.2013 SOO HONG, MIN President
(Place and date of issue)(Name and signature or equivalent making of authorized person)

* T.C.F Compiling Location:
- Address: PRIBORSKA 280, 739 42 FRYDEK MISTEK,CHLEBOVICE, CZECH REPUBLIC
- Team: Purchase team
- Company name: HANWHA L&C CZECH s.r.o

JACKDOC14F

IF YOU HAVE A FLAT TIRE (WITH TIRE MOBILITY KIT, IF EQUIPPED)

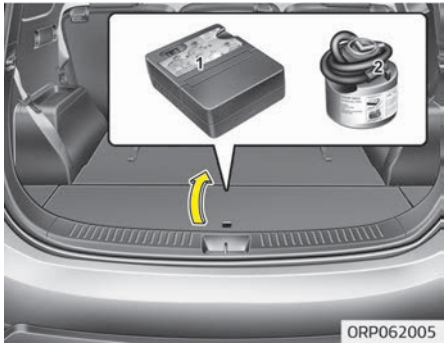

Please read the instructions before using the Tire Mobility Kit.

1. Compressor
2. Sealant bottle

The Tire Mobility Kit is a temporary fix to the tire and have the tire inspected by a professional workshop as soon as possible. Kia recommends to visit an authorized Kia dealer/service partner.

⚠ CAUTION

■ One sealant for one tire

(Continued)

(Continued)

When two or more tires are flat, do not use the tire mobility kit because the one supplied canister of sealant in the Tire Mobility Kit is to only enough sealant for one flat tire.

⚠ WARNING

■ Tire wall

Do not use the Tire Mobility Kit to repair punctures in the tire walls. This can result in an accident due to tire failure.

⚠ WARNING

■ Temporary fix

Have your tire repaired as soon as possible. The tire may lose air pressure at any time after inflating with the Tire Mobility Kit.

Introduction



With the Tire Mobility Kit (TMK) you stay mobile even after experiencing a tire puncture.
The system of compressor and sealing compound effectively and comfortably seals most punctures in a passenger car tire caused by nails or similar objects and reinflates the tire.
After you ensured that the tire is properly sealed you can drive cautiously on the tire (up to 200 km (120 miles)) at a max. speed of 80 km/h (50 mph) in order to reach a vehicle or tire dealer to have the tire replaced.

It is possible that some tires, especially with larger punctures or damage to the sidewall, cannot be sealed completely.
Air pressure loss in the tire may adversely affect tire performance.
For this reason, you should avoid abrupt steering or other driving maneuvers, especially if the vehicle is heavily loaded or if a trailer is in use.
The TMK is not designed or intended as a permanent tire repair method and is to be used for one tire only.
This instruction shows you step by step how to temporarily seal the puncture simply and reliably.
Read the “Notes on the safe use of the TMK” on page 7-28.

⚠ WARNING

Do not use the TMK if a tire is severely damaged by driving run flat or with insufficient air pressure. Only punctured areas located within the tread region of the tire can be sealed using the TMK.

Components of the Tire Mobility Kit (TMK)

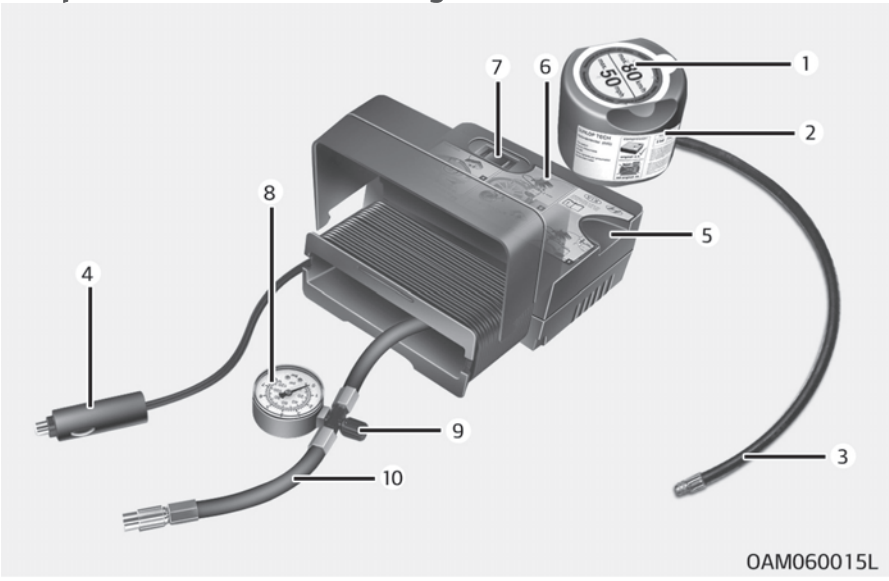

1. Speed restriction label
2. Sealant bottle and label with speed restriction
3. Filling hose from sealant bottle to wheel
4. Connectors and cable for the power outlet direct connection
5. Holder for the sealant bottle
6. Compressor
7. On/off switch
8. Pressure gauge for displaying the tire inflation pressure
9. Screw cap for reducing tire inflation pressure
10. Hose to connect compressor and sealant bottle or compressor and wheel

Connectors, cable and connection hose are stored in the compressor housing.

⚠ WARNING

■ Expired sealant
(Continued)

(Continued)

Do not use the tire sealant after the sealant has expired (i.e. pasted the expiration date on the sealant container). This can increase the risk of tire failure.

⚠ WARNING

■ Sealant

- **Keep out of reach of children.**
- **Avoid contact with eyes.**
- **Do not swallow.**

Strictly follow the specified sequence, otherwise the sealant may escape under high pressure.

Using the Tire Mobility Kit (TMK)



1. Detach the speed restriction label (1) from the sealant bottle (2), and place it in a highly visible place inside the vehicle such as on the steering wheel to remind the driver not to drive too fast.



2. Shake the sealant bottle.
3. Screw the connection hose (10) onto the connector of the sealant bottle.
4. Ensure that the screw cap (9) is closed.
5. Unscrew the valve cap from the valve of the flat tire and screw the filling hose (3) of the sealant bottle onto the valve.
6. Insert the sealant bottle into the housing (5) of the compressor so that the bottle is upright.
7. Ensure that the compressor is switched off, position "0".

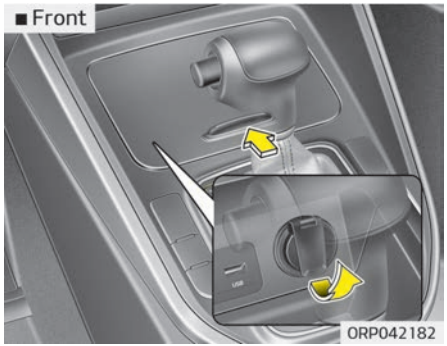

8. Plug the compressor power cord into the front passenger side power outlet of the vehicle.

⚠ WARNING

Only use the front passenger side power outlet when connecting the power cord.

9. With the engine start/stop button position on or ignition switch position on, switch on the compressor and let it run for approximately 5~7 minutes to fill the sealant up to proper pressure. (refer to "Tire and Wheels" on page 8-56). The inflation pressure of the tire after filling is unimportant and will be checked/corrected later.
   Be careful not to overinflate the tire and stay away from the tire when filling it.
   When the tire and wheel are damaged, do not use Tire Mobility Kit for your safety.

⚠ CAUTION

■ Tire pressure

Do not attempt to drive your vehicle if the tire pressure is below 200 kpa (29 psi).This could result in an accident due to sudden tire failure.

10. Switch off the compressor.
11. Detach the hoses from the sealant bottle connector and from the tire valve.

Return the TMK to its storage location in the vehicle.

⚠ WARNING

■ Carbon monoxide

Carbon monoxide poisoning and suffocation is possible if the engine is left running in a poorly ventilated or unventilated location (such as inside a building).

Distributing the sealant

12. Immediately drive approximately 7~10 km (4~6 miles or about 10 min) to evenly distribute the sealant in the tire.

⚠ CAUTION

Do not exceed a speed of 60 km/h (35 mph). If possible, do not fall below a speed of 20 km/h (12 mph).
While driving, if you experience any unusual vibration, ride disturbance or noise, reduce your speed and drive with caution until you can safely pull off of the side of the road. Call for road side service or towing.
(Continued)

(Continued)

When you use the Tire Mobility Kit, the tire pressure sensors and wheel may be stained by sealant.
Therefore, remove the tire pressure sensors and have the vehicle inspected at a professional workshop. Kia recommends to visit an authorized Kia dealer/service partner.

Checking the tire inflation pressure

1. After driving approximately 7~10 km (4~6 miles or about 10 minutes), stop at a suitable location.
2. Connect connection hose (10) of the compressor directly to the tire valve.
3. Connect between compressor and the vehicle power outlet using the cable and connectors.
4. Adjust the tire inflation pressure to 220 kPa (32 psi). With the ignition switched on, proceed as follows.
   - **To increase the inflation pressure:** Switch on the compressor, position "I". To check the current inflation pressure setting, briefly switch off the compressor.

⚠ WARNING

Do not let the compressor run for more than 10 minutes, otherwise the device will overheat and may be damaged.

   - To reduce the inflation pressure: Loosen the screw cap (9) on the compressor hose.

⚠ CAUTION

If the inflation pressure is not maintained, drive the vehicle a second time, refer to "Distributing the sealant" on page 7-27. Then repeat steps 1 to 4.
Use of the TMK may be ineffectual for tire damage larger than approximately 4 mm (0.16 in).
Contact a professional workshop if the tire cannot be made roadworthy with the Tire Mobility Kit. Kia recommends to visit an authorized Kia dealer/service partner.

⚠ WARNING

The tire inflation pressure must be at least 220 kPa (32 psi). If it is not, do not continue driving. Call for road side service or towing.

Notes on the safe use of the Tire Mobility Kit

- Park your car at the side of the road so that you can work with the TMK away from moving traffic. Place your warning triangle in a prominent place to make passing vehicles aware of your location.
- To be sure your vehicle will not move, even when you're on fairly level ground, always set your parking brake.
- Only use the TMK for sealing/inflation passenger car tires. Do not use on motorcycles, bicycles or any other type of tires.
- Do not remove any foreign objects-such as nails or screws -that have penetrated the tire.
- Before using the TMK, read the precautionary advice printed on the sealant bottle!

- Provided the car is outdoors, leave the engine running. Otherwise operating the compressor may eventually drain the car battery.
- Never leave the TMK unattended while it is being used.
- Do not leave the compressor running for more than 10 min. at a time or it may overheat.
- Do not use the TMK if the ambient temperature is below -30 °C (-22 °F).
- When the tire and wheel are damaged, do not use Tire Mobility Kit for your safety.

Technical data

System voltage: DC 12 V
Working voltage: DC 10 - 15 V
Amperage rating: max. 15 A
Suitable for use at temperatures: -30 ~ +70°C (-22 ~ +158°F)
Max. working pressure: 6 bar (87 psi)
Size Compressor: 170 x 150 x 60 mm (6.7 x 5.9 x 2.4 in.)
Sealant bottle: 85 x 77 ø mm (3.3 x 3.0 ø in.)
Compressor weight: 0.8 kg (1.8 lbs)
Sealant volume: 200 ml (12.2 cu. in.)

❇ Sealant and spare parts can be obtained and replaced at an authorized vehicle or tire dealer. Empty sealant bottles may be disposed of at home. Liquid residue from the sealant should be disposed of by your vehicle or tire dealer or in accordance with local waste disposal regulations.

TOWING

Towing service

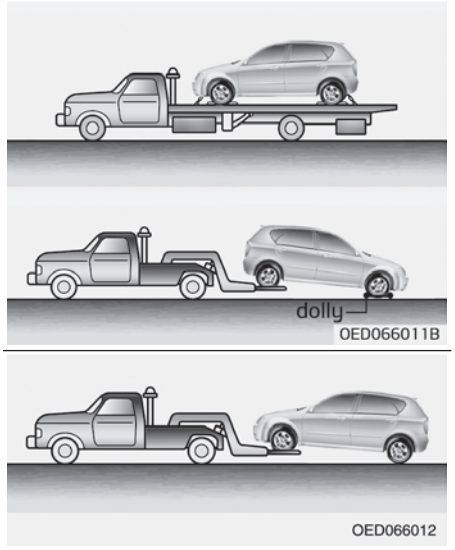

If emergency towing is necessary, we recommend having it done by an authorized Kia dealer or a commercial tow-truck service. Proper lifting and towing procedures are necessary to prevent damage to the vehicle. The use of wheel dollies or flatbed is recommended.

For trailer towing guidelines information, refer to "Trailer towing" on page 6-87.

It is acceptable to tow the vehicle with the rear wheels on the ground (without dollies) and the front wheels off the ground.
If any of the loaded wheels or suspension components are damaged or the vehicle is being towed with the front wheels on the ground, use a towing dolly under the front wheels.
When being towed by a commercial tow truck and wheel dollies are not used, the front of the vehicle should always be lifted, not the rear.

✻ NOTICE

If the EPB does not release normally, contact a professional workshop. Kia recommends to visit an authorized Kia dealer/service partner.

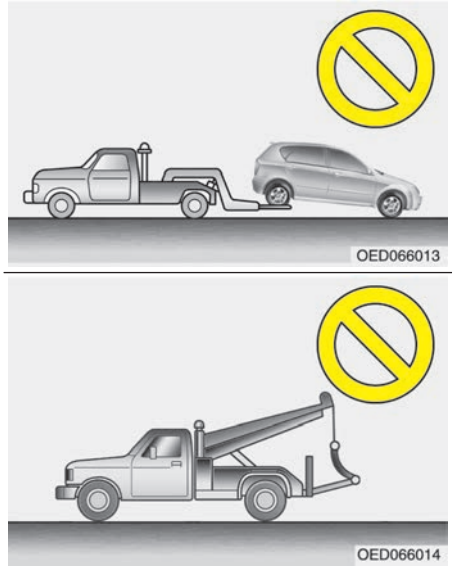

⚠ CAUTION

- **Do not tow the vehicle backwards with the front wheels on the ground as this may cause damage to the vehicle.**

(Continued)

(Continued)

- **Do not tow with sling-type equipment. Use wheel lift or flatbed equipment.**

When towing your vehicle in an emergency without wheel dollies:

1. Set the ignition switch in the ACC position.
2. Place the transaxle shift lever in N (Neutral).
3. Release the parking brake.

⚠ CAUTION

Failure to place the transaxle shift lever in N (Neutral) may cause internal damage to the transaxle.

Removable towing hook

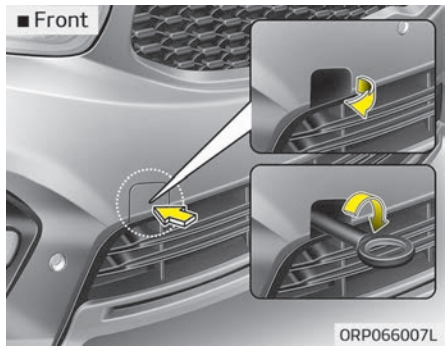

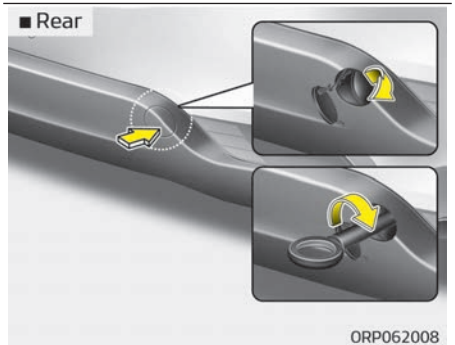

1. Open the tailgate, and remove the towing hook from the tool case.
2. Remove the hole cover pressing the lower part of the cover on the bumper.
3. Install the towing hook by turning it clockwise into the hole until it is fully secured.
4. Remove the towing hook and install the cover after use.

Emergency towing

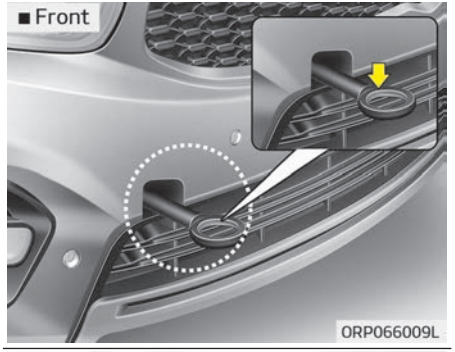

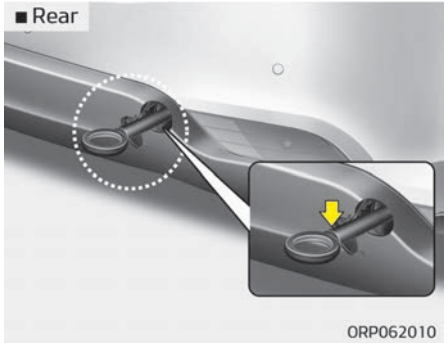

If towing is necessary, we recommend you to have it done by an authorized Kia dealer or a commercial tow truck service.

If towing service is not available in an emergency, your vehicle may be temporarily towed using a cable or chain secured to the emergency towing hook under the front (or rear) of the vehicle. Use extreme caution when towing the vehicle. A driver must be in the vehicle to steer it and operate the brakes.

Towing in this manner may be done only on hard-surfaced roads for a short distance and at low speed. Also, the wheels, axles, power train, steering and brakes must all be in good condition.

- Do not use the towing hooks to pull a vehicle out of mud, sand or other conditions from which the vehicle cannot be driven out under its own power.
- Avoid towing a vehicle heavier than the vehicle doing the towing.
- The drivers of both vehicles should communicate with each other frequently.

⚠ CAUTION

- **Attach a towing strap to the tow hook.**
- **Using a portion of the vehicle other than the tow hooks for towing may damage the body of your vehicle.**
- **Use only a cable or chain specifically intended for use in towing vehicles. Securely fasten the cable or chain to the towing hook provided.**

- Before emergency towing, check that the hook is not broken or damaged.
- Fasten the towing cable or chain securely to the hook.
- Do not jerk the hook. Apply steady and even force.
- To avoid damaging the hook, do not pull from the side or at a vertical angle. Always pull straight ahead.

⚠ WARNING

Use extreme caution when towing the vehicle.

- **Avoid sudden starts or erratic driving maneuvers which would place excessive stress on the emergency towing hook and towing cable or chain. The hook and towing cable or chain may break and cause serious injury or damage.**
- **If the disabled vehicle is unable to be moved, do not forcibly continue the towing. We recommend that you contact an authorized Kia dealer or a commercial tow truck service for assistance.**
- **Tow the vehicle as straight ahead as possible.**
- **Keep away from the vehicle during towing.**

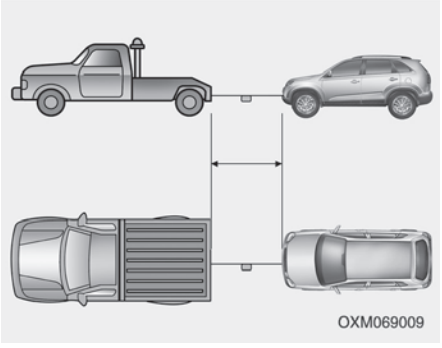

- Use a towing strap less than 5 m (16 feet) long. Attach a white or red cloth (about 30 cm (12 inches) wide) in the middle of the strap for easy visibility.
- Drive carefully so that the towing strap is not loosened during towing.

Emergency towing precautions

- Turn the ignition switch to ACC so the steering wheel isn't locked.
- Place the transaxle shift lever in N (Neutral).
- Release the parking brake.
- Depress the brake pedal with more force than normal since you will have reduced brake performance.
- More steering effort will be required because the power steering system will be disabled.
- If you are driving down a long hill, the brakes may overheat and brake performance will be reduced. Stop often and let the brakes cool off.

⚠ CAUTION

■ Automatic transaxle / Dual clutch transmission

- **If the car is being towed with all four wheels on the ground, it can be towed only from the front. Be sure that the transaxle is in neutral. Be sure the steering is unlocked by placing the ignition switch in the ACC position. A driver must be in the towed vehicle to operate the steering and brakes.**

(Continued)

(Continued)

- **To avoid serious damage to the automatic transaxle / dual clutch transmission, limit the vehicle speed to 15 km/h (10 mph) and drive less than 1.5 km (1 mile) when towing.**
- **Before towing, check the automatic transaxle / dual clutch transmission fluid leak under your vehicle. If the automatic transaxle / dual clutch transmission fluid is leaking, a flatbed equipment or towing dolly must be used.**

EMERGENCY COMMODITY (IF EQUIPPED)

There are some emergency commodities in the vehicle to help you respond to the emergency situation.

Fire extinguisher

If there is small fire and you know how to use the fire extinguisher, take the following steps carefully.

1. Pull the pin at the top of the extinguisher that keeps the handle from being accidentally pressed.
2. Aim the nozzle toward the base of the fire.
3. Stand approximately 2.5 m (8 ft) away from the fire and squeeze the handle to discharge the extinguisher. If you release the handle, the discharge will stop.
4. Sweep the nozzle back and forth at the base of the fire. After the fire appears to be out, watch it carefully since it may re-ignite.

Triangle reflector

Place the triangle reflector on the road to warn oncoming vehicles during emergencies, such as when the vehicle is parked by the roadside due to any problems.

Maintenance

Engine compartment....8-03
Maintenance services....8-06
Owner's responsibility....8-06
Owner maintenance precautions....8-06
Engine compartment precautions (Diesel engine)....8-07
Owner maintenance....8-09
Owner maintenance schedule....8-09
Scheduled maintenance service....8-11
Normal Maintenance Schedule – For Europe (Except Russia)....8-12
Normal Maintenance Schedule – For Europe (Except Russia) (Continue)....8-15
Maintenance Under Severe Usage Conditions For Europe (Except Russia)....8-19
Normal Maintenance Schedule – Except Europe (Including Russia)....8-22
Normal Maintenance Schedule – Except Europe (Including Russia) (Continue)....8-25
Maintenance Under Severe Usage Conditions – Except Europe (Including Russia)....8-29
Explanation of scheduled maintenance items....8-32
Engine oil and filter....8-32
Drive belts....8-32
Fuel filter cartridge (for diesel)....8-32
Fuel filter (for gasoline)....8-32
Fuel lines, fuel hoses and connections....8-32
Vapor hose and fuel filler cap....8-33
Vacuum crankcase ventilation hoses....8-33
Air cleaner filter....8-33
Spark plugs (for gasoline engine)....8-33
Valve clearance (for gasoline engine) (Except for Nu 2.0 Engine)....8-33
Cooling system....8-33
Coolant....8-33
Manual transaxle fluid....8-33
Automatic transaxle fluid....8-33
Dual clutch transmission fluid....8-34
Brake hoses and lines....8-34
Brake fluid....8-34
Brake pads, calipers and rotors....8-34
Suspension mounting bolts....8-34
Parking brake....8-34
Steering gear box, linkage & boots/lower arm ball joint....8-34
Drive shafts and boots....8-34
Air conditioning refrigerant/compressor....8-34
Engine oil (Gasoline)....8-35
Checking the engine oil level....8-35
Changing the engine oil and filter....8-35
Engine oil (Diesel)....8-37
Checking the engine oil level....8-37
Changing the engine oil and filter....8-37
Engine coolant....8-39
Checking the coolant level....8-39
Changing the coolant....8-41
Brake/clutch fluid....8-42
Checking the brake/clutch fluid level....8-42
Washer fluid....8-43
Checking the washer fluid level....8-43
Parking brake - Hand type....8-44

Checking the parking brake....8-44
Fuel filter (for diesel)....8-45
Draining water from fuel filter....8-45
Air cleaner....8-46
Filter replacement....8-46
Climate control air filter....8-47
Filter inspection....8-47
Filter replacement....8-47
Wiper blades....8-48
Blade inspection....8-48
Blade replacement....8-48
Battery....8-52
For best battery service....8-52
Battery capacity label....8-53
Battery recharging....8-54
Reset items....8-55
Tires and wheels....8-56
Tire care....8-56
Recommended cold tire inflation pressures....8-56
Checking tire inflation pressure....8-57
Tire rotation....8-58
Wheel alignment and tire balance....8-59
Tire replacement....8-59
Wheel replacement....8-61
Tire traction....8-61
Tire maintenance....8-61
Tire sidewall labeling....8-61
Low aspect ratio tire....8-64
Fuses....8-66
Inner panel fuse replacement....8-67
Fuse switch....8-68
Engine compartment panel fuse replacement....8-69
Main fuse....8-69
Multi fuse....8-70
Fuse/relay panel description....8-70
Light bulbs....8-89
Front light replacement....8-89
Headlight and front fog light aiming (for Europe)....8-93
Side repeater light bulb replacement....8-100
Rear combination light bulb replacement....8-101
High mounted stop light bulb replacement....8-103
License plate light bulb replacement....8-104
Interior light bulb replacement....8-105
Appearance care....8-106
Exterior care....8-106
Interior care....8-110
Emission control system....8-112
1. Crankcase emission control system....8-112
2. Evaporative emission control system....8-112
3. Exhaust emission control system....8-113
Lean NOx Trap....8-115

ENGINE COMPARTMENT

■ Gasoline engine 1.6 L- GDI

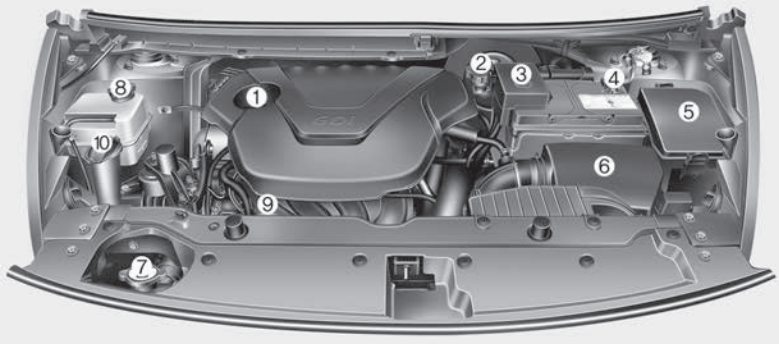

❉ The actual engine room in the vehicle may differ from the illustration. ORP076001L

1. Engine oil filler cap
2. Brake/clutch fluid reservoir
3. Positive battery terminal
4. Negative battery terminal
5. Fuse box
6. Air cleaner
7. Radiator cap
8. Engine coolant reservoir
9. Engine oil dipstick
10. Windshield washer fluid reservoir

❉ The actual engine room in the vehicle may differ from the illustration.

■ Gasoline engine 2.0 L - GDI

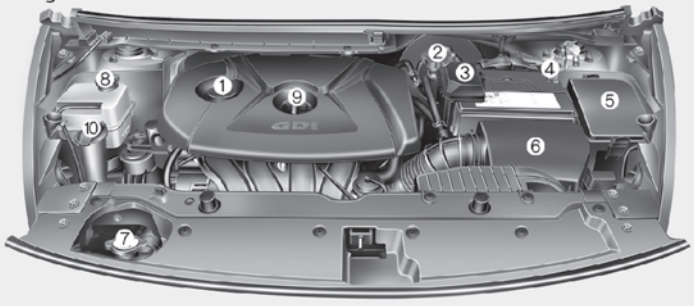

■ Gasoline engine 2.0 L - MPI

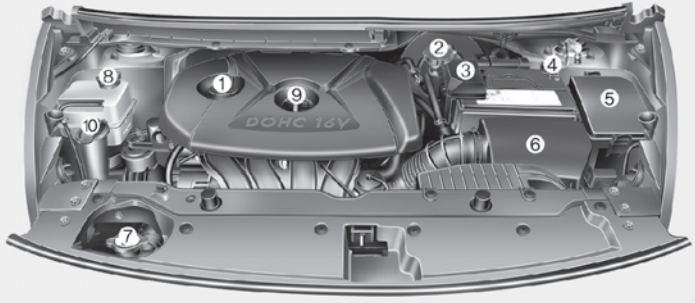

❋ The actual engine room in the vehicle may differ from the illustration.

ORP076002L/ORP076003L

1. Engine oil filler cap
2. Brake/clutch fluid reservoir
3. Positive battery terminal
4. Negative battery terminal
5. Fuse box
6. Air cleaner
7. Radiator cap
8. Engine coolant reservoir
9. Engine oil dipstick
10. Windshield washer fluid reservoir

❋ The actual engine room in the vehicle may differ from the illustration.

■ Diesel engine -1.7L

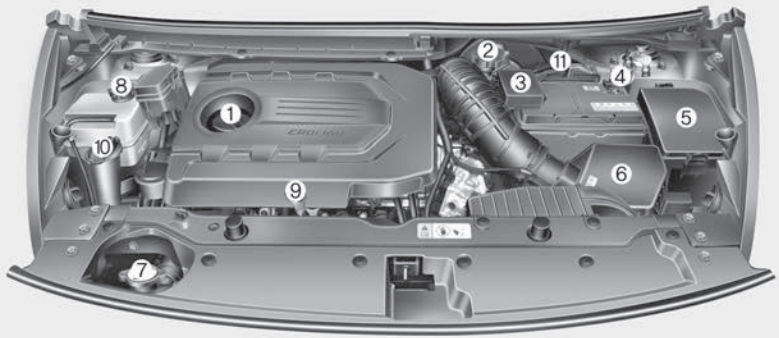

❊ The actual engine room in the vehicle may differ from the illustration.

ORP076083L

1. Engine oil filler cap
2. Brake/clutch fluid reservoir
3. Positive battery terminal
4. Negative battery terminal
5. Fuse box
6. Air cleaner
7. Radiator cap
8. Engine coolant reservoir
9. Engine oil dipstick
10. Windshield washer fluid reservoir
11. Fuel filter

❊ The actual engine room in the vehicle may differ from the illustration.

MAINTENANCE SERVICES

You should exercise the utmost care to prevent damage to your vehicle and injury to yourself whenever performing any maintenance or inspection procedures.
Inadequate, incomplete or insufficient servicing may result in operational problems with your vehicle that could lead to vehicle damage, an accident, or personal injury.

Owner's responsibility

✻ NOTICE

Maintenance Service and Record Retention are the owner's responsibility.

Have your vehicle serviced by a professional workshop. Kia recommends to visit an authorized Kia dealer/service partner. You should retain documents that show proper maintenance has been performed on your vehicle in accordance with the maintenance schedule. You need this information to establish your compliance with the servicing and maintenance requirements of your vehicle warranties. Detailed warranty information is provided in your Warranty & Maintenance book. Repairs and adjustments required as a result of improper maintenance or a lack of required maintenance are not covered when your vehicle is covered by warranty.

Owner maintenance precautions

Improper or incomplete service may result in problems. This chapter gives instructions only for the maintenance items that are easy to perform.

✻ NOTICE

Improper owner maintenance during the warranty period may affect

(Continued)

(Continued)

warranty coverage. For details, read the separate Warranty & Maintenance book provided with the vehicle. If you're unsure about any servicing or maintenance procedure, have the system serviced by a professional workshop. Kia recommends to visit an authorized Kia dealer/service partner.

⚠ WARNING

■ Maintenance work

- **Performing maintenance work on a vehicle can be dangerous. You can be seriously injured while performing some maintenance procedures. If you lack sufficient knowledge and experience or the proper tools and equipment to do the work, have the system serviced by a professional workshop. Kia recommends to visit an authorized Kia dealer/service partner.**

(Continued)

(Continued)

- **Working under the hood with the engine running is dangerous. It becomes even more dangerous when you wear jewelry or loose clothing. These can become entangled in moving parts and result in injury. Therefore, if you must run the engine while working under the hood, make certain that you remove all jewelry (especially rings, bracelets, watches and necklaces) and all neckties, scarves, and similar loose clothing before getting near the engine or cooling fans.**

Engine compartment precautions (Diesel engine)

- The injector operates at high voltage (maximum 200v). Therefore, the following accidents may occur.
  - Direct contact with the injector or injector wiring may cause electric shock or damage your muscle or nerve system.
  - The electromagnetic wave from the operating injector may cause the artificial heart pacemaker to malfunction.
- Follow the safety tips provided below, when you are checking the engine room while the engine is running.
  - Do not touch the injector, injector wirings, and the engine computer while the engine is running.
  - Do not remove the injector connector while the engine is running.
  - People using pacemakers must not go near the engine while the engine is starting or running.

⚠ WARNING

■ Diesel engine

Never work on injection system with engine running or within 30 seconds after shutting off engine. High-pressure pump, rail, injectors and high-pressure pipes are subject to high pressure even after the engine stopped. The fuel jet produced by fuel leaks may cause serious injury, if it touches the body. People using pacemakers should not move than 30 cm closer to the ECU or wiring harness within the engine room while engine is running, since the

(Continued)

(Continued)

high currents in the electronic engine control system produce considerable magnetic fields.

⚠ CAUTION

- **Do not put heavy objects or apply excessive force on top of the engine cover (if equipped) or fuel related parts.**
- **When you inspect the fuel system (fuel lines and fuel injection devices), contact a professional workshop. Kia recommends to visit an authorized Kia dealer/service partner.**
- **Do not drive long time with the engine cover (if equipped) removed.**
- **When checking the engine room, do not go near fire. Fuel, washer fluid, etc. are flammable oils that may cause fire.**

(Continued)

(Continued)

- **Before touching the battery, ignition cables and electrical wiring, you should disconnect the battery "-" terminal. You may get an electric shock from the electric current.**
- **When you remove the interior trim cover with a flat bed (-) driver, be careful not to damage the cover.**
- **Be careful when you replace and clean bulbs to avoid burns or electrical shock.**

OWNER MAINTENANCE

The following lists are vehicle checks and inspections that should be performed at the frequencies indicated to help ensure safe, dependable operation of your vehicle.
Any adverse conditions should be brought to the attention of your dealer as soon as possible.
These Owner Maintenance Checks are generally not covered by warranties and you may be charged for labor, parts and lubricants used.

Owner maintenance schedule

When you stop for fuel:

- Check the engine oil level.
- Check coolant level in coolant reservoir.
- Check the windshield washer fluid level.
- Look for low or under-inflated tires.
- Check the radiator and condenser.
  Check if the front of the radiator and condenser are clean and not blocked with leaves, dirt or insects etc.
  If any of the above parts are extremely dirty or you are not sure of their condition, contact a professional workshop. Kia recommends to visit an authorized Kia dealer/service partner.

⚠ WARNING

Be careful when checking your engine coolant level when the engine is hot. Scalding hot coolant and steam may blow out under pressure. This could cause burns or other serious injury.

While operating your vehicle:

- Note any changes in the sound of the exhaust or any smell of exhaust fumes in the vehicle.
- Check for vibrations in the steering wheel. Notice any increased steering effort or looseness in the steering wheel, or change in its straight-ahead position.
- Notice if your vehicle constantly turns slightly or "pulls" to one side when traveling on smooth, level road.
- When stopping, listen and check for unusual sounds, pulling to one side, increased brake pedal travel or "hard-to-push" brake pedal.
- If any slipping or changes in the operation of your transaxle occurs, check the transaxle fluid level.
- Check manual transaxle operation, including clutch operation.
- Check automatic transaxle/dual clutch transmission P (Park) function.
- Check parking brake.
- Check for fluid leaks under your vehicle (water dripping from the air conditioning system during or after use is normal).

At least monthly:

- Check coolant level in the engine coolant reservoir.
- Check the operation of all exterior lights, including the stoplights, turn signals and hazard warning flashers.

- Check the inflation pressures of all tires including the spare for tires that are worn, show uneven wear, or are damaged.
- Check for loose wheel lug nuts.

At least twice a year (i.e., every spring and fall):

- Check radiator, heater and air conditioning hoses for leaks or damage.
- Check windshield washer spray and wiper operation. Clean wiper blades with clean cloth dampened with washer fluid.
- Check headlight alignment.
- Check muffler, exhaust pipes, shields and clamps.
- Check the lap/shoulder belts for wear and function.

At least once a year:

- Clean body and door drain holes.
- Lubricate door hinges and checks, and hood hinges.
- Lubricate door and hood locks and latches.
- Lubricate door rubber weatherstrips.
- Check the air conditioning system.
- Inspect and lubricate automatic transaxle/dual clutch transmission linkage and controls.
- Clean battery and terminals.
- Check the brake (and clutch) fluid level.

SCHEDULED MAINTENANCE SERVICE

Follow Normal Maintenance Schedule if the vehicle is usually operated where none of the following conditions apply. If any of the following conditions apply, follow Maintenance Under Severe Usage Conditions.

- Repeated driving short distance of less than 8 km (5 miles) in normal temperature or less than 16 km (10 miles) in freezing temperature.
- Extensive engine idling or low speed driving for long distances.
- Driving on rough, dusty, muddy, unpaved, graveled or salt-spread roads.
- Driving in areas using salt or other corrosive materials or in very cold weather.
- Driving in heavy dust condition.
- Driving in heavy traffic area.
- Driving on uphill, downhill, or mountain road repeatedly.
- Towing a trailer or using a camper, or roof rack.
- Driving as a patrol car, taxi, other commercial use of vehicle towing.
- Driving over 170 km/h (106 mph).
- Frequently driving in stop-and-go condition.

If your vehicle is operated under the above conditions, you should inspect, replace or refill more frequently than the following Normal Maintenance Schedule. After the periods or distance shown in the chart, continue to follow the prescribed maintenance intervals.

Normal Maintenance Schedule – For Europe (Except Russia)

The following maintenance services must be performed to ensure good emission control and performance. Keep receipts for all vehicle emission services to protect your warranty. Where both mileage and time are shown, the frequency of service is deter mined by whichever occurs first.

No.	ITEM	REMARK
*1	Engine oil and engine oil filter	• Check the engine oil level and leak every 500 km (350 miles) or before starting a long trip. • If the recommended oil and oil filter are not available, replace engine oil and filter every 15,000 km (10,000 miles) or 12 months for GDI engine. • The engine oil level should be checked regularly and maintained properly. Operating with an insufficient amount of oil can damage the engine, and such damage is not covered by warranty.
*2	Engine oil and engine oil filter (For Diesel Engine)	• If the recommended oil is not available, replace engine oil and engine oil filter every 20,000 km (13,000 miles) or 12 months. • The engine oil level should be checked regularly and maintained properly. Operating with an insufficient amount of oil can damage the engine, and such damage is not covered by warranty. • This maintenance schedule depends on fuel quality. It is applicable only when using a qualified fuel <"EN590 or equivalent">. If the diesel fuel specifications don't meet the EN590, it must be replaced according to the severe maintenance schedule.
*3	Coolant (Engine)	When adding coolant, use only deionized water or soft water for your vehicle and never mix hard water in the coolant filled at the factory. An improper coolant mixture can result in serious malfunction or engine damage.

No.	ITEM	REMARK
*4	Drive belts (Engine)	• Adjust alternator, water pump and air conditioner (if equipped) drive belt. Inspect and if necessary repair or replace. • Inspect drive belt tensioner, idler and alternator pulley and if necessary correct or replace.
*5	Valve clearance	Inspect for excessive valve noise and/or engine vibration and adjust if necessary. In this case, have the system checked by a professional workshop. Kia recommends to visit an authorized Kia dealer/service partner.
*6	Spark plug	For your convenience, it can be replaced prior to it's interval when you do maintenance of other items.
*7	Transaxle fluid	Manual transaxle fluid and dual clutch transmission fluid should be changed anytime they have been submerged in water.
*8	Fuel additives (Gasoline)	Kia recommends that you use unleaded petrol which has an octane rating of RON (Research Octane Number) 95 / AKI (Anti Knock Index) 91 or higher (for Europe) or Octane Rating of RON (Research Octane Number) 91 / AKI (Anti-Knock Index) 87 or higher (except Europe). For customers who do not use good quality gasolines including fuel additives regularly, and have problems starting or the engine does not run smoothly, one bottle of additives added to the fuel tank at every 15,000 km (10,000 miles) (for Europe, Australia and New Zealand)/ 10,000 km (6,500 miles) (except Europe, Australia and New Zealand, China) / 5,000 km (3,000 miles) (for China). Additives are available from a professional workshop along with information on how to use them. Kia recommends to visit an authorized Kia dealer/service partner. Do not mix other additives.

No.	ITEM	REMARK
*9	Fuel filter cartridge (Diesel)	This maintenance schedule depends on fuel quality. It is applicable only when using a qualified fuel <"EN590 or equivalent">. If the diesel fuel specifications don't meet the EN590, it must be replaced more frequently. If there are some important safety matters like fuel flow restriction, surging, loss of power, hard starting problem etc., replace the fuel filter immediately regardless of maintenance schedule and consult a professional workshop for more details. Kia recommends to consult an authorized Kia dealer/service partner.

Normal Maintenance Schedule – For Europe (Except Russia) (Continue)

MAINTENANCE INTERVALS		Number of months or driving distance, whichever comes first							
	Months	24	48	72	96	120	144	168	192
	Miles×1,000	20	40	60	80	100	120	140	160
	Km×1,000	30	60	90	120	150	180	210	240
MAINTENANCE ITEM									
Engine oil and engine oil filter [*1,*2]	Gasoline, Diesel	R	R	R	R	R	R	R	R
Coolant (Engine) [*3]	Gasoline, Diesel	At first, replace 210,000 km (140,000 miles) or 120 months After that, replace every 30,000 km (20,000 miles) or 24 months							
Drive belts (Engine)[*4]	Gasoline	At first, 90,000 km (60,000 miles) or 72 months After that, every 30,000 km (20,000 miles) or 24 months							
	Diesel	At first inspect, 60,000 km (40,000 miles) or 48 months After that, inspect every 30,000 km (20,000 miles) or 24 months							
Valve clearance (Except for Nu 2.0 Engine) [*5]	Gasoline	-	-	I	-	-	I	-	-
Vacuum hoses and crankcase ventilation hoses	Gasoline	I	I	I	I	I	I	I	I

MAINTENANCE INTERVALS		Number of months or driving distance, whichever comes first							
		Months	24	48	72	96	120	144	168	192
		Miles×1,000	20	40	60	80	100	120	140	160
		Km×1,000	30	60	90	120	150	180	210	240
MAINTENANCE ITEM										
Spark plugs [*6]	Gasoline	Iridium	Replace every 150,000 km (100,000 miles) or 120 months							
		Nickel	-	R	-	R	-	R	-	R
Automatic transaxle fluid (if equipped)	Gasoline, Diesel		No check, No service required							
Manual transaxle fluid (if equipped)[*7]	Gasoline, Diesel		-	I	-	I	-	I	-	I
Dual clutch transmission fluid (if equipped) [*7]	Gasoline, Diesel		-	I	-	I	-	I	-	I
Drive shafts and boots	Gasoline, Diesel		I	I	I	I	I	I	I	I
Fuel additives [*8]	Gasoline		Add every 15,000 km (10,000 miles) or 12 months							
Fuel lines, hoses and connections	Gasoline		-	I	-	I	-	I	-	I
	Diesel		I	I	I	I	I	I	I	I
Fuel tank air filter (if equipped)	Gasoline		-	I	-	I	-	I	-	I
Vapor hose and fuel filler cap	Gasoline		-	I	-	I	-	I	-	I
Fuel filler cap	Diesel		-	I	-	I	-	I	-	I
Fuel filter cartridge [*9]	Diesel		I	R	I	R	I	R	I	R

MAINTENANCE INTERVALS		Number of months or driving distance, whichever comes first							
		Months	24	48	72	96	120	144	168	192
		Miles×1,000	20	40	60	80	100	120	140	160
		Km×1,000	30	60	90	120	150	180	210	240
MAINTENANCE ITEM										
Air cleaner filter	Gasoline, Diesel		I	R	I	R	I	R	I	R
Exhaust system	Gasoline, Diesel		I	I	I	I	I	I	I	I
Cooling system	Gasoline, Diesel		At first, inspect 60,000 km (40,000 miles) or 48 months After that, inspect every 30,000 km (20,000 miles) or 24 months							
Air conditioner refrigerant/ compressor (if equipped)	Gasoline, Diesel		I	I	I	I	I	I	I	I
Climate control air filter (if equipped)	Gasoline, Diesel		R	R	R	R	R	R	R	R
Brake discs and pads	Gasoline, Diesel		I	I	I	I	I	I	I	I
Brake lines, hoses and connections	Gasoline, Diesel		I	I	I	I	I	I	I	I
Brake/clutch (if equipped) fluid	Gasoline, Diesel		R	R	R	R	R	R	R	R
Parking brake (Hand type)	Gasoline, Diesel		I	I	I	I	I	I	I	I
Steering gear rack, linkage and boots	Gasoline, Diesel		I	I	I	I	I	I	I	I
Suspension ball joints	Gasoline, Diesel		I	I	I	I	I	I	I	I

MAINTENANCE INTERVALS		Number of months or driving distance, whichever comes first							
		Months	24	48	72	96	120	144	168	192
		Miles×1,000	20	40	60	80	100	120	140	160
		Km×1,000	30	60	90	120	150	180	210	240
MAINTENANCE ITEM										
Tire (pressure & tread wear)	Gasoline, Diesel		I	I	I	I	I	I	I	I
Battery condition	Gasoline, Diesel		I	I	I	I	I	I	I	I
All electrical system	Gasoline, Diesel		I	I	I	I	I	I	I	I

I: Inspect and if necessary, adjust, correct, clean or replace.
R: Replace or change.

Maintenance Under Severe Usage Conditions For Europe (Except Russia)

The following items must be serviced more frequently on cars mainly used under severe driving conditions.
Refer to the chart below for the appropriate maintenance intervals.

Maintenance item		Maintenance operation	Maintenance intervals	Driving condition
Engine oil and engine oil filter	Gasoline *1	R	Every 15,000 km (10,000 miles) or 12 months	A, B, C, D, E, F, G, H, I, J, K
	Diesel *2	R	Every 15,000 km (10,000 miles) or 12 months	A, B, C, F, G, H, I, J, K
Spark plugs	Gasoline	R	Replace more frequently depending on the condition	B, H, I, K
Manual transaxle fluid (if equipped)	Gasoline, Diesel	R	Every 120,000 km (80,000 miles)	C, D, E, F, G, H, I, K
Automatic transaxle fluid (if equipped)	Gasoline, Diesel	R	Every 90,000 km (60,000 miles)	A, C, D, E, F, G, H, I, K
Dual clutch transmission fluid (if equipped)	Gasoline, Diesel	R	Every 120,000 km (80,000 miles)	C, D, E, F, G, H, I, K
Drive shaft and boots	Gasoline, Diesel	I	Inspect more frequently depending on the condition	C, D, E, F, G, H, I, J, K
Air cleaner filter	Gasoline, Diesel	R	Replace more frequently depending on the condition	C, E

Maintenance item		Maintenance operation	Maintenance intervals	Driving condition
Climate control air filter	Gasoline, Diesel	R	Replace more frequently depending on the condition	C, E, G
Brake discs and pads, calipers and rotors	Gasoline, Diesel	I	Inspect more frequently depending on the condition	C, D, E, G, H
Parking brake (Hand type)	Gasoline, Diesel	I	Inspect more frequently depending on the condition	C, D, G, H
Steering gear rack, linkage and boots	Gasoline, Diesel	I	Inspect more frequently depending on the condition	C, D, E, F, G
Front suspension ball joints	Gasoline, Diesel	I	Inspect more frequently depending on the condition	C, D, E, F, G

*1 :If the recommended oil and oil filter are not available, replace engine oil and engine oil filter every 7,500 km or 6 months for GDI engine.
*2 :If the recommended oil is not available, replace engine oil and engine oil filter every 10,000 km or 6 months.

I: Inspect and if necessary, adjust, correct, clean or replace
R: Replace

SEVERE DRIVING CONDITIONS
A: Repeatedly driving short distance of less than 8 km (5 miles) in normal temperature or less than 16 km (10 miles) in freezing temperature.
B: Extensive engine idling or low speed driving for long distances.
C: Driving on rough, dusty, muddy, unpaved, graveled or saltspread roads.

D: Driving in areas using salt or other corrosive materials or in very cold weather.
E: Driving in heavy dust condition.
F: Driving in heavy traffic area.
G: Driving on uphill, downhill, or mountain roads repeatedly.
H: Towing a trailer or using a camper on roof rack.
I: Driving for patrol car, taxi, commercial car or vehicle towing.
J: Driving over 170 km/h (106 mile/h).
K: Frequently driving in stop-and-go conditions.

Normal Maintenance Schedule – Except Europe (Including Russia)

The following maintenance services must be performed to ensure good emission control and performance. Keep receipts for all vehicle emission services to protect your warranty. Where both mileage and time are shown, the frequency of service is deter mined by whichever occurs first.

NO.	ITEM	REMARK
*1	Engine oil and engine oil filter	• Check the engine oil level and leak every 500 km (350 miles) or before starting a long trip. • The engine oil level should be checked regularly and maintained properly. Operating with an insufficient amount of oil can damage the engine, and such damage is not covered by warranty.
*2	Engine oil and engine oil filter (For Diesel Engine)	• If the recommended oil is not available, replace engine oil and engine oil filter every 20,000 km (13,000 miles) or 12 months. • The engine oil level should be checked regularly and maintained properly. Operating with an insufficient amount of oil can damage the engine, and such damage is not covered by warranty. • This maintenance schedule depends on fuel quality. It is applicable only when using a qualified fuel <"EN590 or equivalent">. If the diesel fuel specifications don't meet the EN590, it must be replaced according to the severe maintenance schedule.
*3	Coolant (Engine)	When adding coolant, use only deionized water or soft water for your vehicle and never mix hard water in the coolant filled at the factory. An improper coolant mixture can result in serious malfunction or engine damage.
*4	Drive belts (Engine)	• Adjust alternator, water pump and air conditioner (if equipped) drive belt. Inspect and if necessary repair or replace. • Inspect drive belt tensioner, idler and alternator pulley and if necessary correct or replace.

NO.	ITEM	REMARK
*5	Valve clearance	Inspect for excessive valve noise and/or engine vibration and adjust if necessary. In this case, have the system checked by a professional workshop. Kia recommends to visit an authorized Kia dealer/service partner. (Except Nu 2.0 Engine)
*6	Spark plug	For your convenience, it can be replaced prior to it's interval when you do maintenance of other items.
*7	Transaxle fluid	Manual transaxle fluid and dual clutch transmission fluid should be changed anytime they have been submerged in water.
*8	Fuel additives (Gasoline)	Kia recommends that you use unleaded petrol which has an octane rating of RON (Research Octane Number) 95 / AKI (Anti Knock Index) 91 or higher (for Europe) or Octane Rating of RON (Research Octane Number) 91 / AKI (Anti-Knock Index) 87 or higher (except Europe). For customers who do not use good quality gasolines including fuel additives regularly, and have problems starting or the engine does not run smoothly, one bottle of additives added to the fuel tank at every 15,000 km (10,000 miles) (for Europe, Australia and New Zealand)/ 10,000 km (6,500 miles) (except Europe, Australia and New Zealand, China) / 5,000 km (3,000 miles) (for China). Additives are available from a professional workshop along with information on how to use them. Kia recommends to visit an authorized Kia dealer/service partner. Do not mix other additives.
*9	Fuel filter cartridge (Diesel)	This maintenance schedule depends on fuel quality. It is applicable only when using a qualified fuel <"EN590 or equivalent">. If the diesel fuel specifications don't meet the EN590, it must be replaced more frequently. If there are some important safety matters like fuel flow restriction, surging, loss of power, hard starting problem etc., replace the fuel filter immediately regardless of maintenance schedule and consult a professional workshop for more details. Kia recommends to consult an authorized Kia dealer/service partner.

NO.	ITEM	REMARK
*10	Drive belts (Diesel) Engine oil and oil filter (Gasoline)	Middle East includes Libya, Algeria, Morocco, Tunisia, Sudan, Egypt and Iran.

Normal Maintenance Schedule – Except Europe (Including Russia) (Continue)

MAINTENANCE INTERVALS		Normal Maintenance Schedule - Except Europe (Including Russia) Number of months or driving distance, whichever comes first								
		Months	12	24	36	48	60	72	84	96
		Miles×1,000	10	20	30	40	50	60	70	80
		Km×1,000	15	30	45	60	75	90	105	120
MAINTENANCE ITEM										
Engine oil and engine oil filter *1 *10	Gasoline	For Middle East	Replace every 10,000 km (6,500 miles) or 12 months							
Engine oil and engine oil filter *1	Gasoline	For China	Replace every 5,000 km (3,000 miles) or 6 months							
Engine oil and engine oil filter *1 *10	Gasoline	Except Middle East and China	R	R	R	R	R	R	R	R
Engine oil and engine oil filter *1	Diesel	For Russia	R	R	R	R	R	R	R	R
Engine oil and engine oil filter *1	Diesel	Except Russia	Replace every 10,000 km (6,500 miles) or 12 months							
Coolant (Engine) *3	Gasoline, Diesel		At first, 200,000 km (130,000 miles) or 120 months After that, every 40,000 km (26,000 miles) or 24 months							
Drive belts (Engine)*4	Gasoline		-	I	-	I	-	I	-	I
	Diesel		At first, inspect 60,000 km (40,000 miles) or 48 months After that, inspect every 30,000 km (20,000 miles) or 24 months							
Valve clearance (Except for Nu 2.0 Engine) *5	Gasoline		Inspect every 90,000 km (60,000 miles) or 72 months							

MAINTENANCE INTERVALS			Normal Maintenance Schedule – Except Europe (Including Russia)							
			Number of months or driving distance, whichever comes first							
		Months	12	24	36	48	60	72	84	96
		Miles×1,000	10	20	30	40	50	60	70	80
		Km×1,000	15	30	45	60	75	90	105	120
MAINTENANCE ITEM										
Vacuum hoses and crank-case ventilation hoses	Gasoline		–	I	–	I	–	I	–	I
Spark plugs *6	Gasoline	Iridium	Replace every 150,000 km (100,000 miles) or 120 months							
		Nickel	–	–	–	R	–	–	–	R
Automatic transaxle fluid (if equipped)	Gasoline, Diesel		No check, No service required							
Manual transaxle fluid (if equipped) *7	Gasoline, Diesel		–	–	–	I	–	–	–	I
Dual clutch transmission fluid (if equipped) *7	Gasoline, Diesel		–	–	–	I	–	–	–	I
Drive shafts and boots	Gasoline, Diesel		–	I	–	I	–	I	–	I
Fuel additives *8	Gasoline	Except China	Add every 10,000 km (6,500 miles) or 6 months							
		For China	Add every 5,000 km (3,000 miles) or 6 months							
Fuel filter	Gasoline	For China	–	I	–	R	–	I	–	R
Fuel lines, hoses and connections	Gasoline		–	–	–	I	–	–	–	I
	Diesel		–	I	–	I	–	I	–	I

MAINTENANCE INTERVALS		Normal Maintenance Schedule – Except Europe (Including Russia)							
		Number of months or driving distance, whichever comes first							
	Months	12	24	36	48	60	72	84	96
	Miles×1,000	10	20	30	40	50	60	70	80
	Km×1,000	15	30	45	60	75	90	105	120
MAINTENANCE ITEM									
Fuel tank air filter (if equipped)	Gasoline	–	I	–	R	–	I	–	R
Vapor hose and fuel filler cap	Gasoline	–	–	–	I	–	–	–	I
Fuel filler cap	Diesel	–	–	–	I	–	–	–	I
Fuel filter cartridge *9	Diesel	–	I	–	R	–	I	–	R
Air cleaner filter	Gasoline, Diesel – Except Middle East, China, India	I	I	R	I	I	R	I	I
	Gasoline, Diesel – For Middle East, China, India	R	R	R	R	R	R	R	R
Exhaust system	Gasoline, Diesel	–	I	–	I	–	I	–	I
Cooling system	Gasoline, Diesel	At first, Inspect 60,000 km (40,000 miles) or 48 months After that, Inspect every 30,000 km (20,000 miles) or 24 months							
Air conditioner refrigerant/ compressor (if equipped)	Gasoline, Diesel	I	I	I	I	I	I	I	I
Climate control air filter (if equipped)	Gasoline, Diesel	R	R	R	R	R	R	R	R

MAINTENANCE INTERVALS		Normal Maintenance Schedule – Except Europe (Including Russia)							
		Number of months or driving distance, whichever comes first							
	Months	12	24	36	48	60	72	84	96
	Miles×1,000	10	20	30	40	50	60	70	80
	Km×1,000	15	30	45	60	75	90	105	120
MAINTENANCE ITEM									
Brake discs and pads	Gasoline, Diesel	–	I	–	I	–	I	–	I
Brake lines, hoses and connections	Gasoline, Diesel	–	I	–	I	–	I	–	I
Brake/clutch (if equipped) fluid	Gasoline, Diesel	–	I	–	I	–	I	–	I
Parking brake (Hand type)	Gasoline, Diesel	–	I	–	I	–	I	–	I
Steering gear rack, linkage and boots	Gasoline, Diesel	I	I	I	I	I	I	I	I
Suspension ball joints	Gasoline, Diesel	I	I	I	I	I	I	I	I
Tire (pressure & tread wear)	Gasoline, Diesel	I	I	I	I	I	I	I	I
Battery condition	Gasoline, Diesel	I	I	I	I	I	I	I	I
All electrical system	Gasoline, Diesel	–	I	–	I	–	I	–	I

I: Inspect and if necessary, adjust, correct, clean or replace.
R: Replace or change.

Maintenance Under Severe Usage Conditions – Except Europe (Including Russia)

The following items must be serviced more frequently on cars mainly used under severe driving conditions.
Refer to the chart below for the appropriate maintenance intervals.

Maintenance item			Maintenance operation	Maintenance intervals	Driving condition
Engine oil and engine oil filter	Gasoline	Except Middle East	R	Every 7,500 km (5,000 miles) or 6 months	A, B, C, D, E, F, G, H, I, J, K
		For Middle East	R	Every 5,000 km (3,000 miles) or 6 months	
		For China	R	Every 5,000 km (3,000 miles) or 3 months	
	Diesel	For Russia	R	Every 7,500 km (5,000 miles) or 6 months	A, B, C, F, G, H, I, J, K
		Except Russia	R	Every 5,000 km (3,000 miles) or 6 months	
Spark plugs	Gasoline		R	Replace more frequently depending on the condition	B, H, I, K
Manual transaxle fluid (if equipped)	Gasoline, Diesel		R	Every 120,000 km (80,000 miles)	C, D, E, G, H, I, J
Automatic transaxle fluid (if equipped)	Gasoline, Diesel		R	Every 100,000 km (65,000 miles)	A, C, D, E, F, G, H, I, J, K
Dual clutch transmission fluid (if equipped)	Gasoline, Diesel		R	Every 120,000 km (80,000 miles)	C, D, E, G, H, I, J
Driveshaft and boots	Gasoline, Diesel		I	Inspect more frequently depending on the condition	C, D, E, F, G, H, I, J

Maintenance item		Maintenance operation	Maintenance intervals	Driving condition
Air cleaner filter	Gasoline, Diesel	R	Replace more frequently depending on the condition	C, E
Climate control air filter	Gasoline, Diesel	R	Replace more frequently depending on the condition	C, E, G
Brake discs and pads, calipers and rotors	Gasoline, Diesel	I	Inspect more frequently depending on the condition	C, D, E, G, H
Parking brake (Hand type)	Gasoline, Diesel	I	Inspect more frequently depending on the condition	C, D, G, H
Steering gear rack, linkage and boots	Gasoline, Diesel	I	Inspect more frequently depending on the condition	C, D, E, F, G
Front suspension ball joints	Gasoline, Diesel	I	Inspect more frequently depending on the condition	C, D, E, F, G

I: Inspect and if necessary, adjust, correct, clean or replace
R: Replace

SEVERE DRIVING CONDITIONS
A: Repeatedly driving short distance of less than 8 km (5 miles) in normal temperature or less than 16 km (10 miles) in freezing temperature.
B: Extensive engine idling or low speed driving for long distances.
C: Driving on rough, dusty, muddy, unpaved, graveled or salt-spread roads.
D: Driving in areas using salt or other corrosive materials or in very cold weather.
E: Driving in heavy dust condition.
F: Driving in heavy traffic area.
G: Driving on uphill, downhill, or mountain roads repeatedly.
H: Towing a trailer or using a camper on roof rack.
I: Driving for patrol car, taxi, commercial car or vehicle towing.

J: Driving over 170 km/h (106 mile/h).
K: Frequently driving in stop-and-go conditions.

EXPLANATION OF SCHEDULED MAINTENANCE ITEMS

Engine oil and filter

The engine oil and filter should be changed at the intervals specified in the maintenance schedule. If the car is being driven in severe conditions, more frequent oil and filter changes are required.

Drive belts

Inspect all drive belts for evidence of cuts, cracks, excessive wear or oil saturation and replace if necessary. Drive belts should be checked periodically for proper tension and adjusted as necessary.

⚠ CAUTION

When you are inspecting the belt, place the ignition switch in the LOCK/OFF or ACC position.

Fuel filter cartridge (for diesel)

A clogged filter can limit the speed at which the vehicle may be driven, damage the emission system and cause multiple issues such as hard starting. If an excessive amount of foreign matter accumulates in the fuel tank, the filter may require replacement more frequently.
After installing a new filter, run the engine for several minutes, and check for leaks at the connections. Have the fuel filter replaced by a professional workshop. Kia recommends to visit an authorized Kia dealer/service partner.

Fuel filter (for gasoline)

Kia gasoline vehicle is equipped a lifetime fuel filter that integrated with the fuel tank. Regular maintenance or replacement is not needed but depends on fuel quality. If there are some important safety matters like fuel flow restriction, surging, loss of power, hard starting problem etc, fuel filter inspection or replace is needed.
Have the fuel filter inspected or replaced by a professional workshop. Kia recommends to visit an authorized Kia dealer/service partner.

Fuel lines, fuel hoses and connections

Check the fuel lines, fuel hoses and connections for leakage and damage. Have the fuel lines, fuel hoses and connections replaced by a professional workshop. Kia recommends to visit an authorized Kia dealer/service partner.

⚠ WARNING

■ Diesel only

Never work on injection system with engine running or within 30 seconds after shutting off engine. High pressure pump, rail, injectors and high pressure pipes are subject to high pressure even after the engine stopped. The fuel jet produced by fuel leaks may cause serious injury, if it touch the body. People using pacemakers should not move more than 30 cm closer to the ECU or wiring harness within the engine room while engine is running, since the high currents in the Common Rail system produce considerable magnetic fields.

Vapor hose and fuel filler cap

The vapor hose and fuel filler cap should be inspected at those intervals specified in the maintenance schedule. Make sure that a new vapor hose or fuel filler cap is correctly replaced.

Vacuum crankcase ventilation hoses (if equipped)

Inspect the surface of hoses for evidence of heat and/or mechanical damage. Hard and brittle rubber, cracking, tears, cuts, abrasions, and excessive swelling indicate deterioration. Particular attention should be paid to examine those hose surfaces nearest to high heat sources, such as the exhaust manifold.

Inspect the hose routing to assure that the hoses do not come in contact with any heat source, sharp edges or moving component which might cause heat damage or mechanical wear. Inspect all hose connections, such as clamps and couplings, to make sure they are secure, and that no leaks are present. Hoses should be replaced immediately if there is any evidence of deterioration or damage.

Air cleaner filter

Have the air cleaner filter replaced by a professional workshop. Kia recommends to visit an authorized Kia dealer/service partner.

Spark plugs (for gasoline engine)

Make sure to install new spark plugs of the correct heat range.

⚠ WARNING

Do not disconnect and inspect spark plugs when the engine is hot. You may burn yourself.

Valve clearance (for gasoline engine) (Except for Nu 2.0 Engine)

Inspect excessive valve noise and/or engine vibration and adjust if necessary. In this case, have the system serviced by a professional workshop. Kia recommends to visit an authorized Kia dealer/service partner.

Cooling system

Check the cooling system parts, such as radiator, coolant reservoir, hoses and connections for leakage and damage. Replace any damaged parts.

Coolant

The coolant should be changed at the intervals specified in the maintenance schedule.

Manual transaxle fluid (if equipped)

Inspect the manual transaxle fluid according to the maintenance schedule.

Automatic transaxle fluid (if equipped)

Automatic transaxle fluid should not be checked under normal usage conditions. But in severe conditions, have the automatic transmission fluid changed by a professional workshop according to the maintenance schedule. Kia recommends to visit an authorized Kia dealer/service partner.

✻ NOTICE

Automatic transaxle fluid color is basically red.
As the vehicle is driven, the automatic transaxle fluid will begin to look darker.
It is normal condition and you should not judge the need to replace the fluid based upon the changed color.

⚠ CAUTION

The use of a non-specified fluid could result in transaxle malfunction and failure.
Use only specified automatic transaxle fluid. (Refer to "Recommended lubricants and capacities" on page 9-11.)

Dual clutch transmission fluid (if equipped)

Inspect the dual clutch transmission fluid according to the maintenance schedule.

Brake hoses and lines

Visually check for proper installation, chafing, cracks, deterioration and any leakage. Replace any deteriorated or damaged parts immediately.

Brake fluid

Check brake fluid level in the brake fluid reservoir. The level should be between "MIN" and "MAX" marks on the side of the reservoir. Use only hydraulic brake fluid conforming to DOT 3 or DOT 4 specification.

Brake pads, calipers and rotors

Check the pads for excessive wear, discs for run out and wear, and calipers for fluid leakage.
For more information on checking the pads or lining wear limit, refer to the Kia web site.
(https://www.kia-hotline.com)

Suspension mounting bolts

Check the suspension connections for looseness or damage. Retighten to the specified torque.

Parking brake

Inspect the parking brake system including the EPB actuator, wiring and connectors.

Steering gear box, linkage & boots/lower arm ball joint

With the vehicle stopped and engine off, check for excessive free-play in the steering wheel.
Check the linkage for bends or damage. Check the dust boots and ball joints for deterioration, cracks, or damage. Replace any damaged parts.

Drive shafts and boots

Check the drive shafts, boots and clamps for cracks, deterioration, or damage. Replace any damaged parts and, if necessary, repack the grease.

Air conditioning refrigerant/ compressor (if equipped)

Check the air conditioning lines and connections for leakage and damage.

ENGINE OIL (GASOLINE)

Checking the engine oil level

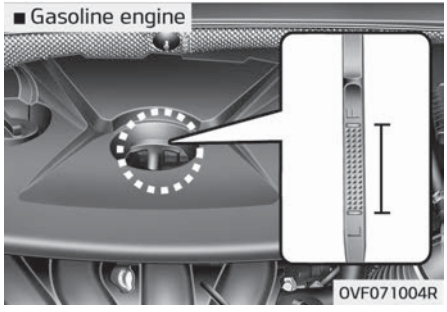

1. Be sure the vehicle is on level ground.
2. Start the engine and allow it to reach normal operating temperature.
3. Turn the engine off and wait for a few minutes (about 5 minutes) for the oil to return to the oil pan.
4. Pull the dipstick out, wipe it clean, and re-insert it fully.

⚠ WARNING

■ Radiator hose

Be very careful not to touch the radiator hose when checking or adding the engine oil as it may be hot enough to burn you.

5. Pull the dipstick out again and check the level. The level should be between F and L.

⚠ CAUTION

- **Do not overfill the engine oil. It may damage the engine.**
- **Do not spill engine oil, when adding or changing engine oil. If you drop the engine oil on the engine room, wipe it off immediately.**
- **When you wipe the oil level gauge, you should wipe it with a clean cloth. When mixed with debris, it can cause engine damage.**

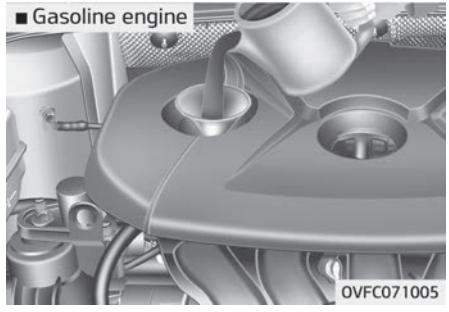

If it is near or at L, add enough oil to bring the level to F. **Do not overfill.**
Use a funnel to help prevent oil from being spilled on engine components.
Use only the specified engine oil. (Refer to "Recommended lubricants and capacities" on page 9-11.)

Changing the engine oil and filter

Have the engine oil and filter replaced by a professional workshop. Kia recommends to visit an authorized Kia dealer/service partner.

⚠ WARNING

Used engine oil may cause irritation or cancer of the skin if left in contact with the skin for prolonged periods of time. Used engine oil contains chemicals that have caused cancer in laboratory animals. Always protect your skin by washing your hands thoroughly with soap and warm water as soon as possible after handling used oil.

ENGINE OIL (DIESEL)

Checking the engine oil level

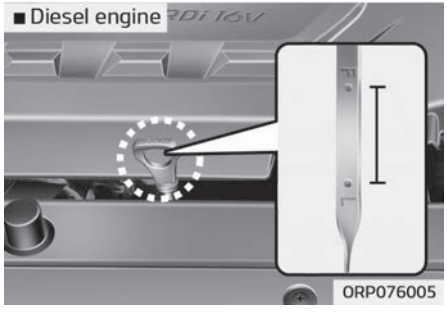

1. Be sure the vehicle is on level ground.
2. Start the engine and allow it to reach normal operating temperature.
3. Turn the engine off and wait for a few minutes (about 5 minutes) for the oil to return to the oil pan.
4. Pull the dipstick out, wipe it clean, and reinsert it fully.

⚠ WARNING

■ Radiator hose

Be very careful not to touch the radiator hose when checking or adding the engine oil as it may be hot enough to burn you.

5. Pull the dipstick out again and check the level. The level should be between F (Full) and L (Low).

⚠ CAUTION

- **Do not spill engine oil, when adding or changing engine oil. If you drop the engine oil on the engine room, wipe it off immediately.**
- **When you wipe the oil level gauge, you should wipe it with a clean cloth. When mixed with debris, it can cause engine damage.**

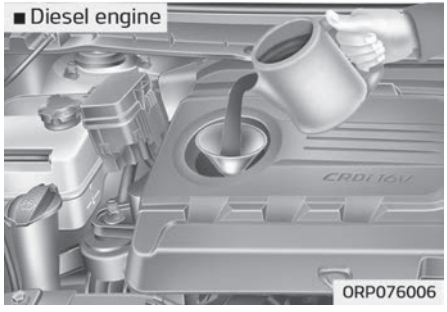

If it is near or at L (Low), add enough oil to bring the level to F (Full). Do not overfill.
Use only the specified engine oil (Refer to "Recommended lubricants and capacities" on page 9-11.)

Changing the engine oil and filter

Have the engine oil and filter replaced by a professional workshop. Kia recommends to visit an authorized Kia dealer/service partner.

⚠ WARNING

Used engine oil may cause skin irritation or cancer if left in contact with the skin for prolonged periods of time. Used engine oil contains chemicals that have caused cancer in laboratory animals. Always protect your skin by washing your hands thoroughly with soap and warm water as soon as possible after handling used oil.

ENGINE COOLANT

The high-pressure cooling system has a reservoir filled with year-round anti-freeze coolant. The reservoir is filled at the factory.
Check the antifreeze protection and coolant concentration level at least once a year, at the beginning of the winter season, and before traveling to a colder climate.

⚠ CAUTION

- **When the engine overheats from low engine coolant, suddenly adding engine coolant may cause cracks in the engine. To prevent damage, add engine coolant slowly in small quantities.**
- **Do not drive with no engine coolant. It may cause water pump failure and engine seizure, etc.**

Checking the coolant level

⚠ WARNING



Removing radiator cap

- **Never attempt to remove the radiator cap while the engine is operating or hot. Doing so might lead to cooling system and engine damage and could result in serious personal injury from escaping hot coolant or steam.**
- **Turn the engine off and wait until it cools down. Use extreme care when removing the radiator cap. Wrap a thick towel around it, and turn it counterclockwise slowly to the first stop. Step back while the pressure is released from the cooling system.**
  When you are sure all the pressure has been released, press down on the cap, using a thick towel, and continue turning counterclockwise to remove it.

(Continued)

(Continued)

- **Even if the engine is not operating, do not remove the radiator cap or the drain plug while the engine and radiator are hot. Hot coolant and steam may still blow out under pressure, causing serious injury.**

⚠ WARNING



The electric motor (cooling fan) is controlled by engine coolant temperature, refrigerant pressure and vehicle speed.

It may sometimes operate even when the engine is not running. Use extreme caution when working near the blades of the cooling fan so that you are not injured by a rotating fan blades. As the engine coolant temperature decreases, the electric motor will automatically shut off. This is a normal condition.
If your vehicle is equipped with GDI, the electric motor (cooling fan) may operate until you disconnect the negative battery cable.

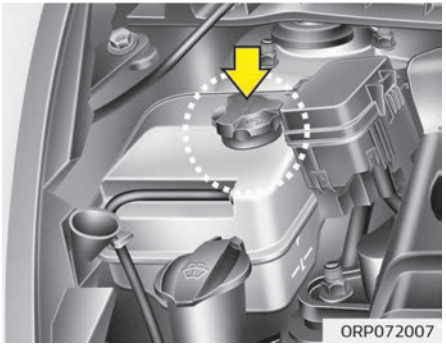

Check the condition and connections of all cooling system hoses and heater hoses. Replace any swollen or deteriorated hoses.
The coolant level should be filled between F (MAX) and L (MIN) marks on the side of the coolant reservoir when the engine is cool.
If the coolant level is low, add enough distilled (deionized) water. Bring the level to F (MAX), but do not overfill. If frequent coolant refill is required, have the system inspected by a professional workshop. Kia recommends to visit an authorized Kia dealer/service partner.

Recommended engine coolant

- When adding coolant, use only deionized water or soft water for your vehicle and never mix hard water in the coolant filled at the factory. An improper coolant mixture can result in serious malfunction or engine damage.
- The engine in your vehicle has aluminum engine parts and must be protected by an ethylene-glycol with phosphate based coolant to prevent corrosion and freezing.
- DO NOT USE alcohol or methanol coolant or mix them with the specified coolant.
- Do not use a solution that contains more than 60% antifreeze or less than 35% antifreeze, which would reduce the effectiveness of the solution.

For mixture percentage, refer to the following table.

Ambient Temperature	Mixture Percentage (volume)	
	Antifreeze	Water
-15 °C (5 °F)	35	65
-25 °C (-13 °F)	40	60
-35 °C (-31 °F)	50	50
-45 °C (-49 °F)	60	40

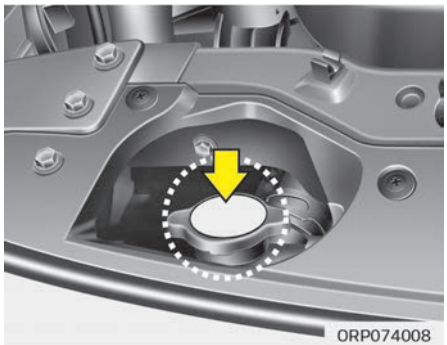

⚠ WARNING



Radiator cap

Do not remove the radiator cap when the engine and radiator are hot. Scalding hot coolant and steam may blow out under pressure causing serious injury.

⚠ WARNING

■ Coolant

- **Do not use radiator coolant or antifreeze in the washer fluid reservoir.**
- **Radiator coolant can severely obscure visibility when sprayed on the windshield and may cause loss of vehicle control or damage to paint and body trim.**

Changing the coolant

Have the coolant replaced by a professional workshop. Kia recommends to visit an authorized Kia dealer/service partner.

⚠ CAUTION

Put a thick cloth or fabric around the radiator cap before refilling the coolant in order to prevent the coolant from overflowing into engine parts such as generator.

BRAKE/CLUTCH FLUID (IF EQUIPPED)

Checking the brake/clutch fluid level

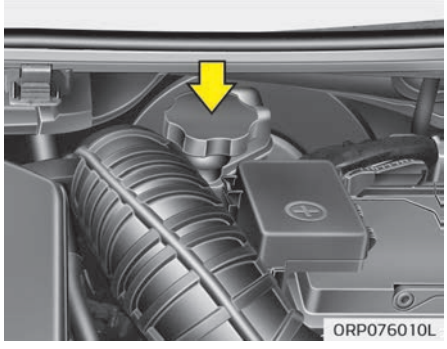

Check the fluid level in the reservoir periodically. The fluid level should be between MAX and MIN marks on the side of the reservoir.
Before removing the reservoir cap and adding brake/clutch fluid, clean the area around the reservoir cap thoroughly to prevent brake/clutch fluid contamination.
If the level is low, add fluid to the MAX level. The level will fall with accumulated mileage. This is a normal condition associated with the wear of the brake linings.

If the fluid level is excessively low, have the system checked by a professional workshop. Kia recommends to visit an authorized Kia dealer/service partner.

Use only the specified brake fluid. (Refer to "Recommended lubricants and capacities" on page 9-11.)

Never mix different types of fluid.

⚠ WARNING

■ Loss of brake/clutch fluid

In the event the brake/clutch system requires frequent additions of fluid, have the system inspected by a professional workshop. Kia recommends to visit an authorized Kia dealer/service partner.

⚠ WARNING

■ Brake/clutch fluid

When changing and adding brake/clutch fluid, handle it carefully. Do not let it come in contact with your eyes. If brake/clutch fluid should come in contact with your eyes, im-
(Continued)

(Continued)

mediately flush them with a large quantity of fresh tap water. Have your eyes examined by a doctor as soon as possible.

⚠ CAUTION

Do not allow brake/clutch fluid to contact the vehicle's body paint, as paint damage will result. Brake/clutch fluid, which has been exposed to open air for an extended time should never be used as its quality cannot be guaranteed. It should be properly disposed. Don't put in the wrong kind of fluid. A few drops of mineral-based oil, such as engine oil, in your brake/clutch system can damage brake/clutch system parts.

WASHER FLUID

Checking the washer fluid level

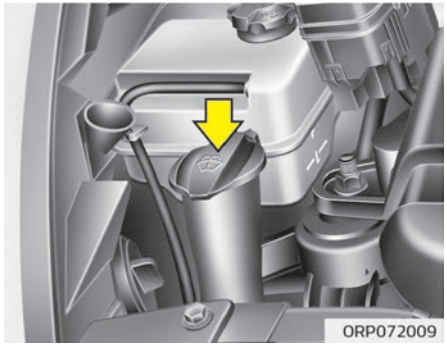

Check the fluid level in the washer fluid reservoir and add fluid if necessary. Plain water may be used if washer fluid is not available. However, use washer solvent with antifreeze characteristics in cold climates to prevent freezing.

⚠ WARNING

■ Coolant
(Continued)

(Continued)

- **Do not use radiator coolant or antifreeze in the washer fluid reservoir.**
- **Radiator coolant can severely obscure visibility when sprayed on the windshield and may cause loss of vehicle control or damage to paint and body trim.**
- **Windshield Washer fluid agents contain some amounts of alcohol and can be flammable under certain circumstances. Do not allow sparks or flame to contact the washer fluid or the washer fluid reservoir. Damage to the vehicle or occupants could occur.**
- **Windshield washer fluid is poisonous to humans and animals. Do not drink and avoid contacting windshield washer fluid. Serious injury or death could occur.**

PARKING BRAKE - HAND TYPE

Checking the parking brake

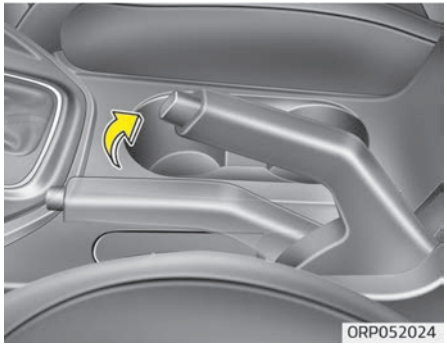

Check the stroke of the parking brake by counting the number of "clicks" heard while fully applying it from the released position. Also, the parking brake alone should securely hold the vehicle on a fairly steep grade. If the stroke is more or less than specified, have the system serviced by a professional workshop. Kia recommends to visit an authorized Kia dealer/service partner.

Stroke : 5~7 "clicks" at a force of 20 kg (44 lbs, 196 N).

FUEL FILTER (FOR DIESEL)

Draining water from fuel filter

The fuel filter for diesel engine plays an important role of separating water from fuel and accumulating the water in its bottom.
If water accumulates in the fuel filter, the warning light comes on when the ignition switch is in the ON position.



If this warning light illuminates, take your car to a professional workshop and have drain the water and check the system. Kia recommends to visit an authorized Kia dealer/service partner.

⚠ CAUTION

If the water accumulated in the fuel filter is not drained at proper times, damages to the major parts such as the fuel system can be caused by water permeation in the fuel filter.

AIR CLEANER

Filter replacement

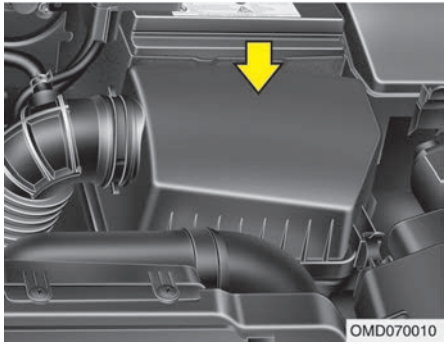

It must be replaced when necessary, and should not be washed.
You can clean the filter when inspecting the air cleaner element.
Clean the filter by using compressed air.

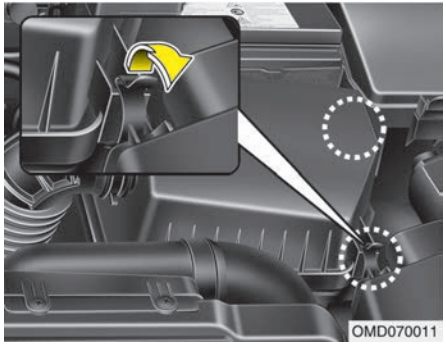

1. Loosen the air cleaner cover attaching clips and open the cover.

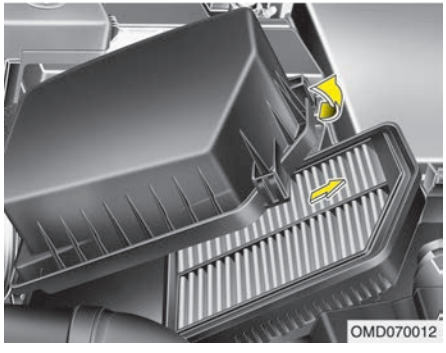

2. Wipe the inside of the air cleaner.
3. Replace the air cleaner filter.
4. Lock the cover with the cover attaching clips.

Replace the filter according to the Maintenance Schedule.

If the vehicle is operated in extremely dusty or sandy areas, replace the element more often than the usual recommended intervals. (Refer to "Maintenance under severe usage conditions" on page 8-19 .)

⚠ CAUTION

- **Do not drive with the air cleaner removed; this will result in excessive engine wear.**
- **When removing the air cleaner filter, be careful that dust or dirt does not enter the air intake, or damage may result.**
- **Use parts for replacement from a professional workshop. Kia recommends to visit an authorized Kia dealer/service partner.**

CLIMATE CONTROL AIR FILTER

Filter inspection

If the vehicle is operated in the severely air-polluted cities or on dusty rough roads for a long period, it should be inspected more frequently and replaced earlier. When you, the owner, replace the climate control air filter, replace it performing the following procedure, and be careful to avoid damaging other components.
Replace the filter according to the maintenance Schedule.

Filter replacement

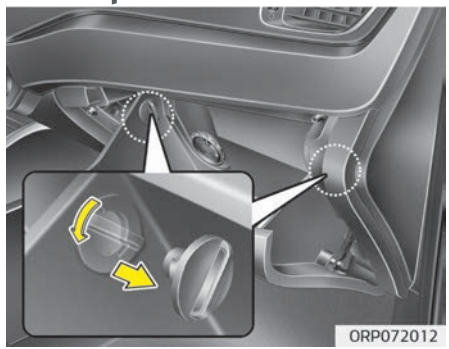

1. With the glove box open, remove the stoppers on both sides.

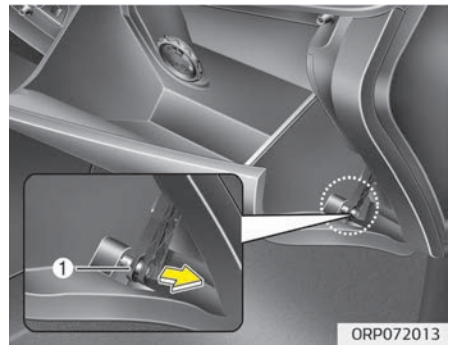

2. Open the glove box and remove the support strap (1).

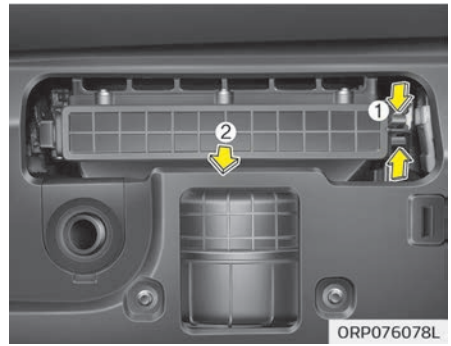

3. Remove the cover while pressing the right-side lock of the cover and remove the climate control air filter.

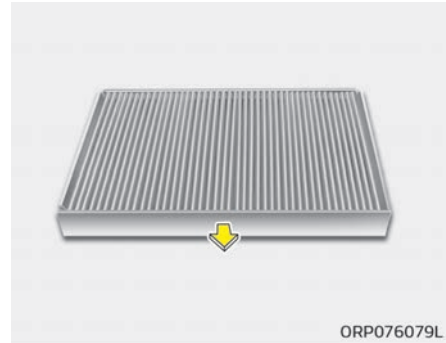

4. Replace the climate control air filter.
5. Reassemble in the reverse order of disassembly.

✻ NOTICE

When replacing the climate control air filter install it properly. Otherwise, the system may produce noise and the effectiveness of the filter may be reduced.

WIPER BLADES

Blade inspection



✻ NOTICE

Commercial hot waxes applied by automatic car washes have been known to make the windshield difficult to clean.

Contamination of either the windshield or the wiper blades with foreign matter can reduce the effectiveness of the windshield wipers. Common sources of contamination are insects, tree sap, and hot wax treatments used by some commercial car washes. If the blades are not wiping properly, clean both the window and the blades with a good cleaner or mild detergent, and rinse thoroughly with clean water.

⚠ CAUTION

To prevent damage to the wiper blades, do not use gasoline, kerosene, paint thinner, or other solvents on or near them.

Blade replacement

When the wipers no longer clean adequately, the blades may be worn or cracked, and require replacement.

⚠ CAUTION

To prevent damage to the wiper arms or other components, do not
(Continued)

(Continued)

attempt to move the wipers manually.

⚠ CAUTION

The use of a non-specified wiper blade could result in wiper malfunction and failure.

Front windshield wiper blade

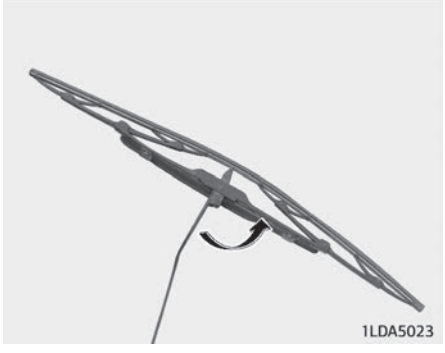

Type A

1. Raise the wiper arm and turn the wiper blade assembly to expose the plastic locking clip.

⚠ CAUTION

Do not allow the wiper arm to fall against the windshield, since it may chip or crack the windshield.

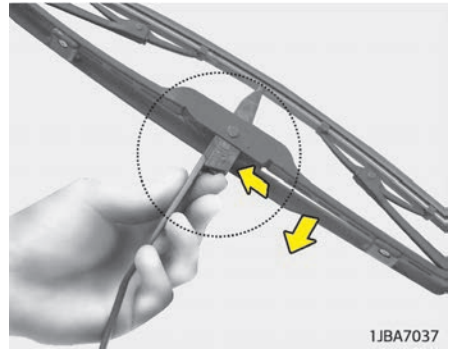

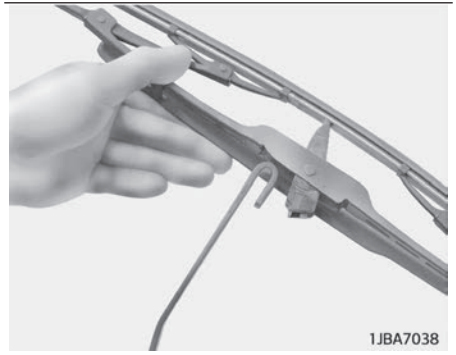

2. Compress the clip and slide the blade assembly downward.
3. Lift it off the arm.
4. Install the blade assembly in the reverse order of removal.

- Type A
  When installing, the front side should be heading for the rear of the vehicle and the rear side should be heading for the front of the vehicle.

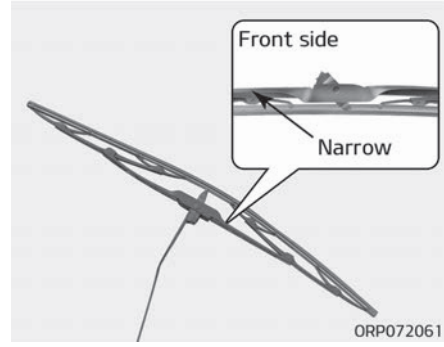

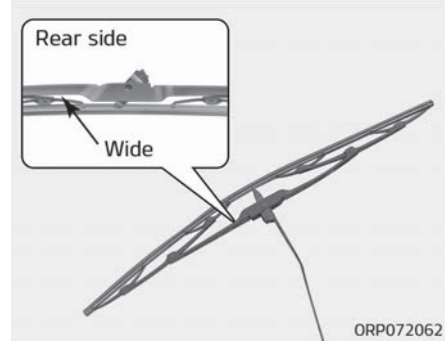

- Type B
  Install suitably after checking the following symbols.

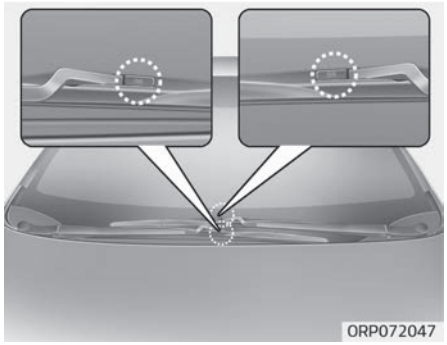

Type B

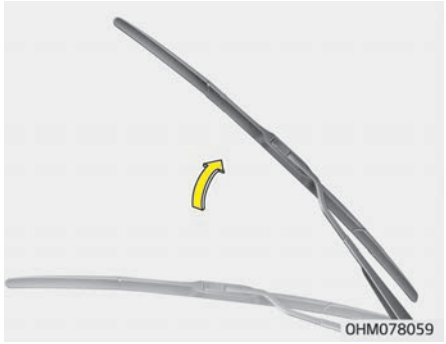

1. Raise the wiper arm.

⚠ CAUTION

Do not allow the wiper arm to fall against the windshield, since it may chip or crack the windshield.

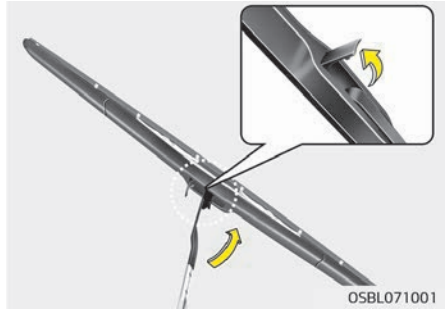

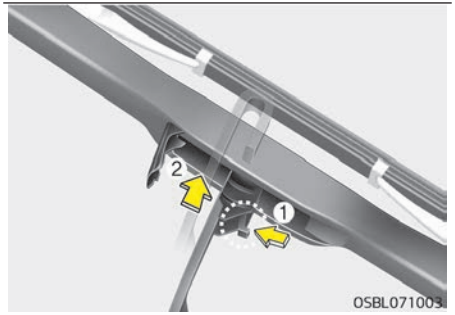

2. Turn the wiper blade clip. Then lift up the blade clip.
3. Push the clip (1) and push up the wiper arm (2).



4. Push down the wiper arm (3) and install the new blade assembly in the reverse order of removal.
5. Return the wiper arm on the windshield.

Rear window wiper blade

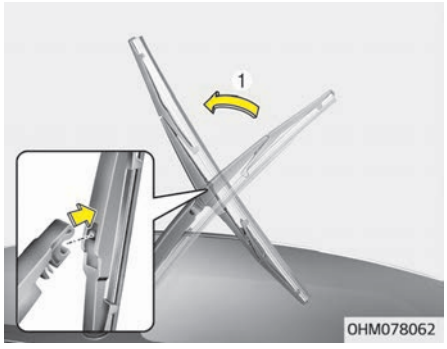

1. Raise the wiper arm and pull out the wiper blade assembly.

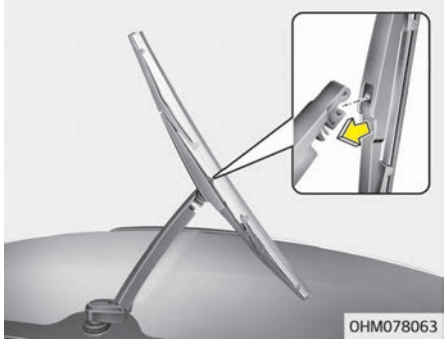

2. Install the new blade assembly by inserting the center part into the slot in the wiper arm until it clicks into place.
3. Make sure the blade assembly is installed firmly by trying to pull it slightly.

To prevent damage to the wiper arms or other components, have the wiper blade replaced by a professional workshop. Kia recommends to visit an authorized Kia dealer/service partner.

BATTERY

For best battery service

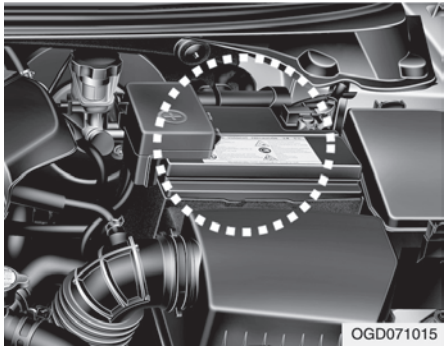

- Keep the battery securely mounted.
- Keep the battery top clean and dry.
- Keep the terminals and connections clean, tight, and coated with petroleum jelly or terminal grease.
- Rinse any spilled electrolyte from the battery immediately with a solution of water and baking soda.
- If the vehicle is not going to be used for an extended time, disconnect the battery cables.

✻ NOTICE

Basically equipped battery is maintenance free type. If your vehicle is equipped with the battery marked with LOWER and UPPER on the side, you can check the electrolyte level. The electrolyte level should be between LOWER and UPPER. If the electrolyte level is low, it needs to add distilled (demineralized) water (Never add sulfuric acid or other electrolyte). When refill, be careful not to splash the battery and adjacent components. And do not overfill the battery cells. It can cause corrosion on other parts. After then ensure that tighten the cell caps. Contact a professional workshop. Kia recommends to visit an authorized Kia dealer/service partner.

⚠ WARNING

■ Battery dangers

(Continued)

(Continued)

Always read the following instructions carefully when handling a battery.

Keep lighted cigarettes and all other flames or sparks away from the battery.

Hydrogen, a highly combustible gas, is always present in battery cells and may explode if ignited.

Keep batteries out of the reach of children because batteries contain highly corrosive SULFURIC ACID. Do not allow battery acid to contact your skin, eyes, clothing or paint finish.

(Continued)

(Continued)

If any electrolyte gets into your eyes, flush your eyes with clean water for at least 15 minutes and get immediate medical attention. If electrolyte gets on your skin, thoroughly wash the contacted area. If you feel a pain or a burning sensation, get medical attention immediately.

Wear eye protection when charging or working near a battery. Always provide ventilation when working in an enclosed space.

An inappropriately disposed battery can be harmful to the environment and human health. Dispose the battery according to your local law(s) or regulation.

(Continued)

(Continued)

The battery contains lead. Do not dispose of it after use. Contact a professional workshop. Kia recommends to visit an authorized Kia dealer/service partner.

- **When lifting a plastic-cased battery, excessive pressure on the case may cause battery acid to leak, resulting in personal injury. Lift with a battery carrier or with your hands on opposite corners.**
- **Never attempt to recharge the battery when the battery cables are connected.**
- **The electrical ignition system works with high voltage. Never touch these components with the engine running or the ignition switched on.**

Failure to follow the above warnings can result in serious bodily injury or death.

⚠ CAUTION

If you use unauthorized electronic devices, the battery may be discharged. Never use unauthorized devices.

Battery capacity label (see the example)

Example



OJD072039

❊ The actual battery label in the vehicle may differ from the illustration.

1. CMF60L-BCI: The Kia model name of battery
2. 12V: The nominal voltage

3. 60Ah(20HR): The nominal capacity (in Ampere hours)
4. 92RC: The nominal reserve capacity (in min.)
5. 550CCA: The cold-test current in amperes by SAE
6. 440A: The cold-test current in amperes by EN

Battery recharging

Your vehicle has a maintenance-free, calcium-based battery.

- If the battery becomes discharged in a short time (because, for example, the headlights or interior lights were left on while the vehicle was not in use), recharge it by slow charging (trickle) for 10 hours.
- If the battery gradually discharges because of high electric load while the vehicle is being used, recharge it at 20-30A for two hours.

⚠ WARNING

■ Recharging battery

When recharging the battery, observe the following precautions:

(Continued)

(Continued)

- **The battery must be removed from the vehicle and placed in an area with good ventilation.**
- **Do not allow cigarettes, sparks, or flame near the battery.**
- **Watch the battery during charging, and stop or reduce the charging rate if the battery cells begin gassing (boiling) violently or if the temperature of the electrolyte of any cell exceeds 49 °C (120°F).**
- **Wear eye protection when checking the battery during charging.**
- **Disconnect the battery charger in the following order.**
  1. **Turn off the battery charger main switch.**
  2. **Unhook the negative clamp from the negative battery terminal.**
  3. **Unhook the positive clamp from the positive battery terminal.**
- **Before performing maintenance or recharging the battery, turn off all accessories and stop the engine.**

(Continued)

(Continued)

- **The negative battery cable must be removed first and installed last when the battery is disconnected.**

⚠ CAUTION

■ AGM battery (if equipped)

- **Absorbent Glass Matt (AGM) batteries are maintenance free and have the AGM battery serviced by a professional workshop. Kia recommends to visit an authorized Kia dealer/service partner. For charging your AGM battery, use only fully automatic battery chargers that are specially developed for AGM batteries.**
- **When replacing the AGM battery, use parts for replacement from a professional workshop. Kia recommends to visit an authorized Kia dealer/service partner.**
- **Do not open or remove the cap on top of the battery. This may cause leaks of internal electrolyte that could result in severe injury.**

Reset items

Items should be reset after the battery has been discharged or the battery has been disconnected.

- Auto up/down window (see “Auto up/down window” on page 4-26)
- Sunroof (see “Sunroof” on page 4-35)
- Trip computer (see “Trip computer” on page 4-64)
- Climate control system (see “Climate control system” on page 4-120)
- Audio (see “Audio” on page 5-02)

TIRES AND WHEELS

Tire care

For proper maintenance, safety, and maximum fuel economy, you must always maintain recommended tire inflation pressures and stay within the load limits and weight distribution recommended for your vehicle.

Recommended cold tire inflation pressures

All tire pressures (including the spare) should be checked when the tires are cold. “Cold Tires” means the vehicle has not been driven for at least three hours or driven less than 1.6 km (1 mile).
Recommended pressures must be maintained for the best ride, top vehicle handling, and minimum tire wear.
For recommended inflation pressure, refer to “Tires and wheels” on page 9-09.

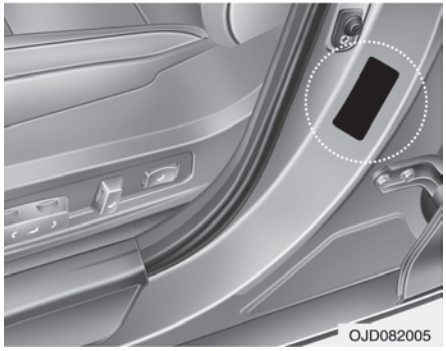

All specifications (sizes and pressures) can be found on a label attached to the vehicle.

⚠ WARNING

■ Tire underinflation

Severe underinflation (70 kPa (10 psi) or more) can lead to severe heat build-up, causing blowouts, tread separation and other tire failures that can result in the loss of vehicle control leading to severe injury

(Continued)

(Continued)

or death. This risk is much higher on hot days and when driving for long periods at high speeds.

⚠ CAUTION

- **Underinflation also results in excessive wear, poor handling and reduced fuel economy. Wheel deformation also is possible. Keep your tire pressures at the proper levels. If a tire frequently needs refilling, have the system checked by a professional workshop. Kia recommends to visit an authorized Kia dealer/service partner.**
- **Overinflation produces a harsh ride, excessive wear at the center of the tire tread, and a greater possibility of damage from road hazards.**

⚠ CAUTION

- **Warm tires normally exceed recommended cold tire pressures by 28 to 41 kPa (4 to 6 psi). Do not release air from warm tires to adjust the pressure or the tires will be underinflated.**
- **Be sure to reinstall the tire inflation valve caps. Without the valve cap, dirt or moisture could get into the valve core and cause air leakage. If a valve cap is missing, install a new one as soon as possible.**

⚠ WARNING

■ Tire Inflation

Overinflation or underinflation can reduce tire life, adversely affect vehicle handling, and lead to sudden tire failure. This could result in loss of vehicle control and potential injury.

⚠ CAUTION

■ Tire pressure

Always observe the following:

- **Check tire pressure when the tires are cold. (After vehicle has been parked for at least three hours or hasn't been driven more than 1.6 km (one mile) since startup.)**
- **Check the pressure of your spare tire each time you check the pressure of other tires.**
- **Never overload your vehicle. Be careful not to overload a vehicle luggage rack if your vehicle is equipped with one.**
- **Worn, old tires can cause accidents. If your tread is badly worn, or if your tires have been damaged, replace them.**

Checking tire inflation pressure

Check your tires once a month or more. Also, check the tire pressure of the spare tire.

How to check

Use a good quality gauge to check tire pressure. You can not tell if your tires are properly inflated simply by looking at them. Radial tires may look properly inflated even when they're underinflated.

Check the tire's inflation pressure when the tires are cold. - "Cold" means your vehicle has been sitting for at least three hours or driven no more than 1.6 km (1 mile).

Remove the valve cap from the tire valve stem. Press the tire gauge firmly onto the valve to get a pressure measurement. If the cold tire inflation pressure matches the recommended pressure on the tire and loading information label, no further adjustment is necessary. If the pressure is low, add air until you reach the recommended amount.

If you overfill the tire, release air by pushing on the metal stem in the center of the tire valve. Recheck the tire pressure with the tire gauge. Be sure to put the valve caps back on the valve stems. They help prevent leaks by keeping out dirt and moisture.

⚠ WARNING

- **Inspect your tires frequently for proper inflation as well as wear and damage. Always use a tire pressure gauge.**
- **Tires with too much or too little pressure wear unevenly causing poor handling, loss of vehicle control, and sudden tire failure leading to accidents, injuries, and even death. The recommended cold tire pressure for your vehicle can be found in this manual and on the tire label located on the driver's side center pillar.**
- **Worn tires can cause accidents. Replace tires that are worn, show uneven wear, or are damaged.**
- **Remember to check the pressure of your spare tire. Kia recommends that you check the spare every time you check the pressure of the other tires on your vehicle.**

Tire rotation

To equalize tread wear, it is recommended that the tires be rotated every 10,000 km (6,500 miles) or sooner if irregular wear develops.

During rotation, check the tires for correct balance.
When rotating tires, check for uneven wear and damage. Abnormal wear is usually caused by incorrect tire pressure, improper wheel alignment, out-of- balance wheels, severe braking or severe cornering. Look for bumps or bulges in the tread or side of tire. Replace the tire if you find either of these conditions. Replace the tire if fabric or cord is visible. After rotation, be sure to bring the front and rear tire pressures to specification and check lug nut tightness.
Refer to “Tires and wheels” on page 8-56.

With a full-size spare tire (if equipped)

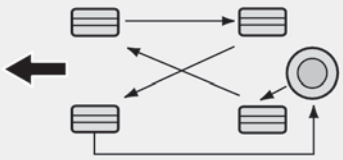

S2BLA790

Without a spare tire

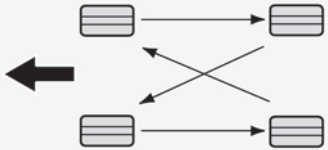

S2BLA790A

Directional tires (if equipped)

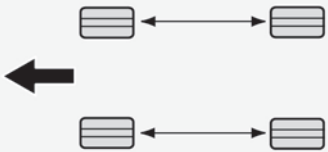

CBGQ0707A

Disc brake pads should be inspected for wear whenever tires are rotated.

✻ NOTICE

Rotate radial tires that have an asymmetric tread pattern only from front to rear and not from right to left.

⚠ WARNING

- **Do not use the compact spare tire for tire rotation.**
- **Do not mix bias ply and radial ply tires under any circumstances. This may cause unusual handling characteristics that could result in death, severe injury, or property damage.**

Wheel alignment and tire balance

The wheels on your vehicle were aligned and balanced carefully at the factory to give you the longest tire life and best overall performance.

In most cases, you will not need to have your wheels aligned again. However, if you notice unusual tire wear or your vehicle pulling one way or the other, the alignment may need to be reset.
If you notice your vehicle vibrating when driving on a smooth road, your wheels may need to be rebalanced.

⚠ CAUTION

Improper wheel weights can damage your vehicle's aluminum wheels. Use only approved wheel weights.

Tire replacement



If the tire is worn evenly, a tread wear Indicator will appear as a solid band across the tread. This shows there is less than 1.6 mm (1/16 in.) of tread left on the tire. Replace the tire when this happens.
Do not wait for the band to appear across the entire tread before replacing the tire.

✻ NOTICE

We recommend that when replacing tires, use the same originally supplied with the vehicles.
If not, that affects driving performance.

⚠ WARNING

■ Replacing tires

- **Driving on worn-out tires is very hazardous and will reduce braking effectiveness, steering accuracy, and traction.**

(Continued)

(Continued)

- **Your vehicle is equipped with tires designed to provide for safe ride and handling capability. Do not use a size and type of tire and wheel that is different from the one that is originally installed on your vehicle. It can affect the safety and performance of your vehicle, which could lead to handling failure or rollover and serious injury. When replacing the tires, be sure to equip all four tires with the tire and wheel of the same size, type, tread, brand and load-carrying capacity.**
- **The use of any other tire size or type may seriously affect ride, handling, ground clearance, stopping distance, body to tire clearance, snow tire clearance, and speedometer reliability.**
- **It is best to replace all four tires at the same time. If that is not possible, or necessary, then replace the two front or two rear tires as a pair. Replacing just one tire can seriously affect your vehicle's handling.**

(Continued)

(Continued)

- **The ABS works by comparing the speed of the wheels. Tire size can affect wheel speed. When replacing tires, all 4 tires must use the same size originally supplied with the vehicle. Using tires of a different size can cause the ABS (Anti-lock Brake System) and ESC (Electronic Stability Control) to work irregularly.**

Compact spare tire replacement (if equipped)

A compact spare tire has a shorter tread life than a regular size tire. Replace it when you can see the tread wear indicator bars on the tire. The replacement compact spare tire should be the same size and design tire as the one provided with your new vehicle and should be mounted on the same compact spare tire wheel. The compact spare tire is not designed to be mounted on a regular size wheel, and the compact spare tire wheel is not designed for mounting a regular size tire.

Wheel replacement

When replacing the metal wheels for any reason, make sure the new wheels are equivalent to the original factory units in diameter, rim width and offset.

⚠ WARNING

A wheel that is not the correct size may adversely affect wheel and bearing life, braking and stopping abilities, handling characteristics, ground clearance, body-to-tire clearance, snow chain clearance, speedometer and odometer calibration, headlight aim and bumper height.

Tire traction

Tire traction can be reduced if you drive on worn tires, tires that are improperly inflated or on slippery road surfaces. Tires should be replaced when tread wear indicators appear. To reduce the possibility of losing control, slow down whenever there is rain, snow or ice on the road.

Tire maintenance

In addition to proper inflation, correct wheel alignment helps to decrease tire wear. If you find a tire is worn unevenly, have your dealer check the wheel alignment.

When you have new tires installed, make sure they are balanced. This will increase vehicle ride comfort and tire life. Additionally, a tire should always be rebalanced if it is removed from the wheel.

Tire sidewall labeling

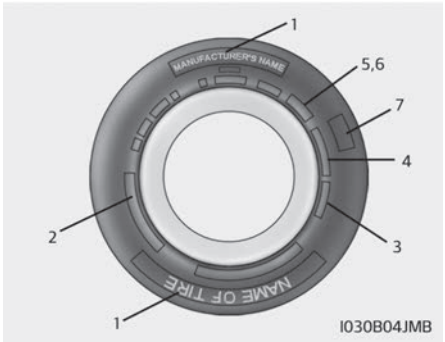

This information identifies and describes the fundamental characteristics of the tire and also provides the tire identification number (TIN) for safety standard certification. The TIN can be used to identify the tire in case of a recall.

1. Manufacturer or brand name

Manufacturer or brand name is shown.

2. Tire size designation

A tire's sidewall is marked with a tire size designation. You will need this information when selecting replacement tires for your car. The following explains what the letters and numbers in the tire size designation mean.
Example tire size designation:
(These numbers are provided as an example only; your tire size designator could vary depending on your vehicle.)
195/65R15 91H

- P – Applicable vehicle type (tires marked with the prefix "P" are intended for use on passenger vehicles or light trucks; however, not all tires have this marking).
- 195 – Tire width in millimeters.
- 65 – Aspect ratio. The tire's chapter height as a percentage of its width.
- R – Tire construction code (Radial).
- 15 – Rim diameter in inches.
- 91 – Load Index, a numerical code associated with the maximum load the tire can carry.
- H – Speed Rating Symbol. See the speed rating chart in this chapter for additional information.

Wheel size designation

Wheels are also marked with important information that you need if you ever have to replace one. The following explains what the letters and numbers in the wheel size designation mean.

Example wheel size designation:
6.0JX15

- 6.0 – Rim width in inches.
- J – Rim contour designation.
- 15 – Rim diameter in inches.

Tire speed ratings

The chart below lists many of the different speed ratings currently being used for passenger cars. The speed rating is part of the tire size designation on the sidewall of the tire. This symbol corresponds to that tire's designed maximum safe operating speed.

Speed rating symbol	Maximum speed
S	180 km/h (112 mph)
T	190 km/h (118 mph)
H	210 km/h (130 mph)
V	240 km/h (149 mph)
Z	Above 240 km/h (149 mph)

3. Checking tire life (TIN: Tire Identification Number)

Any tires that are over 6 years, based on the manufacturing date, tire strength and performance, decline with age naturally (even unused spare tires). Therefore, the tires (including the spare tire) should be replaced by new ones. You can find the manufacturing date on the tire sidewall (possibly on the inside of the wheel), displaying the DOT Code. The DOT Code is a series of numbers on a tire consisting of numbers and English letters. The manufacturing date is designated by the last four digits (characters) of the DOT code.

DOT : XXXX XXXX 0000

The front part of the DOT means a plant code number, tire size and tread pattern and the last four numbers indicate week and year manufactured.
For example:
DOT XXXX XXXX 1618 represents that the tire was produced in the 16th week of 2018.

⚠ WARNING

■ Tire age

Tires degrade over time, even when they are not being used. Regardless of the remaining tread, it is recommended that tires generally be replaced after six (6) years of normal service. Heat caused by hot climates or frequent high loading conditions can accelerate the aging process. Failure to follow this Warning can result in sudden tire failure, which could lead to a loss of control and an accident involving serious injury or death.

4. Tire ply composition and material

The number of layers or plies of rubber- coated fabric are in the tire. Tire manufacturers also must indicate the materials in the tire, which include steel, nylon, polyester, and others. The letter "R" means radial ply construction; the letter "D" means diagonal or bias ply construction; and the letter "B" means belted-bias ply construction.

5. Maximum permissible inflation pressure

This number is the greatest amount of air pressure that should be put in the tire. Do not exceed the maximum permissible inflation pressure. Refer to the Tire and Loading Information label for recommended inflation pressure.

6. Maximum load rating

This number indicates the maximum load in kilograms and pounds that can be carried by the tire. When replacing the tires on the vehicle, always use a tire that has the same load rating as the factory installed tire.

7. Uniform tire quality grading

Quality grades can be found where applicable on the tire sidewall between tread shoulder and maximum chapter width.

For example:
TREADWEAR 200
TRACTION AA
TEMPERATURE A

Tread wear

The tread wear grade is a comparative rating based on the wear rate of the tire when tested under controlled conditions on a specified government test course. For example, a tire graded 150 would wear one-and-ahalf times (1½) as well on the government course as a tire graded 100.

The relative performance of tires depends upon the actual conditions of their use, however, and may depart significantly from the norm because of variations in driving habits, service practices and differences in road characteristics and climate.

These grades are molded on the sidewalls of passenger vehicle tires. The tires available as standard or optional equipment on your vehicles may vary with respect to grade.

Traction – AA, A, B & C

The traction grades, from highest to lowest, are AA, A, B and C. Those grades represent the tires ability to stop on wet pavement as measured under controlled conditions on specified government test surfaces of asphalt and concrete.A tire marked C may have poor traction performance.

⚠ WARNING

The traction grade assigned to this tire is based on straight-ahead braking traction tests, and does not include acceleration, cornering, hydroplaning, or peak traction characteristics.

Temperature – A, B & C

The temperature grades are A (the highest), B and C representing the tire's resistance to the generation of heat and its ability to dissipate heat when tested under controlled conditions on a specified indoor laboratory test wheel.
Sustained high temperature can cause the material of the tire to degenerate and reduce tire life, and excessive temperature can lead to sudden tire failure. Grades B and A represent higher levels of performance on the laboratory test wheel than the minimum required by the law.

⚠ WARNING

■ Tire temperature
(Continued)

(Continued)

The temperature grade for this tire is established for a tire that is properly inflated and not overloaded. Excessive speed, underinflation, or excessive loading, either separately or in combination, can cause heat buildup and possible sudden tire failure. This can cause loss of vehicle control and serious injury or death.

Low aspect ratio tire (if equipped)

Low aspect ratio tires, whose aspect ratio is lower than 50, are provided for sporty looks.
Because the low aspect ratio tires are optimized for handling and braking, it may be more uncomfortable to ride in and there is more noise compare with normal tires.

⚠ CAUTION

Because the sidewall of the low aspect ratio tire is shorter than the normal, the wheel and tire of the low aspect ratio tire is easier to be
(Continued)

(Continued)

damaged. So, follow the instructions below.

- **When driving on a rough road or off road, drive cautiously because tires and wheels may be damaged. And after driving, inspect tires and wheels.**
- **When passing over a pothole, speed bump, manhole or curb stone, drive slowly so that the tires and wheels are not damaged.**
- **If the tire is impacted, inspect the tire condition or contact a professional workshop. Kia recommends to visit an authorized Kia dealer/ service partner.**
- **To prevent damage to the tire, inspect the tire condition and pressure every 3,000 km.**

⚠ CAUTION

- **It is not easy to recognize the tire damage with your own eyes. But if there is the slightest hint of tire damage, even though you cannot see the tire damage with your own eyes, have the tire checked or replaced because the tire damage may cause air leakage from the tire.**
- **If the tire is damaged by driving on a rough road, off road, pothole, manhole, or curb stone, it will not be covered by the warranty.**
- **You can find out the tire information on the tire sidewall.**

FUSES

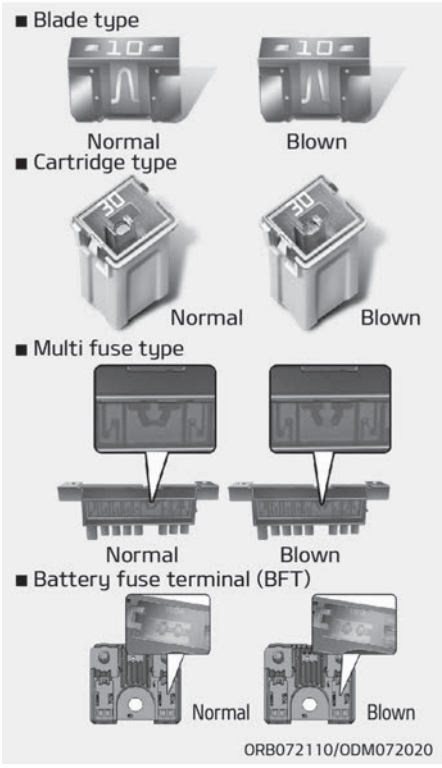

A vehicle's electrical system is protected from electrical overload damage by fuses.

This vehicle has 3 (or 4) fuse panels, one located in the driver's side panel bolster, others in the engine compartment near the battery.
If any of your vehicle's lights, accessories, or controls do not work, check the appropriate circuit fuse. If a fuse has blown, the element inside the fuse will be melted.
If the electrical system does not work, first check the driver's side fuse panel.

Always replace a blown fuse with one of the same rating.
Before replacing a blown fuse, disconnect the negative battery cable.
If the replacement fuse blows, this indicates an electrical problem. Avoid using the system involved and immediately consult a professional workshop. Kia recommends to consult an authorized Kia dealer/service partner.

Three kinds of fuses are used: blade type for lower amperage rating, cartridge type, and multi fuse type for higher amperage ratings.

⚠ WARNING

■ Fuse replacement

- **Never replace a fuse with anything but another fuse of the same rating.**
- **A higher capacity fuse could cause damage and possibly a fire.**
- **Never install a wire or aluminum foil instead of the proper fuse - even as a temporary repair. It may cause extensive wiring damage and a possible fire.**
- **Do not arbitrarily modify or add-on electric wiring of the vehicle.**

⚠ CAUTION

Do not use a screwdriver or any other metal object to remove fuses because it may cause a short circuit and damage the system.

✻ NOTICE

The actual fuse/relay panel label may differ from equipped items.

⚠ CAUTION

- **When replacing a blown fuse or relay with a new one, make sure the new fuse or relay fits tightly into the clips. The incomplete fastening fuse or relay may cause the vehicle wiring and electric systems damage and a possible fire.**
- **Do not remove fuses, relays and terminals fastened with bolts or nuts. The fuses, relays and terminals may be fastened incompletely, and it may cause a possible fire. If fuses, relays and terminals fastened with bolts or nuts are blown, consult a professional workshop. Kia recommends to consult an authorized Kia dealer/service partner.**

(Continued)

(Continued)

- **Do not input any other objects except fuses or relays into fuse/relay terminals such as a driver or wiring. It may cause contact failure and system malfunction.**
- **Do not plug in screwdrivers or aftermarket wiring into the terminal originally designed for fuse and relays only. The electrical system and wiring of the vehicle interior may be damaged or burned due to contact failure.**

Inner panel fuse replacement

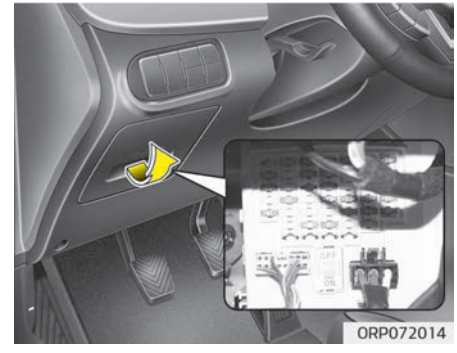

1. Turn the ignition switch and all other switches off.
2. Open the fuse panel cover.

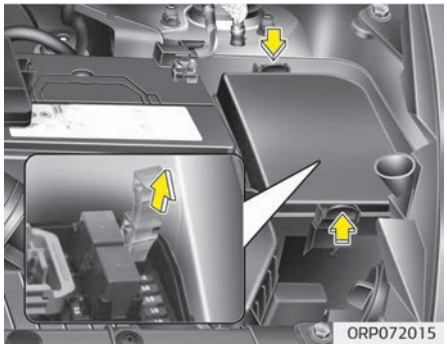

3. Pull the suspected fuse straight out. Use the removal tool provided in the engine compartment fuse panel.
4. Check the removed fuse; replace it if it is blown.
5. Push in a new fuse of the same rating, and make sure it fits tightly in the clips.

If it fits loosely, consult a professional workshop. Kia recommends to consult an authorized Kia dealer/service partner.

If you do not have a spare, use a fuse of the same rating from a circuit you may not need for operating the vehicle, such as the cigar lighter fuse.

If the headlights, fog lights, turn signal lights, position lights or interior lights do not work and there is nothing wrong with the bulbs, consult a professional workshop. Kia recommends to consult an authorized Kia dealer/service partner.

Fuse switch

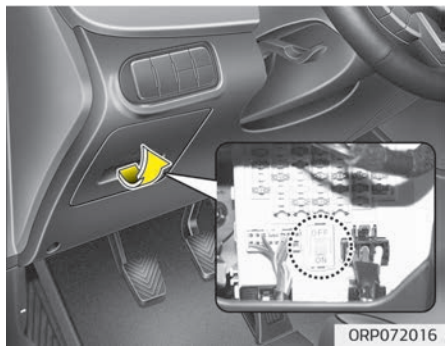

Always, put the fuse switch at the ON position.

If you move the switch to the OFF position, some items such as audio and digital clock must be reset and transmitter (or smart key) may not work properly.

⚠ CAUTION

- **Always place the fuse switch in the ON position while driving the vehicle.**
- **Do not move the fuse switch repeatedly. The fuse switch may be worn out.**

✻ NOTICE

If you need to park your vehicle for prolonged periods more than 1 month, move the fuse switch to the OFF position to prevent the battery being discharged.

Engine compartment panel fuse replacement

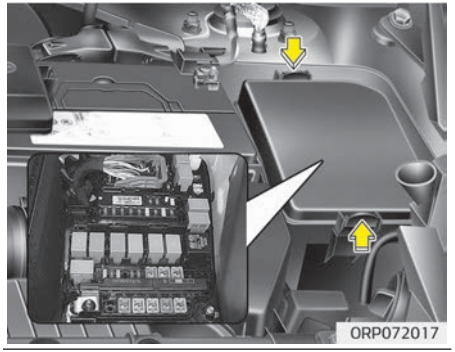

Diesel only

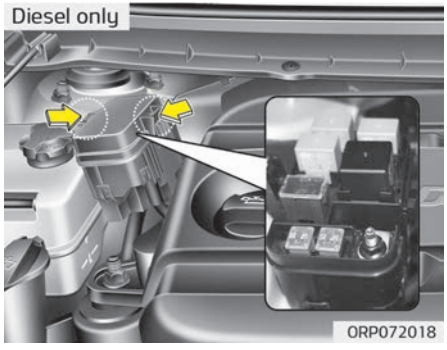

1. Turn the ignition switch and all other switches off.
2. Remove the fuse panel cover by pressing the tab and pulling the cover up. When the blade type fuse is disconnected, remove it by using the clip designed for changing fuses located in the engine room fuse box. Upon removal, securely insert reserve fuse of equal quantity.
3. Check the removed fuse; replace it if it is blown. To remove or insert the fuse, use the fuse puller in the engine compartment fuse panel.
4. Push in a new fuse of the same rating, and make sure it fits tightly in the clips. If it fits loosely, consult a professional workshop. Kia recommends to consult an authorized Kia dealer/service partner.

⚠ CAUTION

After checking the fuse box in the engine compartment, securely install the fuse box cover. If not, electrical failures may occur from water leaking in.

Main fuse

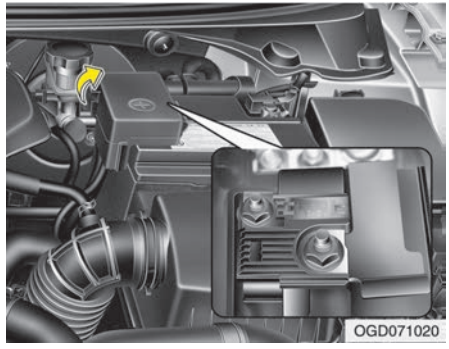

If the main fuse is blown, it must be removed as follows:

1. Turn off the engine.
2. Disconnect the negative battery cable.
3. Remove the nuts shown in the picture above.
4. Replace the fuse with a new one of the same rating.
5. Reinstall in the reverse order of removal.

⚠ CAUTION

Visually inspect the battery cap for secure closing. If the battery cap is not securely latched, the electrical system may be damaged to due influx of moisture into the system.

Multi fuse

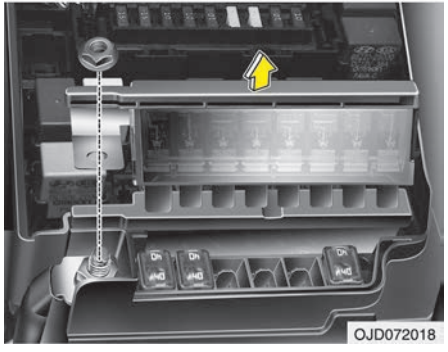

If the multi fuse is blown, it must be removed as follows:

1. Turn off the engine.
2. Disconnect the negative battery cable.
3. Remove the fuse panel on the right side in the engine compartment.
4. Remove the nuts shown in the picture above.
5. Replace the fuse with a new one of the same rating.
6. Reinstall in the reverse order of removal.

✻ NOTICE

If the multi fuse or main fuse is blown, consult a professional workshop. Kia recommends to consult an authorized Kia dealer/service partner.

Fuse/relay panel description

■ Inner fuse panel

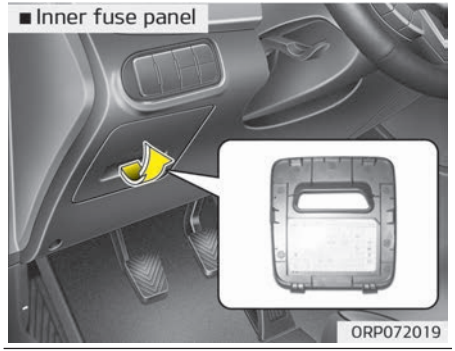

■ Engine compartment fuse panel (for gasoline engine)

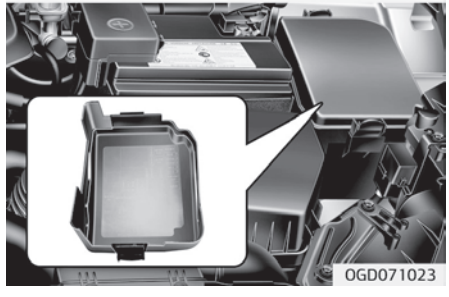

■ Engine compartment fuse panel (for diesel engine)

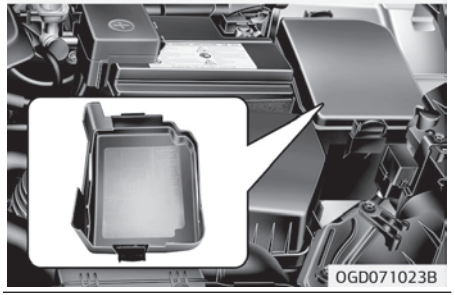

■ Engine compartment fuse panel (diesel engine only)

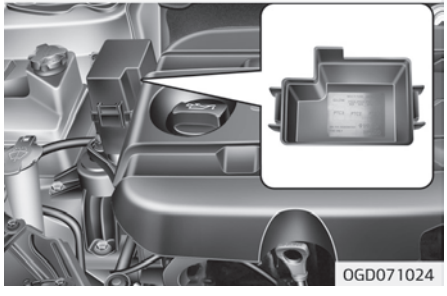

Inside the fuse/relay panel covers, you can find the fuse/relay label describing fuse/relay name and capacity.

✻ NOTICE

Not all fuse panel descriptions in this manual may be applicable to your vehicle. It is accurate at the time of printing. When you inspect the fuse panel in your vehicle, refer to the fuse panel label.

✻ NOTICE

The actual fuse/relay panel label may differ from equipped items.

Inner fuse panel

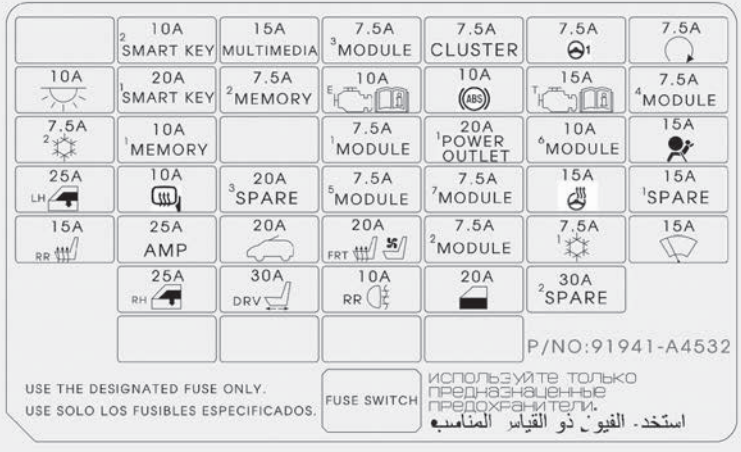

ORP076009

Instrument panel (Driver's side fuse panel)

No.	Fuse rating	Symbol	Fuse Name	Protected component
1	30A	DRV	P/SEAT DRV	4WAY: Driver Lumbar Support Switch 6WAY: Driver Seat Manual Switch
2	25A	RH	P/WDW RH	Power Window Relay RH, Driver/Passenger Safety Power Window Module, Rear Safety Power Window Module RH
3	25A	LH	P/WDW LH	Power Window Relay LH, Driver/Passenger Safety Power Window Module, Rear Safety Power Window Module LH
4	20A		DR LOCK	Door Lock/Unlock Relay, Dead Lock Relay
5	15A	1 SPARE	SPARE 1	-
6	20A	1 POWER OUTLET	POWER OUTLET 1	Cigarette Lighter, Rear Power Outlet
7	20A	3 SPARE	SPARE 3	-
8	7.5A	3 MODULE	MODULE 3	Frt Seat Warmer Sw, Hlld Sw, Navigation, Amp, Rear Seat Warmer Ecu, Auto Hlld Ecu, Heater Control Unit
9	20A	FRT	S/HEATER FRT SEAT VENT	Driver/Passenger Seat Warmer Module
10	10A	6 MODULE	MODULE 6	A/V & Navigation Head Unit (W/O ISG), Audio (W/O ISG), DC-DC Converter (With ISG), Digital Clock, Smart Key Control Module, BCM, Outside Mirror Switch, Outside Mirror
11	7.5A	1	A/CON1	Cluster Ionizer, A/C Control Module, Blower Relay, PTC Relay
12	7.5A	5 MODULE	MODULE 5	ICM Relay Box (Head Lamp Washer Relay), Portable Lamp, Passenger Seat Warmer Module, Driver Seat Warmer Module

No.	Fuse rating	Symbol	Fuse Name	Protected component
13	10A		HTD MIRR	Driver/Passenger Outside Mirror, ECU, A/C Control Module
14	10A		INTERIOR LAMP	Glove Box Lamp, Luggage Lamp, Vanity Lamp LH/RH, Room Lamp, Overhead Console Lamp, Door Warning Sw, Foot Lamp LH/RH, Portable Lamp, Door Warning Sw, Foot Lamp LH/RH, Portable Lamp
15	10A	2 SMART KEY	SMART KEY 2	Immobilizer Module, Start Stop Button Switch
16	20A		SUNROOF	Panorama Sunroof
17	7.5A	1 MODULE	MODULE 1	Electronic Parking Brake Module, Rear Parking Assist Sensor, Smart Parking Assist Control Module, Crash Pad Lower Switch, Rear Parking Assist Sensor Buzzer, Tire Pressure Monitoring System
18	15A		HTD STRG	Steering Wheel Heater
19	10A	E	ECU	Immobilizer Module, Smart Key Control Module, ECU, Speed Sensor
20	15A		WIPER	Front Washer Motor, Rear Wiper Motor, Rear Wiper Relay
21	7.5A	2 MEMORY	MEMORY 2	Rf Receiver
22	10A	1 MEMORY	MEMORY 1	Instrument Cluster, Tire Pressure Monitoring Module, BCM, A/C Control Module, ICM Relay Box (Outside Mirror Folding/Unfolding Relay), Ignition Key ILL. & Door Warning Switch, Digital Clock, Data Link Connector, Buzzer
23	7.5A	CLUSTER	CLUSTER	Instrument Cluster, DC-DC Converter (With ISG)
24	7.5A	1	POWER STEERING	EPS Unit
25	30A	2 SPARE	SPARE 2	-
26	7.5A		START	Start Relay, ECU, Ignition Lock Switch, Transaxle Range Switch, TCU, Smart Key Control Module

No.	Fuse rating	Symbol	Fuse Name	Protected component
27	15A	MULTI MEDIA	MULTI MEDIA	A/V & Navigation Head Unit (W/O ISG), Audio (W/O ISG), DC-DC Converter (With ISG), Digital Clock
28	20A	1 SMART KEY	SMART KEY 1	Smart Key Control Module
29	15A		A/BAG	SRS Control Module
30	7.5A	2 MODULE	MODULE 2	Rear Seat Warmer Sw, ICM BOX (Fold'g Rly), AT LEVER Key Sol, ICM BOX (Turn Signal Sound)
31	7.5A	4 MODULE	MODULE 4	Body Control Module
32	7.5A	7 MODULE	MODULE 7	Body Control Module, Smart Key Control Module
33	15A		TCU	M/T: F35 (B/UP LAMP), A/T: Transaxle Range Switch, TCM (D4HB)
34	10A	ABS	ABS	ESC Control Module, ABS Control Module
35	7.5A	2	A/CON 2	A/C Control Module
36	15A	RR	S/HEATER RR	Rear Seat Warmer LH/RH
37	25A	AMP	AMP	AMP, DC-DC Converter (With ISG)
38	10A	RR	FOG LAMP RR	ICM Relay Box (Rear Fog Lamp Relay)

Engine compartment fuse panel (for gasoline engine)

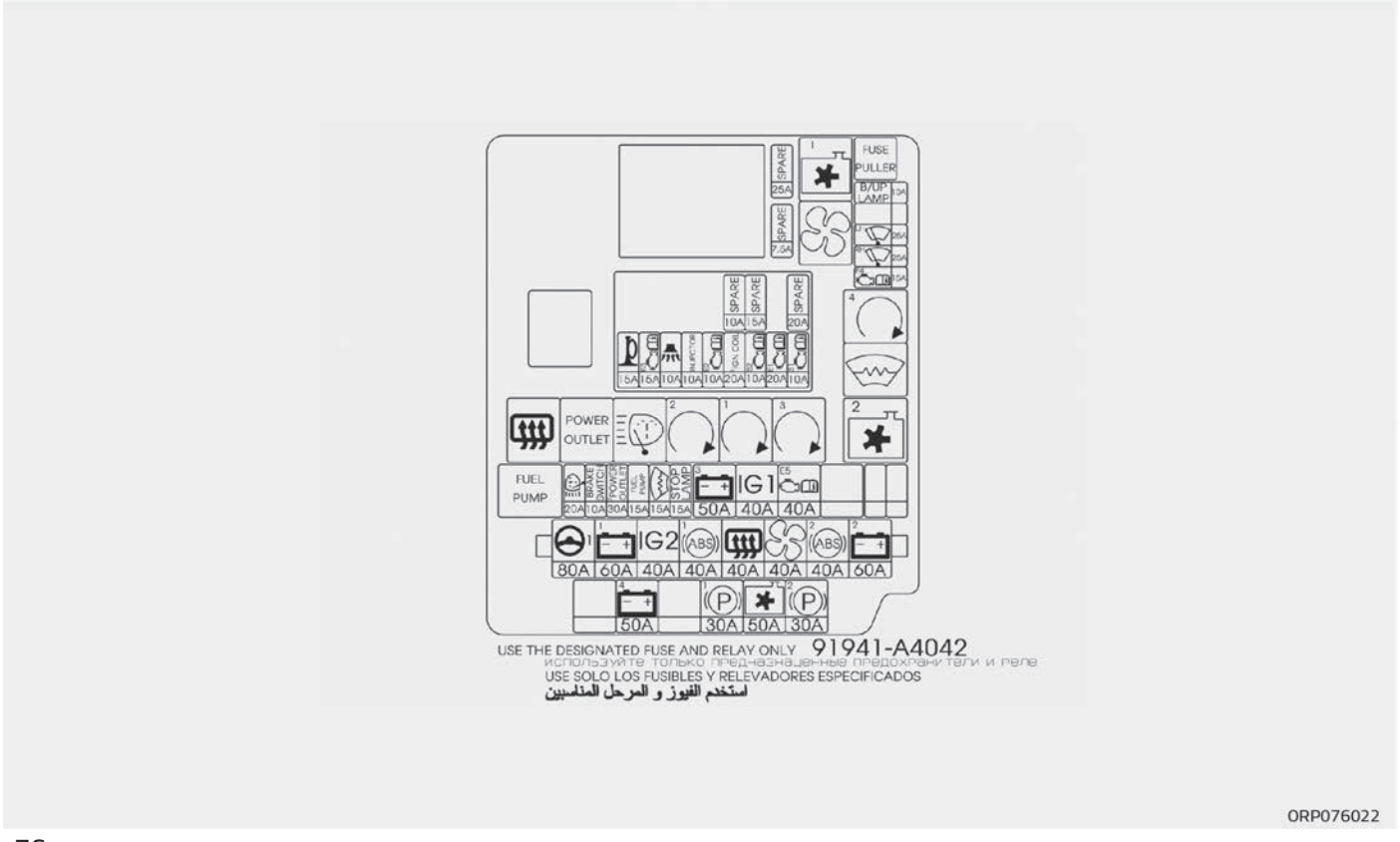

Engine compartment fuse panel (for diesel engine)

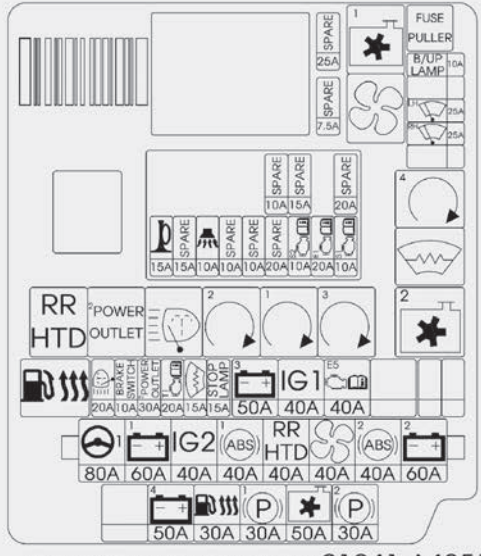

USE THE DESIGNATED FUSE AND RELAY ONLY 91941-A4051
используйте только предназначенные предохранители и реле
USE SOLO LOS FUSIBLES Y RELEVADORES ESPECIFICADOS

ORP076081L

Engine compartment main fuse panel
(for gasoline engine)

Fuse	Fuse rating	Symbol	Fuse Name	Protected component
MULTI FUSE	80A		MDPS	MDPS Unit
	60A		IP_B+1	Inner Fuse Panel, S/Heater RR, Smart Key 1, 2, P/WDW LH/RH, IPS-1/Arisu-1 (H/Lamp Low RH, H/Lamp Hi RH, Turn FR/RR), IPS-2 (Int Tail Lamp), IPS-4 (Drl Lamp LH/RH), IPS-3 (Frt Fog Lamp LH/RH)
	40A		ABS_1	ESC Control Module, ABS Control Module
	40A		ABS_2	ESC Control Module, ABS Control Module, Multipurpose Check Connector
	40A	IG 2	IGN_2	W/O Smart Key : Ignition Switch, START RELAY, Starter Fuse No: 26 With Smart Key : IG2 RELAY, START RELAY, IG2 Fuse No: 11, 12, 18, 20, 35
	60A		IP_B+2	Inner Fuse Panel, P/seat DRV, Spare3, Fog Lamp RR, IPS-5/Arisu-2 (H/Lamp Low LH, H/Lamp Hi LH, Turn FL/RL), IPS-6 (EXT Tail Lamp LH/RH), IPS-7 (Static Bending Lamp LH), IPS-8 (Static Bending Lamp RH)
	40A		RR HTD	RR HTD RELAY RR HTD, MIRR HTD
	40A		BLOWER	BLOWER RLY, BLOWER MOTOR

Fuse	Fuse rating	Symbol	Fuse Name	Protected component
FUSE	40A	IG 1	IG1	W/O Smart Key: Ignition Switch With Smart Key: IG1 RELAY, ACC RELAY, INNER FUSE PANEL (ACC Fuse No: 6,10 IG1 Fuse No: 8,17,19, 23, 24, 31, 33, 36, 37)
	30A	1 (P)	EPB_1	Electronic Parking Brake Module
	30A	2 (P)	EPB_2	Electronic Parking Brake Module
	50A		C/FAN	C/FAN LO RELAY, C/FAN HI RELAY, C/FAN MOTOR
	15A		DEICER	DEICER RELAY
	15A	STOP LAMP	STOP LAMP	Stop Signal Electronic Relay, SSEM, STOP LAMP
	40A	5	EMS	EMS Box (FUSE No. - 1/2/3/4/5/6/7/8/9)
	50A	3	B+3	Inner Fuse Panel (Leak Current Autocut Device, Fuse No. - 4/7/9/14/16/21/22/27/32/40)

Fuse	Fuse rating	Symbol	Fuse Name	Protected component
FUSE	25A	LH	FRT_WIPER_LH	FRT WIPER LH
	25A	RH	FRT_WIPER_RH	FRT WIPER RH
	10A	B/UP LAMP	B/UP LP	M/T: Back-up Lamp Switch, A/T: Transaxle Range Switch, TCU
	15A	E4	ECU4	ECU
	50A	4	B+4	FRT WIPER LH/RH , ECU4
	10A	BRAKE SWITCH	BRAKE_SWITCH	STOP SIGNAL
	20A		H/LP_WASHER	FRT WIPER LH/RH , ECU4
	30A	2 POWER OUTLET	P/OUTLET 2	P/OUTLET RELAY 2
	7.5A	SPARE	SPARE	SPARE

Symbol	Relay Name	Type
1	COOLING FAN LOW RELAY	H/C MICRO
2	COOLING FAN HIGH RELAY	3725
	BLOWER RELAY	H/C MICRO
	REAR DEFOGGER RELAY	H/C MICRO
3(IG1)	B/START (IG1) RELAY	H/C MICRO
4(IG2)	B/START (IG2) RELAY	H/C MICRO

Symbol	Relay Name	Type
	START RELAY	H/C MICRO
	B/START (ACC) RELAY	H/C MICRO
	DEICER RLY	ISO MICRO
	F/PUMP RLY	H/C MICRO
	H/LP WASHER RLY	ISO MICRO
	P/OUTLET2 RLY	ISO MICRO

Fuse rating	Symbol	Fuse Name	Relay Name
15A		B/A HORN	B/ALARM HORN RLY
15A		ECU3	ECU
15A		HORN	Horn
10A		INJECTOR	INJECTOR, ECU, FUEL PUMP RELAY
10A		ECU2	ECU
20A		IGN COIL	Ignition Coil #1/#2/#3/#4, Condenser
10A		SENSOR2	E/R Fuse & Relay Box (COOLING LOW RELAY), Oil Control Valve #1/#2
20A		ECU1	ECU
10A		SENSOR1	Oxygen Sensor (UP/DOWN), Variable Intake Solenoid Valve, Purge Control Solenoid Valve

Fuse rating	Symbol	Fuse Name	Relay Name
10A	SPARE	SPARE	SPARE
15A	SPARE	SPARE	SPARE
20A	SPARE	SPARE	SPARE

Engine compartment main fuse panel (for diesel engine)

Fuse	Fuse rating	Symbol	Fuse Name	Protected component
MULTI FUSE	80A		MDPS	MDPS Unit
	60A		IP_B+1	Inner Fuse Panel, S/Heater RR, Smart Key 1, 2, P/WDW LH/RH, IPS-1/Arisu-1 (H/Lamp Low RH, H/Lamp Hi RH, Turn FR/RR) IPS-2 (Int Tail Lamp), IPS-4 (Drl Lamp LH/RH), IPS-3 (Frt Fog Lamp LH/RH)
	40A		ABS_1	ESC Control Module, ABS Control Module
	40A		ABS_2	ESC Control Module, ABS Control Module, Multipurpose Check Connector
	40A	IG 2	IGN_2	W/O Smart Key: Ignition Switch, START RELAY, Starter Fuse No - 26 With Smart Key: IG2 RELAY, START RELAY, IG2 Fuse No - 11/12/18/20/35
	60A		IP_B+2	Inner Fuse Panel, P/seat DRV, Spare3, Fog Lamp RR, IPS-5/Arisu-2 (H/Lamp Low LH, H/Lamp Hi LH, Turn FL/RL), IPS-6 (EXT Tail Lamp LH/RH), IPS-7 (Static Bending Lamp LH), IPS-8 (Static Bending Lamp RH)
	40A		RR HTD	RR HTD RELAY RR HTD, MIRR HTD
	40A		BLOWER	BLOWER RLY, BLOWER MOTOR

Fuse	Fuse rating	Symbol	Fuse Name	Protected component
FUSE	40A	IG 1	IG1	W/O Smart Key: Ignition Switch With Smart Key: IG1 RELAY, ACC RELAY, INNER FUSE PANEL (ACC Fuse No - 6/10 IG1 Fuse No - 8/17/19/23/24/31/33/36/37)
	30A	1 (P)	EPB_1	Electronic Parking Brake Module
	30A	2 (P)	EPB_2	Electronic Parking Brake Module
	50A		C/FAN	C/FAN LO RELAY, C/FAN HI RELAY, C/FAN MOTOR
	15A	FRONT	DEICER	DEICER RELAY
	15A	STOP LAMP	STOP LAMP	Stop Signal Electronic Relay, SSEM, STOP LAMP
	20A	FUEL PUMP	FUEL PUMP	FUEL PUMP RELAY
	30A		FUEL HEATER	FUEL HEATER RELAY
	40A	ES	EMS	EMS BOX (Fuse No. - 1/2/3/4/5/6/7/8/9)
	50A	3	B+3	Inner Fuse Panel (Leak Current Autocut Device, Fuse No. - 4/7/9/14/16/21/22/27/32/40)

Fuse	Fuse rating	Symbol	Fuse Name	Protected component
FUSE	25A	LH	FRT_WIPER_LH	FRT WIPER LH
	25A	RH	FRT_WIPER_RH	FRT WIPER RH
	10A	B/UP LAMP	B/UP LP	M/T: Back-up Lamp Switch, A/T: Transaxle Range Switch, TCU
	50A	4	B+4	FRT WIPER LH/RH , ECU4
	40A	1 DCT	DCT 1	Dual Clutch TCU (Voltage Battery 1)
	40A	2 DCT	DCT 2	Dual Clutch TCU (Voltage Battery 2)
	10A	BRAKE SWITCH	BRAKE_SWITCH	STOP SIGNAL
	20A		H/LP_WASHER	FRT WIPER LH/RH , ECU4
	25A	2 POWER OUTLET	P/OUTLET 2	P/OUTLET RELAY 2
	7.5A	SPARE	SPARE	SPARE

Symbol	Relay Name	Type
1	COOLING FAN LOW RELAY	H/C MICRO
2	COOLING FAN HIGH RELAY	3725
	BLOWER RELAY	H/C MICRO
REAR HEATED	REAR DEFOGGER RELAY	H/C MICRO
3 (IG1)	B/START (IG2) RELAY	H/C MICRO

Symbol	Relay Name	Type
	B/START (IG1) RELAY	H/C MICRO
	START RELAY	H/C MICRO
	B/START (ACC) RELAY	H/C MICRO
	FUEL HEATER RELAY / FUEL PUMP RELAY	H/C MICRO
	DEICER	ISO MICRO
	H/LP WASHER RLY	ISO MICRO
	P/OUTLET2 RLY	ISO MICRO

Fuse rating	Symbol	Fuse Name	Relay Name
15A	SPARE	SPARE	SPARE
15A		HORN	HORN RELAY
20A	SPARE	SPARE	SPARE
10A		SENSOR2	E/R Fuse & Relay Box (COOLING FAN LOW RELAY), Lambda Sensor (D4FB), Stop Lamp Switch
20A		ECU1	ECU
10A		SENSOR1	DSL Box (PTC1 RELAY, GLOW RELAY), VGT Control Sensor, Camshaft Position Sensor, Electrical EGR Valve
15A		B/A_HORN	B/ALARM HORN RLY

Fuse rating	Symbol	Fuse Name	Relay Name
10A	SPARE	SPARE	SPARE
15A	3 DCT	DCT3	ECU
10A	SPARE	SPARE	SPARE
10A	SPARE	SPARE	SPARE
20A	SPARE	SPARE	SPARE

Engine compartment fuse panel (diesel engine only)

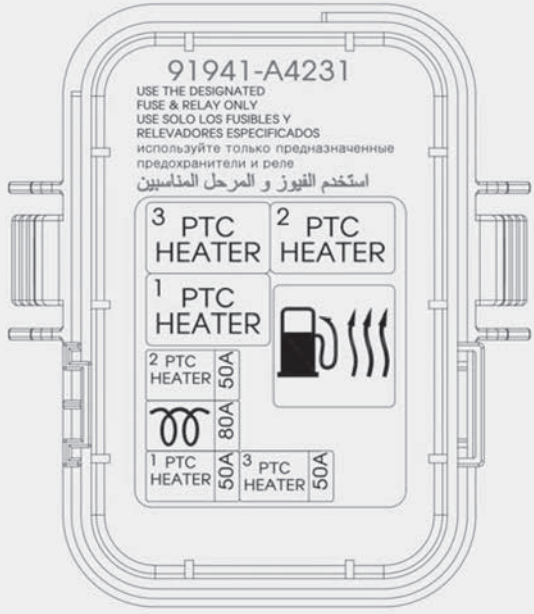

ORP076008

Symbol	Fuse rating RELAY Name	Relay Type
	FUEL HEATER RLY	FUEL HEATER RLY
	PTC_HTR_1 RLY	PTC_HTR_1 RLY
	PTC_HTR_2 RLY	PTC_HTR_2 RLY
	PTC_HTR_3 RLY	PTC_HTR_3 RLY
	80	GLOW
	50	PTC_HTR_1
	50	PTC_HTR_2
	50	PTC_HTR_3

LIGHT BULBS

⚠ WARNING

■ Working on the lights

Prior to working on the light, firmly apply the parking brake, ensure that the ignition switch is turned to the "LOCK"position (smart key: turn off the engine) and turn off the lights to avoid sudden movement of the vehicle and burning your fingers or getting an electric shock.

Use only the bulbs of the specified wattage.

⚠ CAUTION

Be sure to replace the burned-out bulb with one of the same wattage rating. Otherwise, it may cause damage to the fuse or electric wiring system.

⚠ CAUTION

If you don't have necessary tools, the correct bulbs and the expertise, consult a professional workshop. Kia recommends to consult an authorized Kia dealer/service partner. In many cases, it is difficult to replace vehicle light bulbs because other parts of the vehicle must be removed before you can get to the bulb. This is especially true if you have to remove the headlight assembly to get to the bulb(s). Removing/installing the headlight assembly can result in damage to the vehicle.

✻ NOTICE

After driving in heavy rain or washing the vehicle, headlight and taillight lenses could appear foggy. This condition is caused by the temperature difference between the lamp inside and outside. This is similar to the

(Continued)

(Continued)

condensation on your windows inside your vehicle during rain and does not indicate a problem with your vehicle. If the water leaks into the lamp bulb circuitry, have the vehicle checked by a professional workshop. Kia recommends to visit an authorized Kia dealer/service partner.

Front light replacement



1. Headlight (High)
2. Static bending light

3. Headlight (Low)
4. Position light/Daytime running light (DRL, LED Type) (if equipped)
5. Front turn signal light
6. Front fog light (if equipped)

1. Turn off the engine and open the hood.
2. Disconnect the power connector front the back of the headlight assembly.

Static bending light

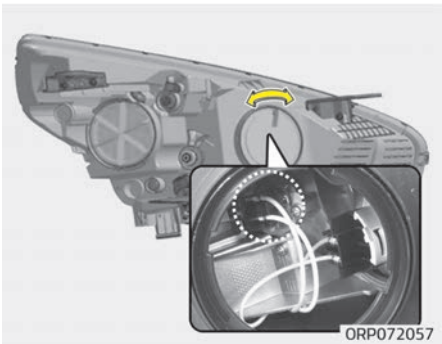

Follow the steps 1 to 2 from "Front light replacement" on page 8-89.

3. Remove the headlight bulb cover by turning it counterclockwise.
4. Disconnect the headlight bulb socket-connector.
5. Unsnap the headlight bulb retaining wire by depressing the end and pushing it upward.
6. Remove the bulb from the headlight assembly.
7. Install a new headlight bulb and snap the headlight bulb retaining wire into position by aligning the wire with the groove on the bulb.
8. Connect the headlight bulb socket connector.
9. Install the headlight bulb cover by turning it clockwise.
10. Connect the power connector to the back of the headlight assembly.

Headlight (Low, High Non-HID Type)

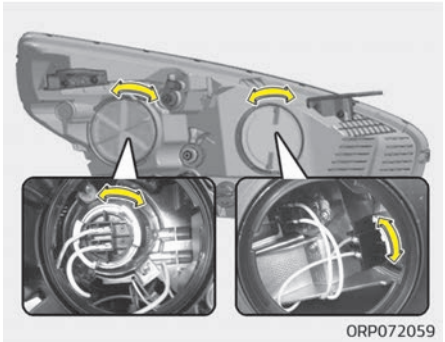

Follow the steps 1 to 2 from "Front light replacement" on page 8-89.

3. Remove the headlight bulb cover by turning it counterclockwise.
4. Remove the socket from the assembly by turning the socket counterclockwise until the tabs on the socket align with the slots on the assembly.
5. Pull the bulb out of the socket.
6. Insert a new bulb into the socket.

7. Install the socket in the assembly by aligning the tabs on the socket with the slots in the assembly. Push the socket into the assembly and turn the socket clockwise.
8. Install the headlight bulb cover by turning it clockwise.
9. Connect the power connector to the back of the headlight assembly.

✻ NOTICE

If the headlight aiming adjustment is necessary after the headlight assembly is reinstalled, consult a professional workshop for more details. Kia recommends to consult an authorized Kia dealer/service partner.

Headlight (Low, HID type), Position light/DRL (LED type)

If the light bulb does not operate, have your vehicle checked by a professional workshop. Kia recommends to visit an authorized Kia dealer/service partner.

⚠ WARNING

■ HID Headlight low beam (if equipped)

Do not attempt to replace or inspect the low beam (XENON bulb) due to electric shock danger. If the light bulb does not operate, have your vehicle checked by a professional workshop. Kia recommends to visit an authorized Kia dealer/service partner.

✻ NOTICE

HID lamps have superior performance vs. halogen bulbs. HID lamps are estimated by the manufacturer to last twice as long or longer than halogen bulbs depending on their frequency of use. They will probably require replacement at some point in the life of the vehicle. Cycling the headlamps on and off more than typical use will shorten HID lamps life. HID lamps do not fail in the

(Continued)

(Continued)

same manner as halogen incandescent lamps. If a headlamp goes out after a period of operation but will immediately relight when the headlamp switch is cycled it is likely the HID lamp needs to be replaced. HID lighting components are more complex than conventional halogen bulbs thus have higher replacement cost.

✻ Traffic Change (For Europe)

The low beam light distribution is asymmetric. If you go abroad to a country with opposite traffic direction, this asymmetric part will dazzle oncoming car driver. To prevent dazzle, ECE regulation demand several technical solutions (ex. automatic change system, adhesive sheet, down aiming). This headlamps are designed not to dazzle opposite drivers. So, you need not change your headlamps in a country with opposite traffic direction.

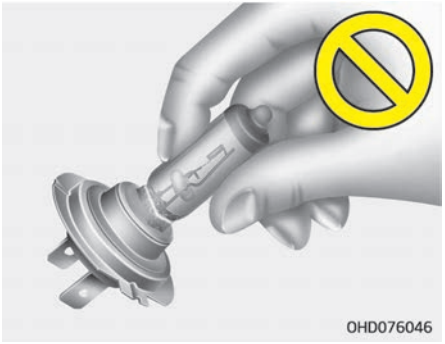

⚠ WARNING

■ Halogen bulbs

- **Halogen bulbs contain pressurized gas that will produce flying pieces of glass if broken.**

(Continued)

(Continued)

- **Always handle them carefully, and avoid scratches and abrasions. If the bulbs are lit, avoid contact with liquids. Never touch the glass with bare hands. Residual oil may cause the bulb to overheat and burst when lit.**
  A bulb should be operated only when installed in a headlight.
- **If a bulb is damaged or cracked, replace it immediately and carefully dispose of it.**
- **Wear eye protection when changing a bulb. Allow the bulb to cool down before handling it.**

Turn signal light

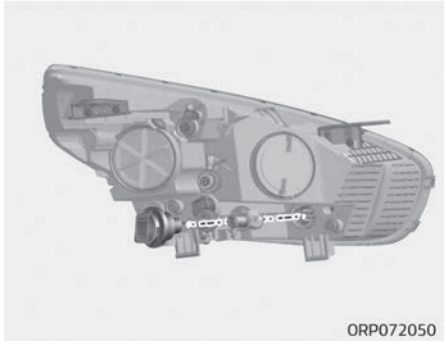

Follow the steps 1 to 2 from "Front light replacement" on page 8-89.

3. Remove the socket from the assembly by turning the socket counterclockwise until the tabs on the socket align with the slots on the assembly.
4. Remove the bulb from the socket by pressing it in and rotating it counterclockwise until the tabs on the bulb align with the slots in the socket. Pull the bulb out of the socket.

5. Insert a new bulb by inserting it into the socket and rotating it until it locks into place.
6. Install the socket in the assembly by aligning the tabs on the socket with the slots in the assembly. Push the socket into the assembly and turn the socket clockwise.

Front fog light (if equipped)



1. Pull the wheel guard down by rotating the screws.
2. Reach your hand into the back of the front bumper.
3. Disconnect the power connector from the socket.

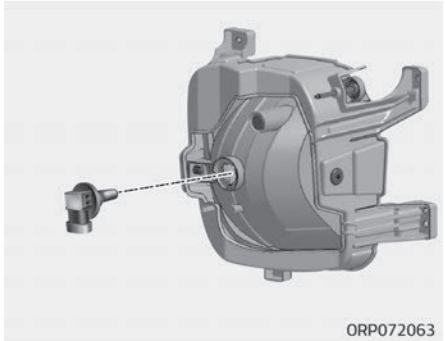

4. Remove the bulb-socket from the housing by turning the socket counter clockwise until the tabs on the socket align with the slots on the housing.
5. Install the new bulb-socket into the housing by aligning the tabs on the socket with the slots in the housing. Push the socket into the housing and turn the socket clockwise.
6. Connect the power connector to the socket.

Headlight and front fog light aiming (for Europe)

Headlight aiming

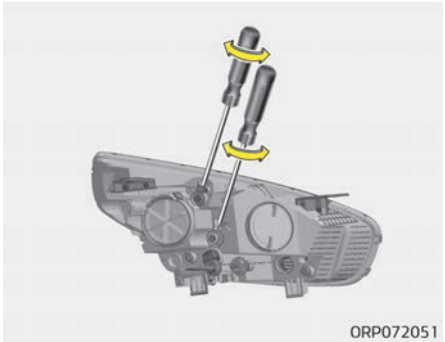

1. Inflate the tires to the specified pressure and remove any loads from the vehicle except the driver, spare tire, and tools.
2. The vehicle should be placed on a flat floor.
3. Draw vertical lines (Vertical lines passing through respective head lamp centers) and a horizontal line (Horizontal line passing through center of head lamps) on the screen.

4. With the head lamp and battery in normal condition, aim the head lamps so the brightest portion falls on the horizontal and vertical lines.
5. To aim the low beam left or right, turn the driver (1) clockwise or counterclockwise. To aim the low beam up or down, turn the driver (2) clockwise or counterclockwise.

Front fog light aiming



The front fog lamp can be aimed as the same manner of the head lamps aiming.

With the front fog lamps and battery normal condition, aim the front fog lamps. To aim the front fog lamp up or down, turn the driver clockwise or counterclockwise.

Aiming point

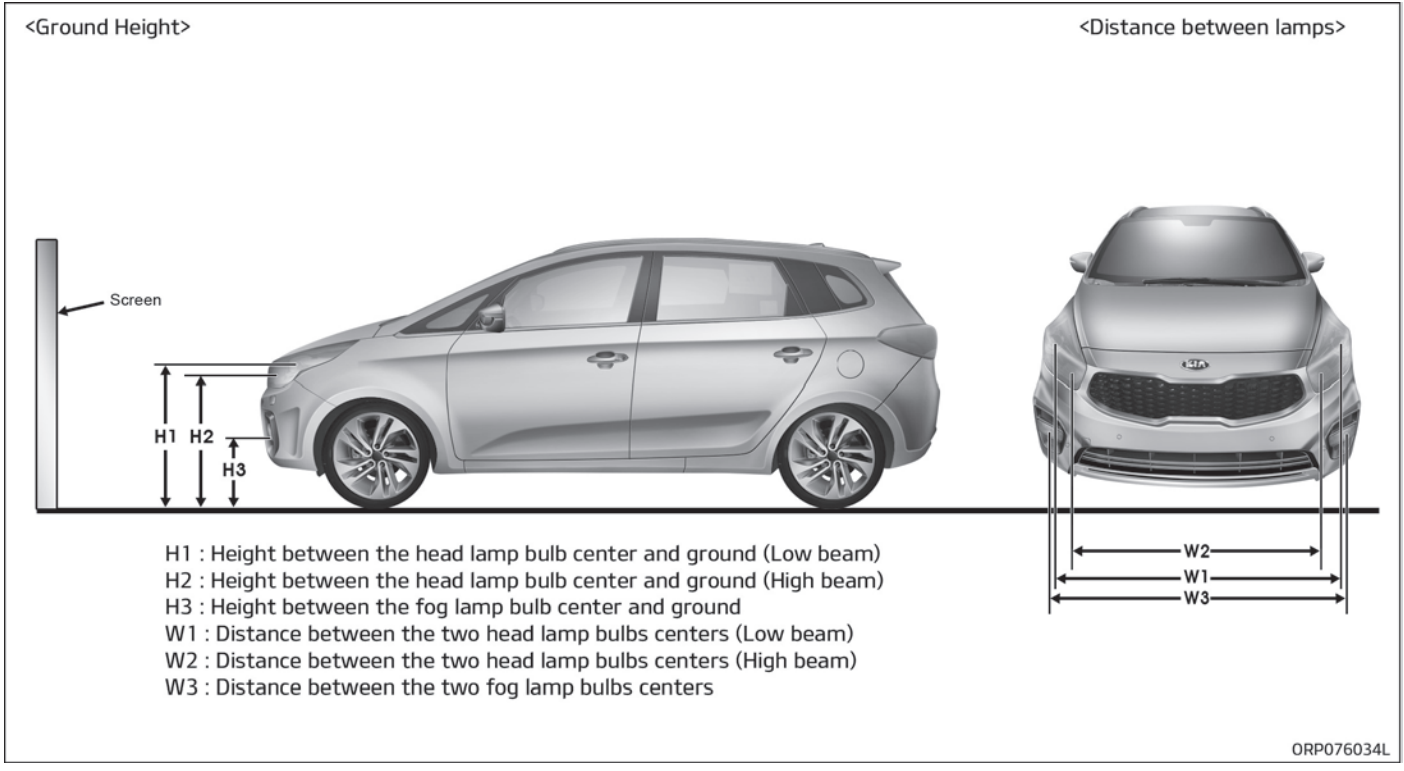

Unit: mm (in)

Vehicle condition	H1	H2	H3	W1	W2	W3
			Fog			Fog
Without driver	818 (32.2)	767 (30.2)	407 (16.0)	1,452 (57.2)	1,160 (45.7)	1,520 (59.8)
With driver	814 (32.0)	763 (30.0)	403 (15.9)			

Head lamp low beam (LHD)

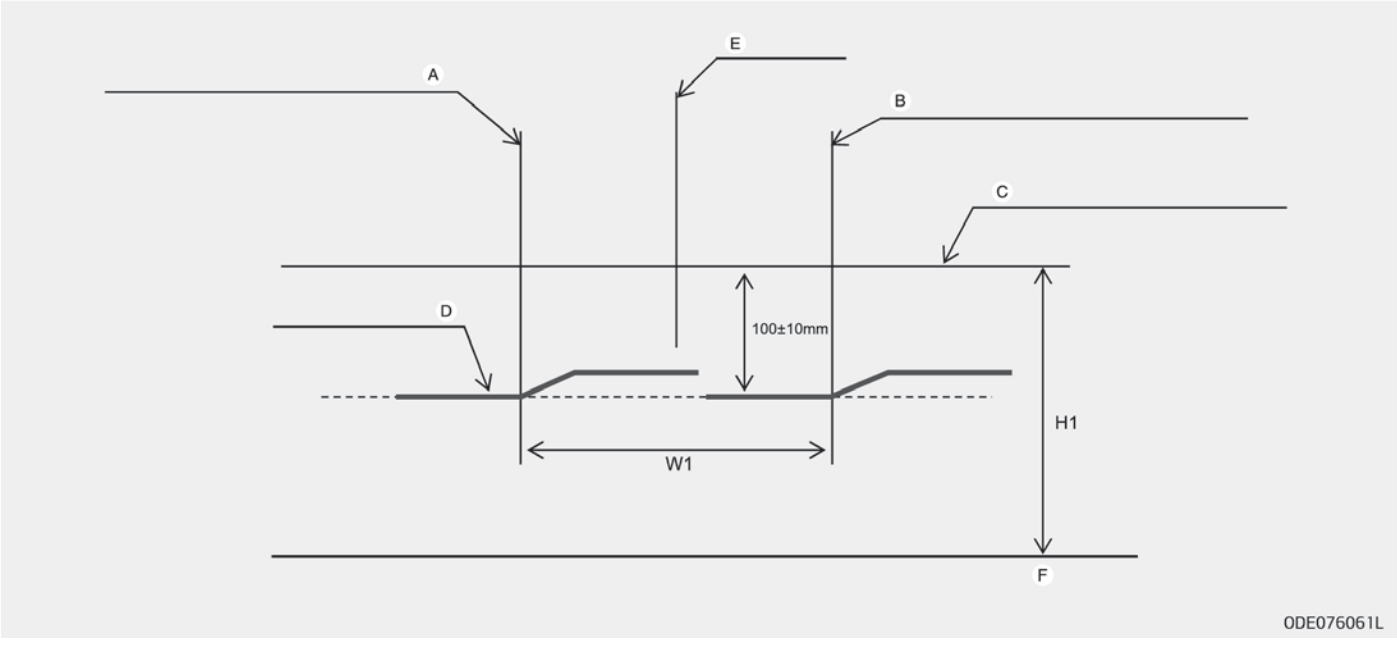

A: Vertical line of the left head lamp (low) bulb center
B: Vertical line of the right head lamp (low) bulb center
C: Horizontal line of head lamp (low) bulb center
D: Cut – Off line
E: Car Axis
F: Ground

1. Turn the low beam on without driver aboard.
2. The cut-off line should be projected in the cut-off line shown in the picture.
3. When aiming the low beam, vertical aiming should be adjusted after adjusting the horizontal aiming.
4. If head lamp leveling device is equipped, adjust the head lamp leveling device switch with 0 positions.

Front fog light

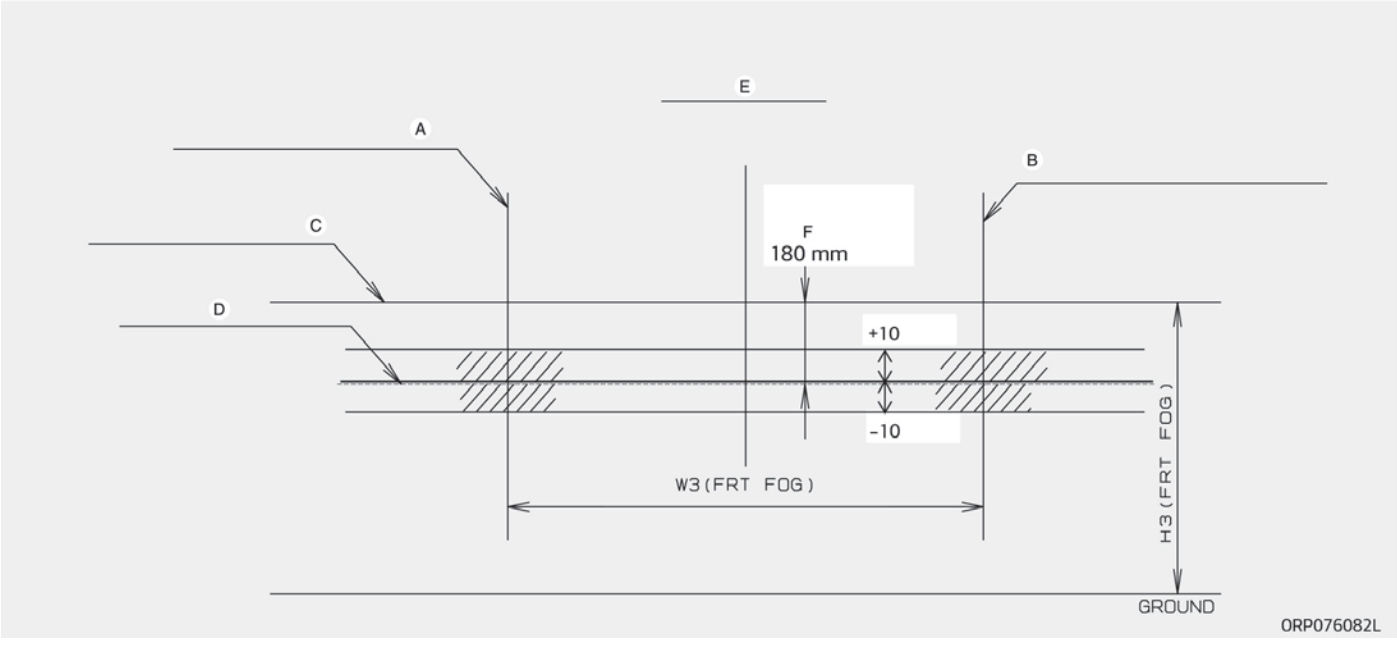

A: Vertical line of the left fog lamp bulb center
B: Vertical line of the right fog lamp bulb center
C: Horizontal line of fog lamp (low) bulb center
E: Car Axis
F: Upper limit
G: Ground

D: Cut – Off line

1. Turn the front fog lamp on without the driver aboard.
2. The cut-off line should be projected in the allowable range (shaded region).

Side repeater light bulb replacement

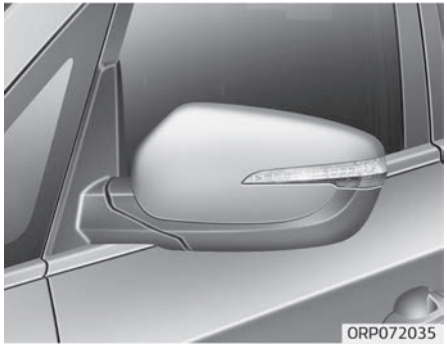

If the light bulb does not operate, have your vehicle checked by a professional workshop. Kia recommends to visit an authorized Kia dealer/service partner.

Rear combination light bulb replacement

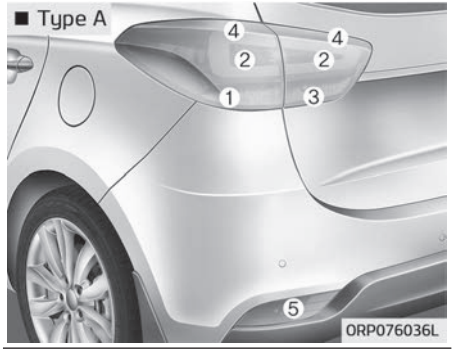

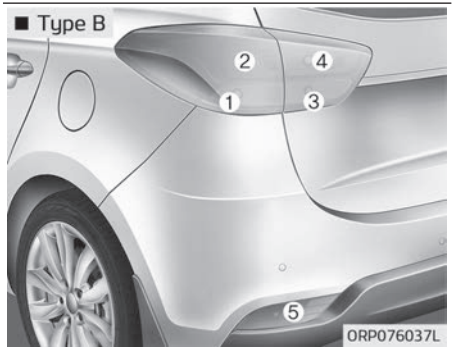

1. Rear turn signal light
2. Stop/tail light
3. Back-up light
4. Tail light or stop/tail light (for LED type)
5. Rear fog & Reflex reflector light

Outside light



✻ The actual rear combination lamp shape in the vehicle may differ from illustration.

Rear turn signal light and stop/tail light

1. Turn off the engine.
2. Open the tailgate.
3. Loosen the light assembly retaining screws with a cross-tip screwdriver.
4. Remove the rear combination light assembly from the body of the vehicle.

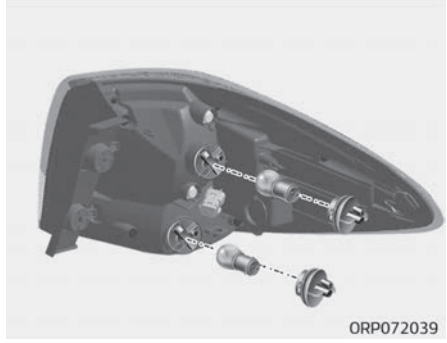

5. Remove the socket from the assembly by turning the socket counterclockwise until the tabs on the socket align with the slots on the assembly.
6. Remove the bulb from the socket by pressing it in and rotating it counterclockwise until the tabs on the bulb align with the slots in the socket. Pull the bulb out of the socket.

7. Insert a new bulb by inserting it into the socket and rotating it until it locks into place.
8. Install the socket in the assembly by aligning the tabs on the socket with the slots in the assembly. Push the socket into the assembly and turn the socket clockwise.
9. Reinstall the light assembly to the body of the vehicle.

Stop and tail light or tail light (LED type)

If the light bulb does not operate, have your vehicle checked by a professional workshop. Kia recommends to visit an authorized Kia dealer/service partner.

Inside light

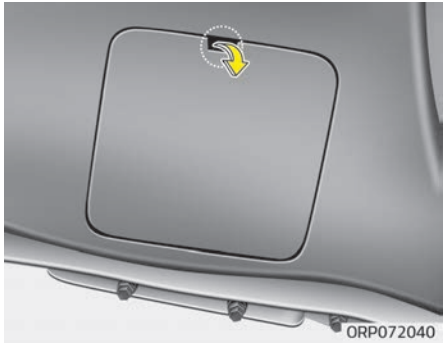

1. Turn off the engine.
2. Open the tailgate.
3. Remove the service cover using a flat-blade screwdriver.

Tail light/Back-up light (Bulb type)



1. Remove the socket from the assembly by turning the socket counterclockwise until the tabs on the socket align with the slots on the assembly.
2. Remove the bulb from the socket by pressing it in and rotating it counterclockwise until the tabs on the bulb align with the slots in the socket. Pull the bulb out of the socket. (Back-up lamp: Remove the bulb from the socket by pulling it out)

3. Insert a new bulb by inserting it into the socket and rotating it until it locks into place.
4. Install the socket in the assembly by aligning the tabs on the socket with the slots in the assembly. Push the socket into the assembly and turn the socket clockwise.
5. Install the service cover by putting it into the service hole.

Rear fog light (if equipped)

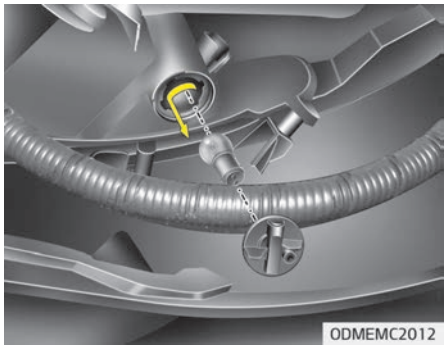

1. Remove the socket from the assembly by turning the socket counterclockwise until the tabs on the socket align with the slots on the assembly.
2. Pull the bulb out of the socket.
3. Insert a new bulb into the socket.
4. Install the socket into the assembly by aligning the tabs on the socket with the slots on the assembly and turning the socket clockwise.
5. Reinstall the light assembly to the body of the vehicle.

Tail light or stop and tail light (LED type)

If the light bulb does not operate, have your vehicle checked by a professional workshop. Kia recommends to visit an authorized Kia dealer/service partner.

High mounted stop light bulb replacement

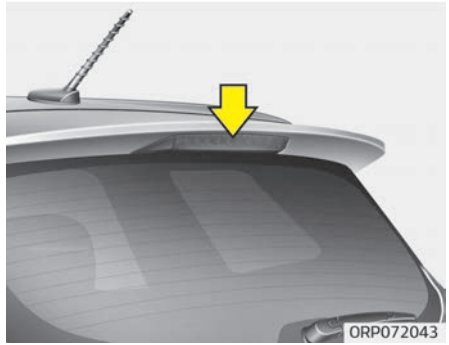

If the light bulb does not operate, have your vehicle checked by a professional workshop. Kia recommends to visit an authorized Kia dealer/service partner.

License plate light bulb replacement

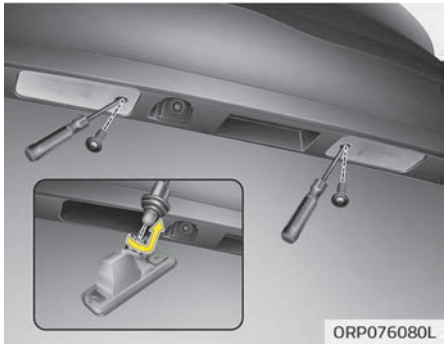

1. Remove the lens retaining screws with a Philips head screwdriver.
2. Remove the socket from the assembly by turning the socket counterclockwise.
3. Remove the bulb by pulling it straight out.
4. Install the socket into the assembly by aligning the tabs on the socket with the slots on the assembly and turning the socket clockwise.
5. Install a new bulb.
6. Reinstall the lens securely with the lens retaining screws.

■ Map lamp

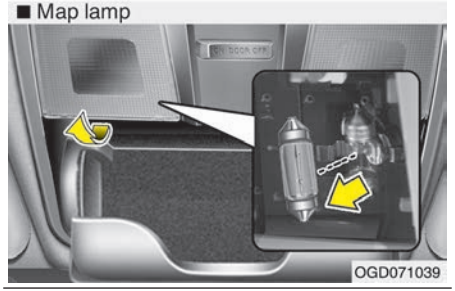

■ Vanity mirror lamp

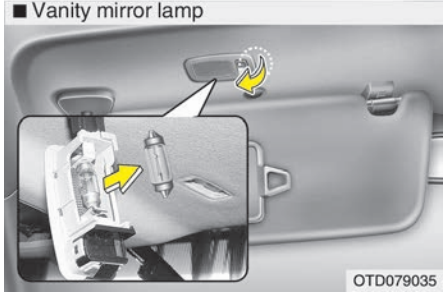

■ Luggage room lamp

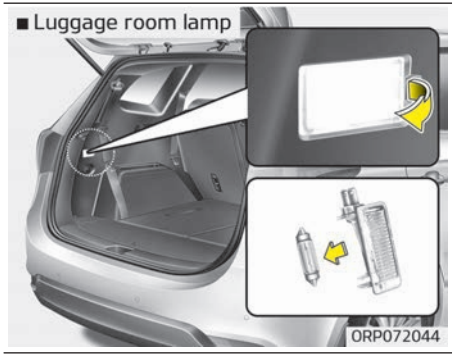

■ Foot lamp

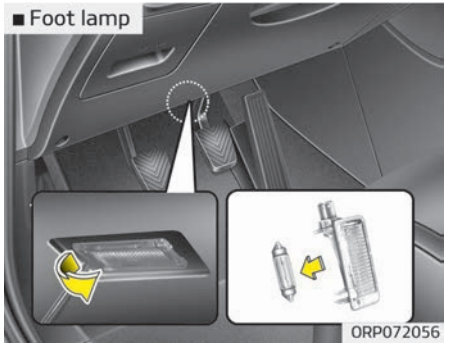

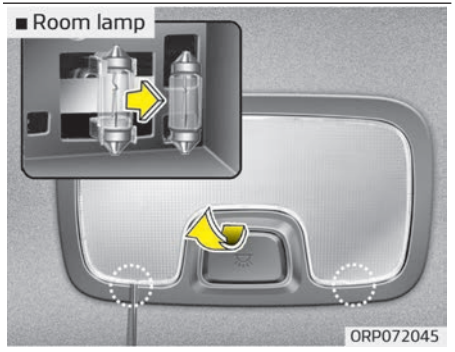

Interior light bulb replacement

Map lamp, vanity mirror lamp, room lamp, luggage room lamp and foot lamp

1. Using a flat-blade screwdriver, gently pry the lens from the interior light housing.
2. Remove the bulb by pulling it straight out.

⚠ WARNING

Prior to working on the interior lights, ensure that the light is off to
(Continued)

(Continued)

avoid burning your fingers or receiving an electric shock.

3. Install a new bulb in the socket.
4. Align the lens tabs with the interior light housing notches and snap the lens into place.

⚠ CAUTION

Be careful not to dirt or damage lens, lens tab, and plastic housings.

APPEARANCE CARE

Exterior care

Exterior general caution

It is very important to follow the label directions when using any chemical cleaner or polish. Read all warning and caution statements that appear on the label.

Finish maintenance

Washing

To help protect your vehicle's finish from rust and deterioration, wash it thoroughly and frequently at least once a month with lukewarm or cold water.

If you use your vehicle for off-road driving, you should wash it after each off-road trip. Pay special attention to the removal of any accumulation of salt, dirt, mud, and other foreign materials. Ensure drain holes in the lower edges of the doors and rocker panels are kept clean.

Insects, tar, tree sap, bird droppings, industrial pollution and similar deposits can damage your vehicle's finish if not removed immediately.

Even prompt washing with plain water may not completely remove all these deposits.

A mild soap, safe for use on painted surfaces, may be used.

After washing, rinse the vehicle thoroughly with lukewarm or cold water. Do not allow soap to dry on the finish.

⚠ CAUTION

- **Do not use strong soap, chemical detergents or hot water, and do not wash the vehicle in direct sunlight or when the body of the vehicle is warm.**
- **Be careful when washing the side windows of your vehicle. Especially, with high-pressure water, water may leak through the windows and wet the interior.**
- **To prevent damage to the plastic parts and lamps, do not clean with chemical solvents or strong detergents.**

⚠ WARNING

■ Wet brakes

After washing the vehicle, test the brakes while driving slowly to see if

(Continued)

(Continued)

they have been affected by water. If braking performance is impaired, dry the brakes by applying them lightly while maintaining a slow forward speed.

High-pressure washing

- When using high-pressure washers, make sure to maintain sufficient distance from the vehicle.
  Insufficient clearance or excessive pressure can lead to component damage or water penetration.
- Do not spray the camera, sensors or its surrounding area directly with a high pressure washer. Shock applied from high pressure water may cause the device to not operate normally.
- Do not bring the nozzle tip close to boots (rubber or plastic covers) or connectors as they may be damaged if they come into contact with high pressure water.

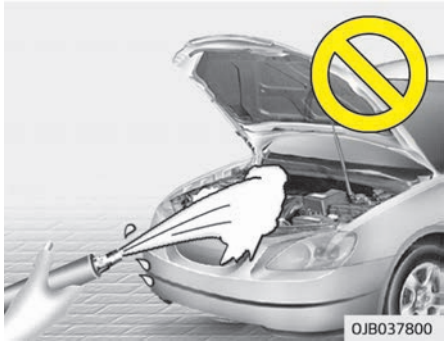

⚠ CAUTION

- **Water washing in the engine compartment including high pressure water washing may cause the failure of electrical circuits located in the engine compartment.**
- **Never allow water or other liquids to come in contact with electrical/electronic components and air duct inside the vehicle as this may damage them.**

Waxing

Wax the vehicle when water will no longer bead on the paint.

Always wash and dry the vehicle before waxing. Use a good quality liquid or paste wax, and follow the manufacturer's instructions. Wax all metal trim to protect it and to maintain its luster.
Removing oil, tar, and similar materials with a spot remover will usually strip the wax from the finish. Be sure to re-wax these areas even if the rest of the vehicle does not yet need waxing.

⚠ CAUTION

- **Wiping dust or dirt off the body with a dry cloth will scratch the finish.**
- **Do not use steel wool, abrasive cleaners, or strong detergents containing highly alkaline or caustic agents on chrome-plated or anodized aluminum parts. This may result in damage to the protective coating and cause discoloration or paint deterioration.**

Finish damage repair

Deep scratches or stone chips in the painted surface must be repaired promptly. Exposed metal will quickly rust and may develop into a major repair expense.

✻ NOTICE

If your vehicle is damaged and requires any metal repair or replacement, be sure the body shop applies anti-corrosion materials to the parts repaired or replaced.

Bright-metal maintenance

- To remove road tar and insects, use a tar remover, not a scraper or other sharp object.
- To protect the surfaces of bright-metal parts from corrosion, apply a coating of wax or chrome preservative and rub to a high luster.
- During winter weather or in coastal areas, cover the bright metal parts with a heavier coating of wax or preservative. If necessary, coat the parts with non-corrosive petroleum jelly or other protective compound.

Underbody maintenance

Corrosive materials used for ice and snow removal and dust control may collect on the underbody. If these materials are not removed, accelerated rusting can occur on underbody parts such as the fuel lines, frame, floor pan and exhaust system, even though they have been treated with rust protection. Thoroughly flush the vehicle underbody and wheel openings with lukewarm or cold water once a month, after off-road driving and at the end of each winter. Pay special attention to these areas because it is difficult to see all the mud and dirt. It will do more harm than good to wet down the road grime without removing it. The lower edges of doors, rocker panels, and frame members have drain holes that should not be allowed to clog with dirt; trapped water in these areas can cause rusting.

⚠ WARNING

After washing the vehicle, test the brakes while driving slowly to see if they have been affected by water. If braking performance is impaired, dry

(Continued)

(Continued)

the brakes by applying them lightly while maintaining a slow forward speed.

Aluminum wheel maintenance

The aluminum wheels are coated with a clear protective finish.

- Do not use any abrasive cleaner, polishing compound, solvent, or wire brushes on aluminum wheels. They may scratch or damage the finish.
- Clean the wheel when it has cooled.
- Use only a mild soap or neutral detergent, and rinse thoroughly with water. Also, be sure to clean the wheels after driving on salted roads. This helps prevent corrosion.
- Avoid washing the wheels with high-speed car wash brushes.
- Do not use any alkaline or acid detergent. It may damage and corrode the aluminum wheels coated with a clear protective finish.

Corrosion protection

Protecting your vehicle from corrosion

By using the most advanced design and construction practices to combat corrosion, we produce cars of the highest quality. However, this is only part of the job. To achieve the long-term corrosion resistance your vehicle can deliver, the owner's cooperation and assistance is also required.

Common causes of corrosion

The most common causes of corrosion on your car are:

- Road salt, dirt and moisture that is allowed to accumulate underneath the car.
- Removal of paint or protective coatings by stones, gravel, abrasion or minor scrapes and dents which leave unprotected metal exposed to corrosion.

High-corrosion areas

If you live in an area where your car is regularly exposed to corrosive materials, corrosion protection is particularly important. Some of the common causes of accelerated corrosion are road salts, dust control chemicals, ocean air and industrial pollution.

Moisture breeds corrosion

Moisture creates the conditions in which corrosion is most likely to occur. For example, corrosion is accelerated by high humidity, particularly when temperatures are just above freezing. In such conditions, the corrosive material is kept in contact with the car surfaces by moisture that is slow to evaporate.
Mud is particularly corrosive because it is slow to dry and holds moisture in contact with the vehicle. Although the mud appears to be dry, it can still retain the moisture and promote corrosion.
High temperatures can also accelerate corrosion of parts that are not properly ventilated so the moisture can be dispersed. For all these reasons, it is particularly important to keep your car clean and free of mud or accumulations of other materials. This applies not only to the visible surfaces but particularly to the underside of the car.

To help prevent corrosion

You can help prevent corrosion from getting started by observing the following:

Keep your car clean

The best way to prevent corrosion is to keep your car clean and free of corrosive materials. Attention to the underside of the car is particularly important.

- If you live in a high-corrosion area — where road salts are used, near the ocean, areas with industrial pollution, acid rain, etc.—, you should take extra care to prevent corrosion. In winter, hose off the underside of your car at least once a month and be sure to clean the underside thoroughly when winter is over.
- When cleaning underneath the car, give particular attention to the components under the fenders and other areas that are hidden from view. Do a thorough job; just dampening the accumulated mud rather than washing it away will accelerate corrosion rather than prevent it. Water under high pressure and steam are particularly effective in removing accumulated mud and corrosive materials.
- When cleaning lower door panels, rocker panels and frame members, be sure that drain holes are kept open so that moisture can escape and not be trapped inside to accelerate corrosion.

Keep your garage dry

Don't park your car in a damp, poorly ventilated garage. This creates a favorable environment for corrosion. This is particularly true if you wash your car in the garage or drive it into the garage when it is still wet or covered with snow, ice or mud. Even a heated garage can contribute to corrosion unless it is well ventilated so moisture is dispersed.

Keep paint and trim in good condition

Scratches or chips in the finish should be covered with "touch-up" paint as soon as possible to reduce the possibility of corrosion. If bare metal is showing through, the attention of a qualified body and paint shop is recommended.
Bird droppings: Bird droppings are highly corrosive and may damage painted surfaces in just a few hours. Always remove bird droppings as soon as possible.

Don't neglect the interior

Moisture can collect under the floor mats and carpeting to cause corrosion. Check under the mats periodically to be sure the carpeting is dry. Use particular care if you carry fertilizers, cleaning materials or chemicals in the car.
These should be carried only in proper containers and any spills or leaks should be cleaned up, flushed with clean water and thoroughly dried.

Interior care

Interior general precautions

Prevent chemicals such as perfume, cosmetic oil, sun cream, hand cleaner, and air freshener from contacting the interior parts because they may cause damage or discoloration. If they do contact the interior parts, wipe them off immediately.
See the instructions that follow for the proper way to clean vinyl.

⚠ CAUTION

Never allow water or other liquids to come in contact with electrical/electronic components inside the vehicle as this may damage them.

⚠ CAUTION

When cleaning leather products (steering wheel, seats etc.), use neutral detergents or low alcohol content solutions. If you use high alcohol content solutions or acid/alkaline detergents, the color of the
(Continued)

(Continued)

leather may fade or the surface may get stripped off.

Taking care of leather seats

- Vacuum the seat periodically to remove dust and sand on the seat. It will prevent abrasion or damage of the leather and maintain its quality.
- Wipe the natural leather seat cover often with dry or soft cloth.
- Sufficient use of a leather protective may prevent abrasion of the cover and helps maintain the color.
  Be sure to read the instructions and consult a specialist when using leather coating or protective agents.
- Leather with bright colors(beige, cream beige) is easily contaminated and clear in appearance. Clean the seats frequently.
- Avoid wiping with wet cloth. It may cause the surface to crack.

Cleaning the leather seats

- Remove all contaminations instantly. Refer to instructions below for removal of each contaminant.
- Cosmetic products(sunscreen, foundation, etc.)
  - Apply cleansing cream on a cloth and wipe the contaminated point. Wipe off the cream with a wet cloth and remove water with a dry cloth.
- Beverages(coffee, soft drink, etc.)
  - Apply a small amount of neutral detergent and wipe until contaminations do not smear.
- Oil
  - Remove oil instantly with absorbable cloth and wipe with stain remover for natural leather only.
- Chewing gum
  - Harden the gum with ice and remove gradually.

Fabric seat cover using precautions (If equipped)

Please clean the fabric seats regularly with a vacuum cleaner in consideration of fabric material characteristics. If they are heavily soiled with beverage stains, etc., use a suitable interior cleaner. To prevent damage to seat covers, wipe off the seat covers down to the seams with a large wiping motion and moderate pressure using a soft sponge or microfiber cloth. Velcro closures on clothing or sharp objects may cause snagging or scratches on the surface of the seats. Make sure not to rub such objects against the surface.

Cleaning the upholstery and interior trim

Vinyl

Remove dust and loose dirt from vinyl with a whisk broom or vacuum cleaner. Clean vinyl surfaces with a vinyl cleaner.

Fabric

Remove dust and loose dirt from fabric with a whisk broom or vacuum cleaner. Clean with a mild soap solution recommended for upholstery or carpets. Remove fresh spots immediately with a fabric spot cleaner. If fresh spots do not receive immediate attention, the fabric can be stained and its color can be affected. Also, its fire-resistant properties can be reduced if the material is not properly maintained.

⚠ CAUTION

Using anything but recommended cleaners and procedures may affect the fabric's appearance and fire-resistant properties.

Cleaning the lap/shoulder belt webbing

Clean the belt webbing with any mild soap solution recommended for cleaning upholstery or carpet. Follow the instructions provided with the soap. Do not bleach or re-dye the webbing because this may weaken it.

Cleaning the interior window glass

If the interior glass surfaces of the vehicle become fogged (that is, covered with an oily, greasy or waxy film), they should be cleaned with glass cleaner. Follow the directions on the glass cleaner container.

⚠ CAUTION

Do not scrape or scratch the inside of the rear window. This may result in damage to the rear window defroster grid.

EMISSION CONTROL SYSTEM

The emission control system of your vehicle is covered by a written limited warranty. Please see the warranty information contained in the Warranty & Maintenance book in your vehicle.
Your vehicle is equipped with an emission control system to meet all emission regulations.
There are three emission control systems which are as follows.

1. Crankcase emission control system
2. Evaporative emission control system
3. Exhaust emission control system

In order to assure the proper function of the emission control systems, have your vehicle inspected and maintained by a professional workshop in accordance with the maintenance schedule in this manual. Kia recommends to visit an authorized Kia dealer/service partner.

Caution for the Inspection and Maintenance Test (With Electronic Stability Control (ESC) system)

- **To prevent the vehicle from misfiring during dynamometer testing, turn the Electronic Stability Control (ESC) system off by pressing the ESC switch.**
- **After dynamometer testing is completed, turn the ESC system back on by pressing the ESC switch again.**

1. Crankcase emission control system

The positive crankcase ventilation system is employed to prevent air pollution caused by blow-by gases being emitted from the crankcase. This system supplies fresh filtered air to the crankcase through the air intake hose. Inside the crankcase, the fresh air mixes with blow-by gases, which then pass through the PCV valve into the induction system.

2. Evaporative emission control system

The Evaporative Emission Control System is designed to prevent fuel vapors from escaping into the atmosphere.

Canister

Fuel vapors generated inside the fuel tank are absorbed and stored in the onboard canister. When the engine is running, the fuel vapors absorbed in the canister are drawn into the surge tank through the purge control solenoid valve.

Purge Control Solenoid Valve (PCSV)

The purge control solenoid valve is controlled by the Engine Control Module (ECM); when the engine coolant temperature is low during idling, the PCSV closes so that evaporated fuel is not taken into the engine. After the engine warms-up during ordinary driving, the PCSV opens to introduce evaporated fuel to the engine.

Canister

Fuel vapors generated inside the fuel tank are absorbed and stored in the onboard canister. When the engine is running, the fuel vapors absorbed in the canister are drawn into the surge tank through the purge control solenoid valve.

Purge Control Solenoid Valve (PCSV)

The purge control solenoid valve is controlled by the Engine Control Module (ECM); when the engine coolant temperature is low during idling, the PCSV closes so that evaporated fuel is not taken into the engine. After the engine warms-up during ordinary driving, the PCSV opens to introduce evaporated fuel to the engine.

3. Exhaust emission control system

The Exhaust Emission Control System is a highly effective system which controls exhaust emissions while maintaining good vehicle performance.

Vehicle modifications

This vehicle should not be modified. Modification of your vehicle could affect its performance, safety or durability and may even violate governmental safety and emissions regulations.
In addition, damage or performance problems resulting from any modification may not be covered under warranty.

- If you use unauthorized electronic devices, it may cause the vehicle to operate abnormally, wire damage, battery discharge or fire. For your safety, do not use unauthorized electric devices.

Engine exhaust gas precautions (carbon monoxide)

- Carbon monoxide can be present with other exhaust fumes. Therefore, if you smell exhaust fumes of any kind inside your vehicle, have it inspected and repaired immediately. If you ever suspect exhaust fumes are coming into your vehicle, drive it only with all the windows fully open. Have your vehicle checked and repaired immediately.

⚠ WARNING

■ Exhaust

Engine exhaust gases contain carbon monoxide (CO). Though colorless and odorless, it is dangerous and could be lethal if inhaled. Follow the instructions following to avoid CO poisoning.

- Do not operate the engine in confined or closed areas (such as garages) any more than what is necessary to move the vehicle in or out of the area.
- When the vehicle is stopped in an open area for more than a short time with the engine running, adjust the ventilation system (as needed) to draw outside air into the vehicle.
- Never sit in a parked or stopped vehicle for any extended time with the engine running.
- When the engine stalls or fails to start, excessive attempts to restart the engine may cause damage to the emission control system.

Operating precautions for catalytic converters (if equipped)

⚠ WARNING

■ Fire

- **A hot exhaust system can ignite flammable items under your vehicle. Do not park, idle, or drive the vehicle over or near flammable objects, such as dry grass, paper, leaves, etc.**

(Continued)

(Continued)

- **The exhaust system and catalytic system are very hot while the engine is running or immediately after the engine is turned off. Keep away from the exhaust system and catalytic. You may get burned. Also, do not remove the heat sink around the exhaust system, do not seal the bottom of the vehicle or do not coat the vehicle for corrosion control. It may present a fire risk under certain conditions.**

Your vehicle is equipped with a catalytic converter emission control device.
Therefore, the following precautions must be observed:

- Make sure to refuel your vehicle according to the "Fuel requirements" on page 1-03.
- Do not operate the vehicle when there are signs of engine malfunction, such as misfire or a noticeable loss of performance.
- Do not misuse or abuse the engine. Examples of misuse are coasting with the ignition off and descending steep grades in gear with the ignition off.
- Do not operate the engine at high idle speed for extended periods (5 minutes or more).
- Do not modify or tamper with any part of the engine or emission control system. All inspections and adjustments must be made by a professional workshop. Kia recommends to visit an authorized Kia dealer/service center.
- Avoid driving with an extremely low fuel level. Running out of fuel cause the engine to misfire, damaging the catalytic converter.

Failure to observe these precautions could result in damage to the catalytic converter and to your vehicle. Additionally, such actions could void your warranties.

Diesel Particulate Filter (if equipped)

The Diesel Particulate Filter (DPF) system removes the soot in the exhaust gas.

Unlike a disposable air filter, the DPF system automatically burns (oxidizes) and removes the accumulated soot according to the driving condition. In other words, the active burning by engine control system and high exhaust gas temperature caused by normal/high driving condition burns and removes the accumulated soot.
However, if the vehicle continues to be driven at repeated short distance or driven at low speed for a long time, the accumulated soot may not be automatically removed because of low exhaust gas temperature. More than a certain amount of soot deposited, the malfunction indicator light () illuminates.
When the malfunction indicator light blinks, it may stop blinking by driving the vehicle at more than 60 km/h (37 mph) or at more than second gear with 1500~2500 engine rpm for a certain time (for about 25 minutes).
If the malfunction indicator light () continues to be blinked or the warning massage "Check exhaust system" illuminates in spite of the procedure, visit a professional workshop and check the DPF system. Kia recommends to visit an authorized Kia dealer/service partner.

If you continue to drive with the malfunction indicator light blinking for a long time, the DPF system can be damaged and fuel consumption can be worsen.

⚠ CAUTION

Diesel Fuel (if equipped with DPF)
It is recommended to use the regulated automotive diesel fuel for diesel vehicle equipped with the DPF system.
If you use diesel fuel including high sulfur (more than 50 ppm sulfur) and unspecified additives, it can cause the DPF system to be damaged and white smoke can be emitted.

Lean NOx Trap (if equipped)

The Lean NOx Trap (LNT) system removes the nitrogen oxide in the exhaust gas. The smell can occur in the exhaust gas depending on the quality of the fuel and it can degrade NOx reduction performance, please use the regulated automotive diesel fuel.

Specifications & Consumer information

Dimensions..... 9-02
Engine..... 9-03
Gross vehicle weight..... 9-04
Luggage volume..... 9-06
Bulb wattage..... 9-07
Tires and wheels..... 9-09
Recommended lubricants and capacities..... 9-11
  Recommended SAE viscosity number..... 9-13
Vehicle Identification Number (VIN)..... 9-15
Vehicle certification label..... 9-16
Tire specification and pressure label..... 9-17
Engine number..... 9-18
Air conditioner compressor label..... 9-19
Refrigerant label..... 9-20
Declaration of conformity..... 9-21

DIMENSIONS

Item		mm (in)
Overall length		4,525 (178.1)
Overall width		1,805 (71.1)
Overall height		1,610 (63.4)
Front tread	205/55 R16	1,573 (61.9)
	225/45 R17	1,569 (61.8)
	225/45 R18	1,563 (61.5)
Rear tread	205/55 R16	1,586 (62.4)
	225/45 R17	1,582 (62.3)
	225/45 R18	1,576 (62.0)
Wheelbase		2,750 (108.3)

ENGINE

Item	Gasoline 1.6L	Gasoline 2.0L	Diesel 1.7L
Displacement [cc (cu. in)]	1,591 (97.09)	1,999 (121.99)	1,685 (102.83)
Bore x Stroke [mm (in.)]	77 x 85.4 (3.03 x 3.36)	81 x 97 (3.19 x 3.82)	77.2 x 90 (3.04 x 3.54)
Firing order	1-3-4-2	1-3-4-2	1-3-4-2
No. of cylinders	4, in-line	4, in-line	4, in-line

GROSS VEHICLE WEIGHT

For Europe

Item			Gasoline 1.6L	Gasoline 2.0L		Diesel 1.7L	
Gross vehicle weight kg (lbs.)	M/T	5 Seater	2,000 (4,409)	MPI	2,030 (4,475)	2,110 (4,652)	
				GDI	2,040 (4,497)		
		7 Seater	2,140 (4,718)	MPI	2,170 (4,784)	High	2,250 (4,960)
				GDI	2,180 (4,806)	Low	2,240 (4,938)
	A/T	5 Seater	-	MPI	2,060 (4,542)	-	
			-	GDI	2,060 (4,542)		
		7 Seater	-	MPI	2,200 (4,850)	-	
			-	GDI	2,200 (4,850)		
	DCT	5 Seater	-	-		2,130 (4,696)	
		7 Seater				2,270 (5,004)	

Except Europe

Item			Gasoline 1.6L	Gasoline 2.0L		Diesel 1.7L
Gross vehicle weight kg (lbs.)	M/T	5 Seater	1,990 (4,387)	MPI	2,030 (4,475)	2,100 (4,630)
				GDI	-	
		7 Seater	2,150 (4,740)	MPI	2,180 (4,806)	2,240 (4,938)
				GDI	-	
	A/T	5 Seater	2,020 (4,453)	MPI	2,050 (4,519)	-
				GDI	-	
		7 Seater	2,150 (4,740)	MPI	2,210 (4,872)	-
				GDI	-	
	DCT	5 Seater	-	-		2,100 (4,630)
		7 Seater				2,240 (4,938)

M/T: Manual transaxle
A/T: Automatic transaxle
DCT: Dual clutch transmission

LUGGAGE VOLUME

Item		5 Seater	7 Seater
VDA	MIN.	536 l (18.9 cu ft)	492 l (17.4 cu ft)
	MAX.	1,694 l (59.8 cu ft)	1,650 l (58.3 cu ft)

Min: Behind rear seat to upper edge of the seat back.
Max: Behind front seat to roof.

BULB WATTAGE

Light Bulb			Wattage	Bulb type
Front	Headlamps (Low)		55	H7L
	Headlamps (Low) - HID type*		35	D3S
	Headlamps (High)		55	H7L
	Front turn signal lamps*		21	PY21W
	Front position lamps*		LED	LED
	Front fog lamps*		35	H8LL
	Side repeater lamps*		5	WY5W
	Static bending lamps*		55	H7L
	Daytime running lamps*		LED	LED
Rear	Rear fog lamps*		21	P21W
	Bulb type	Rear Stop/Tail lamps (outside)	21/5	P21/5W
		Rear tail lamps (Inside)	5	P21/5W
	LED type	Rear Stop/Tail lamps (outside)	LED	LED
		Rear tail lamps (Inside)	LED	LED
	Rear turn signal lamps		21	PY21W
	Back-up lamps		16	W16W
	High mounted stop lamp*		LED	LED
	License plate lamps		5	W5W

* : if equipped

Light Bulb			Wattage	Bulb type
Interior	Map lamps		10 or LED	10W or LED
	Room lamps	Type A	10	10W
		Type B	LED	LED
	Vanity mirror lamps		5	FESTOON
	Luggage lamp		5 or LED	FESTOON or LED
	Portable lamp*		LED	LED

* : if equipped

TIRES AND WHEELS

Item	Tire size	Wheel size	Load capacity		Speed capacity		Inflation pressure [bar (psi, kPa)]				Wheel lug nut torque kgf·m (lbf·ft, N·m)
							Normal load		Maximum load		
			LI*1	Kg	SS*2	Km/h	Front	Rear	Front	Rear	
Full size tire	205/55 R16	6.5J×16	91	615	V	240	2.3 (33,230)	2.3 (33,230)	2.3 (33,230)	2.5 (36,250)	11~13 (79~94, 107~127)
	205/55 R16 LRR	6.5J×16	91	615	H	210	2.4 (35,240)	2.4 (35,240)	2.4 (35,240)	2.5 (36,250)	
	225/45 R17	7.0J×17	91	615	V	240	2.3 (33,230)	2.3 (33,230)	2.3 (33,230)	2.5 (36,250)	
	225/45 R18	7.5J×18	95	690	V	240	2.3 (33,230)	2.3 (33,230)	2.3 (33,230)	2.5 (36,250)	
Compact spare tire (if equipped)*3	T125/80D16	4.0T×16	97	730	M	80	4.2 (60,420)	4.2 (60,420)	4.2 (60,420)	4.2 (60,420)	

*1 Load Index
*2 Speed Symbol
*3 If the compact spare tire does not provide, the TMK will be provided. For further information on the TMK, refer to "Tire Mobility Kit" on page 7-23.

⚠ CAUTION

When replacing tires, use the same size originally supplied with the vehicle.
Using tires of a different size can damage the related parts or make it work irregularly.

✻ NOTICE

- We recommend that when replacing tires, use the same originally supplied with the vehicles. If not, that affects driving performance.
- When driving in high altitude grades, it is natural for the atmospheric pressure to decrease. Therefore, please check the tire pressure and add more air when necessary.
  Additionally required tire air pressure per km above sea level: 10.5 kpa (1.5 psi)/km

RECOMMENDED LUBRICANTS AND CAPACITIES

To help achieve proper engine and powertrain performance and durability, use only lubricants of the proper quality.
The correct lubricants also help promote engine efficiency that results in improved fuel economy.
These lubricants and fluids are recommended for use in your vehicle.

Lubricant			Volume	Classification
Engine oil[*1*2] (drain and refill) Recommends 	Gasoline engine	1.6L GDI	3.6 l (3.8 US qt.)	**For Europe GDI** ACEA A5[*3] **Except Europe GDI** ILSAC GF-4 (API Service SM) or above, ACEA A5
		2.0L GDI	4.0 l (4.2 US qt.)	
		2.0L MPI	4.0 l (4.2 US qt.)	ILSAC GF-4 (API Service SM) or above
	Diesel engine		5.3 l (5.6 US qt.)	ACEA C2 or C3
Manual transaxle fluid	Gasoline engine	1.6L	1.6 l ~ 1.7 l (1.7~1.8 US qt.)	API GL-4, SAE 75W/85
		2.0L	1.7 l ~ 1.8 l (1.8~1.9 US qt.)	
	Diesel engine	High	1.8 l ~ 1.9 l (1.9~2.0 US qt.)	
		Low	1.7 l ~ 1.8 l (1.8~1.9 US qt.)	
Automatic transaxle fluid	Gasoline engine	1.6L	7.3 l (7.7 US qt.)	ATF SP-IV (Recommended Kia genuine, Michang, SK, S-OIL, NOCA)
		2.0L	7.2 l (7.6 US qt.)	
DCT (Dual Clutch Transmission) fluid	Diesel engine		1.9~2.0 l (2.0~2.1 US qt.)	API GL-4, SAE 70W

Lubricant				Volume	Classification
Coolant	Gasoline engine	1.6L	M/T	6.2 l (6.6 US qt.)	Mixture of antifreeze and distilled water (Ethylene glycol base coolant for aluminum radiator)
			A/T	6.0 l (6.3 US qt.)	
		2.0L	M/T	6.3 l (6.7 US qt.)	
			A/T	6.0 l (6.3 US qt.)	
	Diesel engine	M/T		7.0 l ~ 7.1 l	
		DCT		7.0 l ~ 7.1 l	
Brake/clutch fluid				0.7~0.8 l (0.7~0.8 US qt.)	FMVSS116 DOT-3 or DOT-4
Fuel				58 l (15.3 US gal.)	Refer to "Fuel requirements" on page 1-03.

*1 Refer to "Recommended SAE viscosity number" on page 9-13.
*2 Engine oils labeled Energy Conserving Oil are now available. Along with other additional benefits, they contribute to fuel economy by reducing the amount of fuel necessary to overcome engine friction. Often, these improvements are difficult to measure in everyday driving, but in a year's time, they can offer significant cost and energy savings.
*3 If you replace the engine oil, we recommend to contact a Kia workshop or equally qualified workshop.

M/T: Manual transaxle
A/T: Automatic transaxle

Recommends Engine Oil (For Europe)

Supplier	Diesel Engine
Shell	HELIX ULTRA AP 5W-30 HELIX ULTRA AP-L 5W-30

Recommended SAE viscosity number

⚠ CAUTION

Always be sure to clean the area around any filler plug, drain plug, or dipstick before checking or draining any lubricant. This is especially important in dusty or sandy areas and when the vehicle is used on unpaved roads. Cleaning the plug and dipstick areas will prevent dirt and grit from entering the engine and other mechanisms that could be damaged.

Engine oil viscosity (thickness) has an effect on fuel economy and cold weather operating (engine start and engine oil flowability). Lower viscosity engine oils can provide better fuel economy and cold weather performance, however, higher viscosity engine oils are required for satisfactory lubrication in hot weather. Using oils of any viscosity other than those recommended could result in engine damage. When choosing an oil, consider the range of temperature your vehicle will be operated in before the next oil change. Proceed to select the recommended oil viscosity from the chart.

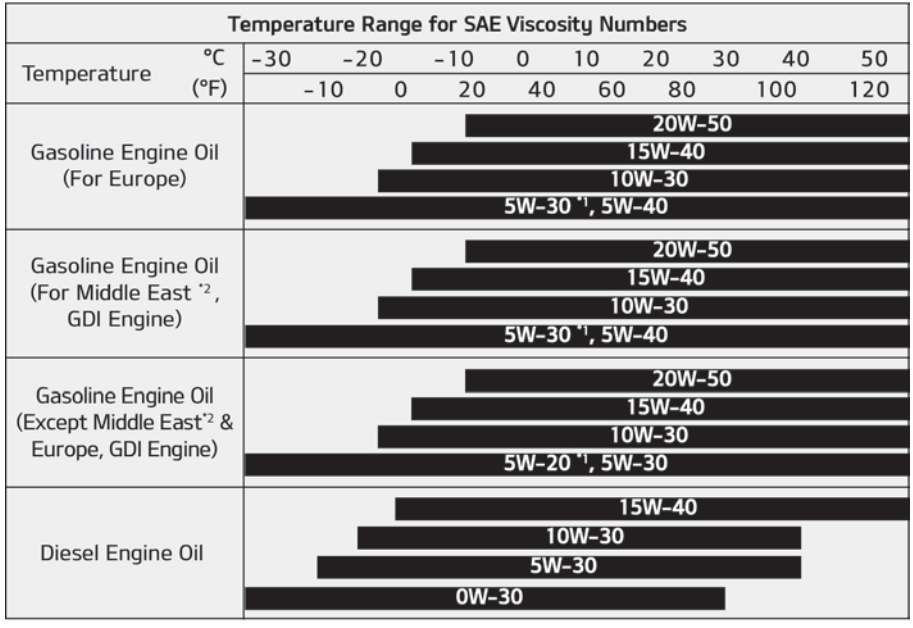

*1 : For better fuel economy, it is recommended to use the engine oil of a viscosity grade SAE 5W-20 (Except Middle East & Europe, GDI Engine) or 5W-30 (For Middle East, GDI Engine). However, if the engine oil is not available in your country, select the proper engine oil using the engine oil viscosity chart.

*2 : Middle East includes Libya, Algeria, Morocco, Tunisia, Sudan, Egypt and Iran.

VEHICLE IDENTIFICATION NUMBER (VIN)

■ Frame number

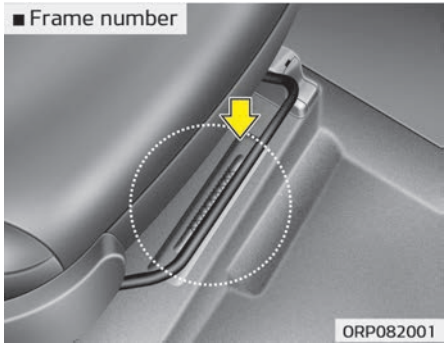

The vehicle identification number (VIN) is the number used in registering your vehicle and in all legal matters pertaining to its ownership, etc.
The number is punched on the floor under the passenger seat. To check the number, open the cover.

■ VIN label (if equipped)

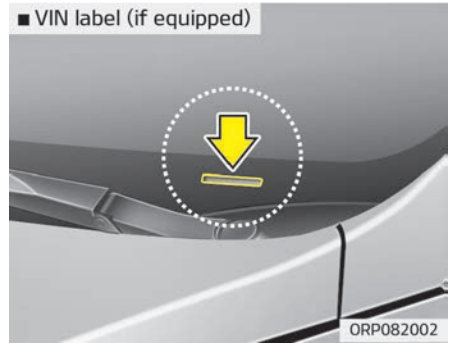

The VIN is also on a plate attached to the top of the dashboard. The number on the plate can easily be seen through the windshield from outside.

VEHICLE CERTIFICATION LABEL

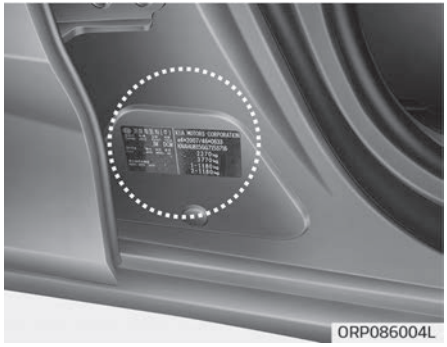

The vehicle certification label attached on the driver's (or front passenger's) side center pillar gives the vehicle identification number (VIN).

TIRE SPECIFICATION AND PRESSURE LABEL

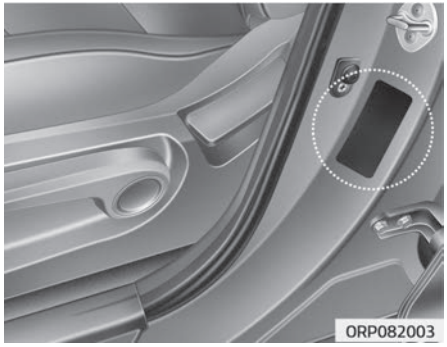

The tires supplied on your new vehicle are chosen to provide the best performance for normal driving.
The tire label located on the driver's side center pillar gives the tire pressures recommended for your vehicle.

ENGINE NUMBER

■ Gasoline engine (1.6L)

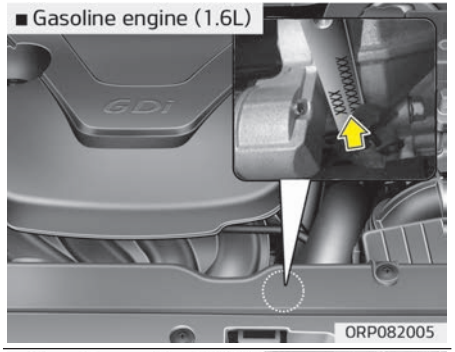

■ Gasoline engine (2.0L)

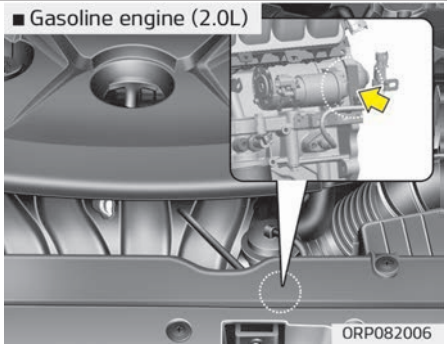

■ Diesel engine

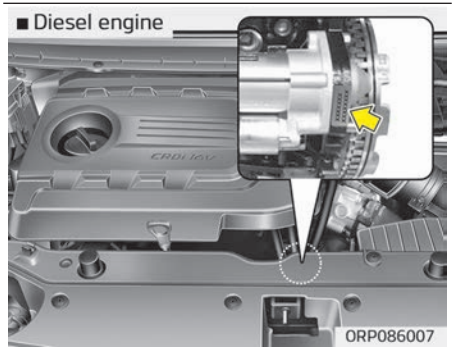

The engine number is stamped on the engine block as shown in the drawing.

AIR CONDITIONER COMPRESSOR LABEL

■ Type A

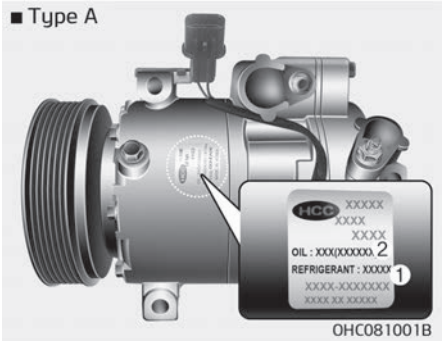

OHC081001B

■ Type B

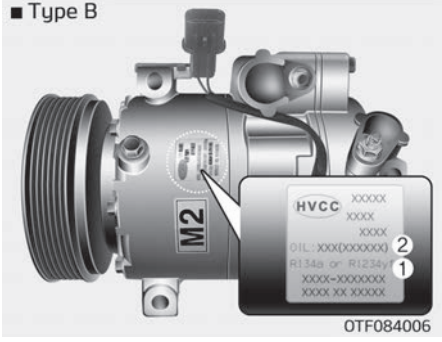

OTF084006

A compressor label informs you the type of compressor your vehicle is equipped with such as model, supplier part number, production number, refrigerant (1) and refrigerant oil (2).

REFRIGERANT LABEL

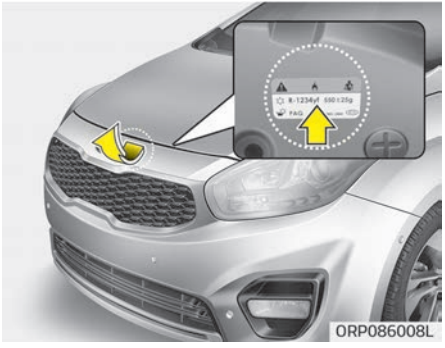

The refrigerant label is located on the underside of the hood.

DECLARATION OF CONFORMITY

■ Example

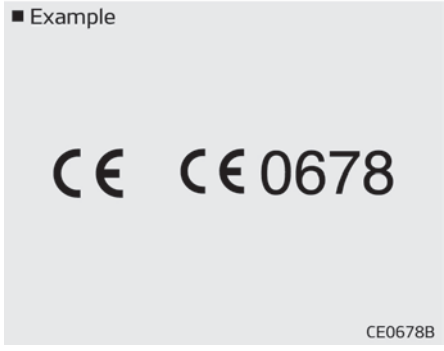

The radio frequency components of the vehicle comply with requirements and other relevant provisions of Directive 1995/5/EC.
Further information including the manufacturer's declaration of conformity is available on Kia web site as follows:
http://www.kia-hotline.com

Appendix

Шофиране през зимата..... 10-02
Сняг или поледица..... 10-02
Монтиране на вериги..... 10-03
Vetrarakstur..... 10-05
Akstur í snjó eða hálku..... 10-05
Uppsetning á keðjum..... 10-06

ШОФИРАНЕ ПРЕЗ ЗИМАТА

Тежките зимни атмосферни условия могат да предизвикат по-голямо износване и други проблеми. За да сведете до минимум проблемите, свързани с шофирането през зимата, следвайте препоръките по-долу:

Сняг или поледица

За да карате своето превозно средство при дълбока снежна покривка може да се наложи да използвате зимни гуми или да поставите вериги върху тях. Ако са необ ходими зимни гуми, трябва да изберете гуми със същия размер и вид като тези на оригиналните гуми.
В противен случай това може да се отрази неблагоприятно на безопасността и експлоатацията на Вашия автомобил. Освен това карането с висока скорост, бързото ускорение, внезапното натискане на спирачки и резките завои крият сериозни опасности.
При забавяне на скоростта, използвайте доколкото е възможно спирачките на дви гателя. Внезапното натискане на спирачки на заснежена или заледена настилка може да предизвика занасяне. Трябва да под държате достатъчна дистанция между автомобила, който се движи пред Вас, и Вашия автомобил.

Освен това натискайте спирачката леко. Следва да се отбележи че инсталирането на веригите върху гума та ще позволи прилагането на по-голяма движеща сила, но няма да предотврати занасянето встрани.

✻ СЪОБЩЕНИЕ

Веригите за гуми не са позволени във всички държави. Проверете норма тивната уредба в своята страна преди да поставите вериги за гуми.

Г уми за сняг

Ако поставите гуми за сняг на своя авто- мобил се уверете, че това са радиалнигуми със същия размер и товарен индекс като тези на оригиналните гуми. Поставете гуми за сняг на всичките четири колела, за да балансирате експлоатацията на своя автомобил във всякакви атмос- ферни условия. Имайте предвид, че тягата на гумите за сняг върху суха настилка не може да бъде толкова голяма колкото тази на оригиналните гуми. Следва да карате внимателно, дори когато пътищата са почистени.

Консултирайте се с доставчика на гуми за максималната препоръчителна скорост.

⚠ ПРЕДУПРЕЖДЕНИЕ

■ Размер на гумите за сняг

Г умите за сняг следва да са равно- стойни по размер и тип на тези на стандартните гуми на автомобила. В противен случай това може да се отрази неблагоприятно на безопас- ността и експлоатацията на Вашия автомобил.

Не монтирайте гуми с шипове, преди да сте проверили местните, национални и общински разпоредби за възможни огра- ничения в тяхната употреба.

Вериги за гуми



Тъй като страниците на радиалните гуми са по-тънки, те могат да се повредят, ако върху тях се монтират някои видове вери- ги за сняг. Ето защо се препоръчва изпол- зването на гуми за сняг, а не на вериги за сняг.
Не поставяйте вериги върху автомо- били, чиито колела са с алуминиеви джан- ти; веригите за сняг могат да повредят колелата.
Ако трябва да се използват вериги за сняг, използвайте телени вериги с дебелина от поне 15 мм.

Повредата на Вашия автомобил вследствие на непра- вилната употреба на вериги за сняг не е в обхвата на гаранцията на производителя на Вашия автомобил.
Вериги за гуми трябва да се инсталират само на предните гуми.

⚠ ВНИМАНИЕ

- **Уверете се, че размерът и видът на веригите са правилните за Ва- шите гуми. Неправилните вериги за сняг могат да повредят карасе- рията и окачването на автомоби- ла и този тип повреда може да не е в обхвата на производствената гаранция за Вашия автомобил. Също така куките за свързване на веригите за сняг могат да се по- вредят от намиращите се в кон- такт с тях автомобилни части, ка- то това може да доведе до раз- хлабването им. Уверете се, че ве- ригите за сняг са от клас S според класификацията на Дружеството на автомобилните инженери (SAE).**

(Продължено)

(Продължено)

- **Винаги проверявайте дали вери- ги- те са били поставени правил- но след като изминете около 0,5 до 1 км, за да се уверите в безо- пасното им поставяне. Затегнете веригите или ги поставете отново, ако са се разхлабили.**
- **Ако размерът на гумите на пре- возното ви средство е 225/45R18, не използвайте верига за гуми, тя може да повреди превозното ви средство (волан, окачване и ка- росерия).**

Монтиране на вериги

Когато инсталирате веригите, следвайте инструкциите на производителя и ги затегнете максимално. Карайте бавно с инсталирани вериги. Ако чуете, че веригите са навлезли в контакт с каросерията или шасито, спрете и ги затегнете. Ако те все още са в контакт, намалете скоростта до преустановяване на контакта.
Свалете веригите веднага, щом започнете да карате по почистените пътища.

⚠ ПРЕДУПРЕЖДЕНИЕ

■ Поставяне на вериги

Когато поставите вериги за сняг, паркирайте автомобила на равно място далеч от пътното движение. Включете аварийните светлини и поставете светлоотразителния триъгълник зад автомобила, ако разполагате с такъв.
Винаги паркирайте автомобила в паркинг, дръпнете ръчната спирачка и изключете двигате- ля преди да поставите веригите за сняг.

⚠ ПРЕДУПРЕЖДЕНИЕ

■ Вериги за гуми

- **Използването на вериги може да се отрази неблагоприятно на работата на Вашия автомобил.**
- **Не надвишавайте пределната скорост, препоръчана от производителя, или скоростта от 30 км/ч, което е пониско.**

(Продължено)

(Продължено)

- **Карайте внимателно и избягвайте неравности, дупки, резки завои и други опасности на пътя, които могат да накарат автомобила да подскача.**
- **Избягвайте резките завои или използването на спирачки, ако колелата са блокирани.**

⚠ ВНИМАНИЕ

- **Веригите с грешен размер или тези, които са неправилно инсталирани, могат да повредят спирачните накладки, окачването, каросерията и колелата.**
- **Спрете и затегнете веригите повторно винаги, щом ги чуете да удрят автомобила.**

VETRARAKSTUR

Akstur í þungri færð og vetrarveðri leiðir til aukins slits á ökutækinu og skapar ýmis vandamál. Hægt er að draga úr erfiðleikum sem fylgja vetrarakstri ef farið er að þessum ráðleggingum:

Akstur í snjó eða hálku

Við akstur í djúpum snjó kann að vera nauðsynlegt að nota vetrarhjólbarða eða setja keðjur á hjólbarðana. Reynist nauðsynlegt að nota vetrarhjólbarða þarf að velja hjólbarða af sömu stærð og gerð og venjulegu hjólbarðarnir. Sé það ekki gert getur það dregið úr öryggi og skert aksturseiginleika ökutækisins.
Hraðakstur, skyndileg hröðun, nauðhemlun og krappar beygjur geta enn fremur falið í sér mikla hættu.
Þegar dregið er úr hraða er ráðlegt að beita vélarhemlun sem kostur er.
Við nauðhemlun á snævi þöktum eða hálum vegum getur ökutækið hæglega runnið til. Nauðsynlegt er að halda hæfilegri fjarlægð á milli þíns ökutækis og ökutækisins fyrir framan. Alltaf ætti að beita hemlinum mjúklega. Hafa ber í huga að ef keðjur eru settar á hjólbarða fæst aukinn drifkraftur en það hindrar þó ekki að ökutækið renni til hliðanna.

✻ TILKYNNING

Notkun snjókeðja er ólögleg í sumum ríkjum. Kynnið ykkur gildandi landslög áður en keðjur eru settar upp.

Vetrarhjólbarðar

Ef vetrarhjólbarðar eru settir á ökutækið þarf að gæta þess að nota þverofna hjól- barða af sömu stærð og ásþunga og upprunalegu hjólbarðarnir. Setjið vetrarhjólbarða á öll fjögur hjólin til að tryggja örugga stýringu ökutækisins við öll veðurskilyrði. Hafið í huga að á auðum vegi kunna vetrarhjólbarðar að hafa minna grip en hjólbarðarnir sem fylgdu ökutækinu. Því þarf að aka af gætni, jafnvel á auðum vegum. Ráðfærið ykkur við söluaðila hjólbarðanna um ráðlagðan hámarkshraða.

⚠ VIÐVÖRUN

■ Stærðir vetrarhjólbarða (framhald)

(framhald)

**Vetrarhjólbarðar ættu að vera af sömu stærð og gerð og hjólbarðarnir sem fylgdu ökutækinu.
Misræmi á því getur dregið úr öryggi og skert aksturseiginleika ökutækisins.**

Áður en negldir hjólbarðar eru settir upp er rétt að kynna sér reglugerðir um notkun slíkra hjólbarða í viðkomandi landi, fylki eða sveitarfélagi.

Keðjur á hjólbarða



Hliðar þverofinna hjólbarða eru þynnri en á öðrum hjólbörðum og sumar gerðir snjókeðja geta því valdið skemmdum á þeim. Því er ráðlegt að nota vetrarhjólbarða fremur en keðjur, ef þess er kostur.
Setjið aldrei keðjur á hjólbarða ökutækja sem búin eru álfelgum þar sem keðjurnar geta valdið skemmdum á felgunum. Ef óhjákvæmilegt reynist að nota keðjur skal nota vírkeðjur sem eru innan við 15 mm á þykkt. Ábyrgðartrygging söluaðila ökutækisins tekur ekki til skemmda sem orsakast af rangri notkun snjókeðja. Snjókeðjur skal aðeins setja á framhjólbarðana.

⚠ VARÚÐ

- **Gætið þess að snjókeðjurnar séu af þeirri stærð og gerð sem hæfir hjólbörðunum. Notkun snjókeðja af rangri gerð getur valdið skemmdum á yfirbyggingu og fjöðrun ökutækisins og kann að falla utan ábyrgðartryggingar söluaðila ökutækisins. Þá geta festikrókar keðjanna skemmst vegan núnings við íhluti ökutækisins og snjókeðjurnar losnað af hjólbarðanum. Gætið þess að snjókeðjurnar séu með SAE vottun í S-flokki.**
- **Eftir um það bil 0,5-1 km akstur skal ævinlega skoða keðjurnar aftur til að tryggja að þær hafi verið settar upp á réttan og öruggan hátt. Herðið keðjurnar eða setjið þær aftur á ef þær hafa losnað.**
- **Ef ökutækið þitt er með hjólbarða af stærðinni 225/45R18 skaltu ekki nota keðjur; þær geta skemmt ökutækið þitt (felgur, fjöðrun og yfirbyggingu).**

Uppsetning á keðjum

Þegar keðjur eru settar á skal fylgja leiðbeiningum framleiðanda og herða keðjurnar eins mikið og unnt er.

Þegar keðjur hafa verið settar á skal aka hægt. Ef hljóð heyrist sem bendir til að keðjurnar séu í snertingu við yfirbyggingu eða undirvagn er rétt að nema staðar og herða keðjurnar. Ef snerting virðist enn eiga sér stað skal hægja aksturinn þar til hljóðið þagnar.
Takið keðjurnar niður um leið og komið er á rudda og snjólausa vegi.

⚠ VIÐVÖRUN

■ Uppsetning á keðjum

Þegar snjókeðjur eru settar upp skal leggja ökutækinu á sléttum fleti fjarri umferð. Kveikið á viðvörunarljósum ökutækisins og setjið þríhyrningslaga viðvörunarskilti upp fyrir aftan ökutækið, ef það er tiltækt. Hafið ökutækið ævinlega í stöðuhemli og drepið á vélinni áður en snjókeðjur eru settar upp.

⚠ VIÐVÖRUN

■ Keðjur á hjólbarða (framhald)

(framhald)

- **Notkun keðja getur skert aksturseiginleika ökutækisins.**
- **Akið ekki hraðar en 30 km/klst. eða samkvæmt ráðlögðum hámarkshraða framleiðanda keðjanna, hvort sem reynist lægra.**
- **Akið gætilega og sneiðið hjá þústum, holum, kröppum beygjum og öðrum hættum á veginum, sem gætu valdið hristingi ökutækisins.**
- **Forðist krappar beygjur eða læsta hemlun.**

⚠ VARÚÐ

- **Séu snjókeðjur af rangri stærð eða rangt upp settar geta þær valdið skemmdum á hemlalögn, fjöðrun, yfirbyggingu og hjólum ökutækisins.**
- **Hvenær sem hljóð bendir til þess að keðjurnar sláist við ökutækið skal stöðva akstur og herða keðjurnar.**

A

Active ECO operation....6-39
Air bag warning label....3-73
Air bag warning light....3-54
Air bags....3-50
- Air bag warning label....3-73
- Air bag warning light....3-54
- Curtain air bag....3-65
- Driver's and passenger's front air bag....3-58
- Inflation conditions....3-68
- Inflation conditions (Air bags)....3-68
- Non-inflation conditions....3-69
- Operation....3-51
- Passenger's front air bag ON/OFF switch....3-60
- Side air bag....3-63
- SRS care....3-71
- SRS components and functions....3-55

Air cleaner....8-46
Air conditioner compressor label....9-19
Air conditioning system....4-124
- Manual climate control system....4-124

Air ventilation seat....4-151
Anti-lock brake system (ABS)....6-47
Appearance care....8-106
- Exterior care....8-106
- Interior care....8-110

Armed stage....4-13
Ashtray....4-147
Auto light....4-103
Automatic climate control system
- Automatic heating and air conditioning....4-131
- Climate control air filter....4-122,8-47

Automatic transaxle operation....6-24
Aux, USB and iPod port....4-155

B

Base curb weight....6-97
Battery....8-52
Battery replacement....4-08,4-160
Battery saver function....4-101
Blind Spot Detection system (BSD)....6-71
Bonnet: see "Hood"....4-30
Bottle holder....4-149
Brake fluid....8-42
Bulb replacement....8-89
Bulb wattage....9-07

C

Camera (Rear view)....4-100
Capacities (Lubricants)....9-11
Care of seat belts....3-33
Care
Care of seat belts....3-33
Exterior care....8-106
Interior care....8-110
SRS care....3-71
Tire care....8-56
Cargo security screen....4-157
Cargo weight....6-97
Center console storage....4-144
Checking tire inflation pressure....8-57
Child restraint system
Seat belt....3-37
Cigarette lighter....4-147
Climate control air filter....4-122,8-47
Climate control system
Automatic heating and air conditioning....4-131
Closing the sunroof....4-37
Clothes hanger....4-155
Combined cluster: see "Instrument cluster"....4-47
Compact spare tire replacement....8-60
Coolant....8-39
Cooling fluid: see "Engine coolant"....8-39
Crankcase emission control system....8-112
Cruise control switch....6-57
Cruise control system....6-56
Cup holder....4-148
Curtain air bag....3-65

D

Dashboard illumination: see "Instrument panel illumination"....4-48
Dashboard: see "Instrument cluster"....4-47
Day/night rearview mirror....4-43
Declaration of conformity....9-21
Dimensions....9-02
Disarmed stage....4-14
Display illumination: see "Instrument panel illumination"....4-48
Displays: see "Instrument cluster"....4-47
Door lock/unlock in an emergency situation....4-12
Door locks....4-16
From inside the vehicle....4-17

From outside the vehicle....4-16
Drinks holder: see "Cup holder"....4-148
Driver's and passenger's front air bag....3-58
Driver's seat belt warning....3-22
Dual Clutch Transmission (DCT)....6-31

E

Electric power steering....4-39
Electrochromic mirror (ECM)....4-43
Electronic parking brake (EPB)....6-43
Electronic stability control (ESC)....6-49
Emergency commodity....7-35
Emergency starting....7-05
Emergency Stop Signal (ESS)....6-54
Emergency tailgate safety release....4-23
Emission control system....8-112
Crankcase emission control system....8-112
Evaporative emission control system....8-112
Exhaust emission control system....8-113
Engine compartment....2-06,8-03
Engine coolant....8-39
Engine coolant temperature gauge....4-51
Engine number....9-18
Engine oil....8-35
Engine specification....9-03
Engine Start/Stop button....6-10
Engine Start/Stop button position....6-10
Evaporative emission control system....8-112
Exhaust emission control system....8-113
Explanation of scheduled maintenance items....8-32
Exterior care....8-106
Exterior features....4-161
Exterior overview (Front)....2-02
Exterior overview (Rear)....2-03

F

Floor mat anchor(s)....4-156
Fluid
Brake fluid....8-42
Washer fluid....8-43
Fog light (front)....4-105,8-93
Fog light (rear)....4-106
Folding the outside rearview mirror....4-45
Front seat adjustment (manual)....3-05
Front seat adjustment (power)....3-07
Fuel filler lid....4-32

Fuel filter (for diesel)....8-45
Fuel gauge....4-52
Fuel requirements....1-03
Fuse switch....8-68
Fuses....8-66
Fuse switch....8-68
Fuse/relay panel description....8-70
Instrument panel fuse....8-67
Main fuse....8-69
Multi fuse....8-70

G

Gauges....4-49
GAW (Gross axle weight)....6-97
GAWR (Gross axle weight rating)....6-97
Glove box....4-144
Gross vehicle weight....9-04
GVW (Gross vehicle weight)....6-97
GVWR (Gross vehicle weight rating)....6-97

H

Hazard warning flasher....7-02
Headlight bulb replacement....8-89
Headlight position....4-103
Headrest (front)....3-09,3-18
Heated steering wheel....4-41
Heater
Automatic climate control system....4-131
Hill-start Assist Control (HAC)....6-53
Hood....4-30
Horn....4-41,4-42
How to use this manual....1-02

I

If the engine does not start....7-04
If the engine overheats....7-08
If you have a flat tire (with spare tire)....7-14
If you have a flat tire (with Tire Mobility Kit)....7-23
Ignition switch position....6-06
Illuminated ignition switch....6-06
Immobilizer system....4-04
In case of an emergency while driving....7-03
Indicator lights....4-76
Inside light....8-102
Inside rearview mirror....4-43
Instrument cluster....4-47

Gauges....4-49
Indicator lights....4-76
Instrument cluster control....4-47
LCD display....4-56
LCD display control....4-48
LCD Modes....4-56
Service mode....4-57
Transaxle shift indicator....4-53
Trip computer....4-64
Trip modes....4-64
Turn by turn mode....4-60
User settings mode....4-58
Warning lights....4-69
Instrument panel fuse....8-67
Instrument panel illumination....4-48
Instrument panel overview....2-05
Interior care....8-110
Interior features....4-147
Air ventilation seat....4-151
Ashtray....4-147
Bottle holder....4-149
Cargo security screen....4-157
Cigarette lighter....4-147
Clothes hanger....4-155
Cup holder....4-148
Floor mat anchor(s)....4-156
Power outlet....4-154
Seat warmer....4-150
Side curtain....4-160
Sunvisor....4-152
Interior light....4-114
Map lamp....4-114
Room lamp....4-115
Interior overview....2-04
ISG (Idle Stop and Go) system....6-16

K

Key operations....4-04
Key positions....6-06
Keys....4-04
Immobilizer system....4-04
Key operations....4-04
Record your key number....4-04

L

Label
Air bag warning label....3-73
Air conditioner compressor label....9-19
Refrigerant label....9-20
Tire sidewall labeling....8-61
Tire specification and pressure label....9-17
Vehicle certification label....9-16

Lane Departure Warning System (LDWS)..... 6-67
Lap belt..... 3-25
Lap/shoulder belt..... 3-24
LCD display..... 4-56
Indicator lights..... 4-76
LCD Modes..... 4-56
Service mode..... 4-57
Trip computer..... 4-64
Trip modes..... 4-64
Turn by turn mode..... 4-60
User settings mode..... 4-58
Warning lights..... 4-69
LCD display control..... 4-48
LCD Modes..... 4-56
Light bulbs..... 8-89
Lighting
Battery saver function..... 4-101
Front fog light..... 4-105,8-93
Headlight position..... 4-103
Inside light..... 8-102
Outside light..... 8-101
Parking light position..... 4-102
Rear fog light..... 4-106
Turn signals..... 4-105
Lubricants and capacities..... 9-11
Luggage volume..... 9-06

M

Main fuse..... 8-69
Maintenance schedule..... 8-11
Maintenance services..... 8-06
Maintenance
Explanation of scheduled maintenance items..... 8-32
Maintenance services..... 8-06
Owner maintenance..... 8-09
Scheduled maintenance service..... 8-11
Tire maintenance..... 8-61
Manual climate control system..... 4-124
Manual transaxle operation..... 6-20
Map lamp..... 4-114
Mirrors
Day/night rearview mirror..... 4-43
Electrochromic mirror (ECM)..... 4-43
Folding the outside rearview mirror..... 4-45
Inside rearview mirror..... 4-43
Outside rearview mirror..... 4-44
Multi fuse..... 8-70

N

Non-inflation conditions (Air bags)..... 3-69

O

Odometer 4-52
Oil (engine) 8-35
Outside light 8-101
Outside rearview mirror 4-44
Outside temperature gauge 4-53
Owner maintenance 8-09

P

Panorama sunroof 4-35
Sliding the sunroof 4-36
Tilting the sunroof 4-36
Parking assist system 4-84
Types of warning indicator and sound 4-81,4-86
Parking brake 8-34
Parking brake - Hand type 6-41
Parking light position 4-102
Passenger's front air bag ON/OFF switch 3-60
Portable lamp
Battery replacement 4-160
Power brakes 6-40
Power outlet 4-154
Power window lock button 4-28
Pre-tensioner seat belt 3-28
Precautions (seat belt) 3-31

R

RCTA (Rear Cross Traffic Alert) 6-74
Rear parking assist system 4-80
Rear seat adjustment 3-12
Rear window defroster 4-118
Rearview camera 4-100
Recommended cold tire inflation pressures 8-56
Recommended lubricants and capacities 9-11
Recommended SAE viscosity number 9-13
Record your key number 4-04
Refrigerant label 9-20
Remote keyless entry system 4-06
Battery replacement 4-08
Remote keyless entry system operations 4-06
Transmitter precautions 4-07
Remote keyless entry system operations 4-06
Replacement light bulb 8-89
Resetting the sunroof 4-38
Room lamp 4-115

Rotation (Tire)..... 8-58

S

Scheduled maintenance service..... 8-11
Seat belt restraint system..... 3-21
Seat belt warning..... 3-22
Seat belts..... 3-21
- Care of seat belts..... 3-33
- Driver's seat belt warning..... 3-22
- Lap belt..... 3-25
- Lap/shoulder belt..... 3-24
- Pre-tensioner seat belt..... 3-28
- Precautions..... 3-31
- Seat belt restraint system..... 3-21
- Seat belt warning..... 3-22

Seat warmer..... 4-150
Seatback pocket (front)..... 3-12
Seats..... 3-02
- Front seat adjustment (manual)..... 3-05
- Front seat adjustment (power)..... 3-07
- Headrest (front)..... 3-09,3-18
- Rear seat adjustment..... 3-12
- Seatback pocket (front)..... 3-12

Service mode..... 4-57
Side air bag..... 3-63
Side curtain..... 4-160
Sliding the sunroof..... 4-36
Smart key function..... 4-10
Smart key
- Door lock/unlock in an emergency situation..... 4-12
- Smart key function..... 4-10

Smart parking assist system..... 4-90
- How the system works (parking mode)..... 4-94
- System malfunction..... 4-99

Spare tire
- Compact spare tire replacement..... 8-60

Speed limit control switch..... 6-60
Speed limit control system..... 6-60
Speed Limit Information Function (SLIF)..... 6-63
Speedometer..... 4-50
SRS care..... 3-71
SRS components and functions..... 3-55
Steering wheel..... 4-39
- Electric power steering..... 4-39
- Heated steering wheel..... 4-41
- Horn..... 4-41,4-42
- Tilt and telescopic steering..... 4-40

Storage compartment..... 4-144
- Center console storage..... 4-144
- Glove box..... 4-144

Sunroof
Closing the sunroof..... 4-37
Resetting the sunroof..... 4-38
Sunshade..... 4-36
Sunshade..... 4-36
Sunvisor..... 4-152

T

Tachometer..... 4-50
Tailgate
Emergency tailgate safety release..... 4-23
Non-power tailgate opening..... 4-22
Theft-alarm stage..... 4-14
Theft-alarm system..... 4-13
Armed stage..... 4-13
Disarmed stage..... 4-14
Theft-alarm stage..... 4-14
Tilt and telescopic steering..... 4-40
Tilting the sunroof..... 4-36
Tire care..... 8-56
Tire Pressure Monitoring System (TPMS)..... 7-09
Tire rotation..... 8-58
Tire specification and pressure label..... 9-17
Tires and wheels..... 8-56,9-09
Checking tire inflation pressure..... 8-57
Compact spare tire replacement..... 8-60
Low aspect ratio tire..... 8-64
Recommended cold tire inflation pressures..... 8-56
Tire care..... 8-56
Tire maintenance..... 8-61
Tire replacement..... 8-59
Tire rotation..... 8-58
Tire sidewall labeling..... 8-61
Tire traction..... 8-61
Wheel alignment and tire balance..... 8-59
Wheel replacement..... 8-61
Towing..... 7-30
Transaxle shift indicator..... 4-53
Transmitter precautions..... 4-07
Trip computer..... 4-64
Trip modes..... 4-64
Turn by turn mode..... 4-60
Turn signals..... 4-105

U

User settings mode..... 4-58
Using the iPod device 5-10
Using the USB device 5-08

V

Vehicle break-in process....1-06
Vehicle certification label....9-16
Vehicle curb weight....6-97
Vehicle identification number (VIN)....9-15
Vehicle Stability Management (VSM)....6-52

W

Warning lights....4-69
Washer fluid....8-43
Welcome system....4-117
Wheel alignment and tire balance....8-59
Wheel replacement....8-61
Windows....4-24
  Power window lock button....4-28
Windshield washers....4-110
Wiper blades....8-48
Wipers and washers....4-108
  Windshield washers....4-110