FOREWORD

Dear Customer,

Thank you for selecting your new Kia vehicle.

As a global car manufacturer focused on building high-quality vehicles with exceptional value, Kia is dedicated to providing you with a customer service experience that exceeds your expectations.

An authorized Kia dealership where factory-trained technicians, recommended special tools, and genuine Kia replacement parts are provided can help if you need technical assistance.

This Owner's Manual will acquaint you with the operation of features and equipment that are either standard or optional on this vehicle, along with the maintenance needs of this vehicle. Therefore, you may find some descriptions and illustrations not applicable to your vehicle. You are advised to read this publication carefully and follow the instructions and recommendations. Please always keep this manual in the vehicle for your, and any subsequent owner's, reference.

All information contained in this Owner's Manual was accurate at the time of publication. However, as Kia continues to make improvements to its products, the company reserves the right to make changes to this manual or any of its vehicles at any time without notice and without incurring any obligations.

Please drive safely, and enjoy your Kia vehicle!

© 2021 Kia Corporation

All rights reserved. May not be reproduced or translated in whole or in part without the written consent of Kia Corporation

Printed in Korea

How to use this manual

We want to help you get the greatest possible driving pleasure from your vehicle. Your Owner's Manual can assist you in many ways.

We strongly recommend that you read the entire manual. In order to minimize the chance of death or injury, you must read the WARNING and CAUTION sections in the manual.

Illustrations complement the words in this manual to best explain how to enjoy your vehicle. By reading your manual, you learn about features, important safety information, and driving tips under various road conditions.

The general layout of the manual is provided in the Table of Contents. Use the index when looking for a specific area or subject, it has an alphabetical listing of all information in your manual.

Chapters: This manual has nine chapters plus an index. Each chapter begins with a brief list of contents so you can tell at a glance if that chapter has the information you want.

You will find various WARNINGs, CAUTIONs, and NOTICEs in this manual. These WARNINGs were prepared to enhance your personal safety. You should carefully read and follow ALL procedures and recommendations provided in these WARNINGs, CAUTIONs and NOTICEs.

⚠ WARNING

A WARNING indicates a situation in which harm, serious bodily injury or death could result if the warning is ignored.

⚠ CAUTION

A CAUTION indicates a situation in which damage to your vehicle could result if the caution is ignored.

✻ NOTICE

A NOTICE indicates interesting or helpful information is being provided.

Table of Contents

Introduction 1

Your vehicle at a glance 2

Safety features of your vehicle 3

Features of your vehicle 4

Driving your vehicle 5

What to do in an emergency 6

Maintenance 7

Specifications & Consumer information 8

Appendix 9

Abbreviation A

Index I

Introduction 1

Fuel requirements **1-2**
• Gasoline engine 1-2
Vehicle Modifications **1-5**
Vehicle break-In process **1-5**
Risk of burns when parking or stopping vehicle **1-6**
Vehicle handling instructions **1-6**

Introduction

Fuel requirements

Gasoline engine

Unleaded

For Europe

For the optimal vehicle performance, we recommend you to use unleaded gasoline with an octane rating of RON (Research Octane Number) 95 / AKI (Anti Knock Index) 91 or higher.

You may use unleaded gasoline with an octane rating of RON 91~94 / AKI 87~90 but it may result in slight performance reduction of the vehicle. (Do not use methanol blended fuels.)

Except Europe

Your new Kia vehicle is designed to use only unleaded fuel having an Octane Rating of RON (Research Octane Number) 91 / AKI (AntiKnock Index) 87 or higher. (Do not use methanol blended fuels.)

Your new vehicle is designed to obtain maximum performance with UNLEADED FUEL, as well as minimize exhaust emissions and spark plug fouling.

⚠ CAUTION

NEVER USE LEADED FUEL.The use of leaded fuel is detrimental to the catalytic converter and will damage the engine control system's oxygen sensor and affect emission control.

Never add any fuel system cleaning agents to the fuel tank other than what has been specified. (Kia recommends to consult an authorized Kia dealer/service partner for details.)

⚠ WARNING

- Do not "top off" after the nozzle automatically shuts off when refueling.
- Always check that the fuel cap is installed securely to prevent fuel spillage in the event of an accident.

Leaded (if equipped)

For some countries, your vehicle is designed to use leaded gasoline. When you are going to use leaded gasoline, Kia recommends to visit an authorized Kia dealer/service partner and ask whether leaded gasoline in your vehicle is available or not.

Octane Rating of leaded gasoline is same with unleaded one.

Gasoline containing alcohol and methanol

Gasohol, a mixture of gasoline and ethanol (also known as grain alcohol), and gasoline or gasohol containing methanol (also known as wood alcohol) are being marketed along with or instead of leaded or unleaded gasoline.

Do not use gasohol containing more than 10% ethanol, and do not use gasoline or gasohol containing any methanol. Either of these fuels may cause drivability problems and damage to the fuel system, engine control system and emission control system.

Discontinue using gasohol of any kind if drivability problems occur.

Vehicle damage or drivability problems may not be covered by the manufacturer's warranty if they result from the use of:

1. Gasohol containing more than 10% ethanol.
2. Gasoline or gasohol containing methanol.
3. Leaded fuel or leaded gasohol.

⚠ CAUTION

Never use gasohol which contains methanol. Discontinue use of any gasohol product which impairs drivability.

Other fuels

Using fuels such as

- Silicone (Si) contained fuel,
- MMT (Manganese, Mn) contained fuel,
- Ferrocene (Fe) contained fuel, and
- Other metalic additives contained fuels,

may cause vehicle and engine damage or cause plugging, misfiring, poor acceleration, engine stalling, catalyst melting, abnormal corrosion, life cycle reduction, etc.

Also, the Malfunction Indicator Lamp (MIL) may illuminate.

✻ NOTICE

Damage to the fuel system or performance problem caused by the use of these fuels may not be covered by your New Vehicle Limited Warranty.

Use of MTBE

Kia recommends avoiding fuels containing MTBE (Methyl Tertiary Butyl Ether) over 15.0% vol. (Oxygen Content 2.7% weight) in your vehicle.

Fuel containing MTBE over 15.0% vol. (Oxygen Content 2.7% weight) may reduce vehicle performance and produce vapor lock or hard starting.

⚠ CAUTION

Your New Vehicle Limited Warranty may not cover damage to the fuel system and any performance problems that are caused by the use of fuels containing methanol or fuels containing MTBE (Methyl Tertiary Butyl Ether) over 15.0% vol. (Oxygen Content 2.7% weight.)

Do not use methanol

Fuels containing methanol (wood alcohol) should not be used in your vehicle. This type of fuel can reduce vehicle performance and damage components of the fuel system, engine control system and emission control system.

Fuel Additives

Kia recommends that you use unleaded gasoline which has an octane rating of RON (Research Octane Number) 95 / AKI (Anti Knock Index) 91 or higher (for Europe) or Octane Rating of RON (Reasearch Octane Number) 91 / AKI (Anti-Knock Index) 87 or higher (except Europe).

For customers who do not use good quality gasolines including fuel additives regularly, and have problems starting or the engine does not run smoothly, one bottle of additives added to the fuel tank at every 15,000 km (10,000 miles) (For Europe) / 10,000 km (6,500 miles) (Except Europe). Additives are available from a professional workshop along with information on how to use them. Kia recommends to visit an authorized Kia dealer/service partner. Do not mix other additives.

Operation in foreign countries

If you are going to drive your vehicle in another country, be sure to:

- Observe all regulations regarding registration and insurance.
- Determine that acceptable fuel is available.

Vehicle Modifications

This vehicle should not be modified. Modification of your vehicle could affect its performance, safety or durability and may even violate governmental safety and emissions regulations.

In addition, damage or performance problems resulting from any modification may not be covered under warranty.

- If you use unauthorized electronic devices, it may cause the vehicle to operate abnormally, wire damage, battery discharge and fire. For your safety, do not use unauthorized electronic devices.

Vehicle break-In process

By following a few simple precautions for the first 1,000 km (600 miles) you may add to the performance, economy and life of your vehicle.

- Do not race the engine.
- While driving, keep your engine speed (rpm, or revolutions per minute) within 3,000 rpm.
- Do not maintain a single speed for long periods of time, either fast or slow.Varying engine speed is needed to properly break-in the engine.
- Avoid hard stops, except in emergencies, to allow the brakes to seat properly.
- Don't tow a trailer during the first 2,000 km (1,200 miles) of operation.
- Fuel economy and engine performance may vary depending on vehicle break-in process and be stabilized after 6,000 km (4,000 miles). New engines may consume more oil during the vehicle break-in period.

Risk of burns when parking or stopping vehicle

- Do not park or stop the vehicle near flammable items such as leaves, paper, oil, and tire. Such items placed near the exhaust system can become a fire hazard.
- When an engine idles at a high speed with the rear side of the vehicle touching the wall, heat of the exhaust gas can cause discoloration or fire. Keep enough space between the rear part of the vehicle and the wall.
- Be sure not to touch the exhaust/catalytic systems while engine is running or right after the engine is turned off. There is a risk of burns since the systems are extremely hot.

Vehicle handling instructions

As with other vehicles of this type, failure to operate this vehicle correctly may result in loss of control, an accident or vehicle rollover.

Specific design characteristics (higher ground clearance, track, etc.) give this vehicle a higher center of gravity than other types of vehicles. In other words they are not designed for cornering at the same speeds as conventional 2-wheel drive vehicles. Avoid sharp turns or abrupt maneuvers. Again, failure to operate this vehicle correctly may result in loss of control, an accident or vehicle rollover. Be sure to read the "Reducing the risk of a rollover" on page 5-171 of this manual.

Your vehicle at a glance 2

Exterior overview 2-2
Interior overview 2-5
Instrument panel overview 2-7
Engine compartment 2-9

Your vehicle at a glance

Exterior overview

Front view



OST010001L

* The actual shape may differ from the illustration.

1. Hood 4-33
2. Head lamp (Features of your vehicle) 4-104
   Head lamp (Maintenance) 7-85
3. Front fog lamp (Features of your vehicle) 4-110
   Front fog lamp (Maintenance) 7-85
4. Daytime running lamp (Features of your vehicle) 4-104
   Daytime running lamp (Maintenance) 7-85
5. Wheel and tire 8-5
6. Outside rear view mirror 4-45
7. Sunroof 4-38

8. Front windshield wiper blades (Features of your vehicle) 4-112
Front windshield wiper blades (Maintenance) 7-46
9. Windows 4-28
10. Front ultrasonic sensors 4-98

Rear view



OYB017002

* The actual shape may differ from the illustration.

1. Door locks	4-19
2. Fuel filler door	4-35
3. Rear combination lamp (Maintenance)	7-88
4. High mounted stop lamp (Maintenance)	7-88
5. Tailgate	4-25
6. Antenna	4-160
7. Rear view camera	4-94
8. Rear ultrasonic sensors	4-95, 4-98
9. Rear fog lamp (Features of your vehicle)	4-110
Rear fog lamp (Maintenance)	7-88
10. Rear window wiper blade (Features of your vehicle)	4-112
Rear window wiper blade (Maintenance)	7-46

Interior overview

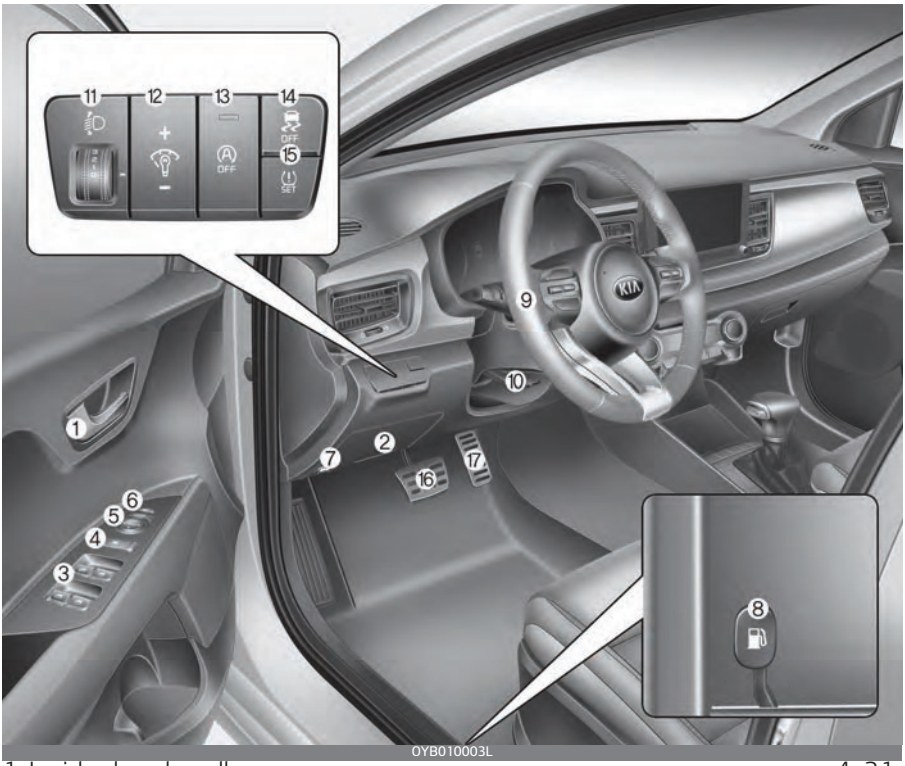

OYB010003L

1. Inside door handle	4-21
2. Inner fuse panel	7-66
3. Power window switches	4-28
4. Power window lock button	4-31
5. Outside rear view mirror control switch	4-48
6. Outside rear view mirror folding switch	4-48
7. Hood release lever	4-33
8. Fuel filler door release lever	4-35
9. Steering wheel	4-42
10.Steering wheel tilt lever	4-43
11.Headlight leveling device	4-111
12.Instrument panel illumination control switch	4-51
13.Idle Stop and Go system OFF button	5-18
14.ESC OFF button	5-57
15.TPMS SET switch	6-10

16.Brake pedal 5-51
17.Accelerator pedal

Instrument panel overview



1. Instrument cluster 4-50
2. Horn 4-44
3. Driver's front air bag 3-48
4. Light control 4-105
5. Wiper/Washer 4-112
6. Ignition switch 5-9
   ENGINE START/STOP button 5-12
7. Hazard warning flasher switch 6-3
8. Infotainment System
   Refer to "Car Infotainment System Quick Reference Guide".
9. Central door lock switch 4-22
10. Manual climate control system 4-143
    Automatic climate control system 4-145
11. USB port 4-161

12.Manual transmission 5-25
Intelligent manual transmission 5-29
Automatic transmission 5-34
Dual clutch transmission 5-42
13.Parking brake lever 5-53
14.Passenger's front air bag 3-48
15.Power outlet 4-154
16.Glove box 4-147
17.Steering wheel audio control
Refer to "Car Infotainment System Quick Reference Guide".
18.Cigarette lighter 4-150
19.Seat warmer 4-152
20.Heated steering wheel switch 4-44
21.Parking Safety button 4-99
22.DRIVE MODE button 5-64
23.USB charger 4-155

Engine compartment

Smartstream G1.0 T-GDi/Smartstream G1.0 T-GDi 48V HEV

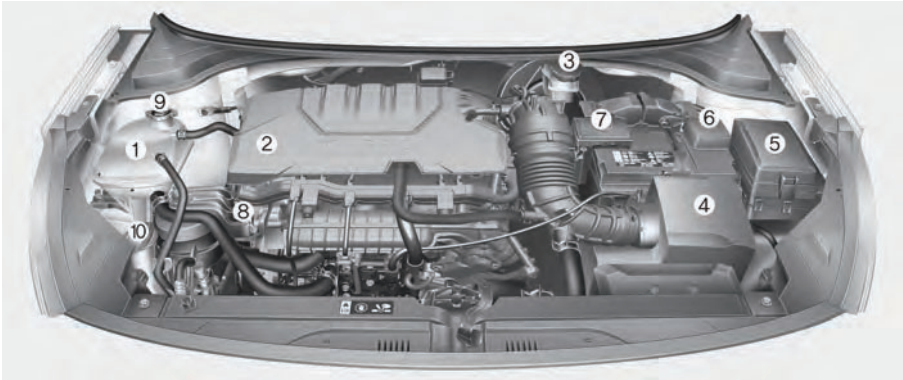

OST070178L

* The actual engine room in the vehicle may differ from the illustration.

1. Engine coolant reservoir 7-36
2. Engine oil filler cap 7-32
3. Brake / clutch fluid reservoir 7-39
4. Air cleaner 7-43
5. Fuse box 7-69
6. Negative battery terminal 7-49
7. Positive battery terminal 7-49
8. Engine oil dipstick 7-32
9. Radiator cap 7-36
10. Windshield washer fluid reservoir 7-42

Smartstream G1.2

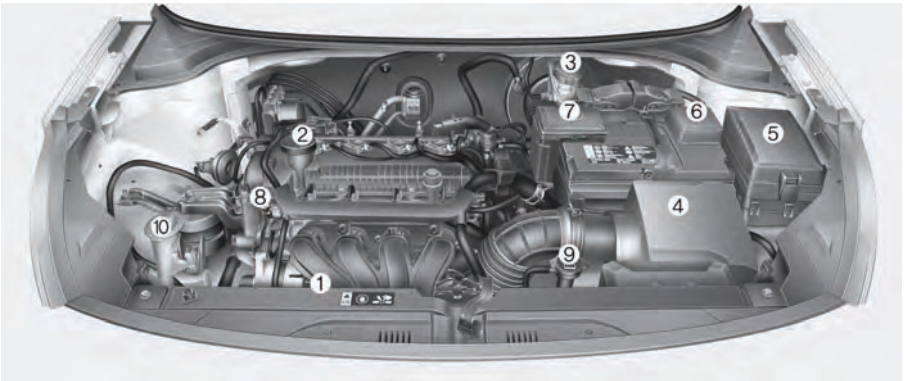

OYB070002L

(Gasoline engine) 1.4 MPI

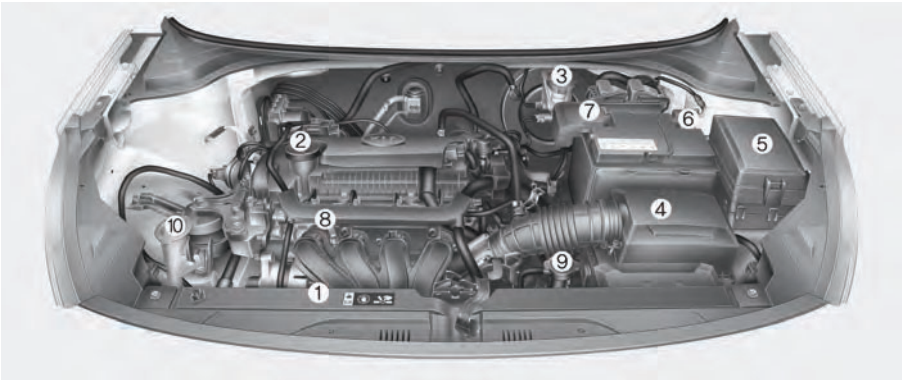

OYB070163L

* The actual engine room in the vehicle may differ from the illustration.

1. Engine coolant reservoir 7-36
2. Engine oil filler cap 7-32
3. Brake / clutch fluid reservoir 7-39
4. Air cleaner 7-43
5. Fuse box 7-69
6. Negative battery terminal 7-49
7. Positive battery terminal 7-49
8. Engine oil dipstick 7-32
9. Radiator cap 7-36
10. Windshield washer fluid reservoir 7-42

Safety features of your vehicle 3

Seats 3-3

- Feature of Seat Leather 3-6
- Front seat adjustment 3-6
- Headrest 3-7
- Seatback pocket 3-10
- Rear seat adjustment 3-10

Seat belts 3-15

- Seat belt restraint system 3-15
- Pre-tensioner seat belt 3-21
- Seat belt precautions 3-24
- Care of seat belts 3-27

Child Restraint System (CRS) 3-28

- Our recommendation: Children always in the rear 3-28
- Selecting a Child Restraint System (CRS) 3-29
- Installing a Child Restraint System (CRS) 3-30
- ISOFIX anchorage and top-tether anchorage (ISOFIX anchorage system) for children 3-31

Air bag - supplemental restraint system 3-41

- How does the air bag system operate 3-42
- Air bag warning light 3-44
- SRS components and functions 3-46
- Driver's and passenger's front air bag 3-48
- Side air bag 3-54
- Curtain air bag 3-55
- Why didn't my air bag go off in a collision? (Inflation and non-inflation conditions of the air bag) 3-56
- SRS Care 3-61
- Additional safety precautions 3-62

3 Safety features of your vehicle

- Adding equipment to or modifying your air bag-equipped vehicle 3-63
- Air bag warning label 3-63

Safety features of your vehicle

Seats

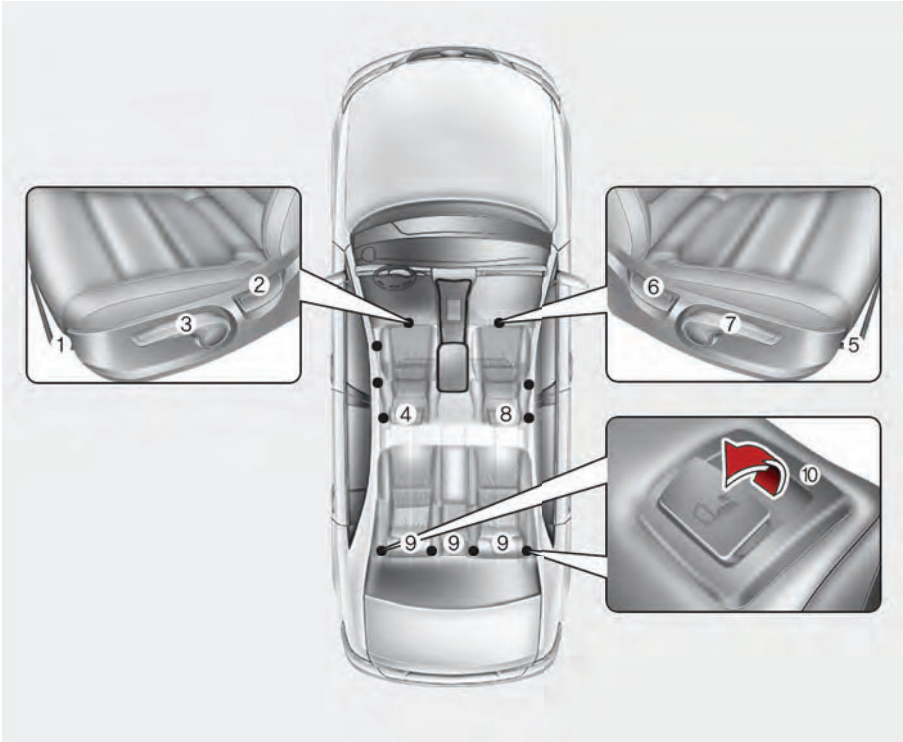

OST030001L

* The actual seats in the vehicle may differ from the illustration.

Driver's seat

1. Forward and backward
2. Seatback angle
3. Seat cushion height*
4. Headrest

Front passenger's seat

5. Forward and backward
6. Seatback angle
7. Seat cushion height*
8. Headrest

Rear seat

9. Headrest
10. Seatback folding

* : if equipped

⚠ WARNING

Loose objects

Loose objects in the driver's foot area could interfere with the operation of the foot pedals, possibly causing an accident. Do not place anything under the front seats.

⚠ WARNING

Uprighting seat

When you return the seatback to its upright position, hold the seatback and return it slowly and be sure there are no other occupants around the seat. If the seatback is returned without being held and controlled, the back of the seat could spring forward resulting in accidental injury to a person struck by the seatback.

⚠ WARNING

Driver responsibility for passengers

Riding in a vehicle with the seatback reclined could lead to serious or fatal injury in an accident. If a seat is reclined during an accident, the occupant's hips may slide under the lap portion of the seat belt, applying great force to the unprotected abdomen. Serious or fatal internal injuries could result. The driver must advise the passenger to keep the seatback in an upright position whenever the vehicle is in motion.

⚠ WARNING

Do not use a sitting cushion that reduces friction between the seat and passenger. The passenger's hips may slide under the lap portion of the seat belt during an accident or a sudden stop. Serious or fatal internal injuries could result because the seat belt can't operate normally.

⚠ WARNING

Driver's seat

- Never attempt to adjust the seat while the vehicle is moving. This could result in loss of control, and an accident causing death, serious injury, or property damage.
- Do not allow anything to interfere with the normal position of the seatback. Storing items against a seatback or in any other way interfering with proper locking of a seatback could result in serious or fatal injury in a sudden stop or collision.
- Always drive and ride with your seatback upright and the lap portion of the seat belt snug and low across the hips. This is the best position to protect you in case of an accident.

- In order to avoid unnecessary and perhaps severe air bag injuries, always sit as far back as possible from the steering wheel while maintaining comfortable control of the vehicle. We recommend that your chest be at least 250 mm (10 inches) away from the steering wheel.

⚠ WARNING

Rear seatbacks

- The rear seatback must be securely latched. If not, passengers and objects could be thrown forward resulting in serious injury or death in the event of a sudden stop or collision.
- Luggage and other cargo should be laid flat in the cargo area. If objects are large, heavy, or must be piled, they must be secured. Under no circumstances should cargo be piled higher than the seatbacks. Failure to follow these warnings could result in serious injury or death in the event of a sudden stop, collision or rollover.
- No passenger should ride in the cargo area or sit or lie on folded seatbacks while the vehicle is moving. All passengers must be properly seated in seats and restrained properly while riding.
- When resetting the seatback to the upright position, make sure it is securely latched by pushing it forward and backwards.
- To avoid the possibility of burns, do not remove the carpet in the cargo area. Emission control devices beneath this floor generate high temperatures.

⚠ WARNING

After adjusting the seat, always check that it is securely locked into place by attempting to move the seat forward or backward without using the lock release lever. Sudden or unexpected movement of the driver's seat could cause you to lose control of the vehicle resulting in an accident.

⚠ WARNING

- Use extreme caution so that hands or other objects are not caught in the seat mechanisms while the seat is moving.
- Do not put a cigarette lighter on the floor or seat. When you operate the seat, gas may gush out of the lighter and cause fire.
- If there are occupants in the rear seats, be careful while adjusting the front seat position.
- Use extreme caution when picking small objects trapped under the seats or between the seat and the center console. Your hands

might be cut or injured by the sharp edges of the seat mechanism.

Feature of Seat Leather

- Leather is made from the outer skin of an animal, which goes through a special process to be available for use. Since it is a natural substance, each part differs in thickness or density.
  Wrinkles may appear as a natural result of stretching and shrinking depending on the temperature and humidity.
- The seat cover is made of stretchable material to improve comfort of passengers.
- The parts contacting the body are curved and the side supporting area is high which provides driving comfort and stability.
- Wrinkles may appear naturally from usage. It is not a fault of the product.

⚠ CAUTION

- Wrinkles or abrasions which appear naturally from usage are not covered by warranty.
- Belts with metallic accessories, zippers or keys inside the back pocket may damage the seat fabric.
- Make sure not to wet the seat. It may change the nature of natural leather.
- Jeans or clothes which could bleach may contaminate the surface of the seat covering fabric.

Front seat adjustment

Forward and backward

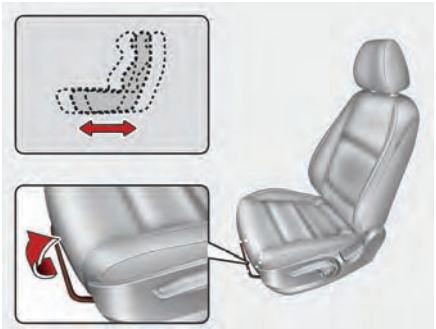
OYB030003L

To move the seat forward or backward:

1. Pull the seat slide adjustment lever up and hold it.
2. Slide the seat to the position you desire.
3. Release the lever and make sure the seat is locked in place.

Adjust the seat before driving, and make sure the seat is locked securely by trying to move forward and rearward without using the lever. If the seat moves, it is not locked properly.

Seatback angle

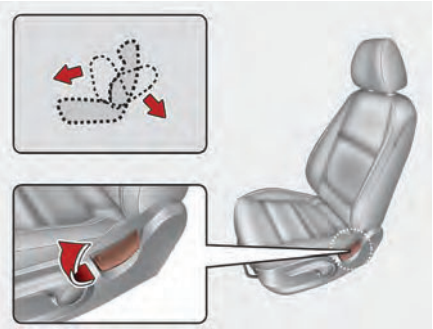
OYB030004L

To recline the seatback:

1. Lean forward slightly and lift up on the seatback recline lever.
2. Carefully lean back on the seat and adjust the seatback of the seat to the position you desire.
3. Release the lever and make sure the seatback is locked in place. (The lever MUST return to its original position for the seatback to lock.)

Seat cushion height (if equipped)

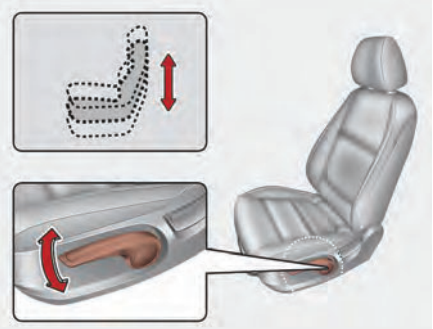
OYB030005L

To change the height of the seat cushion, push the lever that is located on the outside of the seat cushion upwards or downwards.

- To lower the seat cushion, push the lever down several times.
- To raise the seat cushion, pull the lever up several times.

Headrest

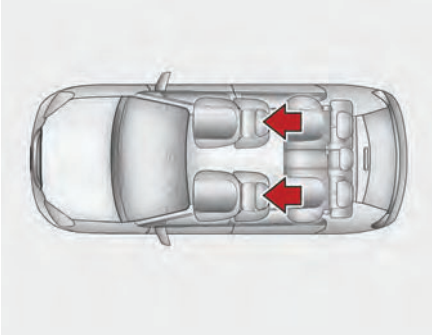
OYB030063L

The driver's and front passenger's seats are equipped with a headrest for the occupant's safety and comfort.

The headrest not only provides comfort for the driver and front passenger, but also helps to protect the head and neck in the event of a collision.

⚠ WARNING

- For maximum effectiveness in case of an accident, the headrest should be adjusted so the middle of the headrest is at the same height as the center of gravity of an occupant's head.
  Generally, the center of gravity of most people's head is similar with the height of the top of their eyes. Also, adjust the headrest as close to your head as possible. For this reason, the use of a cushion that holds the body away from the seatback is not recommended.
- Do not operate the vehicle with the headrests removed as severe injury to the occupants may occur in the event of an accident. Headrests may provide protection against neck injuries when properly adjusted.
- Do not adjust the headrest position of the driver's seat while the vehicle is in motion.

⚠ CAUTION

When there is no occupant in the rear seats, adjust the height of the headrest to the lowest position. The rear seat headrest can reduce the visibility of the rear area.

Adjusting the height up and down

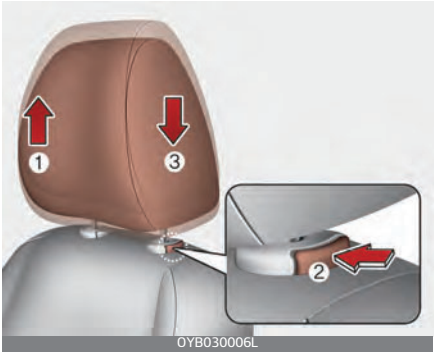

To raise the headrest, pull it up to the desired position (1). To lower the headrest, push and hold the release button (2) on the headrest support and lower the headrest to the desired position (3).



⚠ CAUTION

If you recline the seatback towards the front with the headrest and seat cushion raised, the headrest may come in contact with the sun visor or other parts of the vehicle.

Removal and installation

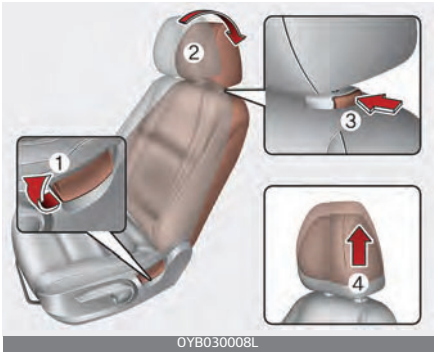

OYB030008L

To remove the headrest:

1. Recline the seatback (2) with the recline lever (1).
2. Raise headrest as far as it can go.
3. Press the headrest release button (3) while pulling the headrest up (4).

⚠ WARNING

NEVER allow anyone to ride in a seat with the headrest removed.

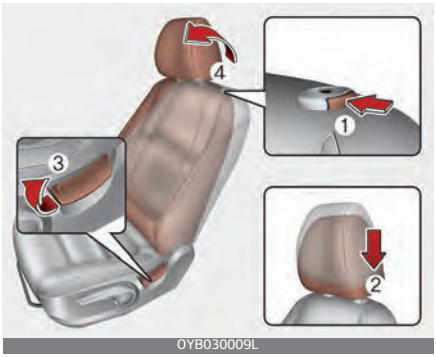

OYB030009L

To reinstall the headrest :

1. Put the headrest poles (2) into the holes while pressing the release button (1).
2. Recline the seatback (4) with the recline lever (3).
3. Adjust the headrest to the appropriate height.

⚠ WARNING

Always make sure the headrest locks into position after reinstalling and adjusting it properly.

Forward and backward adjustment (if equipped)

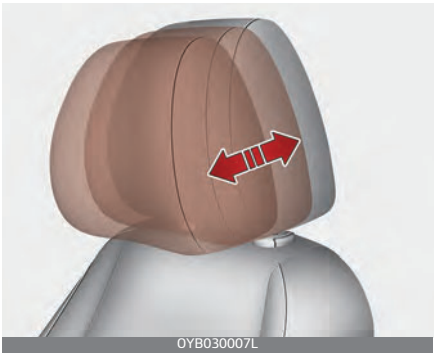
OYB030007L

The headrest may be adjusted forward to 4 different positions by pulling the headrest forward to the desired detent. To adjust the headrest to it's furthest backwards position, pull it fully forward to the farthest position and release it. Adjust the headrest so that it properly supports the head and neck.

⚠ WARNING

A gap between the seat and the headrest release button may appear when seating on the seat or when you push or pull the seat. Be careful not to get your finger, etc. caught in the gap.

Seatback pocket



OYB030010L

The seatback pocket is provided on the back of the front passenger's seatback.

⚠ WARNING

Seatback pockets

Do not put heavy or sharp objects in the seatback pockets. In an accident they could come loose from the pocket and injure vehicle occupants.

Rear seat adjustment

Headrest

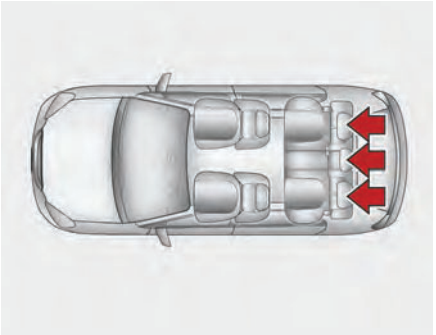

OYB030064L

The rear seat is equipped with headrests for the occupant's safety and comfort.

The headrest not only provides comfort for passengers, but also helps to protect the head and neck in the event of a collision.

⚠ WARNING



OJA030058

- For maximum effectiveness in case of an accident, the headrest should be adjusted so the middle

of the headrest is at the same height as the center of gravity of an occupant's head. Generally, the center of gravity of most people's head is similar with the height of the top of their eyes. Also adjust the headrest as close to your head as possible. For this reason, the use of a cushion that holds the body away from the seatback is not recommended.

- Do not operate the vehicle with the headrests removed. Severe injury to an occupant may occur in the event of an accident. Headrests may provide protection against severe neck injuries when properly adjusted.

Adjusting the height up and down

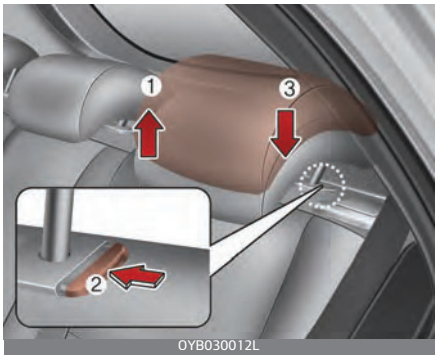

To raise the headrest, pull it up to the desired position (1). To lower the headrest, push and hold the release button (2) on the headrest support and lower the headrest to the desired position (3).

Removal and installation

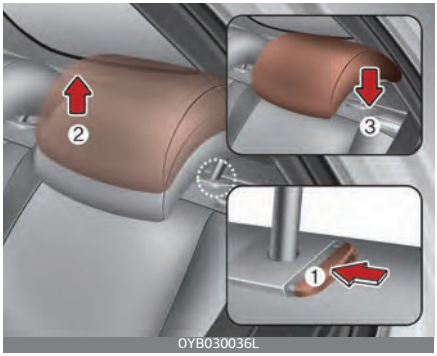

To remove the headrest, raise it as far as it can go then press the release button (1) while pulling upward (2).

To reinstall the headrest, put the headrest poles (3) into the holes while pressing the release button (1). Then adjust it to the appropriate height.

⚠ WARNING

Make sure the headrest locks in position after adjusting it to properly protect the occupants.

Folding the rear seat

The rear seatbacks may be folded to facilitate carrying long items or to increase the luggage capacity of the vehicle.

⚠ WARNING

The purpose of the fold-down rear seatbacks is to allow you to carry longer objects than could not otherwise be accommodated.

Never allow passengers to sit on top of the folded down seatback while the car is moving as this is not a proper seating position and no seat belts are available for use. This could result in serious injury or death in case of an accident or sudden stop. Objects carried on the folded down seatback should not extend higher than the top of the front seats. This could allow cargo to slide forward and cause injury or damage during sudden stops.

The rear seatbacks may be folded forward to provide additional cargo space and to provide access to the cargo area.

- To raise the seatback, lift and push it firmly until it clicks into place.
- When you return the seatback to its upright position, reposition the rear safety belts so that they can be used by rear seat passengers.

⚠ WARNING

Do not fold the rear seat, if the driver's position is not properly set according to the driver's physical figure after folding the rear seat. A sudden stop or collision may cause injury.

⚠ CAUTION

- When folding or unfolding the rear seat, make sure to move the front seat fully forward. If there are not enough space to fold the rear seat, never fold it by force. It will cause damage to the headrest or the related parts of the seat.
- Before using the seat belt, be sure to remove it from the holder. If you pull out the seat belt while it's in the holder, it may damage the seat belt or holder.
- Use the holder only when there is no passengers in the rear seat or when you need to fold the rear seat.

To fold down the rear seatback:

1. When folding the seat back, insert the rear seat belt buckle in the pocket between the rear seatback and cushion then make sure both seatbelts do not interfere with stowed luggage and cargo. Then, insert the seat belt into the two holes located on both sides.

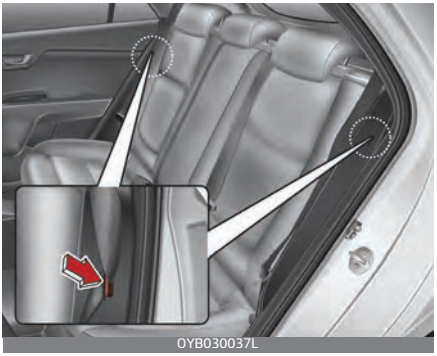

2. Set the front seatback to the upright position and if necessary, slide the front seat forward.
3. Lower the rear headrests to lowest position.
4. Pull the lock release lever and fold the rear seatback forward and down firmly.



To unfold the rear seat

1. To use the rear seat, lift and pull the seatback backward. Pull the seatback firmly until it clicks into place. Make sure the seatback is locked in place. When you return the seatback to its upright position, always be sure it has locked into position by pushing on the top of the seatback.
   If you can not see the red line at the bottom of folding lever, it means the seatback is locked completely.
2. Return the rear seat belt to the proper position.
3. When the seatback is completely installed, check the seatback folding lever again.

⚠ WARNING

Uprighting seat

When you return the seatback to its upright position, hold the seatback and return it slowly. If the seatback is returned without holding it, the back of the seat could spring forward resulting in injury caused by being struck by the seatback.

⚠ WARNING

After folding the rear seat, unless the driver's position is properly set according to the driver's physical figure, do not fold the rear seat. It may increase body injuries in a sudden stop or collision.

⚠ WARNING

When you return the rear seatback to its upright position after being folded down:

Be careful not to damage the seat belt webbing or buckle. Do not allow the seat belt webbing or buckle to get caught or pinched in the rear seat. Ensure that the seatback is completely locked into its upright position by pushing on the top of the seatback. Otherwise, in an accident or sudden stop, the seat could fold down and allow cargo enter the passenger compartment, which could result in serious injury or death.

⚠ CAUTION

Damaging rear seat belt buckles

When you fold the rear seatback, insert the buckle between the rear seatback and cushion. Doing so can prevent the buckle from being damaged by the rear seatback.

⚠ CAUTION

Rear seat belts

When returning the rear seatbacks to the upright position, remember to return the rear shoulder belts to their proper position.

⚠ WARNING

Cargo

Cargo should always be secured to prevent it from being thrown about the vehicle in a collision and causing injury to the vehicle occupants. Do not place objects in the rear seats, since they cannot be properly secured and may hit the front seat occupants in a collision.

⚠ WARNING

Cargo loading

Make sure the engine is off, the Automatic Transmission/Dual Clutch Transmission is in P (Park) or the Manual Transmission/Intelligent Manual Transmission is in 1st, and the parking brake is securely applied whenever loading or unloading cargo. Failure to take these steps may allow the vehicle to move if the shift lever is inadvertently moved to another position.

Seat belts

Seat belt restraint system

⚠ WARNING

- For maximum restraint system protection, the seat belts must always be used whenever the car is moving.
- Seat belts are most effective when seatbacks are in the upright position.
- Children age 13 and younger must always be properly restrained in the rear seat. Never allow children to ride in the front passenger seat. If a child over 13 must be seated in the front seat, he/she must be properly belted and the seat should be moved as far back as possible.
- Never wear the shoulder belt under your arm or behind your back. An improperly positioned shoulder belt can cause serious injuries in a crash. The shoulder belt should be positioned midway over your shoulder across your collarbone.
- Never wear a seat belt over fragile objects. If there is a sudden stop or impact, the seat belt can damage it.
- Avoid wearing twisted seat belts. A twisted belt can't do its job as well. In a collision, it could even cut into you. Be sure the belt webbing is straight and not twisted.
- Be careful not to damage the belt webbing or hardware. If the belt webbing or hardware is damaged, replace it.

⚠ WARNING

Seat belts are designed to bear upon the bony structure of the body, and should be worn low across the front of the pelvis or the pelvis, chest and shoulders, as applicable; wearing the lap section of the belt across the abdominal area must be avoided.

Seat belts should be adjusted as firmly as possible, consistent with comfort, to provide the protection for which they have been designed.

A slack belt will greatly reduce the protection afforded to the wearer.

Care should be taken to avoid contamination of the webbing with polishes, oils and chemicals, and particularly battery acid.

Cleaning may safely be carried out using mild soap and water. The belt should be replaced if webbing becomes frayed, contaminated or damaged.

It is essential to replace the entire assembly after it has been worn in a severe impact even if damage to the assembly is not obvious. Belts should not be worn with straps twisted. Each belt assembly must

only be used by one occupant; it is dangerous to put a belt around a child being carried on the occupant's lap.

⚠ WARNING

- No modifications or additions should be made by the user which will either prevent the seat belt adjusting devices from operating to remove slack, or prevent the seat belt assembly from being adjusted to remove slack.
- When you fasten the seat belt, be careful not to latch the seat belt in buckles of other seat. It's very dangerous and you may not be protected by the seat belt properly.
- Do not unfasten the seat belt and do not fasten and unfasten the seat belt repeatedly while driving.This could result in loss of control, and an accident causing death, serious injury, or property damage.
- When fastening the seat belt, make sure that the seat belt does not pass over objects that are hard or can break easily.
- Make sure there is nothing in the buckle. The seat belt may not be fastened securely.

Seat belt warning

Driver's seat belt warning



As a reminder to the driver, the driver's seat belt warning lights will illuminate for approximately 6 seconds each time you turn the ignition switch or ENGINE START/STOP button ON regardless of belt fastening. If the seatbelt is not fastened, the warning chime will sound for about 6 seconds.If you start to drive without the seat belt fastened or you unfasten the seat belt when you drive under 20 km/h or stop, the corresponding warning light will illuminate.

If you start to drive without the seat belt fastened or you unfasten the seat belt when you drive 20 km/h and faster, the warning light will blink and warning chime will sound for approximately 100 seconds.

When the seat belt is unfastened during driving, the warning light will illuminate when the speed is under 20 km/h.

When the speed is 20 km/h and faster, the warning light will blink and warning chime will sound for approximately 100 seconds.

Front passenger's seat belt warning (if equipped)

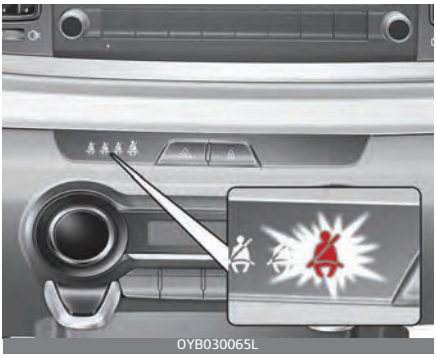

As a reminder to the front passenger, the front passenger's seat belt warning lights will illuminate for approximately 6 seconds each time you turn the ignition switch or ENGINE START/STOP button ON regardless of belt fastening.

If you start to drive without the seat belt fastened or you unfasten the seat belt when you drive under 20 km/h or stop, the corresponding warning light will illuminate.

If you start to drive without the seat belt fastened or you unfasten the seat belt when you drive 20 km/h and faster, the warning light will blink and warning chime will sound for approximately 100 seconds.

When the seat belt is unfastened during driving, the warning light will illuminate when the speed is under 20 km/h. When the speed is 20 km/h and faster, the warning light will blink and warning chime will sound for approximately 100 seconds.

⚠ WARNING

Riding in an improper position adversely affects the front seat belt warning system. It is important for the driver to instruct the passenger to properly be seated as instructed in this manual.

✻ NOTICE

- You can find the front passenger's seat belt warning light on the center fascia panel.
- Although the front passenger seat is not occupied, the seat belt warning light will blink or illuminate for 6 seconds.
- The front passenger's seat belt warning may operate when lu gage is placed on the front passenger seat.

Rear passenger's seat belt warning (if equipped)

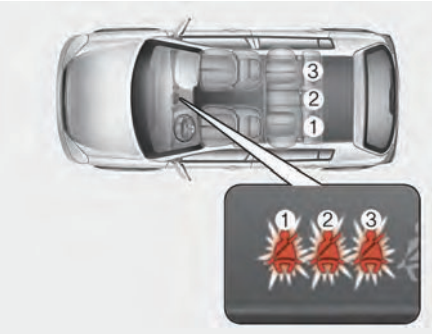

OYB030066L

As a reminder to the rear passenger, the rear passenger's seat belt warning lights will illuminate for approximately 6 seconds each time you turn the ignition switch ON regardless of belt fastening.

If the seat belt is not fastened when the ignition switch is turned ON, the seat belt warning light will illuminate for approximately 70 seconds.

If you start to drive without the seat belt fastened or you unfasten the seat belt when you drive under 20km/h, the corresponding warning light will continue to illuminate for approximately 70 seconds.

If you continue to drive without the seat belt fastened or you unfasten the seat belt when you drive over 20km/h, the seat belt warning chime will sound for approximately 35 seconds and the corresponding warning light will blink.

If the rear door is opened and closed under 10km/h, warning light and warning chime does not work even if driving over 20km /h.

Lap/Shoulder belt

Height adjustment (front seat) (if equipped)

Front seat

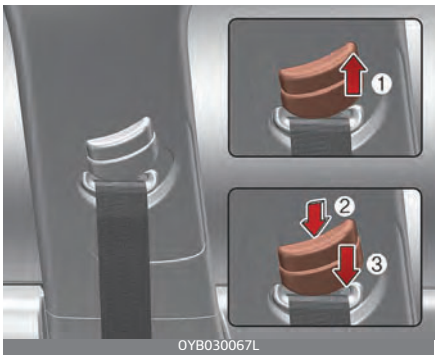

OYB030067L

You can adjust the height of the shoulder belt anchor to one of the 3 positions for maximum comfort and safety.

The height of the adjusting seat belt should not be too close to your neck. The shoulder portion should be adjusted so that it lies across your chest and midway over your shoulder near the door and not your neck.

To adjust the height of the seat belt anchor, lower or raise the height adjuster into an appropriate position.

To raise the height adjuster, pull it up (1). To lower it, push it down (3) while pressing the height adjuster button (2). Release the button to lock the anchor into position. Try sliding the height adjuster to make sure that it has locked into position.

Improperly positioned seat belts can cause serious injuries in an accident.

⚠ WARNING

- Verify the shoulder belt anchor is locked into position at the appropriate height. Never position the shoulder belt across your neck or face.
- Failure to replace seat belts after an accident could leave you with damaged seat belts that will not provide protection in the event of another collision leading to personal injury or death. Replace your seat belts after being in an accident as soon as possible.

To fasten your seat belt:

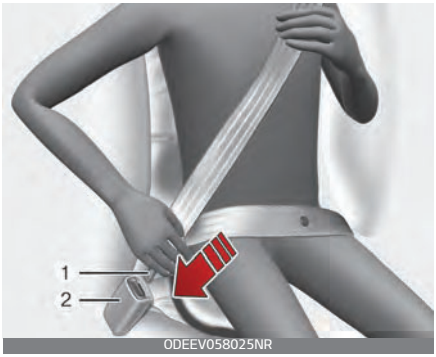

ODEEV058025NR

To fasten your seat belt, pull it out of the retractor and insert the metal tab (1) into the buckle (2). There will be an audible "click" when the tab locks into the buckle.

The seat belt automatically adjusts to the proper length only after the lap belt portion is adjusted manually so that it fits snugly around your hips. If you lean forward in a slow, easy motion, the belt will extend and let you move around. If there is a sudden stop or impact, however, the belt will lock into position. It will also lock if you try to lean forward too quickly.

✻ NOTICE

If you are not able to pull out the seat belt from the retractor, firmly pull the belt out and release it. Then you will be able to pull the belt out smoothly.


ODEEV058026NR

⚠ WARNING

You should place the lap belt portion as low as possible and snugly across your hips, not on your waist. If the lap belt is located too high on your waist, it may increase the chance of injury in the event of a collision. Both arms should not be under or over the belt. Rather, one should be over and the other under, as shown in the illustration.

Never wear the seat belt under the arm nearest the door.

The seat belt should be locked into the buckle on each seat cushion to be properly fastened.



OYB030047L

* A : Rear right seat belt fastening buckle

B : Rear center seat belt fastening buckle

C : Rear left seat belt fastening buckle

When using the rear center seat belt, the buckle with the “CENTER” mark must be used.

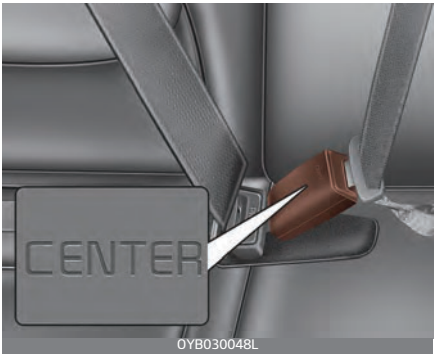

OYB030048L

⚠ CAUTION

Do not force to lock the left or right seat belt into the center seat belt buckle.

Make sure to lock the rear ceter seat belt into the center seat belt buckle.

If not, the improperly fastened seat belt will not be able to provide protection.

Rear center seatbelt :

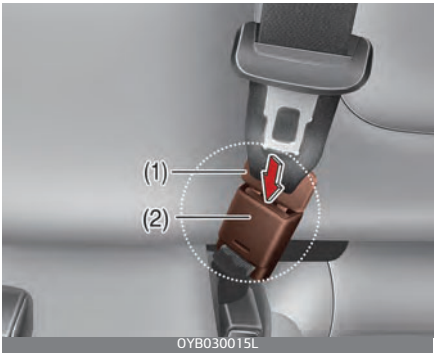

OYB030015L

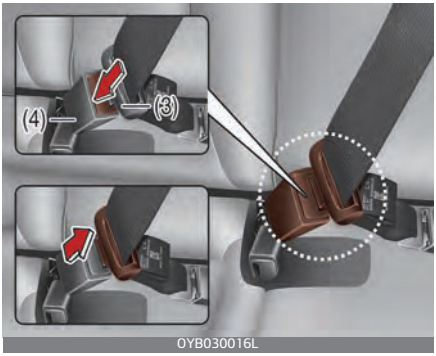

OYB030016L

Pull the metal tab (3) and insert it (3) into the buckle (4). There will be an audible “click” when the tab locks into the buckle. Make sure the belt is not twisted. When using the rear center seat belt the buckle with the “CENTER” mark must be used.

To release the seat belt:



ODEEV058078NR

The seat belt is released by pressing the release button (1) on the locking buckle. When it is released, the belt should automatically draw back into the retractor.

If this does not happen, check the belt to be sure it is not twisted, then try again.

Stowing the rear seat belt

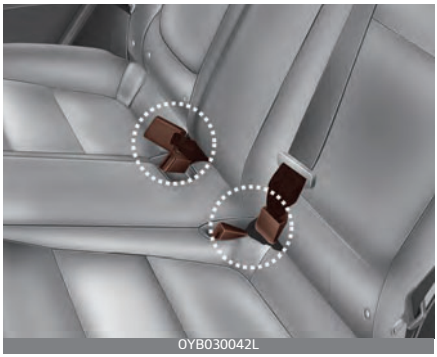
OYB030042L

The rear seat belt buckles can be stowed in the pocket between the rear seatback and cushion when not in use.

Pre-tensioner seat belt (if equipped)


OON038092NR

Your vehicle is equipped with pre-tensioner seatbelts at the front and rear outboard seating positions. The purpose of the pre-tensioner is to

make sure that the seat belts fit tightly against the occupant's body in certain collisions. The pre-tensioner seat belts may be activated in crashes where the collision is severe enough.

When the vehicle stops suddenly, or if the occupant tries to lean forward too quickly, the seat belt retractor will lock into position. In certain frontal collisions, the pre-tensioner will activate and pull the seat belt into tighter contact against the occupant's body.

If the system senses excessive tension on the driver or passenger's seat belt when the pre-tensioner activates, the load limiter inside the pre-tensioner will release some of the pressure on the affected seat belt. (if equipped)

⚠ WARNING

For your safety, be sure that the belt webbing is not loose or twisted and always sit properly on your seat.

✻ NOTICE

The pre-tensioner will activate not only in a frontal collision but also in a side collision, if the vehicle is equipped with a side or curtain air bag.

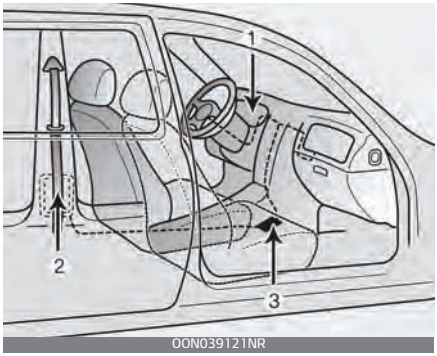

The seat belt pre-tensioner system consists mainly of the following components.Their locations are shown in the illustration:

1. SRS air bag warning light
2. Retractor pre-tensioner assembly
3. SRS control module

⚠ WARNING

To obtain maximum benefit from a pre-tensioner seat belt:

1. The seat belt must be worn correctly and adjusted to the proper position. Please read and follow all of the important information and precautions about your vehicle's occupant safety features – including seat belts and air bags – that are provided in this manual.
2. Be sure you and your passengers always wear seat belts properly.

NOTICE

- Pre-tensioners equipped at the front and rear outboard seating positions will be activated in certain collisions. The pre-tensioner seat belts can be activated, where the collision is severe enough, together with the air bags.
- When the pre-tensioner seat belts are activated, a loud noise may be heard and fine dust, which may appear to be smoke, may be visible in the passenger compartment. These are normal operating conditions and are not hazardous.
- Although it is harmless, the fine dust may cause skin irritation and should not be breathed for prolonged periods. Wash all exposed skin areas thoroughly after an accident in which the pre-tensioner seat belts were activated.
- Because the sensor that activates the SRS air bag is connected with the pre-tensioner seat belt, the SRS air bag warning light on the instrument panel will illuminate for approximately 6 seconds after the ignition switch has been turned to the ON position, and then it should turn off.

CAUTION

If the pre-tensioner seat belt is not working properly, the SRS air bag warning light will illuminate even if there is no malfunction of the SRS air bag. If the SRS air bag warning light does not illuminate when the ignition key is turned to ON, or if it remains illuminated after illuminating for approximately 6 seconds, or if it illuminates while the vehicle is being driven, have the system inspected by a professional workshop. Kia recommends to visit an authorized Kia dealer/service partner.

WARNING

- Pre-tensioners are designed to operate only one time. After activation, pre-tensioner seat belts must be replaced. All seat belts, of any type, should always be replaced after they have been worn during a collision.
- The pre-tensioner seat belt assembly mechanisms become hot during activation. Do not touch the pre-tensioner seat belt assemblies for several minutes after they have been activated.
- Do not attempt to inspect or replace the pre-tensioner seat belts yourself. Have the system inspected by a professional workshop. Kia recommends to visit an

authorized Kia dealer/service partner.
- Do not strike the pre-tensioner seat belt assemblies.
- Do not attempt to service or repair the pre-tensioner seat belt system in any manner.
- Improper handling of the pre-tensioner seat belt assemblies, and failure to heed the warnings not to strike, modify, inspect, replace, service or repair the pre-tensioner seat belt assemblies may lead to improper operation or inadvertent activation and serious injury.
- Always wear the seat belts when driving or riding in a motor vehicle.
- If the vehicle or pre-tensioner seat belt must be discarded, contact a professional workshop. Kia recommends to visit an authorized Kia dealer/service partner.

⚠ CAUTION

Body work on the front area of the vehicle may damage the pre-tensioner seat belt system.Therefore, have the system serviced by a professional workshop. Kia recommends to visit an authorized Kia dealer/service partner.

Seat belt precautions

⚠ WARNING

- All occupants of the vehicle must wear their seat belts at all times. Seat belts and child restraints reduce the risk of serious or fatal injuries for all occupants in the event of a collision or sudden stop. Without a seat belt, occupants could be shifted too close to a deploying air bag, strike the interior structure or be thrown from the vehicle. Properly worn seat belts greatly reduce these hazards.
  Always follow the precautions about seat belts, air bags and occupant safety contained in this manual.
- Never wear a seat belt over fragile objects. If there is a sudden stop or impact, the seat belt can damage it.

Infant or small child

You should be aware of the specific requirements in your country. Child and/or infant seats must be properly placed and installed in the rear seat. For more information about the use of these restraints, refer to "Child Restraint System (CRS)" on page 3-28.

⚠ WARNING

Every person in your vehicle needs to be properly restrained at all times, including infants and children. Never hold a child in your arms or lap when riding in a vehicle. The violent forces created during a crash will tear the child from your arms and throw the child against the interior. Always use a child restraint appropriate for your child's height and weight.

✻ NOTICE

Small children are best protected from injury in an accident when properly restrained in the rear seat by a child restraint system that meets the requirements of the Safety Standards of your country. Before buying any child restraint system, make sure that it has a label certifying that it meets Safety Standards of your country. The restraint must be appropriate for your child's height and weight. Check the label on the child restraint for this information. Refer to "Child Restraint System (CRS)" on page 3-28.

Larger children

Children who are too large for child restraint systems should always occupy the rear seat and use the available lap/shoulder belts. The lap portion should be fastened and snugged on the hips and as low as possible. Check if belt fits periodically. A child's squirming could put the belt out of position. Children are given the most safety in the event of an accident when they are restrained by a proper restraint system in the rear seat. If a larger child (over age 13) must be seated in the front seat, the child should be securely restrained by the available lap/shoulder belt and the seat should be placed in the rearmost position. Children age 13 and under should be restrained securely in the rear seat. NEVER place a child age 13 and under in the front seat. NEVER place a rear facing child seat in the front seat of a vehicle.

If the shoulder belt portion slightly touches the child's neck or face, try placing the child closer to the center of the vehicle. If the shoulder belt still touches their face or neck they need to be returned to a child restraint system.

⚠ WARNING

Shoulder belts on small children

- Never allow a shoulder belt to be in contact with a child's neck or face while the vehicle is in motion.

- If seat belts are not properly worn and adjusted on children, there is a risk of death or serious injury.

Pregnant women

The use of a seat belt is recommended for pregnant women to lessen the chance of injury in an accident. When a seat belt is used, the lap belt portion should be placed as low and snugly as possible on the hips, not across the abdomen. For specific recommendations, consult a physician.

⚠ WARNING

Pregnant women

Pregnant women must never place the lap portion of the safety belt over the area of the abdomen where the fetus is located or above the abdomen where the belt could crush the fetus during an impact.

Injured person

A seat belt should be used when an injured person is being transported. When this is necessary, you should consult a physician for recommendations.

One person per belt

Two people (including children) should never attempt to use a single seat belt. This could increase the severity of injuries in case of an accident.

Do not lie down

To reduce the chance of injuries in the event of an accident and to achieve maximum effectiveness of the restraint system, all passengers should be sitting up and the front and rear seats should be in an upright position when the vehicle is moving. A seat belt cannot provide proper protection if the person is lying down in the rear seat or if the front and rear seats are in a reclined position.

⚠ WARNING

Riding with a reclined seatback increases your chance of serious or fatal injuries in the event of a collision or sudden stop. The protection of your restraint system (seat belts and air bags) is greatly reduced by reclining your seat. Seat belts must be snug against your hips and chest to work properly. The more the seatback is reclined, the greater the chance that an occupant's hips will slide under the lap belt causing serious internal injuries or the occupant's neck could strike the shoulder belt. Drivers and passengers should always sit well back in their seats, properly belted, and with the seatbacks upright.

Care of seat belts

Seat belt systems should never be disassembled or modified. In addition, care should be taken to assure that seat belts and belt hardware are not damaged by seat hinges, doors or other abuse.

⚠ WARNING

- When you return the rear seatback to its upright position after the rear seatback has been folded down, be careful not to damage the seat belt webbing or buckle. Be sure that the webbing or buckle does not get caught or pinched in the rear seat. A seat belt with damaged webbing or buckle could possibly fail during a collision or sudden stop, resulting in serious injury. If the webbing or buckles are damaged, get them replaced immediately.
- Seatbelts can become hot in a vehicle that has been closed up in sunny weather. They could burn infants and children.

Periodic inspection

All seat belts should be inspected periodically for wear or damage of any kind. Any damaged parts should be replaced as soon as possible.

Keep belts clean and dry

Seat belts should be kept clean and dry. If belts become dirty, they can be cleaned by using a mild soap solution and warm water. Bleach, dye, strong detergents or abrasives should not be used because they may damage and weaken the fabric.

When to replace seat belts

Entire in-use seat belt assembly or assemblies should be replaced if the vehicle has been involved in an accident. This should be done even if no damage is visible. In this case, have the system replaced by a professional workshop. Kia recommends to consult an authorized Kia dealer/service partner.

Child Restraint System (CRS)

Our recommendation: Children always in the rear

⚠ WARNING

Always properly restrain children in the vehicle. Children of all ages are safer when riding in the rear seats. Never place a rearward-facing Child Restraint System on the front passenger seat, unless the air bag is deactivated.

Children under age 13 should always ride in the rear seats and must always be properly restrained to minimize the risk of injury in an accident, sudden stop or sudden maneuver.

According to accident statistics, children are safer when properly restrained in the rear seats than in the front seat. Children too large for a Child Restraint System must use the seat belts provided.

Most countries have regulations which require children to travel in approved Child Restraint Systems.

The laws governing the age or height/weight restrictions at which seat belts can be used instead of Child Restraint System differs among countries, so you should be aware of the specific requirements in your country, and where you are travelling.

Child Restraint Systems must be properly installed in the vehicle seat. Always use a commercially available Child Restraint System that meets the requirements of your country.

Child Restraint System (CRS)

Infants and younger children must be restrained in an appropriate rearwardfacing or forward-facing CRS that has first been properly secured to the seat of the vehicle. Read and comply with the instructions for installation and use provided by the manufacturer of the Child Restraint System.

⚠ WARNING

- Always follow the Child Restraint System manufacturer's instructions for installation and use.
- Always properly restrain your child in the Child Restraint System.
- Do not use an infant carrier or a child safety seat that "hooks" over a seatback, it may not provide adequate protection in an accident.
- After an accident, have the system checked by a professional workshop. Kia recommends to

visit an authorized Kia dealer/service partner.

Selecting a Child Restraint System (CRS)

When selecting a Child Restraint System for your child, always:

- Make sure the Child Restraint System has a label certifying that it meets applicable Safety Standards of your country.
  A Child Restraint System may only be installed if it was approved in accordance with the requirements of ECE-R44 or ECE-R129.
- Select a Child Restraint System based on your child's height and weight. The required label or the instructions for use typically provide this information.
- Select a Child Restraint System that fits the vehicle seating position where it will be used.
  For the suitability of Child Restraint Systems on the vehicle's seating positions, please refer to the installation tables.
- Read and comply with the warnings and instructions for installation and use provided with the Child Restraint System.

Child Restraint System types

There are three main types of Child Restraint Systems: rearward-facing, forward-facing and booster Child Restraint Systems.

They are classified according to the child's age, height and weight.

Rearward-facing Child Restraint System


OYB030072L

A rearward-facing Child Restraint System provides restraint with the seating surface against the back of the child. The harness system holds the child in place, and in an accident, acts to keep the child positioned in the Child Restraint Systems and reduce the stress to the fragile neck and spinal cord.

All children under the age of one year must always ride in a rearwardfacing Child Restraint System. There are different types of rearward-facing Child Restraint Systems: infant-only Child Restraint Systems can only be used rearward-facing. Convertible and 3-in-1 Child Restraint Systems typically have higher height and weight limits

for the rearward-facing position, allowing you to keep your child rearward-facing for a longer period of time.

Keep using Child Restraint Systems in the rearward-facing position as long as children fit within the height and weight limits allowed by the Child Restraint System's manufacturer.

Forward-facing Child Restraint System


OYB030073L

A forward-facing Child Restraint System provides restraint for the child's body with a harness. Keep children in a forward-facing Child Restraint System with a harness until they reach the top height or weight limit allowed by your Child Restraint System's manufacturer.

Once your child outgrows the forward-facing Child Restraint System, your child is ready for a booster seat.

Booster seats

A booster seat is a Child Restraint System designed to improve the fit of the vehicle's seat belt system. A booster seat positions the seat belt so that it fits properly over the stronger parts of your child's body. Keep your children in booster seats until they are big enough to fit in a seat belt properly.

For a seat belt to fit properly, the lap belt must lie comfortable across the upper thighs, not the stomach. The shoulder belt should lie comfortable across the shoulder and chest and not across the neck or face. Children under age 13 must always be properly restrained to minimize the risk of injury in an accident, sudden stop or sudden maneuver.

Installing a Child Restraint System (CRS)

⚠ WARNING

Before installing your Child Restraint System always:

Read and follow the instructions provided by the manufacturer of the Child Restraint System.

Failure to follow all warnings and instructions could increase the risk of the SERIOUS INJURY or DEATH if an accident occurs.

⚠ WARNING

If the vehicle headrest prevents proper installation of a Child Restraint System, the headrest of the respective seating position shall be readjusted or entirely removed.

After selecting a proper Child Restraint System for your child and checking that the Child Restraint System fits properly on the seating position, there are three general steps for a proper installation:

- **Properly secure the Child Restraint System to the vehicle.** All Child Restraint Systems must be secured to the vehicle with the lap belt or lap part of a lap/shoulder belt or with the ISOFIX top-tether and/or ISOFIX anchorage and/or with the support leg.
- **Make sure the Child Restraint System is firmly secured.** After installing a Child Restraint System to the vehicle, push and pull the seat forward and from side-to-side to verify that it is securely attached to the seat. A Child Restraint System secured with a seat belt should be installed as firmly as possible. However, some side-toside movement can be expected.
  When installing a Child Restraint System, adjust the vehicle seat and seatback (up and down, forward and rearward) so that your child fits in the Child Restraint System in a confortable manner.
- **Secure the child in the Child Restraint System.** Make sure the child is properly strapped in the Child Restraint System according to the Child Restraint System manufacturer's instructions.

⚠ CAUTION

A Child Restraint System in a closed vehicle can become very hot. To prevent burns, check the seating surface and buckles before placing your child in the Child Restraint System.

ISOFIX anchorage and top-tether anchorage (ISOFIX anchorage system) for children (if equipped)

The ISOFIX system holds a Child Restraint System during driving and in an accident. This system is designed to make installation of the Child Restraint System easier and reduce the possibility of improperly installing your Child Restraint System. The ISOFIX system uses anchors in the vehicle and attachments on the Child Restraint System. The ISOFIX system eliminates the need to use seat belts to secure the Child Restraint System to the rear seats.

ISOFIX anchorages are metal bars built into the vehicle. There are two lower anchors for each ISOFIX seat-

ing position that will accommodate a Child Restraint System with lower attachments.

To use the ISOFIX system in your vehicle, you must have a Child Restraint System with ISOFIX attachments.

The Child Restraint System manufacturer will provide you with instructions on how to use the Child Restraint System with its attachments for the ISOFIX anchorages.


ODEEV058037NR

ISOFIX anchorages have been provided in the left and right outboard rear seating positions. Their locations are shown in the illustration.

⚠ WARNING

Do not attempt to install a Child Restraint System using ISOFIX anchorages in the rear center seating position. There are no ISOFIX anchorages provided for this seat. Using the outboard seat anchorages, for the CRS installation on the rear center seating position, can damage the anchorages.

Type A

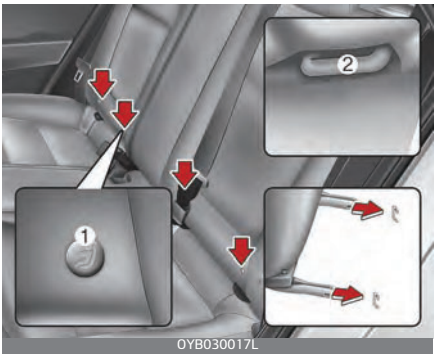

OYB030017L

Type B

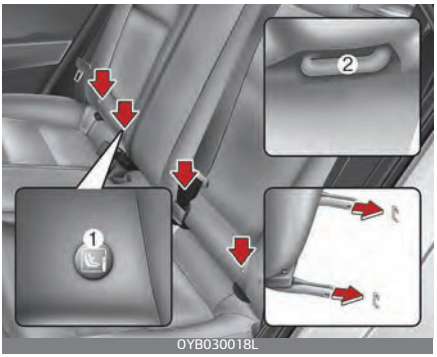

OYB030018L

ISOFIX anchorages are located between the seatback and the seat cushion of the rear seat left and right outboard seating positions, indicated by the symbols.

* (1) : ISOFIX Anchor Position Indicator (Type A- , Type B-)

(2) : ISOFIX Anchor

Securing a Child Restraint System with the "ISOFIX Anchorage System"

To install an i-Size or ISOFIX-compatible Child Restraint System in either of the rear outboard seating positions:

1. Move the seat belt buckle away from the ISOFIX anchorages.
2. Move any other objects away from the anchorages that could prevent a secure connection between the Child Restraint System and the ISOFIX anchorages.
3. Place the Child Restraint System on the vehicle seat, then attach the seat to the ISOFIX anchorages according to the instructions provided by the Child Restraint System manufacturer.
4. Follow the instructions of the Child Restraint System's manufacturer for proper installation and connection of the ISOFIX attachments on the Child Restraint System to the ISOFIX anchorages.

⚠ WARNING

Take the following precautions when using the ISOFIX system:

- Read and follow all installation instructions provided with your Child Restraint System.
- To prevent the child from reaching and taking hold of unretracted seat belts, buckle all unused rear seat belts and retract the seat belt webbing behind the child. Children can be strangled if a shoulder belt becomes wrapped around their neck and the seat belt tightens.
- NEVER attach more than one Child Restraint System to a single anchorage. This could cause the anchor or attachment to come loose or break.
- Always have the ISOFIX system inspected by your dealer after an accident. An accident can damage the ISOFIX system and may not properly secure the Child Restraint System.

Securing a Child Restraint System seat with "Top-tether Anchorage" system



Child restraint system top tether anchorages are located on the back of the rear seatbacks.



1. Route the Child Restraint System top-tether strap over the seatback. Placing the top tether strap, please follow the instructions of the Child Restraint System manufacturer.
2. Connect the top-tether strap to the top-tether anchorage, then tighten the top-tether strap according to the instructions of your Child Restraint System's manufacturer to firmly attach the Child Restraint System to the seat.

⚠ WARNING

Take the following precautions when installing the top-tether:

- Read and follow all installation instructions provided with your Child Restraint System.
- NEVER attach more than one Child Restraint System to a single ISOFIX top-tether anchorage. This could cause the anchorage or attachment to come loose or break.
- Do not attach the top-tether to anything other than the correct top-tether anchorage. It may not work properly if attached to something else.
- Child Restraint System anchorages are designed to withstand only those loads imposed by correctly fitted Child Restraint System.
  Under no circumstances are they to be used for adult seat belts or harnesses or for attaching other items or equipment to the vehicle.

Suitability of each seating position for belted & ISOFIX Child Restraint Systems (CRS) according to UN regulations (Information for use by vehicle users and CRS manufacturers)

- Yes : Suitable for fitment of the designated category of CRS
- No : Not suitable for fitment of the designated category of CRS
- "–" : Not applicable
- The table is based on LHD vehicle. Except for the front passenger seat, the table is valid for RHD vehicle.For RHD vehicle front passenger of number 1, please use information for the seating position number 2.

CRS categories		Seating positions						Remarks
		1	2		3	4	5	
			Airbag ON	Airbag Off				
Universal belted CRS*1		–	No	Yes F, R	Yes F,R	Yes*2 F,R	Yes F,R	F : Forward facing R : Rearward facing
i-size CRS	ISOFIX CRF : F2, F2X, R1, R2	–	No	No	Yes*3 F,R	No	Yes*3 F,R	
Carry-cot (ISOFIX lateral facing CRS)	ISOFIX CRF: L1, L2	–	No	No	No	No	No	
ISOFIX infant* CRS (* : ISOFIX baby CRS)	ISOFIX CRF : R1	–	No	No	Yes R	No	Yes R	
ISOFIX toddler CRS – small	ISOFIX CRF : F2,F2X, R2,R2X	–	No	No	Yes*3 F,R	No	Yes*3 F,R	
ISOFIX toddler CRS – large* (* : not booster seats)	ISOFIX CRF : F3,R3	–	No	No	Yes*3 F,R	No	Yes*3 F,R	
Booster Seat – reduced Width	ISO CRF : B2	–	No	No	Yes*3	No	Yes*3	
Booster Seat – full Width	ISO CRF : B3	–	No	No	Yes*3	No	Yes*3	

*1.The universal belted CRS applies to all groups.
*2.The seating position (number5) is not suitable for fitment of child restraint system with support leg.
*3.For installation of R2, R3,B2, B3 size CRS.

– Driver seat : You should move the driver seat to the mid position and adjust the height of seat to the highest position.

– Front passenger seat : You should move the passenger seat to the foremost position.

※ Never place a rearward facing Child Restraint System on the front passenger seat, unless the air bag is deactivated.

※ For semi-universal or vehicle specific CRS(ISOFIX or belted CRS), please see the vehicle list provided in the manual of CRS.

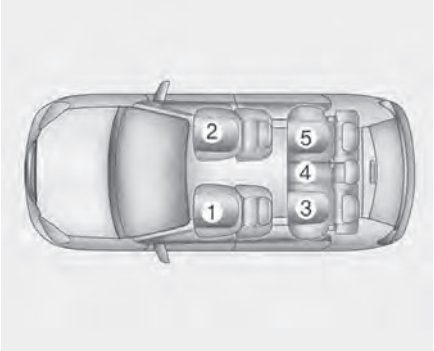

OYB030088L

Seat Number	Position in the vehicle
1	Front left
2	Front right
3	2nd row left
4	2nd row center
5	2nd row right

Securing a Child Restraint System with a lap/shoulder belt

When not using the ISOFIX system, all Child Restraint Systems must be secured to a rear seat with the lap part of a lap/shoulder belt.

Installing a Child Restraint System with a lap/shoulder belt

To install a Child Restraint System on the rear seats, do the following:

1. Place the Child Restraint System on a rear seat and route the lap/shoulder belt around or through the Child Restraint System, following the Child Restraint System manufacturer's instructions. Make sure the seat belt webbing is not twisted.


OYB030075L

2. Fasten the lap/shoulder belt latch into the buckle. Listen for the distinct "click" sound. Position the release button so that it is easy to access in case of an emergency.


ODEEV058042NR

3. Remove as much slack from the belt as possible by pushing down on the Child Restraint System while feeding the shoulder belt back into the retractor.
4. Push and pull on the Child Restraint System to confirm that the seat belt is holding it firmly in place.


ODEEV058043NR

If your Child Restraint System manufacturer recommends the use of a top-tether with the lap/shoulder belt, If your Child Restraint System manufacturer recommends the use of a top-tether with the lap/shoulder belt, please refer to "ISOFIX

anchorage and top-tether anchorage (ISOFIX anchorage system) for children (if equipped)" on page 3-31.

To remove the Child Restraint System, press the release button on the buckle and then pull the lap/shoulder belt out of the Child Restraint System and allow the seat belt to retract fully.

Suitability of each seating position for "universal" category belted Child Restraint Systems according to ECE regulations (For Europe)

Use Child Restraint System that have been officially approved and are appropriate for your children. When using the Child Restraint System, refer to the following table.

Mass Group		Seating Position				
		Front Passenger Outboard		Second Row		
		Airbag activated	Airbag deactivated	Outboard Left	Center (3 POINT BELT)	Outboard Right
Group 0 (0-9months)	up to 10kg	X	U	U	U*	U
Group 0 + (0-2years)	up to 13kg	X	U	U	U*	U
Group I (9months-4years)	9 to 18kg	X	U	U	U*	U
Group II (15 to 25kg)	15 to 25kg	UF	U	U	U*	U
Group III (22 to 36kg)	22 to 36kg	UF	U	U	U*	U

U = Suitable for "universal" category Child Restraint Systems approved for use in this mass group

U* = Seating position not suitable for fitment of Child Restraint Systems with support leg

UF = Suitable for forward facing "universal" category restraints approved for use in this mass group

L = Suitable for particular child restraints given on attached list. These restraints may be of the "specific vehicle", "restricted" or "semi-universal" categories.

B = Built-in restraint approved for this mass group.

X = Seat position not suitable for children in this mass group.

i-Size Child Restraint Systems according to ECE regulations

Mass Group	Seating Position			
	Front Passenger Outboard	Second Row		
		Outboard Left	Center	Outboard Right
i-size Child Restraints Systems	X	i-U	X	i-U

i-U = Suitable for i-Size "universal" Child Restraints Systems forward and rearward facing

X = Seat position not suitable for i-size CRS.

Recommended child restraint systems – For Europe

Mass Group	Name	Manufacture	Type of Fixation	ECE-R44 Approval No.
Group 0-1	Baby Safe Plus	Britax Römer	Rearward-facing with ISOFIX Base	E1 04301146
Group 1	Duo Plus	Britax Römer	Forward-facing with ISOFIX and top-tether	E1 04301133
Group 2	KidFix II XP	Britax Römer	Forward-facing with ISOFIX and vehicle belt	E1 04301323
Group 3	Junior III	Graco	Forward-facing with vehicle belt	E11 03.44.164 E11 03.44.165

* **The Graco Junior III will be used without the backrest**

CRS Manutacturer information

Britax Romer http://www.britax.com

Graco http://www.gracobaby.com

Air bag – supplemental restraint system (if equipped)

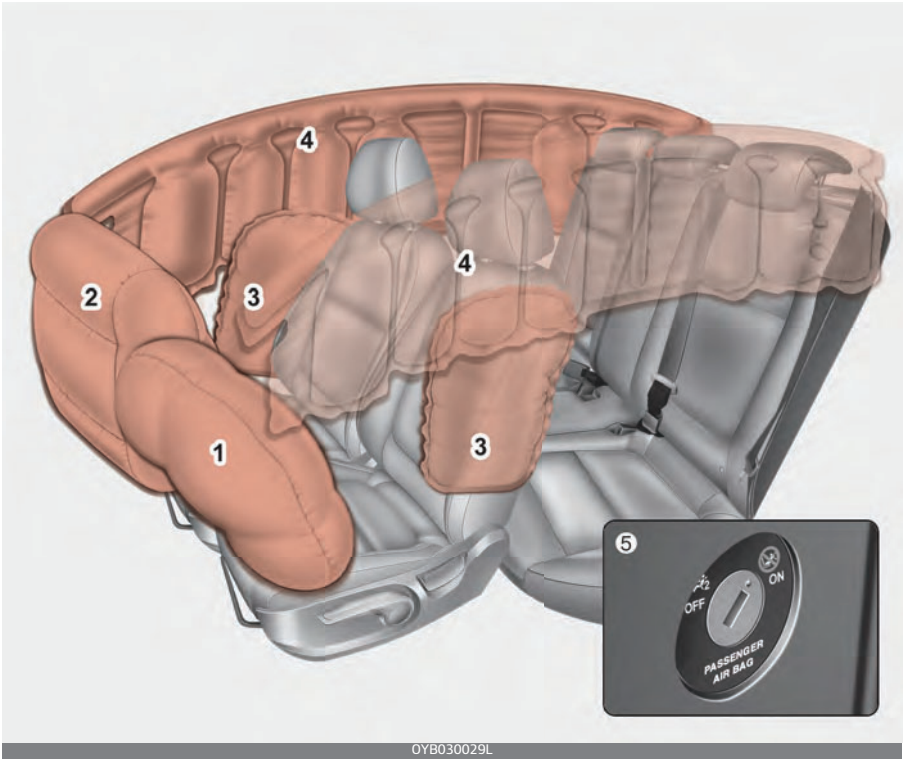

OYB030029L

* The actual air bags in the vehicle may differ from the illustration.

1. Driver's front air bag
2. Passenger's front air bag
3. Side air bag
4. Curtain air bag
5. Front passenger's air bag ON/OFF switch*

* : if equipped

⚠ WARNING

- Even in vehicles with air bags, you and your passengers must always wear the safety belts provided in order to minimize the risk and severity of injury in the event of a collision or rollover.
- SRS and pre-tensioners contain explosive chemicals.
  If scraping a vehicle without removing SRS and pre-tensioners from a vehicle, it may cause fire. Before scraping a vehicle, contact a professional workshop. Kia recommends to visit an authorized Kia dealer/service partner.
- Keep the SRS parts and wirings away from water or any liquid. If the SRS components are inoperative due to exposure to water or liquids, it may cause fire or severe injury.

How does the air bag system operate

- Air bags are activated (able to inflate if necessary) only when the ignition switch is turned to the ON or START position.
- Air bags inflate instantly in the event of a serious frontal collision or side collision (if equipped with a side air bag or curtain air bag) in order to help protect the occupants from serious physical injury.
- In normal conditions, the airbag is designed to deploy based on certain angle and intensity of the collision. These two factors are crucial elements for deciding whether to transmit airbag deployment signal or start the electrical operation or not.
- The airbag will deploy based on angle and intensity of the collision. It will not deploy in every crash or collision situations
- The front air bags will completely inflate and deflate in an instant. It is virtually impossible for you to see the air bags inflate during an accident.
  It is much more likely that you will simply see the deflated air bags hanging out of their storage compartments after the collision.
- In order to help provide protection in a severe collision, the air bags must inflate rapidly. The speed of the air bag inflation is a consequence of extremely short time in which a collision occurs and the need to inflate the air bag between the occupant and the vehicle structures before the occupant impacts those structures.
  This speed of inflation reduces the risk of serious or life-threatening injuries in a severe collision and is thus a necessary part of the air bag design.
  However, air bag inflation can also

cause injuries which can include facial abrasions, bruises and bro ken bones because the inflation speed also causes the air bags to expand with a great deal of force.

- **There are even circumstances under which contact with the steering wheel air bag can cause fatal injuries, especially if the occupant is positioned excessively close to the steering wheel.**

⚠ WARNING

- To avoid severe personal injury or death caused by deploying air bags in a collision, the driver should sit as far back from the steering wheel air bag as possible (at least 250 mm (10 inches) away). The front passengers should always move their seats as far back as possible and sit back in their seat.
- Air bags inflate instantly in the event of a collision, and passengers may be injured by the air bag expansion force if they are not in a proper position.
- Air bag inflation may cause injuries including facial or bodily abrasions, injuries from broken glasses or burns.

Noise and smoke

When the air bags inflate, they make a loud noise and they leave smoke and powder in the air inside of the vehicle. This is normal and is a result of the ignition of the air bag inflator. After the air bag inflates, you may feel substantial discomfort in breathing due to the contact of your chest with both the seat belt and the air bag, as well as from breathing the smoke and powder. **Open your doors and/or windows as soon as possible after impact in order to reduce discomfort and prevent prolonged exposure to the smoke and powder.**

Though the smoke and powder are non-toxic, they may cause irritation to the skin (eyes, nose and throat, etc). If this is the case, wash and rinse with cold water immediately and consult a doctor if the symptom persists.

⚠ WARNING

When the air bags deploy, the air bag related parts in the steering wheel and/or instrument panel and/or in both sides of the roof rails above the front and rear doors are very hot. To prevent injury, do not touch the air bag storage area's internal components immediately after an air bag has inflated.

Do not install or place any accessories near air bag deployment areas, such as the instrument panel, windows, pillars, and roof rails.

Front passenger's air bag warning label for child restraint system



OYDESA2042

Never place a rear-facing child restraint in the front passenger's seat. If the air bag deploys, it would impact the rear-facing child restraint, causing serious or fatal injury.

In addition, do not place a front-facing child restraints in the front passenger's seat. If the front passenger air bag inflates, it could cause serious or fatal injuries to the child.

If your vehicle is equipped with the passenger's front air bag ON/OFF switch, you can activate or deactivate the front passenger's air bag when necessary.

⚠ WARNING

- Extreme Hazard! Do not use a rearward facing child restraint on a seat protected by an air bag in front of it!
- NEVER use a rearward facing child restraint on a seat protected by an ACTIVE AIRBAG in front of it. DEATH or SERIOUS INJURY to the CHILD can occur.
- Never put a child restraint in the front passenger's seat. If the front passenger air bag inflates, it can cause serious or fatal injuries.
- When children are seated in the rear outboard seats of a vehicle equipped with side and/or curtain air bags, be sure to install the child restraint system as far away from the door side as possible, and securely lock the child restraint system in position. Inflation of side and/or curtain air bags could cause serious injury or death to an infant or child.

Air bag warning light


ODEEV068100NR

The purpose of the air bag warning light in your instrument panel is to alert you of a potential problem with your air bag – Supplemental Restraint System (SRS).

When the ignition switch is turned ON, the warning light should illuminate for approximately 6 seconds, then go off.

Have the system checked if:

- The light does not turn on briefly when you turn the ignition ON.

- The light stays on after illuminating for approximately 6 seconds.
- The light comes on while the vehicle is in motion.
- The light blinks when the ignition switch is in ON position.

Passenger's front air bag ON indicator (if equipped)



OYB030076L

The passenger's front air bag ON indicator illuminates for approximately 4 seconds after the ignition switch is turned to the ON position.

The passenger's front air bag ON indicator also comes on when the passenger's front air bag ON/OFF switch is set to the ON position and goes off after approximately 60 seconds.

Passenger's front air bag OFF indicator (if equipped)



OYB030077L

The passenger's front air bag OFF indicator illuminates for about 4 seconds after the ignition switch is turned to the ON position.

The passenger's front air bag OFF indicator also comes on when the passenger's front air bag ON/OFF switch is set to the OFF position and goes off when the passenger's front air bag ON/OFF switch is set to the ON position.

⚠ CAUTION

If the passenger's front air bag ON/OFF switch malfunctions, the passenger's front air bag OFF indicator will not illuminate (The passenger's front air bag ON indicator comes on and goes off after approximately 60 seconds) and the passenger's front air bag will inflate in a frontal impact even if the passenger's front air bag ON/OFF switch is set to the OFF position.

In this case, have the passenger's front air bag ON/OFF switch and the SRS air bag system inspected by a professional workshop.

Kia recommends to visit an authorized Kia dealer/service partner.

SRS components and functions

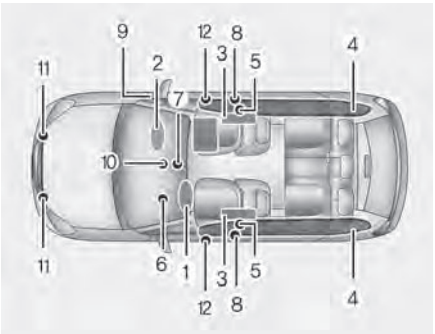

0YB030078L

The SRS consists of the following components:

1. Driver's front air bag module
2. Passenger's front air bag module
3. Side air bag modules
4. Curtain air bag modules
5. Retractor pre-tensioner assemblies*
6. Air bag warning light
7. SRS control module (SRSCM)
8. Side impact sensors
9. Passenger's front air bag ON/OFF switch*
10. Passenger's front air bag ON/OFF indicator*
11. Front impact sensor
12. Side Pressure sensor

* : if equipped

The SRSCM continually monitors all SRS components while the ignition switch is ON to determine if a crash impact is severe enough to require air bag deployment or pre-tensioner seat belt deployment.

The SRS air bag warning light "" on the instrument panel will illuminate for about 6 seconds after the ignition switch is turned to the ON position, after which the SRS air bag warning light "" should go out.

⚠ WARNING

If any of the following conditions occurs, this indicates a malfunction of the SRS. In this case, have the system inspected by a professional workshop. Kia recommends to visit an authorized Kia dealer/service partner.

- The light does not turn on briefly when you turn the ignition ON.
- The light stays on after illuminating for approximately 6 seconds.
- The light comes on while the vehicle is in motion.
- The light blinks when the ignition switch is in ON position.

Driver's front air bag (1)



ODEEV058048NR

The air bag modules are located both in the center of the steering wheel and in the front passenger's panel above the glove box. When the SRSCM detects a sufficiently severe impact to the front of the vehicle, it will automatically deploy the front air bags.

Driver's front air bag (2)



ODEEV058049NR

Upon deployment, tear seams molded directly into the pad covers will separate under pressure from the expansion of the air bags. Further opening of the covers then allows full inflation of the air bags.

Driver's front air bag (3)



ODEEV058050NR

A fully inflated air bag, in combination with a properly worn seat belt, slows the driver's or the passenger's forward motion, reducing the risk of head and chest injury.

After complete inflation, the air bag immediately starts deflating, enabling the driver to maintain forward visibility and the ability to steer or operate other controls.

Passenger's front air bag



ODEEV058051NR

⚠ WARNING

- Do not install or place any accessories (drink holder, sticker, etc.) on the front passenger's panel above the glove box in a vehicle with a passenger's air bag. Such objects may become dangerous projectiles and cause injury if the passenger's air bag inflates.
- When installing a container of liquid air freshener inside the vehicle, do not place it near the instrument cluster nor on the instrument panel surface. It may become a dangerous projectile and cause injury if the passenger's air bag inflates.

⚠ WARNING

- If an air bag deploys, there may be a loud noise followed by a fine dust released in the vehicle. These conditions are normal and are not hazardous – the air bags are packed in this fine powder. The dust generated during air bag deployment may cause skin or eye irritation as well as aggravate asthma for some persons. Always wash all exposed skin areas thoroughly with cold water and a mild soap after an accident in which the air bags were deployed.
- The SRS can function only when the ignition switch is in the ON position. If the SRS "SRS" warning light does not illuminate, or continuously remains on after illuminating for about 6 seconds when the ignition switch is turned to the ON position, or after the engine is started, comes on while driving, the SRS is not working properly. In this case, have the system inspected by a professional workshop. Kia recommends to visit an authorized Kia dealer/service partner.
- Before you replace a fuse or disconnect a battery terminal, turn the ignition switch to the LOCK position and remove the ignition key. Never remove or replace the air bag related fuse (s) when the ignition switch is in the ON position. Failure to heed this warning will cause the SRS "SRS" warning light to illuminate.

Driver's and passenger's front air bag

Driver's front air bag



OYB030038L

Passenger's front air bag



Your vehicle is equipped with a Supplemental Restraint (Air Bag) System and lap/shoulder belts at both the driver and passenger seating positions.

The indications of the system's presence are the letters "AIRBAG" engraved on the air bag pad cover in the steering wheel and the passenger's side front panel pad above the glove box.

The SRS consists of air bags installed under the pad covers in the center of the steering wheel and the passenger's side front panel above the glove box.

The purpose of the SRS is to provide the vehicle's driver and/or the front passenger with additional protection than that offered by the seat belt system alone in case of a frontal impact of sufficient severity.

⚠ WARNING

The driver's hands should be placed on the steering wheel at the 9:00 and 3:00 positions. The passenger's arms and hands should be placed on their laps.

⚠ WARNING

Always use seat belts and child restraints – every trip, every time, everyone! Air bags inflate with considerable force and in the blink of an eye. Seat belts help keep occupants in proper position to obtain maximum benefit from the air bag. Even with air bags, improperly belted and unbelted occupants can be severely injured when the air bag inflates. Always follow the precautions about seat belts, air bags and occupant safety contained in this manual.

To reduce the chance of serious or fatal injuries and receive the maximum safety benefit from your restraint system:

- Never place a child in any child or booster seat in the front seat.
- ABC – Always Buckle Children in the back seat. It is the safest place for children of any age to ride.
- Front and side air bags can injure occupants improperly positioned in the front seats.
- Move your seat as far back as practical from the front air bags,

while still maintaining control of the vehicle.
- You and your passengers should never sit or lean unnecessarily close to the air bags. Improperly positioned drivers and passengers can be severely injured by inflating air bags.
- Never lean against the door or center console – always sit in an upright position.
- Do not allow a passenger to ride in the front seat when the passenger's front air bag OFF indicator is illuminated, because the air bag will not deploy in the event of a moderate or severe frontal crash.
- No objects should be placed over or near the air bag modules on the steering wheel, instrument panel and the front passenger's panel above the glove box, because any such object could cause harm if the vehicle is in a crash severe enough to cause the air bags to deploy.
- Do not tamper with or disconnect SRS wiring or other components of the SRS system. Doing so could result in injury, due to accidental deployment of the air bags or by rendering the SRS inoperative.
- If the SRS air bag warning light remains illuminated while the vehicle is being driven, have the system inspected by a professional workshop. Kia recommends to visit an authorized Kia dealer/service partner.
- Air bags can only be used once – have the system replaced by a professional workshop. Kia recommends to visit an authorized Kia dealer/service partner.
- The SRS is designed to deploy the front air bags only when an impact is sufficiently severe and when the impact angle is less than 30° from the forward longitudinal axis of the vehicle. Additionally, the air bags will only deploy once. Seat belts must be worn at all times.
- Front air bags are not intended to deploy in side-impact, rear-impact or rollover crashes. In addition, front air bags will not deploy in frontal crashes below the deployment threshold.
- A child restraint system must never be placed in the front seat. The infant or child could be severely injured or killed by an air bag deployment in case of an accident.
- Children age 13 and under must always be properly restrained in the rear seat. Never allow children to ride in the front passenger seat. If a child over 13 must be seated in the front seat, he or she must be properly belted and the seat should be moved as far back as possible.

- For maximum safety protection in all types of crashes, all occupants including the driver should always wear their seat belts whether or not an air bag is also provided at their seating position to minimize the risk of severe injury or death in the event of a crash. Do not sit or lean unnecessarily close to the air bag while the vehicle is in motion.
- Sitting improperly or out of position can result in serious or fatal injury in a crash. All occupants should sit upright with the seat back in an upright position, centered on the seat cushion with their seat belt on, legs comfortably extended and their feet on the floor until the vehicle is parked and the ignition key is removed.
- The SRS air bag system must deploy very rapidly to provide protection in a crash. If an occupant is out of position because of not wearing a seat belt, the air bag may forcefully contact the occupant causing serious or fatal injuries.

Passenger's front air bag ON/OFF switch (if equipped)



OYB030030L

The passenger's front air bag can be deactivated by the passenger's front air bag ON/OFF switch if a child restraint is installed on the front passenger's seat or if the front passenger's seat is unoccupied by a person.

To ensure the safety of your child, the passenger's front air bag must be deactivated when it should be necessary to install a rearward facing child seat on the front passenger seat in exceptional circumstances.

To deactivate or reactivate the passenger's front air bag:

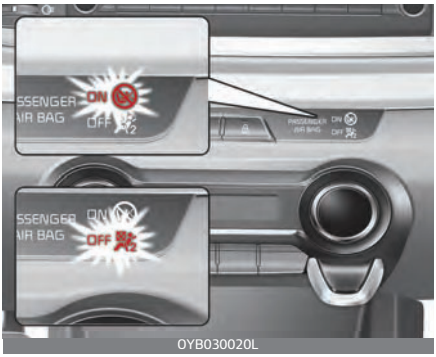

OYB030020L

To deactivate the passenger's front air bag, insert the master key into the passenger's front air bag ON/OFF switch and turn it to the OFF position. The passenger's front air bag OFF indicator ( ) will illuminate and stay on until the passenger's front air bag is reactivated.

To reactivate the passenger's front air bag, insert the master key into the passenger's front air bag ON/OFF switch and turn it to the ON position.

The passenger's front air bag OFF indicator will go out and the passenger's front air bag ON indicator ( ) will illuminate for approximately 60 seconds.

⚠ WARNING

The front air bag ON/OFF switch could turn by using a similar small rigid device. Always check the status of the front air bag ON/OFF switch and passenger's front air bag ON/OFF indicator.

✻ NOTICE

- When the passenger's front air bag ON/OFF switch is set to the ON position, the passenger's front air bag is activated and child or infant seat should not be installed on the front passenger seat.
- When the passenger's front air bag ON/OFF switch is set to the OFF position, the passenger's front air bag is deactivated.

⚠ CAUTION

- If the passenger's front air bag ON/OFF switch is not working properly, the air bag warning light ( )on the instrument panel will illuminate.
  And, the passenger's front air bag OFF indicator ( ) will not illuminate (The passenger's front air bag ON indicator comes on and goes off after approximately 60 seconds), the SRS Control Module reactivate the passenger's front air bag and the passenger's front air bag will inflate in frontal impact crashes even if the passenger's front air bag ON/OFF switch is set to the OFF position.

In this case, have the system inspected by a professional workshop. Kia recommends to visit an authorized Kia dealer/service partner.
- If the SRS air bag warning light blinks or does not illuminate when the ignition switch is turned to the ON position, or if it illuminates while the vehicle is being driven, have the system inspected by a professional workshop. Kia recommends to visit an authorized Kia dealer/service partner.

⚠ WARNING

- The driver is responsible for the proper position of the passenger's front air bag ON/OFF switch.
- Deactivate the passenger's front air bag only when the ignition switch is switched off, or the malfunction may occur in the SRS Control Module.
  And there may be a danger that the driver's and/or front passenger's and/or side and curtain air bag may fail to trigger, or not trigger correctly during a collision.
- Never install a rearward facing child seat on the front passenger's seat unless the passenger's front air bag has been deactivated.The infant or child could be severely injured or killed by an air bag deployment in case of an accident.
- Even though your vehicle is equipped with the passenger's front air bag ON/OFF switch, do not install a child restraint system in the front passenger's seat. A child restraint system must never be placed in the front seat. Children who are too large for child restraint systems should always occupy the rear seat and use the available lap/shoulder belts. Children are afforded the most safety in the event of an accident when they are restrained by a proper restraint system in the rear seat.
- As soon as the child seat is no longer needed on the front passenger's seat, reactivate the front passenger's air bag.
- Never place or insert any object into any small opening near side airbag labels attached to the vehicle seats. When the air bag deploys, the object may affect the deployment and result in unexpected accident or bodily harm.

⚠ WARNING

No attaching objects

No objects (such as crash pad cover, cellular phone holder, cup holder, perfume or stickers) should be placed over or near the air bag modules on the steering wheel, instru-

ment panel, windshield glass, and the front passenger's panel above the glove box. Such objects could cause harm if the vehicle is in a crash severe enough to cause the air bags to deploy. Do not place any objects over the air bag or between the air bag and yourself.

Side air bag

Front



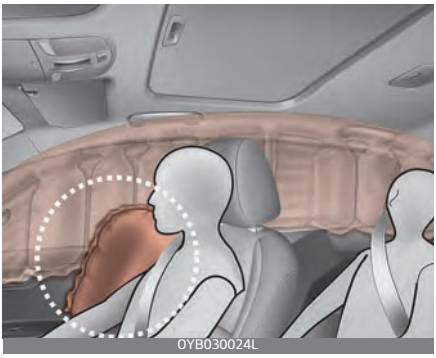

Your vehicle is equipped with a side impact air bag in each front seat. The purpose of the air bag is to provide the vehicle's driver and the front passenger with additional protection than that offered by the seat belt alone.

The side air bags are designed to deploy only during certain sideimpact collisions, depending on the crash severity, angle, speed and point of impact. The side impact air bags are not designed to deploy in all side impact situations.

⚠ WARNING

Do not allow the passengers to lean their heads or bodies onto doors, put their arms on the doors, stretch their arms out of the window, or place objects between the doors and passengers when they are seated on seats equipped with side and/or curtain air bags.

⚠ WARNING

- The side air bag is supplemental to the seat belt systems and is not a substitute for them. Therefore your seat belts must be worn at all times while the vehicle is in motion. The air bags deploy only in certain side impact conditions severe enough to cause significant injury to the vehicle occupants.
- For best protection from the side air bag system and to avoid being injured by the deploying side air bag, both front and all rear (if

equipped) seat occupants should sit in an upright position with the seat belt properly fastened.
- Do not use any accessory seat covers.
- Use of seat covers could reduce or prevent the effectiveness of the system.
- To prevent unexpected deployment of the side air bag that may result in personal injury, avoid impact to the side impact sensor when the ignition switch is on.
- If the seat or seat cover is damaged, have the system serviced by a professional workshop. Kia recommends to visit an authorized Kia dealer/service partner.

⚠ WARNING

No attaching objects

- Do not place any objects over the air bag or between the air bag and yourself. Also, do not attach any objects around the area the air bag inflates such as the door, side door glass, front and rear pillar.
- Do not place any objects between the door and the seat. They may become dangerous projectiles if the side air bag inflates.
- Do not install any accessories on the side or near the side air bags.
- Do not hang heavy items on the coat hooks for safety reasons.

Curtain air bag


OYB030026L

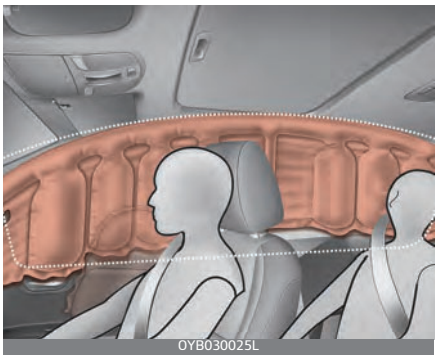
OYB030025L

Curtain air bags are located along both sides of the roof rails above the center pillar.

They are designed to help protect the heads of the front seat occupants and the rear outboard seat occupants in certain side impact collisions.

The curtain air bags are designed to deploy only during certain side impact collisions, depending on the crash severity, angle, speed and impact. The curtain air bags are not designed to deploy in all side impact situations, collisions from the front

or rear of the vehicle or in most roll-over situations.

⚠ WARNING

- In order for side and curtain air bags to provide their best protection, front seat occupants and outboard rear occupants should sit in an upright position with the seat belts properly fastened. Importantly, children should sit in a proper child restraint system in the rear seat.
- When children are seated in the rear outboard seats, they must be seated in the proper child restraint system. Make sure to position the child restraint system as far away from the door side as possible, and secure the child restraint system in a locked position.
- Do not allow the passengers to lean their heads or bodies onto doors, put their arms on the doors, stretch their arms out of the window, or place objects between the doors and passengers when they are seated on seats equipped with side and/or curtain air bags.
- Never try to open or repair any components of the side curtain air bag system. If necessary, have the system serviced by a professional workshop. Kia recommends to visit an authorized Kia dealer/service partner.

Failure to follow the above instructions can result in injury or death to the vehicle occupants in an accident.

⚠ WARNING

No attaching objects

- Do not place any objects over the air bag. Also, do not attach any objects around the area the air bag inflates such as the door, side door glass, front and rear pillar, roof side rail.
- Do not hang hard or breakable objects on the clothes hanger.

Why didn't my air bag go off in a collision? (Inflation and non-inflation conditions of the air bag)

There are many types of accidents in which the air bag would not be expected to provide additional protection.

These include rear impacts, second or third collisions in multiple impact accidents, as well as low speed impacts.

Air bag collision sensors



OST030031L

1



OYB030032L

2



OST030035L

3



OYB030033L

4



OST030034L

* The actual air bag collision sensors in the vehicle may differ from the illustration.

1. SRS control module
2. Front impact sensor
3. Side Pressure sensor
4. Side impact sensor

⚠ WARNING

- Do not hit or allow any objects to impact the locations where air bags or sensors are installed. This may cause unexpected air bag deployment, which could result in serious personal injury or death.
- If the installation location or angle of the sensors is altered in any way, the air bags may deploy when they should not or they may not deploy when they should, causing severe injury or death.
  Therefore, do not try to perform maintenance on or around the air bag sensors. Have the system serviced by a professional workshop. Kia recommends to visit an authorized Kia dealer/service partner.
- Problems may arise if the sensor installation angles are changed due to the deformation of the front bumper, body or B pillars where side collision sensors are installed. In this case, have the system serviced by a professional workshop. Kia recommends to visit an authorized Kia dealer/service partner.
- Your vehicle has been designed to absorb impact and deploy the air bag(s) in certain collisions. Installing bumper guards or replacing a bumper with non-genuine parts may adversely affect your vehicle's collision and air bag deployment performance.

Air bag inflation conditions

Front air bags


OST030094L

Front air bags are designed to inflate in a frontal collision depending on the intensity, speed or angles of impact of the front collision.

Side and curtain air bags (if equipped)


OST030095L

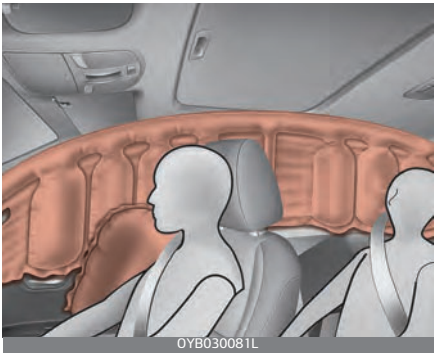
OYB030081L

Side and curtain air bags are designed to inflate when an impact is detected by side collision sensors depending on the strength, speed or angles of impact resulting from a side impact collision.

Although the front air bags (driver's and front passenger's air bags) are designed to inflate only in frontal collisions, they also may inflate in other types of collisions if the front impact sensors detect a sufficient impact. Side and curtain air bags are designed to inflate only in side impact collisions, but they may inflate in other collisions if the side impact sensors detect a sufficient impact.

If the vehicle chassis is impacted by bumps or objects on unimproved roads, the air bags may deploy. Drive carefully on unimproved roads or on surfaces not designed for vehicle traffic to prevent unintended air bag deployment.

Air bag non-inflation conditions

- In certain low-speed collisions the air bags may not deploy. The air bags are designed not to deploy in such cases because they may not provide benefits beyond the protection of the seat belts in such collisions.


OST030096L

- Frontal air bags are not designed to inflate in rear collisions, because occupants are moved backward by the force of the impact. In this case, inflated air bags would not be able to provide any additional benefit.

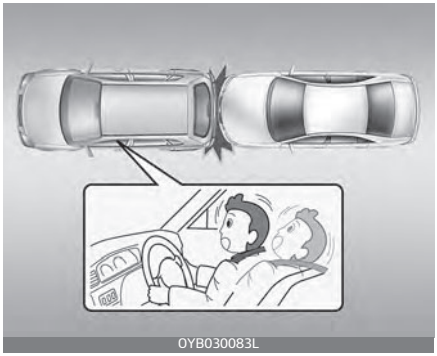
OYB030083L

- Front air bags may not inflate in side impact collisions, because occupants move to the direction of the collision, and thus in side impacts, frontal air bag deployment would not provide additional occupant protection.
  However, side and curtain air bags may inflate depending on the intensity, vehicle speed and angles of impact.


OST030095L

- In an angled collision, the force of impact may direct the occupants in a direction where the air bags would not be able to provide any additional benefit, and thus the sensors may not deploy any air bags.

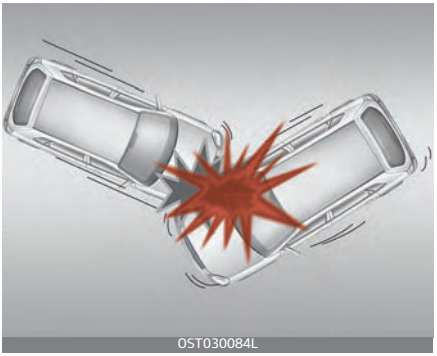
OST030084L

- Just before impact, drivers often brake heavily. Such heavy braking lowers the front portion of the vehicle causing it to “ride” under a vehicle with a higher ground clearance. Air bags may not inflate in this "under-ride" situation because deceleration forces that are detected by sensors may be significantly reduced by such “under-ride” collisions.

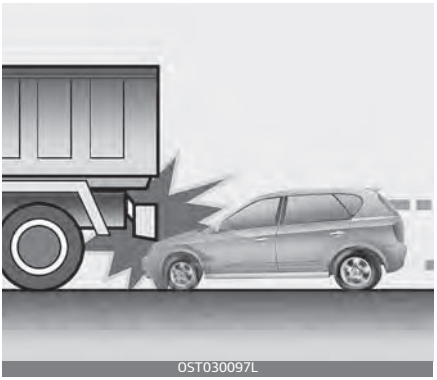
OST030097L

- Air bags do not inflate in most rollover accidents, even though the vehicle is equipped with side air bags and curtain air bags.

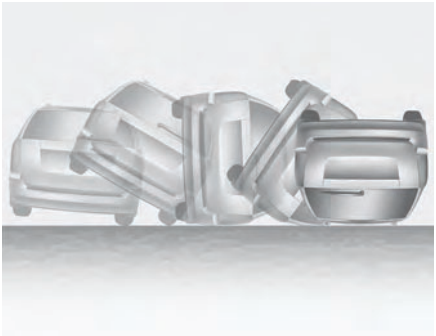
OST030087L

NOTICE

However, side and/or curtain air bags may inflate when the vehicle is rolled over by a side impact collision, if the vehicle is equipped with side air bags and curtain air bags.

- Air bags may not inflate if the vehicle collides with objects such as utility poles or trees, where the point of impact is concentrated to one area and the full force of the impact is not delivered to the sensors.


OST030098L

SRS Care

The SRS is virtually maintenance-free and so there are no parts you can safely service by yourself. If the SRS air bag warning light does not illuminate, or continuously remains on, have the system inspected by a professional workshop.

Kia recommends to visit an authorized Kia dealer/service partner.

WARNING

- Modification to SRS components or wiring, including the addition of any kind of badges to the pad covers or modifications to the body structure, can adversely affect SRS performance and lead to possible injury.
- For cleaning the air bag pad covers, use only a soft, dry cloth or one which has been moistened with plain water. Solvents or cleaners could adversely affect the air bag covers and proper deployment of the system.
- No objects should be placed over or near the air bag modules on the steering wheel, instrument panel, and the front passenger's panel above the glove box, because any such object could cause harm if the vehicle is in a crash severe enough to cause the air bags to inflate.

- If the air bags inflate, have the system replaced by a professional workshop.
  Kia recommends to visit an authorized Kia dealer/service partner.
- Do not tamper with or disconnect SRS wiring, or other components of the SRS system. Doing so could result in injury, due to accidental inflation of the air bags or by rendering the SRS inoperative.
- If components of the air bag system must be discarded, or if the vehicle must be scrapped, certain safety precautions must be observed. An authorized Kia dealer knows these precautions and can give you the necessary information. Failure to follow these precautions and procedures could increase the risk of personal injury.
- If your car was flooded and has soaked carpeting or water on flooring, you shouldn't try to start the engine; in this case, have your vehicle inspected by a professional workshop. Kia recommends to contact an authorized Kia dealer/service partner.

Additional safety precautions

- **Never let passengers ride in the cargo area or on top of a folded-down back seat.** All occupants should sit upright, fully back in their seats with their seat belts on and their feet on the floor.
- **Passengers should not move out of or change seats while the vehicle is moving.** A passenger who is not wearing a seat belt during a crash or emergency stop can be thrown against the inside of the vehicle, against other occupants, or out of the vehicle.
- **Each seat belt is designed to restrain one occupant.** If more than one person uses the same seat belt, they could be seriously injured or killed in a collision.
- **Do not use any accessories on seat belts.** Devices claiming to improve occupant comfort or reposition the seat belt can reduce the protection provided by the seat belt and increase the chance of serious injury in a crash.
- **Passengers should not place hard or sharp objects between themselves and the air bags.** Carrying hard or sharp objects on your lap or in your mouth can result in injuries if an air bag inflates.
- **Keep occupants away from the air bag covers.** All occupants should sit upright, fully back in their seats with their seat belts on and their feet on the floor. If occupants are too close to the air bag covers, they could be injured if the air bags inflate.

- **Do not attach or place objects on or near the air bag covers.** Any object attached to or placed on the front or side air bag covers could interfere with the proper operation of the air bags.
- **Do not modify the front seats.** Modification of the front seats could interfere with the operation of the supplemental restraint system sensing components or side air bags.
- **Do not place items under the front seats.** Placing items under the front seats could interfere with the operation of the supplemental restraint system sensing components and wiring harnesses.
- **Never hold an infant or child on your lap.** The infant or child could be seriously injured or killed in the event of a crash. All infants and children should be properly restrained in appropriate child safety seats or seat belts in the rear seat.

⚠ WARNING

- Sitting improperly or out of position can cause occupants to be shifted too close to a deploying air bag, strike the interior structure or be thrown from the vehicle resulting in serious injury or death.
- Always sit with the seatback in an upright position, centered on the seat cushion with your seat belt on, legs comfortably extended and your feet on the floor.

Adding equipment to or modifying your air bag-equipped vehicle

If you modify your vehicle by changing your vehicle's frame, bumper system, front end or side sheet metal or ride height, this may affect the operation of your vehicle's air bag system.

Air bag warning label



Air bag warning labels are attached to alert the driver and passengers of potential risk of air bag system.

Note that these government warnings focus on the risk of children. We also want you to be aware of the risks which adults are exposed to. Those have been described in previous pages.

Features of your vehicle 4

Keys 4–7

• Record your key number 4–7
• Key operations 4–7
• Immobilizer system 4–8

Remote keyless entry 4–10

• Remote keyless entry system operations 4–10
• Transmitter precautions 4–11
• Battery replacement 4–12

Smart key 4–14

• Smart key functions 4–14
• Smart key precautions 4–15

Theft-alarm system 4–16

• Armed stage 4–17
• Theft-alarm stage 4–18
• Disarmed stage 4–18

Door locks 4–19

• Operating door locks from outside the vehicle 4–19
• Operating door locks from inside the vehicle 4–21
• Impact sensing door unlock system 4–23
• Speed sensing door lock system 4–23
• Child-protector rear door lock 4–23
• Rear Occupant Alert (ROA) system 4–24

Tailgate 4–25

• Opening the tailgate 4–25
• Closing the tailgate 4–25
• Emergency tailgate safety release 4–26

Windows 4–28

• Power windows 4–29

4 Features of your vehicle

• Manual windows 4-32
Hood 4-33
• Opening the hood 4-33
• Hood open warning 4-34
• Closing the hood 4-34
Fuel filler door 4-35
• Opening the fuel filler door 4-35
• Closing the fuel filler door 4-35
Sunroof 4-38
• Sliding the sunroof 4-39
• Tilting the sunroof 4-40
• Sunshade 4-41
• Resetting the sunroof 4-41
Steering wheel 4-42
• Electric power steering 4-42
• Tilt & telescopic steering 4-43
• Heated steering wheel 4-44
• Horn 4-44
Mirrors 4-45
• Inside rearview mirror 4-45
• Outside rearview mirror 4-47
Instrument cluster 4-50
• Instrument cluster control 4-51
• LCD display control 4-51
• Gauges 4-52
• Transmission shift indicator 4-57
Trip Computer 4-60
• Trip information (Trip computer) (For Type A cluster) 4-60
• Trip information (trip computer) (For Type B cluster) 4-64

Features of your vehicle 4

LCD display (for Type B cluster) 4-68
- LCD display modes 4-68
- Warning messages (for Type B cluster) 4-77

Warning and indicator lights 4-82
- Warning lights 4-82
- Indicator lights 4-90

Rear View Monitor (RVM) 4-94

Reverse Parking Distance Warning (PDW) 4-95
- Operation of Reverse Parking Distance Warning 4-95
- Non-operational conditions of Reverse Parking Distance Warning 4-96
- Reverse Parking Distance Warning precautions 4-97
- Self-diagnosis 4-97

Forward/Reverse Parking Distance Warning (PDW) 4-98
- Operation of Forward/Reverse Parking Distance Warning 4-99
- Non-operational conditions of Forward/Reverse Parking Distance Warning 4-102
- Self-diagnosis 4-103

Lighting 4-104
- Battery saver function 4-104
- Headlight escort function 4-104
- Headlight welcome function 4-104
- Static bending light 4-105
- Daytime running light 4-105
- Lighting control 4-105
- High beam operation 4-107
- High Beam Assist (HBA) 4-107
- Turn signals and lane change signals 4-109

4 Features of your vehicle

• Front fog light 4-110
• Rear fog light 4-110
• Headlight leveling device 4-111
Wipers and washers 4-112
• Windshield wipers (front) 4-112
• Windshield washers (front) 4-114
• Rear window wiper and washer switch 4-115
Interior light 4-116
• Map lamp 4-116
• Room lamp 4-117
• Luggage room lamp 4-117
• Vanity mirror lamp 4-117
• Glove box lamp 4-118
Defroster 4-118
• Rear window defroster 4-118
Manual climate control system 4-120
• Heating and air conditioning 4-121
• System operation 4-125
• Activate upon Washer Fluid Use 4-127
• Climate control air filter 4-128
• Air Conditioning refrigerant label 4-128
• Checking the amount of air conditioner refrigerant and compressor lubricant 4-129
• Sunroof inside air recirculation 4-130
Automatic climate control system 4-131
• Automatic heating and air conditioning 4-131
• Manual heating and air conditioning 4-132
• System operation 4-137
• Activate upon Washer Fluid Use 4-139

Features of your vehicle 4

• Climate control air filter 4-139
• Air Conditioning refrigerant label 4-140
• Checking the amount of air conditioner refrigerant and compressor lubricant 4-141
• Sunroof inside air recirculation 4-142
Windshield defrosting and defogging 4-142
• Manual climate control system 4-143
• Automatic climate control system 4-143
• Defogging logic 4-144
Storage compartments 4-147
• Center console storage 4-147
• Glove box 4-147
• Sunglass holder 4-148
• Luggage net holder 4-148
• Luggage board 4-149
• Increase cargo space 4-149
Interior features 4-150
• Cigarette lighter 4-150
• Ashtray 4-151
• Cup holder 4-151
• Sun visor 4-152
• Seat warmer 4-152
• Power outlet 4-154
• USB charger 4-155
• Floor mat anchor(s) 4-155
• Covering shelf trim 4-156
• Shopping bag holder 4-157
• Coat hook 4-157
Exterior features 4-158

4 Features of your vehicle

• Roof rack 4-158
• Side seal molding 4-159
Infotainment system 4-160
• Antenna 4-160
• USB port 4-161
• How vehicle audio works 4-161

Features of your vehicle

Keys

Record your key number



The key code number is stamped on the key code tag attached to the key set. Should you lose your keys, Kia recommends to contact an authorized Kia dealer/service partner. Remove the key code tag and store it in a safe place. Also, record the key code number and keep it in a safe and handy place, but not in the vehicle.

Key operations

Folding key

Folding key

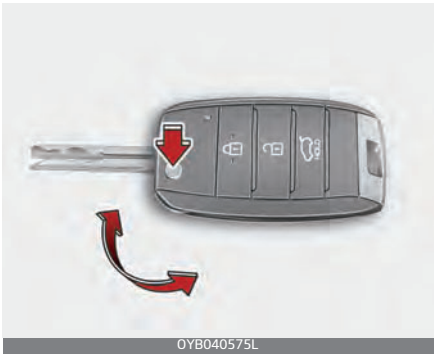

OYB040575L

To unfold the key, press the release button then the key will unfold automatically.

To fold the key, fold the key manually while pressing the release button.

⚠ CAUTION

Do not fold the key without pressing the release button. This may damage the key.

Smart key

Smart key



OYB040576L

To remove the mechanical key, press and hold the release button (1) and remove the mechanical key (2).

To reinstall the mechanical key, put the key into the hole and push it until a click sound is heard.

⚠ WARNING

Ignition key (Smart key)

Leaving children unattended in a vehicle with the ignition key (smart key) is dangerous even if the key is not in the ignition switch or start button is ACC or ON position.

Children copy adults and they could place the key in the ignition switch or press the start button. The ignition key (smart key) would enable children to operate power windows or other controls, or even make the vehicle move, which could result in serious bodily injury or even death. Never leave the keys in your vehicle with unsupervised children, when the engine is running.

⚠ WARNING

Kia recommends to use parts for replacement from an authorized Kia dealer/service partner. If an aftermarket key is used, the ignition switch may not return to ON after START. If this happens, the starter will continue to operate causing damage to the starter motor and possible fire due to excessive current in the wiring.

Immobilizer system

Your vehicle may be equipped with an electronic engine immobilizer system to reduce the risk of unauthorized vehicle use.

Your immobilizer system is comprised of a small transponder in the ignition key and electronic devices inside the vehicle.

Vehicles without smart key system

With the immobilizer system, whenever you insert your ignition key into the ignition switch and turn it to ON, it checks and determines and verifies if the ignition key is valid or not.

If the key is valid, the engine will start.

If the key is invalid, the engine will not start.

To deactivate the immobilizer system:
Insert the ignition key into the key cylinder and turn it to the ON position.

To activate the immobilizer system:
Turn the ignition key to the OFF position. The immobilizer system activates automatically. Without a valid ignition key for your vehicle, the engine will not start.

Vehicles with smart key system

Whenever the ENGINE START/STOP button is changed to the ON position, the immobilizer system checks and verifies if the key is valid or not.

If the key is valid, the engine will start.

If the key is invalid, the engine will not start.

To deactivate the immobilizer system :
Change the ENGINE START/STOP button to the ON position.

To activate the immobilizer system :
Change the ENGINE START/STOP button to the OFF position. The immobilizer system activates automatically. Without a valid smart key for your vehicle, the engine will not start.

⚠ WARNING

In order to prevent theft of your vehicle, do not leave spare keys anywhere in your vehicle. Your immobilizer password is a customer unique password and should be kept confidential. Do not leave this number anywhere in your vehicle.

✻ NOTICE

When starting the engine, do not use the key with other immobilizer keys around. Otherwise the engine may not start or may stop soon after it starts. Keep each key separate in order to avoid a starting malfunction.

⚠ CAUTION

Do not put metal accessories near the ignition switch. Metal accessories may interrupt the transponder signal and may prevent the engine from being started.

✻ NOTICE

If you need additional keys or lose your keys, Kia recommends to visit an authorized Kia dealer/service partner.

⚠ CAUTION

The transponder in your ignition key is an important part of the immobilizer system. It is designed to give years of trouble-free service, however you should avoid exposure to moisture, static electricity and rough handling. Immobilizer system malfunction could occur.

⚠ CAUTION

Do not change, alter or adjust the immobilizer system because it could cause the immobilizer system to malfunction. In this case, have the system serviced by a professional workshop. Kia recommends to visit an authorized Kia dealer/service partner.

Malfunctions caused by improper alterations, adjustments or modifications to the immobilizer system are not covered by your vehicle manufacturer warranty.

Remote keyless entry (if equipped)

Remote keyless entry system operations

Folding key



OUM046432L

Smart Key



OUM046433L

Lock (1)

All doors (and tailgate) are locked if the lock button is pressed while all doors are closed.

The hazard warning lights will blink once to indicate that all doors are locked.

However, if any door, engine hood or tailgate remains open, the hazard warning lights will not operate. If all doors, engine hood and tailgate are closed after the lock button is pressed, the hazard warning lights will blink once.

Unlock (2)

All doors (and tailgate) are unlocked if the unlock button is pressed.

The hazard warning lights will blink twice to indicate that all doors are unlocked.

After pressing this button, the doors will lock automatically unless you open any door within 30 seconds.

Tailgate unlock (3)

The tailgate is unlocked if the button is pressed for more than 1 second. The hazard warning lights will blink twice to indicate that the tailgate is unlocked.

However, after pressing this button, the tailgate will lock automatically unless you open the tailgate within 30 seconds.

Also, once the tailgate is opened and then closed, the tailgate will lock automatically.

With the tailgate locked and the smart key in your possession, press the tailgate open switch. Then, the tailgate will be opened.

* The word “HOLD” is written on the button to inform you that you must press and hold the button for 1 second.

Transmitter precautions

NOTICE

The transmitter will not work if any of the following occurs:

- The ignition key is in the ignition switch.
- You exceed the operating distance limit (about 10 m [30 feet]).
- The battery in the transmitter is weak.
- Other vehicles or objects may be blocking the signal.
- The weather is extremely cold.
- The transmitter is close to a radio transmitter such as a radio station or an airport which can interfere with normal operation of the transmitter.

When the transmitter does not work correctly, open and close the door with the ignition key. If you have a problem with the transmitter Kia recommends to contact an authorized Kia dealer/service partner.

- If the transmitter is in close proximity to your cell phone or smart phone, the signal from the trans-

mitter could be blocked by normal operation of your cell phone or smart phone. This is especially important when the phone is active such as making call, receiving calls, text messaging, and/or sending/ receiving emails.
Avoid placing the transmitter and your cell phone or smart phone in the same pants or jacket pocket and maintain adequate distance between the two devices.

⚠ CAUTION

- Keep the transmitter away from water or any liquid. If the keyless entry system is inoperative due to exposure to water or liquids, it will not be covered by your manufacturer vehicle warranty.
- Keep the transmitter away from electromagnetic materials that blocks electromagnetic waves to the key surface.

⚠ CAUTION

Changes or modifications not expressly approved by the party responsible for compliance could void the user's authority to operate the equipment. If the keyless entry system is inoperative due to changes or modifications not expressly approved by the party responsible for compliance, it will not be covered by your manufacturer's vehicle warranty.

Battery replacement

Folding key - Type A



OJA040473

Folding key - Type B



OJA040591

Smart Key



The transmitter uses a 3 volt lithium battery which will normally last for several years. When replacement is necessary, use the following procedure.

1. Insert a slim tool into the slot and gently pry open the transmitter center cover.
2. Using a slim tool, gently pry open the battery cover (for Folding key - Type B).
3. Replace the battery with a new battery (CR2032). When replacing the battery, make sure the battery position.
4. Install the battery in the reverse order of removal.

For transmitter replacement, Kia recommends to visit an authorized Kia dealer/service partner.

⚠ CAUTION

- The keyless entry system transmitter is designed to give you years of trouble-free use, however it can malfunction if exposed to moisture or static electricity. If you are unsure how to use or replace the battery, Kia recommends to contact an authorized Kia dealer/service partner.
- Using the wrong battery can cause the transmitter or smart key to malfunction. Be sure to use the correct battery.
- To avoid damaging the transmitter or smart key, don't drop it, get it wet, or expose it to heat or sunlight.

⚠ CAUTION

An inappropriately disposed battery can be harmful to the environment and human health. Dispose the battery according to your local law(s) or regulation.

Smart key (if equipped)



OXM043002

With a smart key, you can lock or unlock a door (and tailgate) and even start the engine without inserting the key.

The functions of buttons on a smart key are similar to the folding key.

Smart key functions



OYB040010L

Carrying the smart key, you may lock and unlock the vehicle doors (and tailgate). Also, you may start the engine. Refer to the following, for more details.

Locking

Pressing the button of the front outside door handles with all doors (and tailgate) closed and any door unlocked, locks all the doors (and tailgate). If all doors (and tailgate) and engine hood are closed, the hazard warning lights will blink once to indicate that all doors (and tailgate) are locked.

The button will only operate when the smart key is within 0.7~1 m (28~40 in.) from the outside door handle. If you want to make sure that a door has locked or not, you should check the door lock button inside the vehicle or pull the outside door handle.

Even though you press the outside door handle buttons, the doors will not lock if any of following occur:

- The smart key is in the vehicle.
- The ENGINE START/STOP button is in the ACC or ON position.
- Any door except the tailgate is open.

Unlocking

Pressing the button of the front outside door handles with all doors (and tailgate) closed and locked, unlocks all the doors (and tailgate). The hazard warning lights blink twice to indicate that all doors (and tailgate) are unlocked.

The button will only operate when the smart key is within 0.7~1 m (28~40 in.) from the outside door handle.

When the smart key is recognized in the area of 0.7~1 m (28~40 in.) from the front outside door handle, other people can also open the door without possession of the smart key.

After pressing the button, the doors will lock automatically unless you open any door within 30 seconds.

Tailgate unlocking

If you are within 0.7 m ~ 1 m (28 ~ 40 in.) from the outside tailgate handle, with your smart key in possession, the tailgate will unlock and open when you press the tailgate handle switch.

The hazard warning lights will blink twice to indicate that the tailgate is unlocked.

Also, once the tailgate is opened and then closed, the tailgate will lock automatically.

Start-up

You can start the engine without inserting the key. For detailed information refer to "ENGINE START/ STOP button (if equipped)" on page 5-12.

Smart key precautions

✻ NOTICE

- If, for some reason, you happen to lose your smart key, you will not be able to start the engine. Tow the vehicle, if necessary, contact a professional workshop. Kia recommends to contact an authorized Kia dealer/service partner.
- A maximum of 2 smart keys can be registered to a single vehicle. If you lose a smart key, Kia recommends to contact an authorized Kia dealer/service partner.
- The smart key will not work if any of the following occurs:
  - The smart key is close to a radio transmitter such as a radio station or an airport which can interfere with normal operation of the smart key.
  - The smart key is near a mobile two-way radio system or a cellular phone.
  - Another vehicle's smart key is being operated close to your vehicle.

  When the smart key does not work properly, open and close the door with the mechanical key. If you have a problem with the smart key, Kia recommends to contact an authorized Kia dealer/service partner.
- If the smart key is in close proximity to your cell phone or smart

phone, the signal from the smart key could be blocked by normal operation of your cell phone or smart phone. This is especially important when the phone is active such as making call, receiving calls, text messaging, and/or sending/receiving emails. Avoid placing the smart key and your cell phone or smart phone in the same pants or jacket pocket and maintain adequate distance between the two devices.

⚠ CAUTION

Keep the smart key away from water or any liquid. If the keyless entry system is inoperative due to exposure to water or liquids, it will not be covered by your manufacturer's vehicle warranty.

Theft-alarm system (if equipped)



Vehicles equipped with a theft alarm system will have a label attached to the vehicle with the following words:
1. WARNING
2. SECURITY SYSTEM

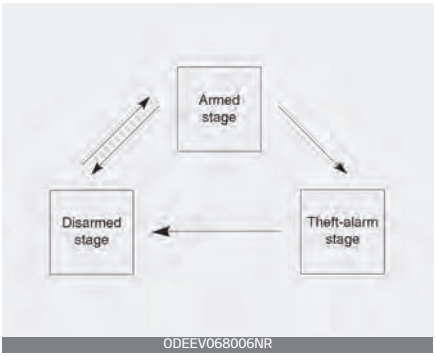

This system is designed to provide protection from unauthorized entry into the car. This system is operated in three stages: the first is the "Armed" stage, the second is the "Theft-alarm" stage, and the third is the "Disarmed" stage. If triggered, the system provides an audible

alarm with blinking of the hazard warning lights.

Armed stage

Using the smart key

Park the vehicle and stop the engine. Arm the system as described below.

1. Turn off the engine.
2. Make sure that all doors (and tailgate) and the engine hood are closed and latched.
3. Do one of following:
   - Lock the doors by pressing the button of the front outside door handle with the smart key in your possession.
     After completion of the steps above, the hazard warning lights operate once to indicate that the system is armed.
     If any door remains open, the doors won't lock and the chime will sound for 3 seconds. Close the door and try again to lock the doors.
     If tailgate or engine hood remains open, the hazard warning lights won't operate and theft-alarm will not arm. After this, if the tailgate and engine hood are closed, the hazard warning lights will blink once.
   - Lock the doors by pressing the lock button on the smart key.
     After completion of the steps above, the hazard warning lights will operate once to indicate that the system is armed.
     If any door (and tailgate) or engine hood remains open, the hazard warning lights won't operate and theft-alarm will not arm. After this, if all doors (and tailgate) and engine hood are closed, the hazard warning lights blink once.

Using the transmitter

Park the vehicle and stop the engine. Arm the system as described below.

1. Turn off the engine and remove the ignition key from the ignition switch.
2. Make sure that all doors (and tailgate), the engine hood are closed and latched.
3. Lock the doors by pressing the lock button on the transmitter.
   After completion of the steps above, the hazard warning lights will blink once to indicate that the system is armed.
   If any door (and tailgate) or engine hood remains open, the hazard warning lights won't operate and theft-alarm will not arm. After this, if all doors (and tailgate) and engine hood are closed, the hazard warning lights blink once.

- **Do not arm the system until all passengers have left the vehicle. If the system is armed while a passenger(s) remains in the vehicle, the alarm may be activated when the remaining passenger(s) leave the vehicle. If any door, tailgate or engine hood is opened within 30 seconds after entering the armed stage, the system is disarmed to prevent unnecessary alarm.**

Theft-alarm stage

The alarm will be activated if any of the following occurs while the system is armed.

- A door is opened without using the transmitter (or smart key).
- The tailgate is opened without using the transmitter (or smart key).
- The engine hood is opened.

The horn will sound and the hazard warning lights will blink continuously for approximately 30 seconds. To turn off the system, unlock the doors with the transmitter (or smart key).

Disarmed stage

The system will be disarmed when:

Transmitter

- The door unlock button is pressed.
- The engine is started.
- The ignition switch is in the "ON" position for 30 seconds or more.

Smart key

- The door unlock button is pressed.
- The button of the front outside door is pressed while carrying the smart key.
- The engine is started.

After the doors are unlocked, the hazard warning lights will blink twice to indicate that the system is disarmed.

After pressing the unlock button, if any door (or tailgate) is not opened within 30 seconds, the system will be rearmed.

✻ NOTICE

Immobilizer system

- If the system is not disarmed with the transmitter, insert the key into the ignition switch and start the engine. Then the system will be disarmed.
- If you lose your keys, Kia recommends to visit an authorized Kia dealer/service partner.

⚠ CAUTION

Do not change, alter or adjust the theft-alarm system because it could cause the theft-alarm system

to malfunction. Have the system serviced by a professional workshop. Kia recommends to visit an authorized Kia dealer/service partner.

Malfunctions caused by improper alterations, adjustments or modifications to the theft-alarm system are not covered by your vehicle manufacturer warranty.

Door locks

Operating door locks from outside the vehicle

Mechanical key

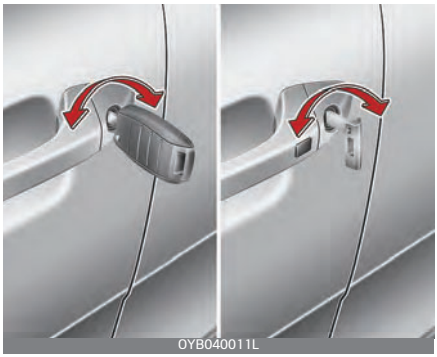

- Turn the key toward the rear of the vehicle to lock and toward the front of the vehicle to unlock.
- If you lock/unlock the door with a key, the doors will lock/unlock.
- If you lock/unlock the driver's door with a key, the driver's door will lock/unlock automatically.
- Once the doors are unlocked, they may be opened by pulling the door handle.
- When closing the door, push the door by hand. Make sure that doors are closed securely.

Transmitter/Smart key

- Doors can be locked and unlocked with the transmitter (or smart key. (if equipped)

- Doors can be locked and unlocked pressing the button of the outside door handle with the smart key in your possession.
- Once the doors are unlocked, they may be opened by pulling the door handle.
- When closing the door, push the door by hand. Make sure that doors are closed securely.

✻ NOTICE

- In cold and wet climates, door locks and door mechanisms may not work properly due to freezing conditions.
- If the door is locked/unlocked multiple times in rapid succession with either the vehicle key or door lock switch, the system may stop operating temporarily in order to protect the circuit and prevent damage to system components.

⚠ WARNING

- If you don't close the door securely, the door may open again.
- Be careful that someone's body and hands are not trapped when closing the door.

⚠ WARNING

If people must spend a longer time in the vehicle while it is very hot or cold outside, there is risk of injuries or danger to life. Do not lock the vehicle from the outside when there are people in it.

⚠ CAUTION

Do not frequently repeat opening and closing of doors, or apply excessive force to a door while the door closer is operating.

In case of an emergency (if equipped)

If the power door lock switch does not operate electrically, the only way to lock the door(s) is with the mechanical key from the outside key hole.

Doors without the outside key hole, you can lock the door as follows:

1. Open the door.
2. Insert the key into the emergency door lock hole and turn the key horizontally to lock (1).



OYB040012L

3. Close the door securely.

NOTICE

Once the tailgate is closed when the power door lock switch does not operate electrically, you will not be able to open the tailgate.

Operating door locks from inside the vehicle

With the door handle

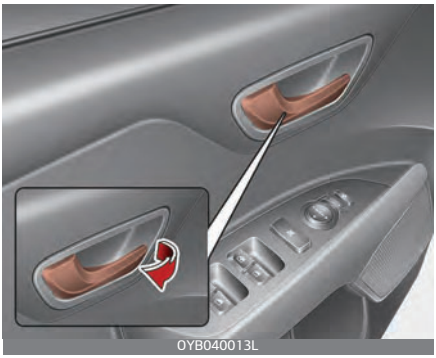
OYB040013L

Front door

If the inner door handle is pulled when the door is locked, the door will unlock and open.

Rear door

If the inner door handle is pulled once when the door is locked, the door will unlock.

If the inner door handle is pulled once more, the door will open.

WARNING

Door lock malfunction

If a power door lock ever fails to function while you are in the vehicle, try one or more of the following techniques to exit:

- Operate the door unlock feature repeatedly (both electronic and manual) while simultaneously pulling on the door handle.
- Operate the other door locks and handles, front and rear.
- Lower a front window and use the key to unlock the door from outside.
- Move to the cargo area and open the tailgate.

WARNING

Do not pull the inner door handle of driver's (or passenger's) door while the vehicle is moving.

With central door lock/unlock switch

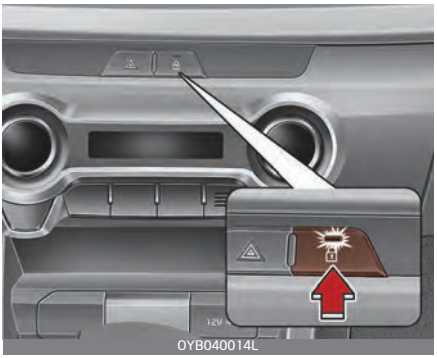

It is operated by pressing the door lock/unlock switch.

- When you press the central door lock switch, all vehicle doors will lock and the indicator light on the switch will illuminate.
- If any front door is opened when the switch is pressed, all doors will not lock.
- If any door is unlocked, the indicator of the central door lock switch will go off.
- When you press the central door unlock switch, all vehicle doors will unlock.
- If one of the door is unlocked while all doors are locked, the indicator will blink.

NOTICE

Once the doors are locked with the transmitter or smart key, the doors cannot be unlocked with the central door lock/ unlock switch.

WARNING

Doors

- The doors should always be fully closed and locked while the vehicle is in motion to prevent accidental opening of the door. Locked doors will also discourage potential intruders when the vehicle stops or slows down.
- Be careful when opening doors and watch for vehicles, motorcycles, bicycles or pedestrians approaching the vehicle in the path of the door. Opening a door when something is approaching can cause damage or injury.

WARNING

Unlocked vehicles

Leaving your vehicle unlocked can invite theft or possible harm to you or others from someone hiding in your vehicle while you are gone. Always remove the ignition key, engage the parking brake, close all windows and lock all doors when leaving your vehicle unattended.

WARNING

Unattended children

An enclosed vehicle can become extremely hot, causing death or severe injury to unattended children or animals who cannot escape

the vehicle. Furthermore, children might operate features of the vehicle that could injure them, or they could encounter other harm, possibly from someone gaining entry to the vehicle. Never leave children or animals unattended in your vehicle.

Impact sensing door unlock system (if equipped)

All doors will automatically unlock after an impact causes the air bags to deploy.

Speed sensing door lock system (if equipped)

All doors will be automatically locked after the vehicle speed exceeds 15 km/h. And all doors will be automatically unlocked when you turn the engine off and when you remove the ignition key. (if equipped)

Child-protector rear door lock

The child safety lock is provided to help prevent children from accidentally opening the rear doors from inside the vehicle.The rear door safety locks should be used whenever children are in the vehicle.

1. Open the rear door.
2. Insert a key (or screwdriver) into the hole and turn it to the lock ( ) position. When the child safety lock is in the lock position, the rear door will not open even though the inner door handle is pulled.


OYB040015L

3. Close the rear door.

To open the rear door, pull the outside door handle.

Even though the doors may be unlocked, the rear door will not open by pulling the inner door handle until the rear door child safety lock is unlocked.

⚠ WARNING

Rear door locks

If children accidentally open the rear doors while the vehicle is in motion, they could fall out and be severely injured or killed. To prevent children from opening the rear doors from the inside, the rear door safety locks should be used whenever children are in the vehicle.

Rear Occupant Alert (ROA) system (if equipped)

The Rear Occupant Alert (ROA) system is provided to help prevent exiting the vehicle with the rear passenger left in the vehicle.

- When you open the front door after opening and closing the rear door and turning off the engine, the “Check rear seats” warning message appears on the cluster.

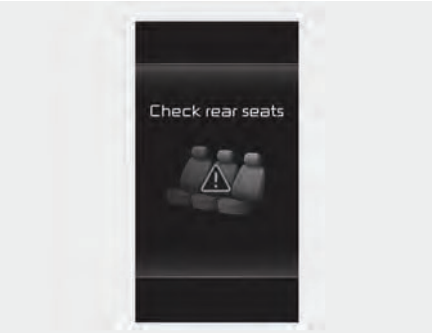

OYB040608L

You can activate or deactivate the ROA from the Use Settings mode in the cluster LCD display.

The option can be found under the following menu:

1. Press the MODE button several times on the steering wheel until 'User Settings' menu appears on the LCD.
2. Select 'Convenience → Rear Occupant Alert' with the MODE Switch and the OK button on the steering wheel.

⚠ WARNING

The Rear Occupant Alert (ROA) system does not actually detect objects or people in the rear seat. By using a rear door opened and closed history, the system informs the driver that there may be something in the rear seat.

⚠ CAUTION

The Rear Occupant Alert (ROA) system uses a rear door opened and closed history.

The history is reset after the driver turns off ignition normally, gets off the vehicle and locks the door remotely using the remote keyless entry. So even if a rear door does not reopen, the ROA system alert can occur.

For example, after the ROA system alert occur, if the driver do not lock the door then ride and drive again, the alert can occur.

Tailgate

Opening the tailgate

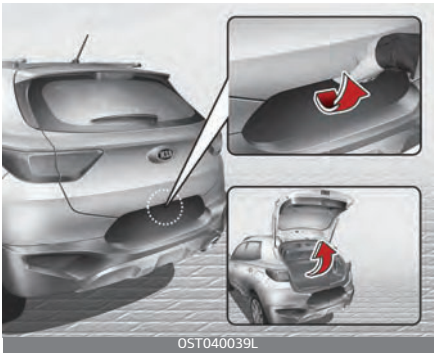
OST040039L

- The tailgate is locked or unlocked when all doors are locked or unlocked with the transmitter (or smart key) or central door lock switch.
- If unlocked, the tailgate can be opened by pressing the handle and pulling it up.
- When all doors are lock if the tailgate unlock button on the smart key is pressed for more than 1 second, the tailgate is unlocked. Once the tailgate is opened and then closed, the tailgate is locked automatically.

* There is not the key hole.

NOTICE

In cold and wet climates, door lock and door mechanisms may not work properly due to freezing conditions.

WARNING

The tailgate swings upward. Make sure no objects or people are near the rear of the vehicle when opening the tailgate.

CAUTION

Make certain that you close the tailgate before driving your vehicle. Possible damage may occur to the tailgate gas lifters and attached hardware if the tailgate is not closed prior to driving.

Closing the tailgate


OST040016L

To close the tailgate, lower and push down the tailgate firmly. Make sure that the tailgate is securely latched.

WARNING

Make sure your hands, feet and other parts of your body are safely

out of the way before closing the tailgate.

⚠ CAUTION

Make sure nothing is near the tailgate latch and striker while closing the tailgate. It may damage the tailgate's latch.

⚠ WARNING

Exhaust fumes

If you drive with the tailgate open, you will draw dangerous exhaust fumes into your vehicle which can cause serious injury or death to vehicle occupants.

If you must drive with the tailgate open, keep the air vents and all windows open so that additional outside air comes into the vehicle.

The tailgate lid should be always kept completely closed while the vehicle is in motion. If it is left open or ajar, poisonous exhaust gases may enter the car and serious illness or death may result.

⚠ WARNING

Rear cargo area

Occupants should never ride in the rear cargo area where no restraints are available. To avoid injury in the event of an accident or sudden stops, occupants should always be properly restrained.

⚠ WARNING

- For emergencies, be fully aware of the location of the emergency tailgate safety release lever in the vehicle and how to open the tailgate if you are accidentally locked in the luggage compartment.
- No one should be allowed to occupy the luggage compartment of the vehicle at any time. The luggage compartment is a very dangerous location in the event of a crash.
- Use the release lever for emergencies only. Use with extreme caution, especially while the vehicle is in motion.

Emergency tailgate safety release

Your vehicle is equipped with the emergency tailgate safety release lever located on the bottom of the tailgate. When someone is inadvertently locked in the luggage compartment.

The tailgate can be opened by doing as follows:

1. Input the mechanical key into the hole.
2. Push the mechanical key to the right (1).



3. Push up the tailgate.

Windows

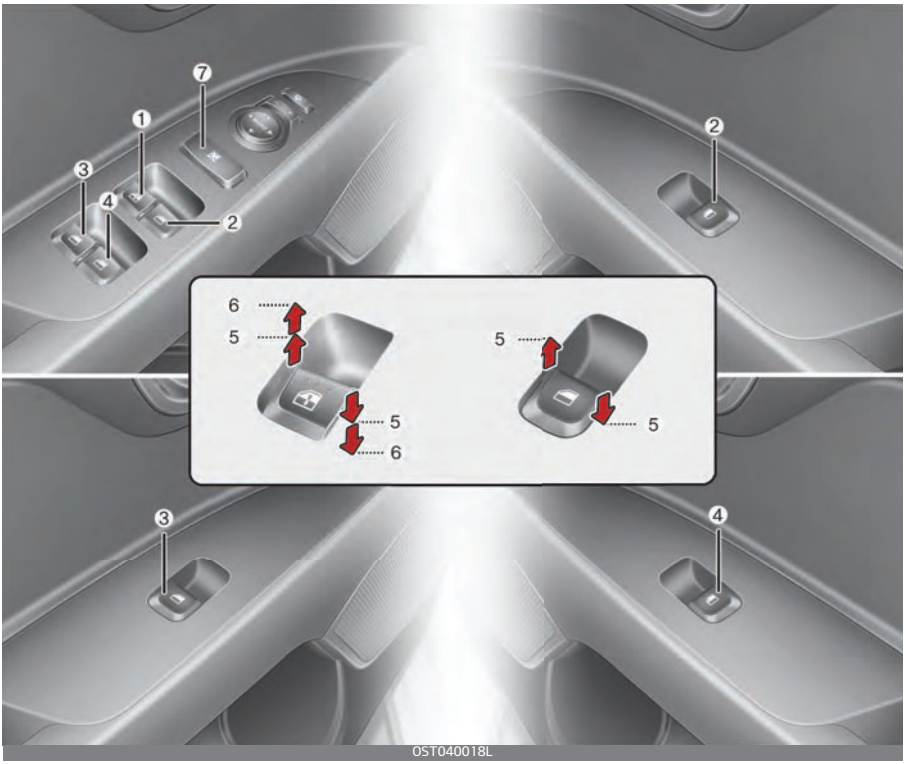

OST040018L

1. Driver's door power window switch
2. Front passenger's door power window switch
3. Rear door (left) power window switch*
4. Rear door (right) power window switch*
5. Window opening and closing
6. Automatic power window up*/down* (Driver's window)
7. Power window lock switch*

* : if equipped

✻ NOTICE

In cold and wet climates, power windows may not work properly due to freezing conditions.

Power windows (if equipped)

The ignition switch must be in the ON position for power windows to operate.

Each door has a power window switch that controls the door's window. The driver has a power window lock switch which can block the operation rear passenger windows. The power windows can be operated for approximately 3 minutes after the ignition key is removed or turned to the ACC or LOCK position. However, if the front doors open, the power windows cannot be operated within the 3 minutes period.

If the window cannot be close because it is blocked by objects, remove the objects and close the window.

✻ NOTICE

While driving with the rear windows down or with the sunroof (if equipped) in an open (or partially open position), your vehicle may demonstrate a wind buffeting or pulsation noise. This noise is a normal occurrence and can be reduced or eliminated by taking the following actions. If the noise occurs with one or both of the rear windows down, partially lower both front windows approximately one inch. If you experience the noise with the sunroof open, slightly reduce the size of the sunroof opening.

⚠ WARNING

Do not install any accessories in the area of windows. It may impact jam protection.

Window opening and closing

The driver's door has a master power window switch that controls all the windows in the vehicle.

Type A

To open or close a window, press down or pull up the front portion of the corresponding switch to the first detent position (5).



OJA040474

Type B – Auto up/down window (if equipped)

Pressing or pulling up the power window switch momentarily to the second detent position (6) completely lowers or lifts the window

even when the switch is released. To stop the window at the desired position while the window is in operation, pull up or press and release the switch to the opposite direction of the movement.

If the power window is not operated correctly, the automatic power window system must be reset as follows:

1. Turn the ignition switch to the ON position.
2. Close the window and continue pulling up on the driver's power window switch for at least 1 second after the window is completely closed.

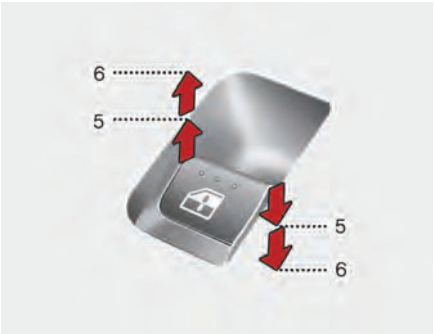

OJA040475

Automatic reversal

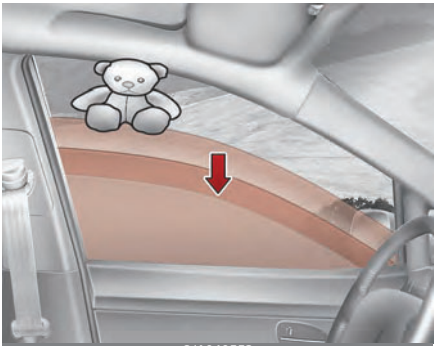
OJA040552

If the upward movement of the window is blocked by an object or part of the body, the window will detect the resistance and will stop upward movement. The window will then lower approximately 30 cm (11.8 in.) to allow the object to be cleared.
If the window detects the resistance while the power window switch is pulled up continuously, the window will stop upward movement then lower approximately 2.5 cm (1 in.). And if the power window switch is pulled up continuously again within 5 seconds after the window is lowered by the automatic window reversal feature, the automatic window reversal will not operate.

✻ NOTICE

The automatic reverse feature for the driver's window is only active when the "auto up" feature is used by fully pulling up the switch. The automatic reverse feature will not operate if the window is raised

using the halfway position on the power window switch.

⚠ WARNING

Always check for obstructions before raising any window to avoid injuries or vehicle damage. If an object less than 4 mm (0.16 in.) in diameter is caught between the window glass and the upper window channel, the automatic reverse window may not detect the resistance and will not stop and reverse direction.

⚠ WARNING

The automatic reverse feature doesn't active while resetting power window system.

Make sure body parts or other objects are safely out of the way before closing the windows to avoid injuries or vehicle damage.

Power window lock button (if equipped)


OYB040021L

- The driver can disable the power window switches on the rear passenger doors by pressing the power window lock button located on the driver's door to the LOCK position (pressed).
- **When the power window lock button is in the LOCK position (pressed), the driver's master control can operate all power windows. Also, the front passenger's control can operate the front passenger's power window.**

⚠ CAUTION

- To prevent possible damage to the power window system, do not open or close two windows or more at the same time. This will also ensure the longevity of the fuse.
- Never try to operate the main switch on the driver's door and the individual door window switch in opposite directions at the same

time. If this is done, the window will stop and cannot be opened or closed.

⚠ WARNING

Windows

- NEVER leave the ignition key in the vehicle with unsupervised children, when the engine is running.
- NEVER leave any child unattended in the vehicle. Even very young children may inadvertently cause the vehicle to move, entangle themselves in the windows, or otherwise injure themselves or others.
- Always double check to make sure all arms, hands, head and other obstructions are safely out of the way before closing a window.
- Do not allow children to play with the power windows. Keep the driver's door power window lock button in the LOCK position (pressed). Serious injury can result from unintentional window operation by the child.
- Do not extend a face or arms outside through the window opening while driving.

Manual windows (if equipped)

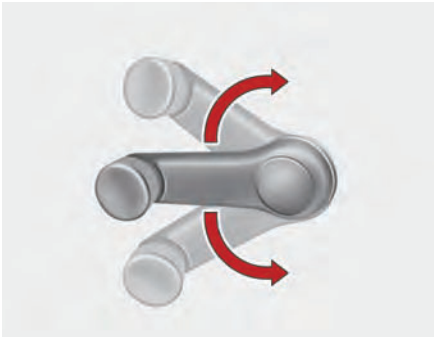

OJA040509L

To raise or lower the window, turn the window regulator handle clockwise or counterclockwise.

⚠ WARNING

When opening or closing the windows, make sure your passenger's arms, hands and body are safely out of the way.

Hood

Opening the hood

1. Pull the release lever to unlatch the hood. The hood should pop open slightly.


OYB040022L

⚠ WARNING

Open the hood after turning off the engine on a flat surface, shifting the shift lever to the P (Park) position for Automatic Transmission/Dual Clutch Transmission and to the 1st(First) gear or R (Reverse) for Manual Transmission/Intelligent Manual Transmission, and setting the parking brake.

2. Go to the front of the vehicle, raise the hood slightly, push the secondary latch (1) inside of the hood center and lift the hood (2).

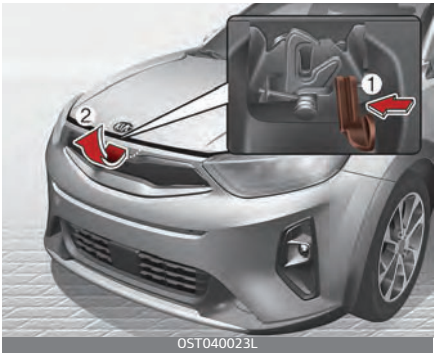

OST040023L

3. Pull the support rod.


OYB040024L

4. Hold the hood open with the support rod.

⚠ WARNING

Hot parts

Grasp the support rod in the area wrapped in rubber. The rubber will help prevent you from being burned by hot metal when the engine is hot.

Hood open warning (if equipped)


OST040547L

The warning message will appear on the LCD display when hood is open.

The warning chime will operate when the vehicle is being driven at or above 3 km/h (2 mph) with the hood open.

Closing the hood

1. Before closing the hood, check the following:
   - All filler caps in engine compartment must be correctly installed.
   - Gloves, rags or any other combustible material must be removed from the engine compartment.
2. Return the support rod to its clip to prevent it from rattling.
3. Lower the hood until it is about 30 cm above the closed position and let it drop. Make sure that it locks into place.
4. Check that the hood has engaged properly. If the hood can be raised slightly, it is not properly engaged. Open it again and close it with a little more force.

⚠ WARNING

- Before closing the hood, ensure that all obstructions are removed from the hood opening. Closing the hood with an obstruction present in the hood opening may result in property damage or severe personal injury.
- Do not leave gloves, rags or any other combustible material in the engine compartment. Doing so may cause a heat-induced fire.

⚠ WARNING

- Always double check to be sure that the hood is firmly latched before driving away. If it is not latched, the hood could fly open while the vehicle is being driven, causing a total loss of visibility, which might result in an accident.
- The support rod must be inserted completely into the hole provided in the hood whenever you inspect the engine compartment. This will prevent the hood from falling and possibly injuring you.
- Do not move the vehicle with the hood raised. The view will be blocked and the hood could fall or be damaged.

Fuel filler door

Opening the fuel filler door

The fuel filler door must be opened from inside the vehicle by pulling up on the fuel filler door opener located on the front floor area on the driver's seat.

NOTICE

If the fuel filler door will not open because ice has formed around it, tap lightly or push on the lid to break the ice and release the lid. Do not pry on the lid. If necessary, spray around the lid with an approved de-icer fluid (do not use radiator anti-freeze) or move the vehicle to a warm place and allow the ice to melt.

1. Stop the engine.
2. To open the fuel filler door, pull up the fuel filler door opener.



3. Pull the fuel filler door (1) out to fully open.
4. To remove the cap, turn the fuel tank cap (2) counterclockwise.

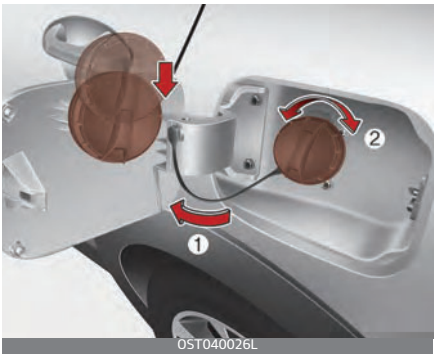

5. Refuel as needed.

WARNING

Before refueling, be sure to check what type of fuel is used for your vehicle.

If you put diesel fuel into a gasoline-powered vehicle or gasoline into a diesel-powered vehicle, it may affect the fuel system and cause serious damage to the vehicle.

Closing the fuel filler door

1. To install the cap, turn it clockwise until it "clicks". This indicates that the cap is securely tightened.
2. Close the fuel filler door and push it lightly and make sure that it is securely closed.

⚠ WARNING

Refueling

- If pressurized fuel sprays out, it can cover your clothes or skin and thus subject you to the risk of fire and burns. Always remove the fuel cap carefully and slowly. If the cap is venting fuel or if you hear a hissing sound, wait until the condition stops before completely removing the cap.
- Do not "top off" after the nozzle automatically shuts off when refueling.
- Always check that the fuel cap is installed securely to prevent fuel spillage in the event of an accident.

⚠ WARNING

Refueling dangers

Automotive fuels are flammable materials. When refueling, please note the following guidelines carefully. Failure to follow these guidelines may result in severe personal injury, severe burns or death by fire or explosion.

- Read and follow all warnings at the gas station facility.
- Before refueling note the location of the Emergency Gasoline Shut-Off, if available, at the gas station facility.
- Before touching the fuel nozzle, you should eliminate potentially dangerous static electricity discharge by touching another metal part of the vehicle, a safe distance away from the fuel filler neck, nozzle, or other gas source.
- Do not get back into a vehicle once you have begun refueling since you can generate static electricity by touching, rubbing or sliding against any item or fabric (polyester, satin, nylon, etc.) capable of producing static electricity. Static electricity discharge can ignite fuel vapors resulting in rapid burning.
  If you must re-enter the vehicle, you should once again eliminate potentially dangerous static electricity discharge by touching a metal part of the vehicle, away from the fuel filler neck, nozzle or other gasoline source.
- When using an approved portable fuel container, be sure to place the container on the ground prior to refueling. Static electricity discharge from the container can ignite fuel vapors causing a fire. Once refueling has begun, contact with the vehicle should be maintained until the filling is complete. Use only approved portable plastic fuel containers designed to carry and store gasoline.
- Do not use cellular phones while refueling. Electric current and/or

electronic interference from cellular phones can potentially ignite fuel vapors causing a fire.
- When refueling, always shut the engine off. Sparks produced by electrical components related to the engine can ignite fuel vapors causing a fire. Once refueling is complete, check to make sure the filler cap and filler door are securely closed, before starting the engine.
- DO NOT use matches or a lighter and DO NOT SMOKE or leave a lit cigarette in your vehicle while at a gas station especially during refueling. Automotive fuel is highly flammable and can, when ignited, result in fire.
- If a fire breaks out during refueling, leave the vicinity of the vehicle, and immediately contact the manager of the gas station and then contact the local fire department. Follow any safety instructions they provide.

⚠ CAUTION

- Make sure to refuel your vehicle according to the "Fuel requirements" on page 1-2".
- If the fuel filler cap requires replacement, please make sure that you use parts designed for replacement in your vehicle.
  An incorrect fuel filler cap can result in a serious malfunction of the fuel system or emission control system. For more detailed information, Kia recommends to contact an authorized Kia dealer/service partner.
- Do not spill fuel on the exterior surfaces of the vehicle. Any type of fuel spilled on painted surfaces may damage the paint.
- After refueling, make sure the fuel cap is installed securely to prevent fuel spillage in the event of an accident.

Sunroof (if equipped)



If your vehicle is equipped with a sunroof, you can slide or tilt your sunroof with the sunroof control lever located on the overhead console.

The sunroof can only be opened, closed, or tilted when the ignition switch is in the ON position.

NOTICE

- In cold and wet climates, the sunroof may not work properly due to freezing conditions.
- After a vehicle is washed or in a rainstorm be sure to wipe off any water that is on the sunroof before operating it.

CAUTION

- Do not continue to move the sunroof control lever after the sunroof is fully opened, closed, or tilted. Damage to the motor or system components could occur.
- Make sure the sunroof is closed fully when leaving your vehicle. If the sunroof is open, rain or snow may leak through the sunroof and wet the interior as well as cause theft.

NOTICE

The sunroof cannot slide when it is in the tilt position nor can it be tilted while in an open or slide position.

WARNING

Never adjust the sunroof or sunshade while driving. This could result in loss of control and an accident that may cause death, serious injury, or property damage.

WARNING

- In order to prevent accidental operation of the sunroof, especially by a child, do not let a child operate the sunroof.
- Do not sit on the top of the vehicle. It may cause vehicle damage.

Sliding the sunroof

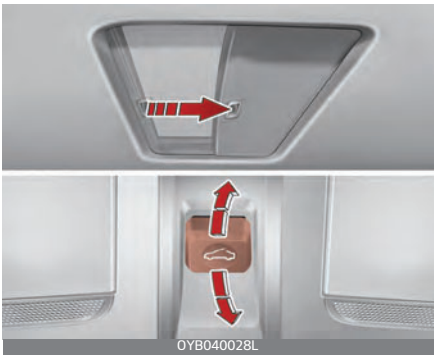

To open the sunroof, push the sunroof control lever backward.

To close the sunroof, push the sunroof control lever forward.

To open the sunroof automatically

Pull the sunroof control lever backward to the second detent position and then release it. The sunroof will slide to the recommended open position (about 5 cm before the maximum slide open position).

To stop the sunroof sliding at any point, push the sunroof control lever momentarily.

To close the sunroof automatically

Push the sunroof control lever forward to the second detent position and then release it. The sunroof will automatically close all the way.

To stop the sunroof sliding at any point, push the sunroof control lever momentarily.

NOTICE

To reduce wind noise while driving, it is recommended that you drive with the sunroof slightly closed (stop the sunroof about 5 cm (2 in.) before the maximum slide open position).

WARNING

Make sure heads, other body parts or other objects are safely out of the way before closing the window to avoid injuries or vehicle damage.

Objects less than 4 mm (0.16 inch) in diameter caught between the sunroof glass and the front window channel may not be detected by the automatic reverse window and the window will not stop and reverse direction.

Automatic reversal



If an object or part of the body is detected while the sunroof is closing

automatically, it will reverse the direction, and then stop.

The auto reverse function does not work if a tiny obstacle is between the sliding glass and the sunroof sash. You should always check that all passengers and objects are away from the sunroof before closing it.

⚠ WARNING

- Never try pinching any part of your body intentionally to activate the Automatic reversal function.
- The Automatic reversal function may not work if something gets caught just before the sunroof fully closes.

Tilting the sunroof

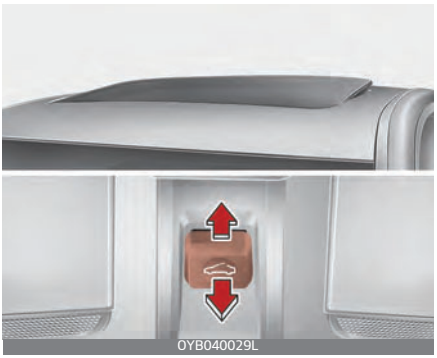

To open the sunroof, push the sunroof control lever upward until the sunroof moves to the desired position.

To close the sunroof, push the sunroof lever forward until the sunroof moves to the desired position.

⚠ WARNING

- Make sure heads, other body parts or other objects are safely out of the way before closing the sunroof to avoid injuries or vehicle damage.
- Never adjust the sunroof or sunshade while driving. This may cause loss of vehicle control resulting in an accident.
- To avoid serious injury or death, do not extend your head, arms or body outside the sunroof while driving.

⚠ CAUTION

- Periodically remove any dirt that may accumulate on the guide rail.
- If you try to open the sunroof when the temperature is below freezing or when the sunroof is covered with snow or ice, the glass or the motor could be damaged.
- While using sunroof for a long time, a dust between sunroof and roof panel can make a noise. Open the sunroof and remove regularly the dust using clean cloth.
- The sunroof is made to slide together with sunshade. Do not

leave the sunshade closed while the sunroof is open.

Sunshade


ORBC040097

The sunshade will be opened with the glass panel automatically when the glass panel is slid. You will have to close it manually if you want it closed.

Resetting the sunroof

Sunroof needs to be reset if (in the followings)

- Battery is discharged or disconnected or the related fuse has been replaced or disconnected.
- The one-touch sliding function of the sunroof does not normally operate.

1. The ignition switch must be in the ON position.
2. Close the sunroof completely.
3. Release the control lever.
4. Push the control lever forward until the sunroof tilts and slightly moves up and down. Then, release lever.
5. Push the control lever forward until the sunroof is operated as follows:
   TILT OPEN → SLIDE OPEN → SLIDE CLOSE
   Then, release the control lever.

If the sunroof does not operate properly after resetting, have the system checked by a professional workshop. Kia recommends to visit an authorized Kia dealer/service partner.

⚠ CAUTION

If the sunroof is not reset when the vehicle battery is disconnected or discharged, or related fuse is blown, the sunroof may operate improperly.

Steering wheel

Electric power steering

Power steering uses the motor to assist you in steering the vehicle. If the engine is off or if the power steering system becomes inoperative, the vehicle may still be steered, but it will require increased steering effort.

The motor driven power steering is controlled by the power steering control unit which senses the steering wheel torque, steering wheel position and vehicle speed to command the motor.

The steering wheel becomes heavier as the vehicle's speed increases and becomes lighter as the vehicle's speed decreases for better control of the steering wheel.

Should you notice any change in the effort required to steer during normal vehicle operation, have the system checked by a professional workshop. Kia recommends to visit an authorized Kia dealer/service partner.

✻ NOTICE

The following symptoms may occur during normal vehicle operation:

- The EPS warning light does not illuminate.
- The steering effort is high immediately after turning the ignition switch on. This happens as the system performs the EPS system diagnostics. When the diagnostics is completed, the steering wheel will return to its normal condition.
- A click noise may be heard from the EPS relay after the ignition switch is turned to the ON or LOCK position.
- Motor noise may be heard when the vehicle is at a stop or at a low driving speed.
- When abnormality is detected in the electric power steering system, to prevent a deadly accident, the steering assist function will stop. At this time, the warning light turns on or blinks on the cluster. The steering wheel may become difficult to control or operate. Have your vehicle checked immediately, after moving the vehicle to a safe zone.
- If the Electric Power Steering System does not operate normally, the warning light will illuminate on the instrument cluster. The steering wheel may become difficult to control or operate abnormally. In this case, have the system inspected by a professional workshop.
  Kia recommends to visit an authorized Kia dealer/service partner.

- The steering effort increases if the steering wheel is rotated continuously when the vehicle is not in motion. However, after a few minutes, it will return to its normal conditions.
- When you operate the steering wheel in low temperature, abnormal noise could occur. If temperature rises, the noise will disappear. This is a normal condition.
- When the charging system warning light comes on or the voltage is low (When the alternator (or battery) does not operate normally or it malfunctions), the steering wheel may get heavy and become difficult to control operate abnormally.

Tilt & telescopic steering

A tilt and telescopic steering wheel allows you to adjust the steering wheel before you drive.

You can also raise it to give your legs more room when you exit and enter the vehicle.

The steering wheel should be positioned so that it is comfortable for you to drive, while permitting you to see the instrument panel warning lights and gauges.

⚠ WARNING

- Never adjust the angle of the steering wheel while driving. You may lose steering control and cause severe personal injury, death or accidents.
- After adjusting, push the steering wheel both up and down to be certain it is locked in position.



To change the steering wheel angle, pull down the lock release lever (1), adjust the steering wheel to the desired angle (2) and height (3, if equipped), then pull up the lock-release lever to lock the steering wheel in place. Be sure to adjust the steering wheel to the desired position before driving.

Heated steering wheel (if equipped)

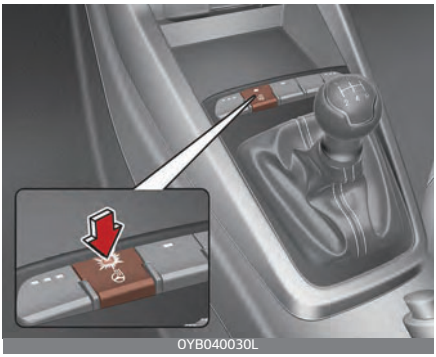
OYB040030L

When the ignition switch is in the ON position, pressing the heated steering wheel button warms the steering wheel. The indicator on the button will illuminate.

To turn the steering wheel off, press the button once again. The indicator on the button will turn off.

It will turn off automatically approximately 30 minutes after the heated steering wheel is turned on.

If you turn off the ignition within 30 minutes after pressing the steering wheel heater button, from next ignition ON, the heater will be off.

⚠ CAUTION

- Do not install any grip to operate the steering wheel. This causes damage to the heated steering wheel system.
- When cleaning the heated steering wheel, do not use an organic solvent such as paint thinner, benzene, alcohol and gasoline. Doing so may damage the surface of the steering wheel.
- If the surface of steering wheel is damaged by sharp object, damage to the heated steering wheel components could occur.

Horn



OJA040479

To sound the horn, press the horn symbols on your steering wheel. Check the horn regularly to be sure it operates properly.

✻ NOTICE

To sound the horn, press the area indicated by the horn symbol on your steering wheel (see illustration). The horn will operate only when this area is pressed.

⚠ CAUTION

Do not strike the horn severely to operate it, or hit it with your fist. Do not press on the horn with a sharp-pointed object.

Mirrors

Inside rearview mirror

Adjust the rearview mirror to center on the view through the rear window. Make this adjustment before you start driving.

⚠ WARNING

Rear visibility

Do not place objects in the rear seat or cargo area which would interfere with your vision through the rear window.

⚠ WARNING

Do not adjust the rearview mirror while the vehicle is moving. This could result in loss of control, and an accident which could cause death, serious injury or property damage.

⚠ WARNING

Do not modify the inside mirror and do not install a wide mirror. It could result in injury, during an accident or deployment of the air bag.

Day/night rearview mirror

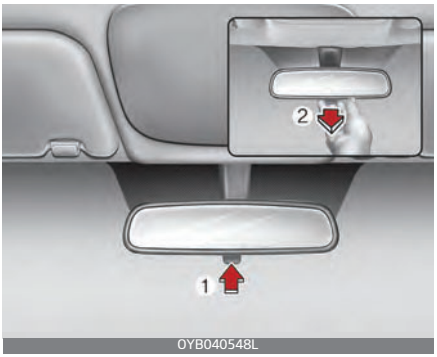

* (1) : Day, (2) : Night

Make this adjustment before you start driving and while the day/night lever is in the day position (1).

Pull the day/night lever toward you (2) to reduce the glare from the headlights of the vehicles behind you during night driving.

Remember that you lose some rearview clarity in the night position.

Electrochromic mirror (ECM) (if equipped)



The electric rearview mirror automatically controls the glare from the headlights of the vehicles behind you in nighttime or low light driving conditions. The sensor (3) mounted in the mirror senses the light level around the vehicle, and automatically controls the headlight glare from the vehicles behind you.

When the engine is running, the glare is automatically controlled by the sensor mounted in the rearview mirror.

Whenever the shift lever is shifted into reverse (R), the mirror will automatically go to the brightest setting in order to improve the drivers view behind the vehicle.

⚠ CAUTION

When cleaning the mirror, use a paper towel or similar material dampened with glass cleaner. Do not spray glass cleaner directly on the mirror. It may cause the liquid cleaner to enter the mirror housing.

To operate the electric rearview mirror:

- The mirror defaults to the ON position whenever the ignition switch is turned on.
- Press the ON/OFF button (1) to turn the automatic dimming

function off. The mirror indicator light (2) will turn off.
Press the ON/OFF button (1) to turn the automatic dimming function on. The mirror indicator light (2) will illuminate.

Outside rearview mirror

Be sure to adjust mirror angles before driving.

Your vehicle is equipped with both left-hand and right-hand outside rearview mirrors. The mirrors can be adjusted remotely with the remote switch. The mirror heads can be folded back to prevent damage during an automatic car wash or when passing in a narrow street.

⚠ WARNING

Rearview mirrors

- The outside rearview mirror is convex. Objects seen in the mirror are closer than they appear.
- Use your interior rearview mirror or direct observation to determine the actual distance of following vehicles when changing lanes.

⚠ CAUTION

Do not scrape ice off the mirror face; this may damage the surface of the glass. If ice should restrict movement of the mirror, do not force the mirror for adjustment. To remove ice, use a deicer spray, or a sponge or soft cloth with very warm water.

⚠ CAUTION

If the mirror is jammed with ice, do not adjust the mirror by force. Use an approved spray de-icer (not radiator antifreeze) to release the frozen mechanism or move the vehicle to a warm place and allow the ice to melt.

⚠ WARNING

Do not adjust or fold the outside rearview mirrors while the vehicle is moving. This could result in loss of control, and an accident which could cause death, serious injury or property damage.

Remote control

Electric type

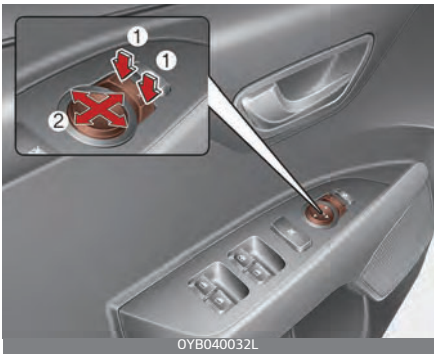

The electric remote control mirror switch allows you to adjust the position of the left and right outside rearview mirrors. To adjust the position of either mirror, the ignition switch should be in the ACC position.

To adjust the position of either mirror, press the R or L button (1) to select the right side mirror or the left side mirror, then press a corresponding point (▲) on the mirror adjustment control (2) to position the selected mirror up, down, left or right.

After adjustment, press the R or L button again to prevent the inadvertent adjustment.

⚠ CAUTION

- The mirrors stop moving when they reach the maximum adjusting angles, but the motor continues to operate while the switch is pressed. Do not press the switch longer than necessary, the motor may be damaged.
- Do not attempt to adjust the outside rearview mirror by hand. Doing so may damage the parts.
- When the mirror control, press exactly "▲" (2) marking area. Otherwise, the mirror will move to unintended direction or malfunction.

Folding the outside rearview mirror

Electric Type (if equipped)

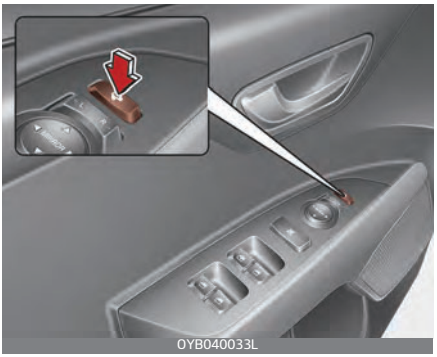

To fold the outside rearview mirror, depress the button.

To unfold it, depress the button again.

⚠ CAUTION

The electric type outside rearview mirror operates even though the ignition switch is in the OFF position. However, to prevent unnecessary battery discharge, do not adjust the

mirrors longer than necessary while the engine is not running.

⚠ CAUTION

In case it is an electric type outside rearview mirror, don't fold it by hand. It could cause motor failure.

Manual type



To fold outside rearview mirror, grasp the housing of mirror and then fold it toward the rear of the vehicle.

Instrument cluster

Type A



OST040101L

Type B



OYB040550L

1. Tachometer
2. Speedometer
3. Engine coolant temperature gauge
4. Fuel gauge
5. Warning and indicator lights
6. LCD display

* The actual cluster in the vehicle may differ from the illustration.
  For more details, refer to the "Gauges" on page 4-52.

Instrument cluster control

Adjusting Instrument Cluster Illumination (if equipped)

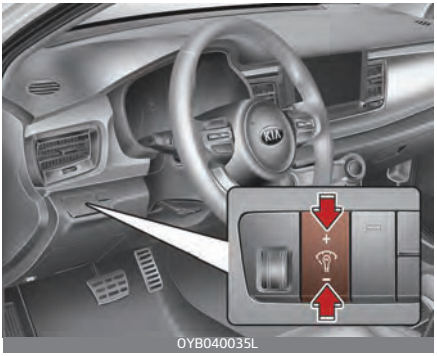

OYB040035L

⚠ WARNING

Never adjust the instrument cluster while driving. This could result in loss of control and lead to an accident that may cause death, serious injury, or property damage.

The brightness of the instrument panel illumination is changed by pressing the illumination control button ("+" or "–") when the ignition switch or ENGINE START/STOP button is ON, or the tail lights are turned on.

Type A



OYB046120

Type B



OJA040571L

- If you hold the illumination control button ("+" or "–"), the brightness will be changed continuously.
- If the brightness reaches to the maximum or minimum level, an alarm will sound.

LCD display control

The LCD display modes can be changed by using the control buttons on the steering wheel.

Type A

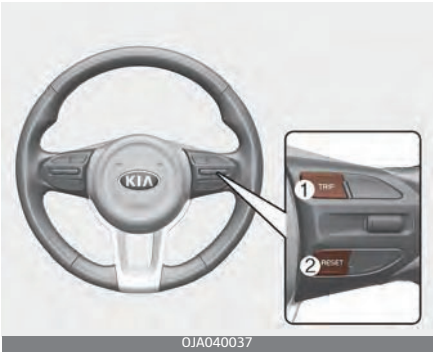

1. TRIP: TRIP button for changing modes.
2. RESET: RESET button for resetting the selected item.

Type B

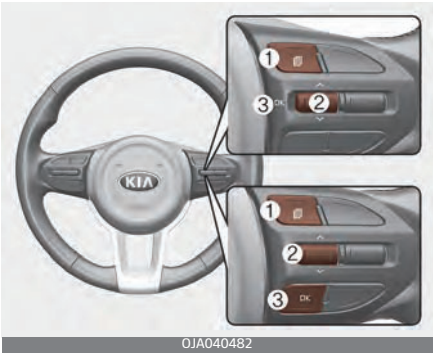

1. : MODE button for change the LCD MODES
2. ∧/∨: MOVE scroll switch for select the items
3. OK: SET/RESET button for set the items or reset the items

Gauges

Speedometer

km/h



MPH, km/h

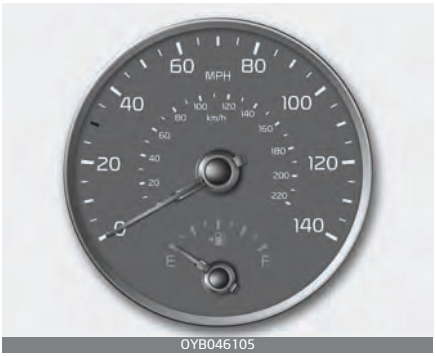

The speedometer indicates the speed of the vehicle and is calibrated in miles per hour (mph) and/or kilometers per hour (km/h).

Tachometer



OYB046106

The tachometer indicates the approximate number of engine revolutions per minute (rpm).

Use the tachometer to select the correct shift points and to prevent lugging and/or over-revving the engine.

⚠ CAUTION

Do not operate the engine within the tachometer's RED ZONE. This may cause severe engine damage.

Engine Coolant Temperature Gauge



OST040601L

This gauge indicates the temperature of the engine coolant when the ignition switch or ENGINE START/STOP button is ON.

⚠ CAUTION

If the gauge pointer moves beyond the normal range area toward the "130" position, it indicates overheating that may damage the engine. Do not continue driving with an overheated engine. If your vehicle overheats, refer to "If the engine overheats" on page 6-8.

⚠ WARNING

Never remove the radiator cap when the engine is hot. The engine coolant is under pressure and could severely burn. Wait until the engine is cool before adding coolant to the reservoir.

Fuel Gauge



OYB046109

This gauge indicates the approximate amount of fuel remaining in the fuel tank.

✻ NOTICE

- The fuel tank capacity is given in "Recommended lubricants and capacities" on page 8-8.
- The fuel gauge is supplemented by a low fuel warning light, which will illuminate when the fuel tank is nearly empty.
- On inclines or curves, the fuel gauge pointer may fluctuate or the low fuel warning light may come on earlier than usual due to the movement of fuel in the tank.

⚠ WARNING

Fuel Gauge

Running out of fuel can expose vehicle occupants to danger. You must stop and obtain additional fuel as soon as possible after the warning light comes on or when the gauge indicator comes close to the "0" level.

⚠ CAUTION

Avoid driving with a extremely low fuel level. Running out of fuel could cause the engine to misfire damaging the catalytic converter.

Odometer

Type A



OYB040123L

Type B



ODL3049125

The odometer Indicates the total distance that the vehicle has been driven and should be used to determine when periodic maintenance should be performed.

- Odometer range : 0 ~ 1,599,999 km or 999,999 miles.

Distance to empty

Type A



OYB040126L

Type B



ODL3049126

- The distance to empty is the estimated distance the vehicle can be driven with the remaining fuel.
  – Distance range: 1 ~ 9,999 km or 1 ~ 9,999 mi.
- If the estimated distance is below 1 km (1 mi.), the trip computer will display "---" as distance to empty.

⚠ CAUTION

- If the vehicle is not on level ground or the battery power has been interrupted, the distance to empty function may not operate correctly.
- The distance to empty may differ from the actual driving distance as it is an estimate of the available driving distance.
- The trip computer may not register additional fuel if less than 6 liters (1.6 gallons) of fuel are added to the vehicle.
- The distance to empty may vary significantly based on driving conditions, driving habits, and condition of the vehicle.

Outside Temperature Gauge

Type A



OYB040124L

Type B



OJA040510L

This gauge indicates the current outside air temperatures by 1°C (1°F).

- Temperature range :
  - Type A : - 40°C ~ 85°C (- 40°F ~ 199°F)
  - Type B : - 40°C ~ 85°C (- 40°F ~ 211°F)

The outside temperature on the display may not change immediately like a general thermometer to prevent the driver from being inattentive.

To change the temperature unit (from °C to °F or from °F to °C)

- Type A Cluster
  - Vehicle Speedometer Unit is km/h : Press the TRIP button for 5 seconds, the Fuel Economy unit is blink. Press the TRIP button, the temperature unit is blink. And then press the RESET button, the temperature unit is changed.

- Vehicle Speedometer Unit is MPH : Press the TRIP button for 5 seconds, the temperature unit is blink. And then press the RESET button, the temperature unit is changed.

• Type B Cluster

The temperature unit can be changed by using the “User Settings” mode of the LCD display.

* For more details, refer to "LCD display (for Type B cluster)" on page 4-68.

Transmission shift indicator

Automatic Transmission Shift Indicator (if equipped)

Type A



OYB040551L

Type B



ODL3049128

This indicator displays which Automatic Transmission shift lever is selected.

- Park : P
- Reverse : R
- Neutral : N
- Drive : D
- Sports Mode : 1, 2, 3, 4, 5, 6

Automatic Transmission Shift Indicator in Sports Mode (if equipped)

Type A



OYB040137L

Type B



In the Sports Mode, this indicator informs which gear is desired while driving to save fuel.

- Shifting up: ▲2, ▲3, ▲4, ▲5, ▲6

For example
▲3 : Indicates that shifting up to the 3rd gear is desired (currently the shift lever is in the 2nd or 1st gear). When the system is not working properly, the indicator is not displayed.

Manual Transmission Shift Indicator/Intelligent Manual Transmission Shift Indicator (if equipped)

Type A



Type B



This indicator informs which gear is desired while driving to save fuel.

Manual Transmission

- For 5 speed transmission
  - Shifting up : ▲2, ▲3, ▲4, ▲5
  - Shifting down : ▼3, ▼4
- For 6 speed transmission
  - Shifting up : ▲2, ▲3, ▲4, ▲5, ▲6
  - Shifting down : ▼3, ▼4, ▼5

Intelligent Manual Transmission

- For 6 speed transmission
  - Shifting up : ▲2, ▲3, ▲4, ▲5, ▲6
  - Shifting down : ▼2, ▼3, ▼4, ▼5

For example

▲3: Indicates that shifting up to the 3rd gear is desired (currently the shift lever is in the 2nd or 1st gear).

▼3: Indicates that shifting down to the 3rd gear is desired (currently the shift lever is in the 4th, 5th, or 6th gear).

When the system is not working properly, the indicator is not displayed.

Dual Clutch Transmission shift indicator (if equipped)

Type A



OYB040551L

Type B



ODL3049128

This indicator displays which shift lever is selected.

- Park : P
- Reverse : R
- Neutral : N
- Drive : D1, D2, D3, D4, D5, D6, D7
- Sports Mode : S1, S2, S3, S4, S5, S6, S7

Dual Clutch Transmission shift indicator in Sports Mode (if equipped)

Type A



OYB040137L

Type B



OJA040569L

In the Sports Mode, this indicator informs which gear is desired while driving to save fuel.

- Shifting up : ▲2, ▲3, ▲4, ▲5, ▲6, ▲7

For example

▲3: Indicates that shifting up to the 3rd gear is desired (currently the shift lever is in the 2nd or 1st gear).

When the system is not working properly, the indicator is not displayed.

Trip Computer (if equipped)

Trip information (Trip computer) (For Type A cluster)

The trip computer is a microcomputer-controlled driver information system that displays information related to driving.

✻ NOTICE

Some driving information stored in the trip computer (for example Average Vehicle Speed) resets if the battery is disconnected.

Trip Modes

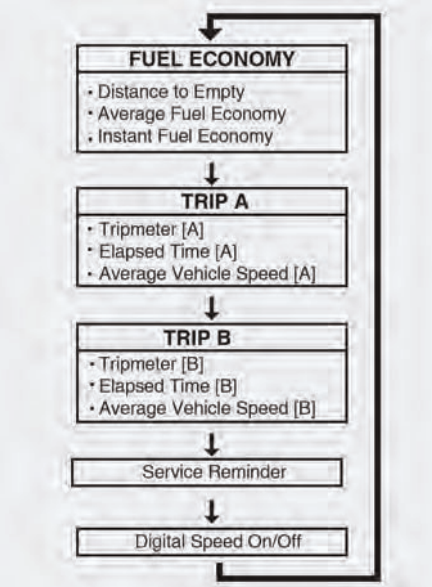

OYB040562L

Trip A/B



0UC046118

Tripmeter (1)

- The tripmeter is the total driving distance since the last tripmeter reset.
  - Distance range : 0.0 ~ 9999.9 km or mi.
- To reset the tripmeter, press the RESET button on the steering wheel for more than 1 second when the tripmeter is displayed.

Elapsed Time (2)

- The elapsed time is the total driving time since the last elapsed time reset.
  - Time range (hh:mm) : 00:00 ~ 99:59
- To reset the elapsed time, press the RESET button on the steering wheel for more than 1 second when the elapsed time is displayed.

✻ NOTICE

Even if the vehicle is not in motion, the elapsed time keeps going while the engine is running.

Average Vehicle Speed (3)

- The average vehicle speed is calculated by the total driving distance and driving time since the last average vehicle speed reset.
  - Speed range : 0 ~ 999 km/h or mph
- To reset the average vehicle speed, press the RESET button on the steering wheel for more than 1 second when the average vehicle speed is displayed.

✻ NOTICE

- The average vehicle speed is not displayed if the driving distance is less than 300 meters (0.19 miles) or the driving time is less than 10 seconds since the ignition switch or the ENGINE START/STOP button is turned to ON.
- Even if the vehicle is not in motion, the average vehicle speed keeps going while the engine is running.

Fuel Economy



OYB040128L

Average Fuel Economy (1)

- The average fuel economy is calculated by the total driving distance and fuel consumption since the last average fuel economy reset.
  - Fuel economy range: 0 ~ 99.9 L/100km, km/L or MPG
- The average fuel economy can be reset both manually and automatically.

- **Manual reset**
  To clear the average fuel economy manually, press the RESET button on the steering wheel for more than 1 second when the average fuel economy is displayed.
- **Automatic reset**
  To make the average fuel economy be reset automatically.
  - When refueling : After refueling more than 6 liter (1.6 gallons) and driving over 1 km/h (1 mph), the vehicle will reset to default automatically.

✻ NOTICE

The average fuel economy is not displayed for more accurate calculation if the vehicle does not drive more than 10 seconds or 300 meters (0.19 miles) since the ignition switch or ENGINE START/STOP button is turned to ON.

Instant Fuel Economy (2)

- This mode displays the instant fuel economy during the last few seconds when the vehicle speed is more than 8 km/h (5 MPH).
  - Fuel economy range: 0.0 ~ 30 L/100km, km/L or 0.0 ~ 50.0 MPG

To change the Fuel Economy unit (km/L ↔ L/100km)

Press the TRIP button for 5 seconds, the Fuel Economy unit is blink. And then press the RESET button, the fuel economy unit is changed.

Service Reminder

If the remaining mileage or time reaches 1,500 km (900 miles) or 30 days, the service symbol (🔧) will blink for several seconds each time you set the ignition switch or ENGINE STRAT/STOP button to the ON position.

If you exceed the specified service interval, the service symbol ( ) will blink each time you turn ON the vehicle.

To reset the service interval, press the RESET button for more than 5 seconds and then when the km and days blink press the RESET button for more than 1 second.

If the service interval is not set, the service symbol ( ) will not be displayed.

✻ NOTICE

If it is not available to set service interval on your vehicle, have the system serviced by a professional workshop. Kia recommends to consult an authorized Kia dealer/service partner.

Digital speedometer



OYB040130L

This mode displays the current speed of the vehicle.

Digital speed ON/OFF mode



OFB047122



OFB047121

Switch to Digital speed mode using the trip switch in Trip mode, and press and hold the RESET button for more than 1 second. Then it will be switched from SPEED ON to SPEED OFF or the other way around.

Trip information (trip computer) (For Type B cluster)

The trip computer is a microcomputer- controlled driver information system that displays information related to driving.

NOTICE

Some driving information stored in the trip computer resets if the battery is disconnected.

Trip Modes

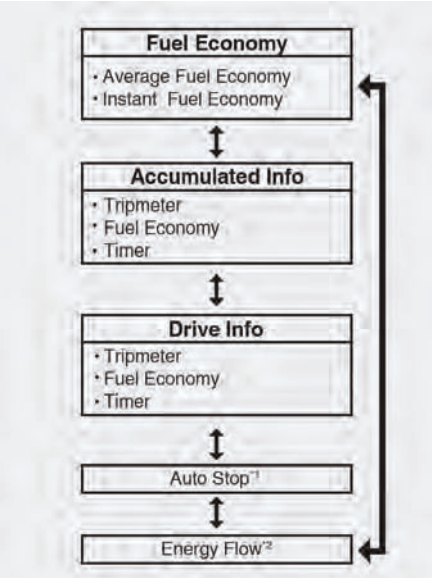

OYB040555L

To change the trip mode, scroll the toggle the switch (∧ / ∨) on the steering wheel.

* 1 : if equipped

* 2 : for 48-Volt Hybrid vehicle

Fuel economy



OJA040518L

Average Fuel Economy (1)

- The average fuel economy is calculated by the total driving distance and fuel consumption since the last average fuel economy reset.
  - Fuel economy range: 0.0 ~ 99.9 L/100km, km/L or MPG
- The average fuel economy can be reset both manually and automatically.

- **Manual reset**
  To clear the average fuel economy manually, press the OK button on the steering wheel for more than 1 second when the average fuel economy is displayed.
- **Automatic reset**
  To make the average fuel economy be reset automatically whenever refueling, select the

"Fuel economy auto reset " mode in User Setting menu of the LCD display (Refer to "User settings mode" on page 4-71).
- Off : You may set to default manually by using the trip switch reset button.
- After vehicle On: The vehicle will automatically set to default once 4 hours pass after the Ignition is in OFF.
- After refuelling: After refueling more than 6 liters and driving over 1 km/h, the vehicle will reset to default automatically.

✻ NOTICE

The average fuel economy is not displayed for more accurate calculation if the vehicle does not drive more than 10 seconds or 300 meters (0.2 miles) since the ignition switch or ENGINE START/STOP button is turned to ON.

Instant Fuel Economy (2)

- This mode displays the instant fuel economy during the last few seconds when the vehicle speed is more than 8 km/h (5 mph).
  - Fuel economy range: 0 ~ 30 L/100km, km/L or 0 ~ 50 MPG

Accumulated driving information mode

This display shows the accumulated trip distance (1), the average fuel efficiency (2), and the total driving time (3).



OJA040519L

- Accumulated information is calculated after the vehicle has run for more than 300 meters (0.2 miles).
- If you press "OK" button for more than 1 second after the Cumulative Information is displayed, the information will be reset.
- If the engine is running, even when the vehicle is not in motion, the information will be accumulated.

Drive Info display

This display shows the trip distance (1), the average fuel efficiency (2), and the total driving time (3) information once per one ignition cycle.



OJA040522L

- Fuel efficiency is calculated after the vehicle has run for more than 300 meters (0.2 miles).
- The Driving Information will be reset 4 hours after ignition has been turned off. So, when the vehicle ignition is turned on within 4 hours, the information will not be reset.
- If you press "OK" button for more than 1 second after the Driving Information is displayed, the information will be reset.
- If the engine is running, even when the vehicle is not in motion, the information will be accumulated.

Auto stop time (if equipped)



OJA040523L

This mode displays the elapsed time of Auto stop by "Idle stop and go system".

For more details, refer to "Idle Stop and Go (ISG) system (if equipped)" on page 5-17.

Energy flow (for 48V HEV) (if equipped)

The mild hybrid system informs the driver regarding the energy flow in various operating modes. While driving, the current energy flow is specified in 3 modes.

Vehicle stop

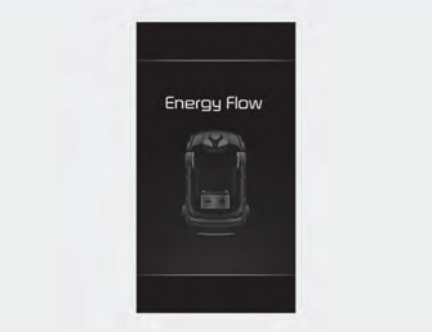

OST040556L

The vehicle is stopped. (No energy flow)

Engine Generation / Regeneration

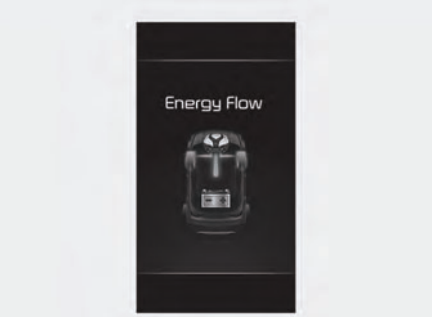

OST040557L

The engine and regenerative brake system charges up the high-voltage battery. (Engine & Wheel → Battery)

Power Assist



OST040558L

Both the motor and the engine power are used to drive the vehicle. (Battery & Engine → Wheel)

LCD display (for Type B cluster)

LCD display modes

	Mode				
	Trip Computer	Driving Assist	User Settings	Information	Master warning
Up/Down	Fuel Economy	• Lane Keeping Assist • Lane Following Assist	Driver assistance	Digital Speedometer	The Master Warning mode displays warning messages related to the vehicle when one or more systems is not operating normally.
	Accumulated Info	Driver Attention Warning	Lights		
	Drive Info	Intelligent Speed Limit Warning	Door		
	Auto Stop		Convenience		
	Energy flow		Service interval		
			Theme Selection		
			Other features		
			Language		
			Reset		

The information provided may differ depending on which functions are applicable to your vehicle.

* For controlling the LCD modes, refer to "LCD display control" on page 4-51".

Trip computer mode



OJA040514L

The trip computer mode displays information related to vehicle driving parameters including fuel economy, tripmeter information and vehicle speed.

* For more details, refer to "Trip information (trip computer) (For Type B cluster)" on page 4-64.

Driving Assist mode (if equipped)



OST040553L

This mode displays the state of:

- – Smart Cruise Control (if equipped)
  – Lane Keeping Assist (if equipped)
  – Lane Following Assist (if equipped)
- Driver Attention Warning (if equipped)
- Intelligent Speed Limit Warning (if equipped)

* For more details, refer to each system information in "Driving your vehicle" on page 5-1.

Setting

To change the Driver Assistance settings, press the OK button on the steering wheel for more than 1 second when the Driving Assist mode is displayed.

⚠ WARNING

While driving, please do not change the setting mode. It may distract your attention and cause the accident.

Item	Explanation
SCC response	Fast/Normal/Slow
Driving assist	SLW (Speed Limit Warning)
Warning timing	Normal/Late
DAW (Driver Attention Warning)	Leading vehicle departure alert/Swaying warning
Forward safety	Active assist/Warning only/Off
Lane safety	Standard LKA (Lane Keeping Assist)/LDW (Lane Departure Warning)/Off

Item	Explanation
Blind-spot safety	Active assist/Warning only/ Off
Parking safety	Auto PDW (Parking Distance Warning)/Rear Cross-Traffic Safety

✻ NOTICE

The information provided may differ depending on which functions are applicable to your vehicle.

Information

Digital speedometer

This digital speedometer display shows the speed of the vehicle.



ODL3049152

Master warning mode



OJA040486

This warning light informs the driver the following situations.

- Forward Collision-Avoidance Assist malfunction (if equipped)
- Forward Collision-Avoidance Assist radar blocked (if equipped)
- Blind-Spot Collision Warning malfunction (if equipped)
- Blind-Spot Collision Warning radar blocked (if equipped)
- Intelligent Speed Limit Warning malfunction (if equipped)
- High Beam Assist malfunction (if equipped)
- Smart Cruise Control malfunction (if equipped)
- Smart Cruise Control radar blocked (if equipped)
- LED headlamp malfunction (if equipped)
- TPMS failure, low pressure, etc.

At this time, a Master Warning icon (⚠) will appear on the LCD display. If the warning situation is solved, the master warning light will be

turned off and the Master Warning icon will disappear.

User settings mode

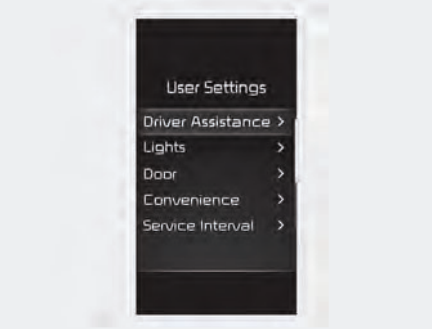

0YB040554L

In this mode, you can change the settings of the instrument cluster, doors, lamps, etc.

1. Driver Assistance
2. Lights
3. Door
4. Convenience
5. Service Interval
6. Theme Selection
7. Other
8. Language
9. Reset

The information provided may differ depending on which functions are applicable to your vehicle.

Shift to P to edit settings/Engage parking brake to edit settings

This warning message appears if you try to adjust the User Settings while driving.

- Automatic Transmission/Dual Clutch Transmission

For your safety, change the User Settings after parking the vehicle, applying the parking brake and moving the shift lever to P (Park).

- Manual Transmission/Intelligent Manual Transmission

For your safety, change the User Settings after engaging the parking brake.

1. Driver assistance (if equipped)

Items	Explanation
SCC response	• Fast/Normal/Slow To adjust the sensitivity of Smart Cruise Control. * For more details, refer to "Smart Cruise Control (SCC) (if equipped)" on page 5-128.
Driver assistance	• SLW (Speed Limit Warning) To activate or deactivate Intelligent Speed Limit Warning. * For more details, refer to "Intelligent Speed Limit Warning (ISLW) (if equipped)" on page 5-112.
Warning timing	• Normal/Late To select the Warning time
DAW (Driver Attention Warning)	• Leading vehicle departure alert • Swaying warning To select the function. * For more details, refer to "Driver Attention Warning (DAW) (if equipped)" on page 5-117.
Forward safety	• Active assist/Warning only/Off To select the functions. * For more details, refer to "Forward Collision-Avoidance Assist (FCA) (Sensor fusion) (if equipped)" on page 5-66.
Lane safety	• Standard LKA (Lane Keeping Assist)/LDW (Lane Departure Warning)/Off To select the functions. * For more details, refer to "Lane Keeping Assist (LKA) (if equipped)" on page 5-81.
Blind-spot safety	• Active assist/Warning only/Off To select the function. * For more details, refer to "Blind-Spot Collision Warning (BCW) (if equipped)" on page 5-88 / "Blind-Spot Collision-Avoidance Assist (BCA) (if equipped)" on page 5-98.
Parking safety	• Auto PDW (Parking Distance Warning) To select the function. • Rear cross-traffic safety To select the function. * For more details, refer to "Rear Cross-Traffic Collision Warning (RCCW) (if equipped)" on page 5-147 and "Rear Cross-Traffic Collision-Avoidance Assist (RCCA) (if equipped)" on page 5-154.

* The information provided may differ depending on which systems are applicable to your vehicle.

2. Lights

Items	Explanation
One touch turn indicator	• Off: The one touch turn signal function will be deactivated. • 3, 5, 7 flashes: The turn signal indicator will blink 3, 5, or 7 times when the turn signal lever is moved slightly. * For more details, refer to "Lighting" on page 4-104.
Head lamp delay	• To activate or deactivate the headlight delay function.
HBA (High Beam Assist) (if equipped)	• To activate or deactivate High Beam Assist function.

* The information provided may differ depending on which functions are applicable to your vehicle.

3. Door

Items	Explanation
Auto lock	• Enable on shift (if equipped with Automatic Transmission/Dual Clutch Transmission): All doors will be automatically locked if the vehicle is shifted from the P (Park) position to the R (Reverse), N (Neutral), or D (Drive) position. (with the engine ON, it is activated.) • Enable on speed: All doors will be automatically locked when the vehicle speed exceeds 15 km/h (9.3 mph). • Off : The auto door lock operation will be deactivated.
Auto unlock	• On shift to P (if equipped with Automatic Transmission/Dual Clutch Transmission): All doors will be automatically unlocked if the gear is shifted to the P (Park) position. (with the engine ON, it is activated.) • Vehicle off/On key out : All doors will be automatically unlocked when the ENGINE START/STOP button is set to the OFF position or the ignition key is removed from the ignition switch. • Off : The auto door unlock operation will be canceled.

* The information provided may differ depending on which systems are applicable to your vehicle.

4. Convenience (if equipped)

Items	Explanation
Rear Occupant Alert	• If this item checked, the Rear Occupant Alert will be activated.
Wiper/Lights display	• If this item checked, the Wiper/Lights display will be activated.
Icy road warning	• If this item is checked, the Icy road warning display will be activated.

* The information provided may differ depending on which functions are applicable to your vehicle.

5. Service interval

Items	Explanation
Enable service interval	• If this item is checked, the Service Interval function will be activated.
Adjust interval	• If the service interval menu is activated, you may adjust the time and distance.
Reset	• To reset the service interval function.

If the service interval is activated and the time and distance is adjusted, messages are displayed in the following situations each time the vehicle is turned on.

- Service in: Displayed to inform the driver the remaining mileage and days to service.
- Service required: Displayed when the mileage and days to service has been reached or passed.

If any of the following conditions occur, the mileage and number of days to service may be incorrect.

- The battery cable is disconnected.
- The battery is discharged.

6. Theme Selection

Items	Explanation
Theme selection	• Theme A/Theme B/Theme C To select the theme of instrument cluster LCD.

7. Other features

Items	Explanation
Fuel economy auto reset	• Off: The average fuel economy will not reset. • After vehicle On/After refuelling : The average fuel economy will reset automatically after vehicle on/refueling.
Speedometer unit	• km/h, MPH To select the Speedometer unit.
Fuel economy unit	• L/100km, km/L or US gallon, UK gallon To select the Fuel economy unit.
Temperature unit	• °C/°F To select the Temperature unit.

* The information provided may differ depending on which functions are applicable to your vehicle.

8. Language

Items	Explanation
Language	• To select language.

9. Reset

Items	Explanation
Reset	• You can reset the menus in the User Settings mode. All menus in the User Settings mode are reset to factory settings, except language and service interval.

Warning messages (for Type B cluster)

Warning messages appear on the LCD to warn the driver. It is located in the center of the instrument cluster.

The warning message may appear differently depending on the type of instrument cluster and some may not show the warning message at all.

The warning message is shown in either symbol, symbol and text, or text type only.

Door, hood, tailgate open

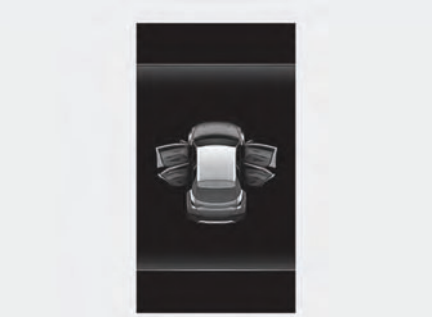

OST040559L

- This warning is displayed indicating which door, or the hood, or the tailgate is open.

Sunroof open (if equipped)



OST040560L

- This warning is displayed if you turn off the engine when the sunroof is open.

Lights mode



OYB040572L

This indicator displays which exterior light is selected using the lighting control.

You can activate or deactivate Wiper/Lights Display function from the User Settings mode in the cluster LCD display.

Wiper mode



ODL3049167L

This indicator displays which wiper speed is selected using the wiper control.

You can activate or deactivate Wiper/Lights display function from the User Settings mode in the cluster LCD display.

Engine has overheated

- This warning message illuminates when the engine coolant temperature is above 120°C (248°F). This mean that the engine is overheated and may be damaged.

* If your vehicle is overheated, refer to "If the engine overheats" on page 6-8.

Shift to P (for smart key system and Automatic Transmission/Dual Clutch Transmission)

- This warning message illuminates if you try to turn off the engine without the shift lever in P (Park) position.
- At this time, the ENGINE START/STOP button turns to the ACC position (If you press the ENGINE START/STOP button once more, it will turn to the ON position).

Low key battery (for smart key system)

- This warning message illuminates if the battery of the smart key is discharged when the ENGINE START/STOP button changes to the OFF position.

Press START button while turning wheel (for smart key system)

- This warning message illuminates if the steering wheel does not unlock normally when the ENGINE START/STOP button is pressed.
- It means that you should press the ENGINE START/STOP button while turning the steering wheel right and left.

Check steering wheel lock system (for smart key system)

- This warning message illuminates if the steering wheel does not lock normally when the ENGINE START/STOP button changes to the OFF position.

Press brake pedal to start engine (for smart key system and Automatic Transmission/Dual Clutch Transmission)

- This warning message illuminates if the ENGINE START/STOP button changes to the ACC position twice by pressing the button repeatedly without depressing the brake pedal.
- It means that you should depress the brake pedal to start the engine.

Press clutch pedal to start engine (for smart key system and Manual Transmission)

- This warning message illuminates if the ENGINE START/STOP button changes to the ACC position twice by pressing the button repeatedly without depressing the clutch pedal.
- It means that you should depress the clutch pedal to start the engine.

Press brake and clutch pedals to start engine (for smart key system and Intelligent Manual Transmission)

- This warning message illuminates if the ENGINE START/STOP button changes to the ACC position twice by pressing the button repeatedly without depressing the brake and clutch pedals.
- It means that you should depress the brake and clutch pedals to start the engine.

Key not in vehicle (for smart key system)

- This warning message illuminates if the smart key is not in the vehicle when you press the ENGINE START/STOP button.
- It means that you should always have the smart key with you.

Key not detected (for smart key system)

- This warning message illuminates if the smart key is not detected when you press the ENGINE START/STOP button.

Press START button again (for smart key system)

- This warning message illuminates if you can not operate the ENGINE START/STOP button when there is a problem with the ENGINE START/STOP button system.
- It means that you could start the engine by pressing the ENGINE START/STOP button once more.
- If the warning illuminates each time you press the ENGINE START/STOP button, have the vehicle inspected by a professional workshop. Kia recom-

mends to visit an authorized Kia dealer/service partner.

Press START button with key (for smart key system)

- This warning message illuminates if you press the ENGINE START/STOP button while the warning message "Key not detected" is illuminating.
- At this time, the immobilizer indicator light blinks.

Check BRAKE SWITCH fuse (for smart key system and Automatic Transmission/Dual Clutch Transmission)

- This warning message illuminates if the brake switch fuse is disconnected.
- It means that you should replace the fuse with a new one. If that is not possible, you can start the engine by pressing the ENGINE START/STOP button for 10 seconds in the ACC position.

Shift to P or N to start engine (for smart key system and Automatic Transmission/Dual Clutch Transmission)

- This warning message illuminates if you try to start the engine with the shift lever not in the P (Park) or N (Neutral) position.

✻ NOTICE

You can start the engine with the shift lever in the N (Neutral) position. But, for your safety, we recommend that you start the engine with the shift lever in the P (Park) position.

Check exhaust system (if equipped)

- This warning message illuminates if the GPF system has a malfunction.
- At this time, GPF warning light also blinks.
  In this case, have the vehicle inspected by a professional workshop. Kia recommended to visit an authorized Kia dealer/service partner.

Low fuel

- This warning message is displayed if the fuel tank is almost out of fuel.
- When this message is displayed, the low fuel level warning light in the cluster will come on.
- It is recommended to look for the nearest fueling station and refuel as soon as possible.

Low washer fluid (if equipped)

- This warning message is displayed if the washer fluid level in the reservoir is nearly empty.

- Have the washer fluid reservoir refilled.

Low engine oil (if equipped)

- This warning message is displayed when the engine oil level should be checked.
- If this warning message is displayed, check the engine oil level as soon as possible and add engine oil as required.
- Slowly pour the recommended oil little by little into a funnel. (Oil refill capacity : approximately 0.6 ~ 1.0 l)
- Use only the specified engine oil. (Refer to "Recommended lubricants and capacities" on page 8-8.)
- Do not overfill the engine oil. Make sure the oil level is not above F (Full) mark on the dipstick.

✻ NOTICE

If the message is displayed continuously after adding the engine oil and travelling approximately 50~100 km after the engine warms up, have the vehicle inspected by a professional workshop. Kia recommended to visit an authorized Kia dealer/service partner.

Check headlamp LED (if equipped)

- This warning message is displayed if there is a problem with the LED headlight.
  In this case, have the vehicle inspected by a professional workshop. Kia recommended to visit an authorized Kia dealer/service partner.

Check 48V system (if equipped)

- This warning message illuminates when there is a problem with the mild hybrid control system.
  Refrain from driving when the warning message is displayed.
  In this case, have the vehicle inspected by a professional workshop. Kia recommended to visit an authorized Kia dealer/service partner.

Warning and indicator lights

Warning lights

NOTICE

Warning lights

Make sure that all warning lights are OFF after starting the engine. If any light is still ON, this indicates a situation that needs attention.

Air bag Warning Light (if equipped)

This warning light illuminates:

- Once you set the ignition switch or ENGINE START/STOP button to the ON position.
  - It illuminates for approximately 6 seconds and then goes off.
- When there is a malfunction with the SRS.
  In this case, have the vehicle inspected by a professional workshop. Kia recommends to visit an authorized Kia dealer/service partner.

Seat Belt Warning Light

This warning light informs the driver that the seat belt is not fastened.

* For more details, refer to "Seat belts" on page 3-15.

Parking Brake & Brake Fluid Warning Light

This warning light illuminates:

- Once you set the ignition switch or ENGINE START/STOP button to the ON position.
  - It illuminates for approximately 3 seconds
  - It remains on if the parking brake is applied.
- When the parking brake is applied.
- When the brake fluid level in the reservoir is low.
  - If the warning light illuminates with the parking brake released, it indicates the brake fluid level in reservoir is low.

If the brake fluid level in the reservoir is low:

1. Drive carefully to the nearest safe location and stop your vehicle.
2. With the engine stopped, check the brake fluid level immediately and add fluid as required (For more details, refer to "Brake/clutch fluid (if equipped)" on page 7-39). Then check all brake components for fluid leaks. If any leak on the brake system is still found, the warning light remains on, or the brakes do not operate properly, do not drive the vehicle.
   In this case, have the vehicle towed to a professional workshop and inspected. Kia recommends to

visit an authorized Kia dealer/service partner.

Dual-diagonal braking system
Your vehicle is equipped with dualdiagonal braking systems. This means you still have braking on two wheels even if one of the dual systems should fail.
With only one of the dual systems working, more than normal pedal travel and greater pedal pressure are required to stop the vehicle.
Also, the vehicle will not stop in as short a distance with only a portion of the brake system working.
If the brakes fail while you are driving, shift to a lower gear for additional engine braking and stop the vehicle as soon as it is safe to do so.

⚠ WARNING

Parking Brake & Brake Fluid Warning Light

Driving the vehicle with a warning light ON is dangerous. If the Parking Brake & Brake Fluid Warning Light illuminates with the parking brake released, it indicates that the brake fluid level is low.

In this case, have the vehicle inspected by a professional workshop. Kia recommends to visit an authorized Kia dealer/service partner.

Anti-lock Brake System (ABS) Warning Light

This warning light illuminates:

- Once you set the ignition switch or ENGINE START/STOP button to the ON position.
  - It illuminates for approximately 3 seconds and then goes off.
- When there is a malfunction with the ABS (The normal braking system will still be operational without the assistance of the anti-lock brake system).
  In this case, have the vehicle inspected by a professional workshop. Kia recommends to visit an authorized Kia dealer/service partner.

Electronic Brake force Distribution (EBD) System Warning Light (if equipped)

These two warning lights illuminate at the same time while driving:

- When the ABS and regular brake system may not work normally.
  In this case, have the vehicle inspected by a professional workshop. Kia recommends to visit an authorized Kia dealer/service partner.

⚠ WARNING

Electronic Brake force Distribution (EBD) System Warning Light

When both ABS and Parking Brake & Brake Fluid Warning Lights are on, the brake system will not work normally and you may experience an unexpected and dangerous situation during sudden braking.

In this case, avoid high speed driving and abrupt braking.

Have the vehicle inspected by a professional workshop as soon as possible. Kia recommends to visit an authorized Kia dealer/service partner.

✻ NOTICE

Electronic Brake force Distribution (EBD) System Warning Light

When the ABS Warning Light is on or both ABS and Parking Brake & Brake Fluid Warning Lights are on, the speedometer, odometer, or tripmeter may not work. Also, the EPS Warning Light may illuminate and the steering effort may increase or decrease.

In this case, have the vehicle inspected by a professional workshop as soon as possible.

Kia recommends to visit an authorized Kia dealer/service partner.

Electric Power Steering (EPS) Warning Light

This warning light illuminates:

- Once you set the ignition switch or ENGINE START/STOP button to the ON position.
  - This indicator light comes on after the ignition key is turned to the ON position and then goes out after approximately 3 seconds.
- When there is a malfunction with the EPS.
  In this case, have the vehicle inspected by a professional workshop. Kia recommends to visit an authorized Kia dealer/service partner.

Malfunction Indicator Lamp (MIL)

This warning light illuminates:

- Once you set the ignition switch or ENGINE START/STOP button to the ON position.
  - It remains on until the engine is started.
- When there is a malfunction with the emission control system.
  In this case, have the vehicle inspected by a professional workshop. Kia recommends to visit an authorized Kia dealer/service partner.

⚠ CAUTION

Malfunction Indicator Lamp (MIL)

- Driving with the Malfunction Indicator Lamp (MIL) on may cause damage to the emission control systems which could effect drivability and/or fuel economy.
- If the enhanced engine protection system becomes activated due to lack of engine oil, engine power will be limited. If such condition continues repeatedly, the Malfunction Indicator Lamp will illuminate. (For Smartstream T-GDi engine)

⚠ CAUTION

Gasoline Engine

If the Malfunction Indicator Lamp (MIL) illuminates, potential catalytic converter damage is possible which could result in loss of engine power.

In this case, have the vehicle inspected by a professional workshop as soon as possible. Kia recommends to visit an authorized Kia dealer/service partner.

Charging System Warning Light



This warning light illuminates:

- Once you set the ignition switch or ENGINE START/STOP button to the ON position.
  - It remains on until the engine is started.
- When there is a malfunction with either the alternator or electrical charging system.

If there is a malfunction with either the alternator or electrical charging system:

1. Drive carefully to the nearest safe location and stop your vehicle.
2. Turn the engine off and check the alternator drive belt for looseness or breakage.
   In this case, have the vehicle inspected by a professional workshop as soon as possible.
   Kia recommends to visit an authorized Kia dealer/service partner.

Engine Oil Pressure Warning Light



This warning light illuminates:

- Once you set the ignition switch or ENGINE START/STOP button to the ON position.
  - It remains on until the engine is started.

- When the engine oil pressure is low.
- Drive carefully to the nearest safe location and stop your vehicle.
- Turn the engine off and check the engine oil level (For more details, refer to "Engine oil (Gasoline)" on page 7-32). If the level is low, add oil as required.
- If the warning light remains on after adding oil or if oil is not available, have the vehicle inspected by a professional workshop as soon as possible. Kia recommends to visit an authorized Kia dealer/service partner. Continued driving with the warning light on may cause engine failure.

✻ NOTICE

- When engine oil pressure decreases due to insufficient engine oil, etc., the Engine Oil Pressure warning light will illuminate.
- For Smartstream T-GDi engine, the enhanced engine protection system which limits engine power will be activated. If the engine oil pressure is restored, the Engine Oil Pressure warning light and the enhanced engine protection system will turn off.

Engine Oil Level Warning Light (if equipped)

The engine oil level warning light illuminates when the engine oil level should be checked.

If the warning light comes on, check the engine oil level as soon as possible and add engine oil as required.

Slowly pour the recommended oil little by little into a funnel.(Oil refill capacity : Approximately 0.6 l~1.0 l)

Use only the specified engine oil.(refer to "Recommended lubricants and capacities" on page 8-8.)

Do not overfill the engine oil to ensure the oil level is not above F mark on the dipstick.

✻ NOTICE

- If you travel approximately 50 km after adding the engine oil, the warning light will go off.
- Cycle the ignition from OFF to ON 3 times within 10 seconds, the warning light will go off immediately. However, when you turn off the warning light without adding the engine oil, the light will come on again after traveling approximately 50km.

⚠ CAUTION

If the light comes on continuously after adding the engine oil and traveling approximately 50 km, have the vehicle inspected by a professional workshop as soon as possible. Kia recommends to visit an authorized Kia dealer/service partner. Even if this light does not come on after the engine has started, the engine oil should be checked and supplied periodically.

Low Fuel Level Warning Light 

This warning light illuminates:
When the fuel tank is nearly empty.

If the fuel tank is nearly empty:
Add fuel as soon as possible.

⚠ CAUTION

Low Fuel Level

Driving with the Low Fuel Level warning light on or with the fuel level below “0 or E” can cause the engine to misfire and damage the catalytic converter. (if equipped)

Low Tire Pressure Warning Light 

This warning light illuminates:

- Once you set the ignition switch or ENGINE START/STOP button to the ON position.
  - It illuminates for approximately 3 seconds and then goes off.
- When one or more of your tires are significantly underinflated.

* For more details, refer to "Tire Pressure Monitoring System (TPMS) (if equipped)" on page 6-10.

This warning light remains on after blinking for approximately 70 seconds or repeats blinking and off at the intervals of approximately 3 seconds:

- When there is a malfunction with the TPMS.
  In this case, have the vehicle inspected by a professional workshop as soon as possible.
  Kia recommends to visit an authorized Kia dealer/service partner.

* For more details, refer to "Tire Pressure Monitoring System (TPMS) (if equipped)" on page 6-10.

⚠ WARNING

Safe Stopping

- The TPMS cannot alert you to severe and sudden tire damage caused by external factors.
- If you notice any vehicle instability, immediately take your foot off the accelerator pedal, apply the brakes gradually with light force, and slowly move to a safe position off the road.

Forward Collision-Avoidance Assist Warning Light (if equipped)

This indicator light illuminates:

- Once you set the ignition switch or ENGINE START/STOP button to the ON position.
  - It illuminates for approximately 3 seconds and then goes off.
- When there is a malfunction with FCA.

If this occurs, have the vehicle inspected by a professional work shop. Kia recommends to visit an authorized Kia dealer/service partner.

Master Warning Light (if equipped)

This indicator light illuminates:

- This warning light informs the driver the following situations
  - Forward Collision-Avoidance Assist malfunction (if equipped)
  - Forward Collision-Avoidance Assist radar blocked (if equipped)
  - Blind-Spot Collision Warning malfunction (if equipped)
  - Blind-Spot Collision Warning radar blocked (if equipped)
  - Intelligent Speed Limit Warning malfunction (if equipped)
  - High Beam Assist malfunction (if equipped)
  - Smart Cruise Control malfunction (if equipped)
  - Smart Cruise Control radar blocked (if equipped)
  - LED headlamp malfunction (if equipped)
  - TPMS failure, low pressure, etc.

  If the warning situation is solved, the master warning light will turn off.

Exhaust System (GPF) Warning Light (Gasoline Engine) (if equipped)

This warning light illuminates:

- When there is a malfunction with Gasoline Particulate Filter (GPF) system.
- When this warning light illuminates, it may turn off after driving the vehicle:
  - The vehicle should be driven for more than 30 minutes at a

speed of 80 km/h (50 mph) and faster.
- Ensure the following conditions are all met: safe road conditions, transmission 3rd gear or above, and engine speed of 1,500 – 4,000 rpm.

If this warning light blinks in spite of the procedure (at this time the LCD warning message will be displayed), have the GPF system checked by a professional workshop. Kia recommends to visit an authorized Kia dealer/service partner.

⚠ CAUTION

Gasoline Engine with GPF (if equipped)

If you continue to drive with the GPF warning light blinking for a long time, the GPF system can be damaged and fuel consumption can worsen.

Door Ajar Warning Light (if equipped)

This warning light illuminates:
When a door is not closed securely.

Tailgate Open Warning Light (if equipped)

This warning light illuminates:
When the tailgate is not closed securely.

Washer Fluid Warning Light (if equipped)

This warning light illuminates:
- When the washer fluid level in the reservoir is nearly empty.
  In this case, you should refill the washer fluid.

LED Headlamp Warning Light (if equipped)

This warning light illuminates:
- When there is a malfunction with the LED headlamp
  In this case, have the vehicle inspected by a professional workshop. Kia recommends to visit an authorized Kia dealer/service partner.

⚠ CAUTION

LED Headlamp Warning Light

Continuous driving with the LED Headlamp Warning Light on can reduce LED headlamp (low beam) life.

Icy Road Warning Light

This warning light is to warn the driver the road may be icy.

When the following conditions occur, the warning light (including Outside Temperature Gauge) blinks and then

illuminates, and a warning chime sounds once.

- The temperature on the Outside Temperature Gauge is below approximately 4°C (39°F).

✻ NOTICE

If the icy road warning light appears while driving, you should drive more attentively and safely, refraining from over-speeding, rapid acceleration, sudden braking or sharp turning, etc.

Indicator lights

Electronic Stability Control (ESC) Indicator Light

This indicator light illuminates:

- Once you set the ignition switch or ENGINE START/STOP button to the ON position.
  - It illuminates for approximately 3 seconds and then goes off.
- When there is a malfunction with the ESC system.
  In this case, have the vehicle inspected by a professional workshop. Kia recommends to visit an authorized Kia dealer/service partner.

This indicator light blinks:

While the ESC is operating.

* For more details, refer to "Electronic Stability Control (ESC) (if equipped)" on page 5-57.

Electronic Stability Control (ESC) OFF Indicator Light OFF

This indicator light illuminates:

- Once you set the ignition switch or ENGINE START/STOP button to the ON position.
  - It illuminates for approximately 3 seconds and then goes off.
- When you deactivate the ESC system by pressing the ESC OFF button.

* For more details, refer to "Electronic Stability Control (ESC) (if equipped)" on page 5-57.

Auto Stop Indicator (if equipped)

This indicator light illuminates:

- When the engine enters the Idle Stop mode of the ISG (Idle Stop and Go) system.
- When the automatic starting occurs, the AUTO STOP indicator on the cluster will blink for 5 seconds.

* For more details, refer to "Idle Stop and Go (ISG) system (if equipped)" on page 5-17.

✻ NOTICE

When the engine automatically starts by the ISG system, some warning lights (ABS, ESC, ESC OFF, EPS or Parking brake warning light) may turn on for a few seconds.

This happens because of the low battery voltage. It does not mean the system is malfunctioning.

Immobilizer Indicator Light (Without Smart Key)

This indicator light illuminates:

- When the vehicle detects the immobilizer in your key properly while the ignition switch is ON.
  - At this time, you can start the engine.
  - The indicator light goes off after starting the engine.

This indicator light blinks:

- When there is a malfunction with the immobilizer system.
  In this case, have the vehicle inspected by a professional workshop. Kia recommends to visit an authorized Kia dealer/service partner.

Immobilizer Indicator Light (With Smart Key)

This indicator light illuminates for up to 30 seconds:

- When the vehicle detects the smart key in the vehicle properly while the ENGINE START/STOP button is ACC or ON.
  - At this time, you can start the engine.
  - The indicator light goes off after starting the engine.

This indicator light blinks for a few seconds:

- When the smart key is not in the vehicle.
  - At this time, you can not start the engine.

This indicator light illuminates for 2 seconds and goes off:

- When the vehicle can not detect the smart key which is in the vehicle while the ENGINE START/STOP button is ON.
  In this case, have the vehicle inspected by a professional workshop. Kia recommends to visit an authorized Kia dealer/service partner.

This indicator light blinks:

- When the battery of the smart key is weak.
  - At this time, you can not start the engine. However, you can start the engine if you press

the ENGINE START/STOP button with the smart key. (For more details, refer to "Starting the engine" on page 5-15).

- When there is a malfunction with the immobilizer system.
  In this case, have the vehicle inspected by a professional workshop. Kia recommends to visit an authorized Kia dealer/service partner.

Turn Signal Indicator Light

This indicator light blinks:

- When you turn the turn signal light on.

If any of the following occurs, there may a malfunction with the turn signal system. In this case, have the vehicle inspected by a professional workshop. Kia recommends to visit an authorized Kia dealer/service partner.

- The indicator light does not blink but illuminates.
- The indicator light blinks more rapidly.
- The indicator light does not illuminate at all.

Low Beam Indicator Light (if equipped)

This indicator light illuminates:

- When the headlights are on.

High Beam Indicator Light

This indicator light illuminates:

- When the headlights are on and in the high beam position
- When the turn signal lever is pulled into the Flash-to-Pass position.

High Beam Assist Indicator (if equipped)

This warning light illuminates :

- When the high-beam is on with the light switch in the AUTO light position.
- If your vehicle detects oncoming or preceding vehicles, High Beam Assist will switch the high beam to low beam automatically.

* For more details, refer to "High Beam Assist (HBA) (if equipped)" on page 4-107.

Light ON Indicator Light

This indicator light illuminates:

- When the tail lights or headlights are on.

Front Fog Indicator Light (if equipped)

This indicator light illuminates:

- When the front fog lights are on.

Rear Fog Indicator Light (if equipped)

This indicator light illuminates:
- When the rear fog lights are on.

Cruise Indicator Light CRUISE (if equipped)

This indicator light illuminates:
- When Cruise Control is enabled.

* For more details. refer to "Cruise Control (CC) (if equipped)" on page 5-124.

Cruise SET Indicator Light SET (if equipped)

This indicator light illuminates:
- When Cruise Control speed is set.

* For more details. refer to "Cruise Control (CC) (if equipped)" on page 5-124.

Lane Keeping Assist Indicator Light (if equipped)

This indicator light illuminates :
- [Green] When the function operating conditions are satisfied.
- [White] The function operating conditions are not satisfied.
- [Yellow] When there is a malfunction with Lane Keeping Assist.

In this case, have the vehicle inspected by a professional workshop. Kia recommends to visit an authorized Kia dealer/service partner.

* For more details, refer to "Lane Keeping Assist (LKA) (if equipped)" on page 5-81.

SPORT Mode Indicator Light SPORT (if equipped)

This indicator light illuminates :
- When you select “SPORT” mode as drive mode.

* For more details, refer to "Drive mode integrated control (if equipped)" on page 5-64.

ECO Mode Indicator Light ECO (if equipped)

This indicator light illuminates :
- When you select “ECO” mode as drive mode.

* For more details, refer to "Drive mode integrated control (if equipped)" on page 5-64.

Rear View Monitor (RVM) (if equipped)



Rear View Monitor will activate when the engine is running and the shift lever is in the R (Reverse) position.

This is a supplemental function that shows behind the vehicle through the mirror or navigation display while backing-up.

⚠ WARNING

Rear View Monitor is not a safety device. It only serves to assist the driver in identifying objects directly behind the middle of the vehicle. The camera does NOT cover the complete area behind the vehicle.

⚠ WARNING

- Never rely solely on the rear camera display when backing up.
- ALWAYS look around your vehicle to make sure there are no objects or obstacles before moving the vehicle in any direction to prevent a collision.
- Always pay close attention when the vehicle is driven close to objects, particularly pedestrians, and especially children.

✻ NOTICE

- Do not spray the camera or its surrounding area directly with a high pressure washer. Shock applied from high pressure water may cause the device to not operate normally.
- Do not use any cleanser containing acid or alkaline detergents when cleaning the lens. Use only a mild soap or neutral detergent, and rinse thoroughly with water.
- If the camera lens is covered with foreign material, the Rear View Monitor may not operate normally. Always keep the camera lens clean. However, do not use chemical solvents such as strong detergents containing high alkaline or volatile organic solvents (gasoline, acetone etc.). This may damage the camera lens.

Reverse Parking Distance Warning (PDW) (if equipped)



Reverse Parking Distance Warning assists the driver during backward movement of the vehicle by chiming if any object is sensed within a distance of 120 cm (48 in.) behind the vehicle.

This function is a supplemental function and it is not intended to nor does it replace the need for extreme care and attention of the driver. The sensing range and objects detectable by the rear ultrasonic sensors (1) are limited. Whenever backing-up, pay as much attention to what is behind you as you would in a vehicle without a Reverse Parking Distance Warning.

⚠ WARNING

Reverse Parking Distance Warning is a supplementary function only. The operation of Reverse Parking Distance Warning can be affected by several factors (including environmental conditions). It is the responsibility of the driver to always check the area behind the vehicle before and while backing up.

Operation of Reverse Parking Distance Warning

Operating condition

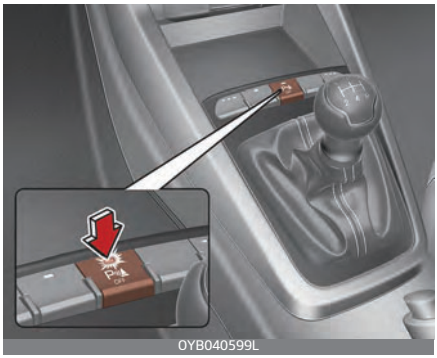

- This function will activate when the indicator on the Parking Distance Warning OFF button is not illuminated.
  If you desire to deactivate Reverse Parking Distance Warning function, press the Parking Distance Warning OFF button again. (The indicator on the button will illuminate.) To turn the function on, press the button again. (The indicator on the button will go off.)
- This function will activate when backing up with the ignition switch ON.

If the vehicle is moving at a speed over 5 km/h (3 mph), the function may not be activated correctly.
- The sensing distance while Reverse Parking Distance Warning is in operation is approximately 120 cm (48 in.).
- When more than two objects are sensed at the same time, the closest one will be recognized first.

Types of warning sound	Indicator*
When an object is 60~120 cm (24~48 in.) from the rear bumper: Buzzer beeps intermittently.	
When an object is 30~60 cm (12~24 in.) from the rear bumper: Buzzer beeps more frequently	
When an object is within 30 cm (12 in.) of the rear bumper: Buzzer sounds continuously	

* if equipped

✻ NOTICE

The indicator may differ from the illustration as objects or sensors status.

If the indicator blinks, have the function checked by a professional workshop. Kia recommends to visit an authorized Kia dealer/service partner.

Non-operational conditions of Reverse Parking Distance Warning

Reverse Parking Distance Warning may not operate properly when:

1. Moisture is frozen to the sensor. (It will operate normally when the moisture has been cleared.)
2. The sensor is covered with foreign matter, such as snow or water, or the sensor cover is blocked. (It will operate normally when the material is removed or the sensor is no longer blocked.)
3. Driving on uneven road surfaces (unpaved roads, gravel, bumps, gradient).
4. Objects generating excessive noise (vehicle horns, loud motorcycle engines, or truck air brakes) are within range of the sensor.
5. Heavy rain or water spray exists.
6. Wireless transmitters or mobile phones are within range of the sensor.
7. The sensor is covered with snow.
8. Trailer towing

The detecting range may decrease when:

1. The sensor is stained with foreign matter such as snow or water. (The sensing range will return to normal when removed.)
2. Outside air temperature is extremely hot or cold.

The following objects may not be recognized by the sensor:

1. Sharp or slim objects such as ropes, chains or small poles.
2. Objects which tend to absorb the sensor frequency such as clothes, spongy material or snow.
3. Undetectable objects smaller than 1 m (40 in.) in height and narrower than 14 cm (6 in.) in diameter.

Reverse Parking Distance Warning precautions

- Reverse Parking Distance Warning may not sound consistently depending on the speed and shapes of the objects detected.
- Reverse Parking Distance Warning may malfunction if the vehicle bumper height or sensor installation has been modified or damaged. Any non-factory installed equipment or accessories may also interfere with the sensor performance.
- The sensor may not recognize objects less than 30 cm (12 in.) from the sensor, or it may sense an incorrect distance. Use caution.
- When the sensor is frozen or stained with snow, dirt, or water, the sensor may be inoperative until the stains are removed using a soft cloth.
- Do not push, scratch or strike the sensor. Sensor damage could occur.

✻ NOTICE

This function can only sense objects within the range and location of the sensors; It can not detect objects in other areas where sensors are not installed. Also, small or slim objects, such as poles or objects located between sensors may not be detected by the sensors.

Always visually check behind the vehicle when backing up.

Be sure to inform any drivers of the vehicle that may be unfamiliar with the function regarding the functions capabilities and limitations.

⚠ WARNING

Pay close attention when the vehicle is driven close to objects on the road, particularly pedestrians, and especially children. Be aware that some objects may not be detected by the sensors, due to the object's distance, size or material, all of which can limit the effectiveness of the sensor. Always perform a visual inspection to make sure the vehicle is clear of all obstructions before moving the vehicle in any direction.

Self-diagnosis

If you don't hear an audible warning sound or if the buzzer sounds intermittently when shifting the gear to

the R (Reverse) position, this may indicate a malfunction in Reverse Parking Distance Warning. If this occurs, have the system checked by a professional workshop. Kia recommends to visit an authorized Kia dealer/service partner.

⚠ WARNING

Your new vehicle warranty does not cover any accidents or damage to the vehicle or injuries to its occupants due to a Reverse parking distance warning function malfunction. Always drive safely and cautiously.

Forward/Reverse Parking Distance Warning (PDW) (if equipped)

Front

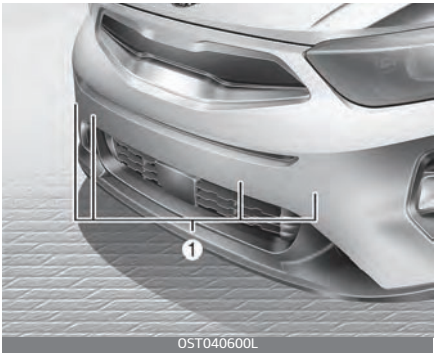

Rear



Forward/Reverse Parking Distance Warning assist the driver during movement of the vehicle by chiming if any object is sensed within the distance of 100 cm (40 in) in front and 120 cm (48 in) behind the vehicle.

This function is a supplemental function and it is not intended to nor does it replace the need for extreme care and attention of the driver.

The sensing range and objects detectable by the ultrasonic sensors (1) limited. Whenever moving pay as much attention to what is in front and behind of you as you would in a vehicle without Forward/Reverse Parking Distance Warning.

⚠ WARNING

Forward/Reverse Parking Distance Warning should only be considered as a supplementary function. The driver must check the front and rear view. The operational function of Forward/Reverse Parking Distance Warning can be affected by many factors and conditions of the surroundings, so the responsibility rests always with the driver.

Operation of Forward/Reverse Parking Distance Warning

Operating condition

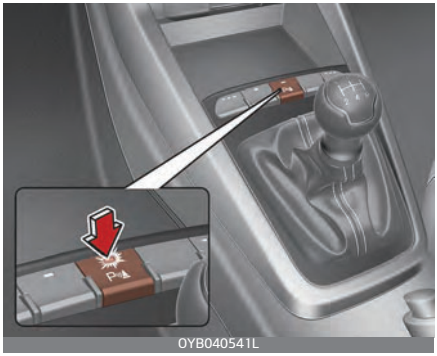

- This function activates when the Parking Safety button is pressed with the ignition switch or ENGINE START/STOP button ON.
- The indicator of the Parking Safety button turns on automatically and activates Forward/Reverse Parking Distance Warning when you shift the gear to the R (Reverse) position. It will turn off automatically when you drive above 20 km/h(12mph).
- The sensing distance while backing up is approximately 120 cm (48 in) when you are driving less than 10 km/h (6.2 mph).

- The sensing distance while moving forward is approximately 100 cm (40 in) when you are driving less than 10 km/h (6.2 mph).
- When more than two objects are sensed at the same time, the closest one will be recognized first.
- The outer sensors are activated when you shift the gear to the R (Reverse) position.
- If the vehicle speed is above 10 km/h (6 mph), the function is not activate, and the Forward/ Reverse Parking Distance Warning will turn off when you drive above 20 km/h (12 mph).
  To activate the function again, press the Parking Safety button.

✻ NOTICE

It may not operate if it's distance from the object is already very close when the function is ON.

Type of warning indicator and sound

Distance from object		Warning indicator		Warning sound
		When driving forward	When driving backward	
60 ~ 100 cm (24 ~ 40 in)	Front		-	Buzzer beeps intermittently
60 ~ 120 cm (24 ~ 48 in)	Rear	-		Buzzer beeps intermittently
30 ~ 60 cm (12 ~ 24 in)	Front			Buzzer beeps frequently
	Rear	-		Buzzer beeps frequently
30 cm (12 in)	Front			Buzzer beeps continuously
	Rear	-		Buzzer beeps continuously

✻ NOTICE

- The actual warning sound and indicator may differ from the illustration according to objects or sensor status.
- Do not wash the vehicle's sensor with high pressure water.

⚠ CAUTION

- This function can only sense objects within the range and location of the sensors;
  It can not detect objects in other areas where sensors are not installed. Also, small or slim objects, such as poles or objects located between sensors may not be detected by the sensors.
  Always visually check behind the vehicle when backing up.
- Be sure to inform any drivers of the vehicle that may be unfamiliar with the function regarding the functions capabilities and limitations.

Non-operational conditions of Forward/Reverse Parking Distance Warning

Forward/Reverse Parking Distance Warning may not operate normally when:

1. Moisture is frozen to the sensor. (It will operate normally when moisture melts.)
2. Sensor is covered with foreign matter, such as snow or water, or the sensor cover is blocked. (It will operate normally when the material is removed or the sensor is no longer blocked.)
3. Sensor is stained with foreign matter such as snow or water. (Sensing range will return to normal when removed.)
4. The Parking Safety button is off.

There is a possibility of Forward/ Reverse Parking Distance Warning malfunction when:

1. Driving on uneven road surfaces such as unpaved roads, gravel, bumps, or gradient.
2. Objects generating excessive noise such as vehicle horns, loud motorcycle engines, or truck air brakes can interfere with the sensor.
3. Heavy rain or water spray.
4. Wireless transmitters or cellular hones present near the sensor.
5. Sensor is covered with snow.

Detecting range may decrease when:

1. Outside air temperature is extremely hot or cold.

The following objects may not be recognized by the sensor:

1. Sharp or slim objects such as ropes, chains or small poles.
2. Objects, which tend to absorb sensor frequency such as clothes, spongy material or snow.
3. Undetectable objects smaller than100 cm (40 in) and narrower than 14 cm (6 in) in diameter.

*** NOTICE**

1. The warning may not sound sequentially depending on the speed and shapes of the objects detected.
2. Forward/Reverse Parking Distance Warning may malfunction if the vehicle bumper height or sensor installation has been modified. Any nonfactory installed equipment or accessories may also interfere with the sensor performance.
3. Sensor may not recognize objects less than 30 cm (12 in) from the sensor, or it may sense an incorrect distance. Use with caution.
4. When the sensor is frozen or stained with snow or water, the sensor may be inoperative until

the stains are removed using a soft cloth.

5. Do not push, scratch or strike the sensor with any hard objects that could damage the surface of the sensor. Sensor damage could occur.

NOTICE

This function can only sense objects within the range and location of the sensors, it can not detect objects in other areas where sensors are not installed. Also, small or slim objects, or objects located between sensors may not be detected.

Always visually check in front and behind the vehicle when driving.

Be sure to inform any drivers in the vehicle that may be unfamiliar with the function regarding the functions capabilities and limitations.

WARNING

Pay close attention when the vehicle is driven close to objects on the road, particularly pedestrians, and especially children. Be aware that some objects may not be detected by the sensors, due to the objects distance, size or material, all of which can limit the effectiveness of the sensor. Always perform a visual inspection to make sure the vehicle is clear of all obstructions before moving the vehicle in any direction.

Self-diagnosis

When you shift the gear to the R (Reverse) position and if one or more of the below occurs you may have a malfunction in Forward/ Reverse Parking Distance Warning.

- You don't hear an audible warning sound or if the buzzer sounds intermittently.
-  (blinks) is displayed. (if equipped)

If this occurs, have the system checked by a professional workshop. Kia recommends to visit an authorized Kia dealer/service partner.

WARNING

Your new vehicle warranty does not cover any accidents or damage to the vehicle or injuries to its occupants related to Forward/Reverse Parking Distance Warning. Always drive safely and cautiously.

Lighting

Battery saver function

- The purpose of this feature is to prevent the battery from being discharged. The system automatically turns off the parking lights when the driver removes the ignition key (smart key: turns off the engine) and opens the driver-side door.
- With this feature, the parking lights will be turned off automatically if the driver parks on the side of road at night.
  If necessary, to keep the lights on when the ignition key is removed, (smart key: turns off the engine) perform the following:
  1. Open the driver-side door.
  2. Turn the parking lights OFF and ON again using the light switch on the steering column.

Headlight escort function (if equipped)

The headlights (and/or taillights) will remain on for approximately 5 minutes after the ignition key is removed when the engine is turned off. However, if the driver's door is opened and closed, the headlights are turned off after 15 seconds.

The headlights can be turned off by pressing the lock button on the transmitter (or smart key) twice or turning off the light switch from the headlight or Auto light position.

⚠ CAUTION

If the driver gets out of the vehicle through other doors (except driver's door), the battery saver function does not operate and the headlight escort function does not turn off automatically. Therefore, It causes the battery to be discharged. In this case, make sure to turn off the lamp before getting out of the vehicle.

Headlight welcome function (if equipped)

When the headlight switch is in the ON or AUTO position and all doors (and tailgate) are closed and locked, if you press the door unlock button on the transmitter (or smart key), the headlights will come on for about 15 seconds.

If the headlight switch is in the AUTO position, the function can only operate at night.

At this time, if you press the door unlock button again or door lock button on the transmitter (or smart key), the headlights will turn off immediately.

Static bending light (if equipped)

While driving the corner, for your sight and safety, the static bending light is turned on automatically. The system will operate automatically as follows.

- When turning the headlight on
- When the angle of steering wheel is over 35~40 (it is differed from vehicle speed)
- When the vehicle speed is over 3 km/h
- When driving forward or backward.

Daytime running light (if equipped)

The Daytime Running Lights (DRL) can make it easier for others to see the front of your vehicle during the day. DRL can be helpful in many different driving conditions, and it is especially helpful after dawn and before sunset.

The DRL system turns OFF when:
1. The headlight switch is ON.
2. The engine is OFF.
3. The front fog light is on.
4. Engaging the parking brake

✻ NOTICE

Traffic Change (For Europe)

The low beam light distribution is asymmetric. If you go abroad to a country with opposite traffic direction, this asymmetric part will dazzle oncoming car driver. To prevent dazzle, ECE regulation demand several technical solutions (ex. automatic change system, adhesive sheet, down aiming). This headlamps are designed not to dazzle opposite drivers. So, you need not change your headlamps in a country with opposite traffic direction

Lighting control



OYB040408L

The light switch has a Headlight and a Parking light position.

To operate the lights, turn the knob at the end of the control lever to one of the following positions:
1. OFF position
2. Auto light position
3. Parking light position
4. Headlight position

Parking light position


OYB040410L

When the light switch is in the parking light position (2nd position), the tail position, license and instrument panel lights will turn ON.

Headlight position


OYB040412L

When the light switch is in the headlight position (3rd position), the head, tail, position, license and instrument panel lights are ON.

NOTICE

The ignition switch must be in the ON position to turn on the headlights.

Auto light position

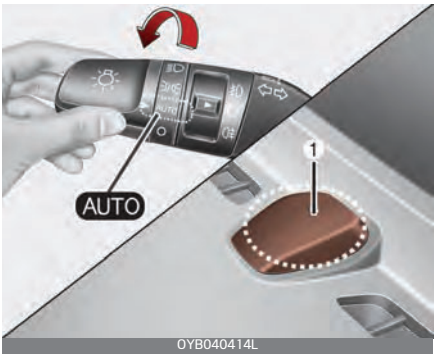

OYB040414L

When the light switch is in the AUTO light position, the taillights and headlights will be turned ON or OFF automatically depending on the amount of light outside the vehicle.

CAUTION

- Never place anything over sensor (1) located on the instrument panel, this will ensure better auto-light system control.
- Don't clean the sensor using a window cleaner, the cleanser may leave a light film which could interfere with sensor operation.
- If your vehicle has window tint or other types of metallic coating on the front windshield, the Auto

light system may not work properly.

High beam operation

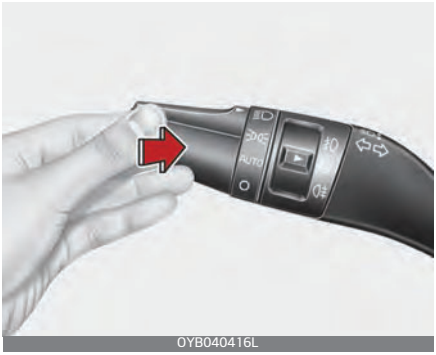
OYB040416L

To turn on the high beam headlights, push the lever away from you. Pull it back for low beams.

The high beam indicator will light when the headlight high beams are switched on. To prevent the battery from being discharged, do not leave the lights on for a prolonged time while the engine is not running.

⚠ WARNING

Do not use high beam when there are other vehicles. Using high beam could obstruct the other driver's vision.

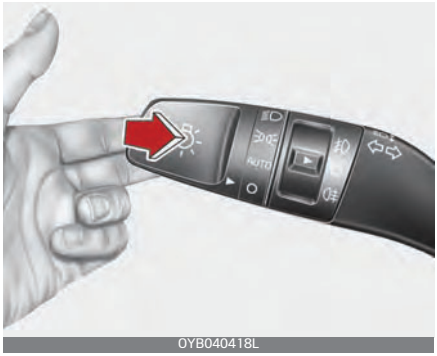
OYB040418L

To flash the headlights, pull the lever towards you. It will return to the normal (low beam) position when released. The headlight switch does not need to be on to use this flashing feature.

High Beam Assist (HBA) (if equipped)

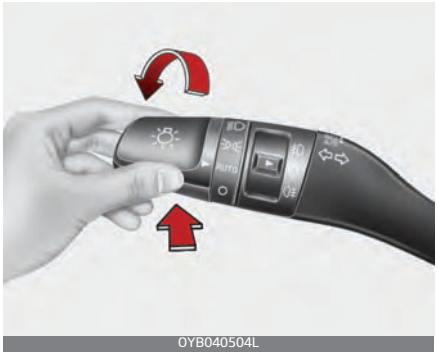
OYB040504L

High Beam Assist is a function that automatically adjusts the headlamp range (switches between high beam and low beam) according to the brightness of other vehicles and road conditions.

Operating condition

1. Place the light switch in the AUTO position.
2. Turn on the high beam by pushing the lever away from you.
   High Beam Assist (AUTO) indicator will illuminate.
3. High Beam Assist will turn on when vehicle speed is above 45kph (28mph).
   - If the lever is pushed away when High Beam Assist is operating, High Beam Assist will turn off and the high beam will be on continuously. High Beam Assist (AUTO) indicator will turn off.
   - If the lever is pulled towards you when the high beam is on with operating High Beam Assist, High Beam Assist will turn off.
4. If the light switch is placed to the headlamp position, High Beam Assist will turn off and the low beam will be on continuously.

The high beam switches to low beam in the below conditions.

- When High Beam Assist is off.
- When the light switch is not in the AUTO position.
- When the headlamp is detected from the on-coming vehicle.
- When the tail lamp is detected from the front vehicle.
- When the surrounding is bright enough high beams are not needed.
- When streetlights or other lights are detected.
- When vehicle speed is below 35km/h (22 mph).
- When headlamp / taillamp of bicycle/motorcycle is detected.

⚠ CAUTION

The function may not operate normally in the below conditions.

- When the light from the oncoming or front vehicle is not detected because of lamp damage, hidden from sight, etc.
- When the lamp of the on-coming or front vehicle is covered with dust, snow or water.
- When the light from the oncoming or front vehicle is not detected because of exhaust fume, smoke, fog, snow, etc.
- When the front window is covered with foreign matters such as ice, dust, fog, or is damaged.
- When there is a similar shape lamp with the front vehicle's lamps.
- When it is hard to see because of fog, heavy rain or snow.
- When the headlamp is not repaired or replaced at an authorized dealer.
- When headlamp aiming is not properly adjusted.

- When driving on a narrow curved road or rough road.
- When driving downhill or uphill.
- When only part of the vehicle in front is visible on a crossroad or curved road.
- When there is a traffic light, reflecting sign, flashing sign or mirror.
- When the road conditions are bad such as being wet or covered with snow.
- When the front vehicle's headlamps are off but the fog lamps on.
- When a vehicle suddenly appears from a curve.
- When the vehicle is tilted from a flat tire or being towed.
- When Lane keeping Assist function warning light illuminates. (if equipped)

⚠ WARNING

- Do not place any accessories, stickers or tint the windshield.
- Have the windshield glass replaced from an authorized dealer.
- Do not remove or impact related parts of High Beam Assist.
- Be careful that water doesn't get into High Beam Assist unit.
- Do not place objects on the dashboard that reflects light such as mirrors, white paper, etc. The system may malfunction if sunlight is reflected.
- At times, High Beam Assist may not work properly, always check the road conditions for your safety. When the system does not operate normally, manually change between the high beam and low beam.

Turn signals and lane change signals

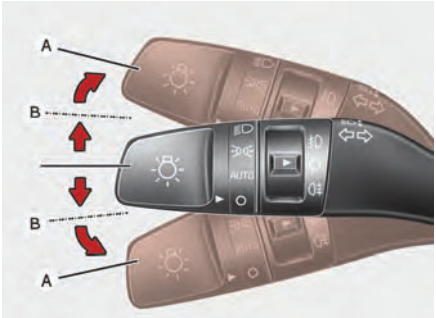

OYB040420L

The ignition switch must be on for the turn signals to function. To turn on the turn signals, move the lever up or down (A).

The green arrow indicators on the instrument panel indicate which turn signal is operating. They will selfcancel after a turn is completed.

If the indicator continues to flash after a turn, manually return the lever to the 0 (OFF) position.

To signal a lane change, move the turn signal lever slightly and hold it

in position (B). The lever will return to the 0 (OFF) position when released.

If an indicator stays on and does not flash or if it flashes abnormally, one of the turn signal bulbs may be burned out and will require replacement.

One-touch lane change function

To activate an one-touch lane change function, move the turn signal lever slightly and then release it. The lane change signals will blink 3 times.

NOTICE

If an indicator flash is abnormally quick or slow, a bulb may be burned out or have a poor electrical conne tion in the circuit.

Front fog light (if equipped)



OYB040422L

Fog lights are used to provide improved visibility when visibility is poor due to fog, rain or snow, etc. The fog lights will turn on when the fog light switch (1) is turned on after the parklight is turned on.

To turn the front fog lights off, turn the front fog light switch to the on position again.

CAUTION

When in operation, the fog lights consume large amounts of vehicle electrical power. Only use the fog lights when visibility is poor.

Rear fog light (if equipped)



OYB040424L

To turn the rear fog lights on, turn the rear fog light switch (1) to the on position when the headlight is turned on.

To turn the rear fog lights off, turn the rear fog light switch to the on position again.

✻ NOTICE

Rear fog light is only on the driver's side (if equipped).

Headlight leveling device

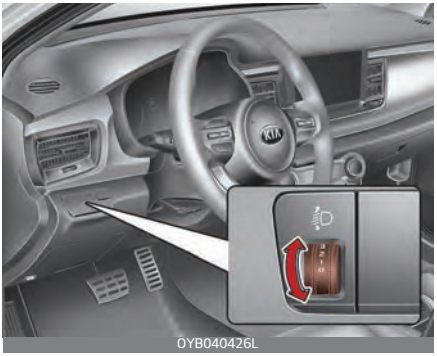

To adjust the headlight beam level according to the number of the passengers and loading weight in the luggage area, turn the beam leveling switch.

The higher the number of the switch position, the lower the headlight beam level. Always keep the headlight beam at the proper leveling position, or headlights may dazzle other road users.

Listed below are the examples of proper switch settings. For loading conditions other than those listed below, adjust the switch position so that the beam level may be the nearest as the condition obtained according to the list.

Loading condition	Switch position
Driver only	0
Driver + Front passenger	0
Full passengers (including driver)	1
Full passengers (including driver) + Maximum permissible loading	2
Driver + Maximum permissible loading	3

Wipers and washers

Front

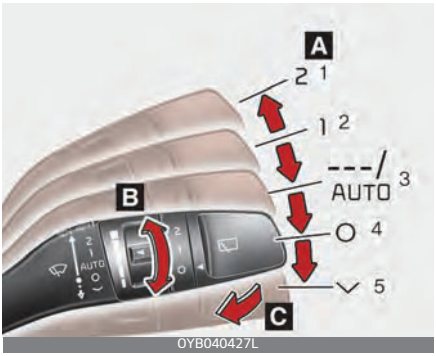

OYB040427L

Rear (if equipped)

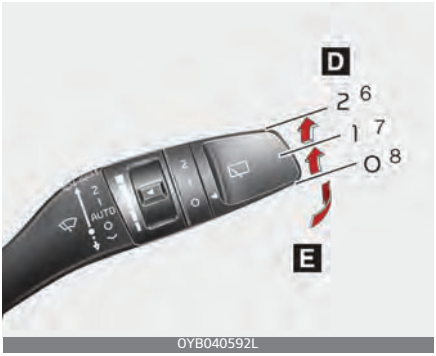

OYB040592L

A : Wiper speed control (front)

1. 2– High wiper speed
2. 1 – Low wiper speed
3. --- – Intermittent wipe
   AUTO* – Automatic control wipe
4. O – Off
5. ∨ – Single wipe

B : Intermittent control wipe time adjustment

C : Wash with brief wipes (front)*

D : Rear wiper/washer control*

6. 2 – Normal wiper operation
7. 1 – Intermittent wipe
8. O – Wiper is not in operation

E : Wash with brief wipes (rear)

* : if equipped

Windshield wipers (front)

Operates as follows when the ignition switch is turned ON.

1. 2 : Fast wiper speed
2. 1 :Normal wiper speed
3. ---/AUTO* : Wiper operates intermittently at the same wiping intervals. Use this mode in light rain or mist. To vary the speed setting, turn the speed control knob.
4. O : Wiper is not in operation
5. ∨ : For a single wiping cycle, move the lever to this position and release it. The wipers will operate continuously if the lever is held in this position.

NOTICE

If there is heavy accumulation of snow or ice on the windshield, defrost the windshield for about 10 minutes, or until the snow and/or ice is removed before using the windshield wipers to ensure proper operation. If you do not remove the snow and/or ice before using the wiper and washer, it may damage the wiper and washer system.

AUTO (Automatic) control (if equipped)

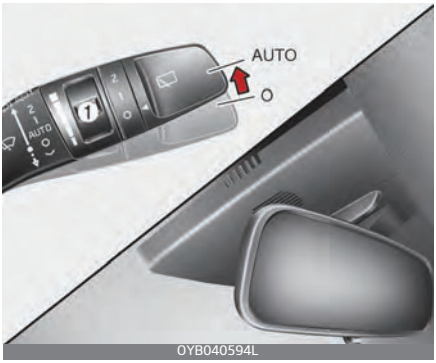

The rain sensor located on the upper end of the windshield glass senses the amount of rainfall and controls the wiping cycle for the proper interval. The more it rains, the faster the wiper operates. When the rain stops, the wiper stops.

To vary the speed setting, turn the speed control knob (1).

If the wiper switch is set in AUTO mode when the ignition switch is ON, the wiper will operate once to perform a self-check of the system. Set the wiper to (0) position when the wiper is not in use.

CAUTION

When the ignition switch is ON and the windshield wiper switch is placed in the AUTO mode, use caution in the following situations to avoid any injury to the hands or other parts of the body:

- Do not touch the upper end of the windshield glass facing the rain sensor.
- Do not wipe the upper end of the windshield glass with a damp or wet cloth.
- Do not put pressure on the windshield glass.

CAUTION

- When washing the vehicle, set the wiper switch in the (0) position to stop the auto wiper operation. The wiper may operate and be damaged if the switch is set in the AUTO mode while washing the vehicle.
- Do not remove the sensor cover located on the upper end of the passenger side windshield glass. Damage to system parts could

occur and may not be covered by your vehicle warranty.
- When starting the vehicle in winter, set the wiper switch in the off position. Otherwise, wipers may operate and ice may damage the windshield wiper blades. Always remove all snow and ice and defrost the windshield properly prior to operating the windshield wipers.

Windshield washers (front)

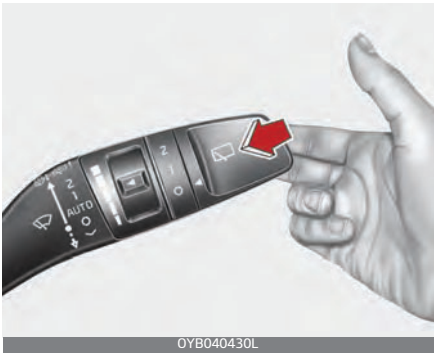

0YB040430L

In the (0) position, pull the lever gently toward you to spray washer fluid on the windshield and to run the wipers 1-3 cycles.

Use this function when the windshield is dirty.

The spray and wiper operation will continue until you release the lever.

If the washer does not work, check the washer fluid level. If the fluid level is not sufficient, you will need to add appropriate non-abrasive windshield washer fluid to the washer reservoir.

The reservoir filler neck is located in the front of the engine compartment on the passenger side.

⚠ CAUTION

To prevent possible damage to the washer pump, do not operate the washer when the fluid reservoir is empty.

⚠ WARNING

Do not use the washer in freezing temperatures without first warming the windshield with the defrosters; the washer solution could freeze on the windshield and obscure your vision.

⚠ CAUTION

- To prevent possible damage to the wipers or windshield, do not operate the wipers when the windshield is dry.
- To prevent damage to the wiper blades, do not use gasoline, kerosene, paint thinner, or other solvents on or near them.
- To prevent damage to the wiper arms and other components, do not attempt to move the wipers manually.

- To prevent possible damage to the wipers and washer system, use anti-freezing washer fluids in the winter season or cold weather.

Rear window wiper and washer switch (if equipped)



OYB040431L

The rear window wiper and washer switch is located at the end of the wiper and washer switch lever. Turn the switch to desired position to operate the rear wiper and washer.

6. 2/HI – Normal wiper operation
7. 1/LO/ON – Intermittent wipe
8. 0/OFF – Wiper is not in operation

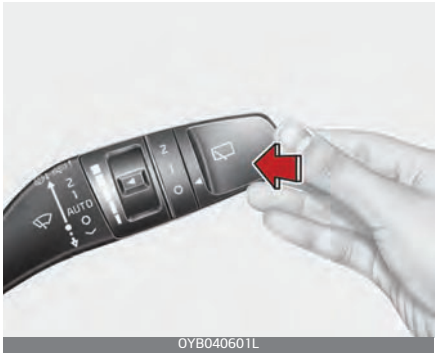

OYB040601L

Push the lever away from you or turn the wiper lever switch upwards twice to spray rear washer fluid and to run the rear wipers 1~3 cycles.The spray and wiper operation will continue until you release the lever.

Interior light

⚠ CAUTION

Do not use the interior lights for extended periods when engine is not running.
It may cause battery discharge.

⚠ WARNING

Do not use the interior lights when driving in the dark. Accidents could happen because the view may be obscured by interior lights.

Map lamp

Type A



Type B

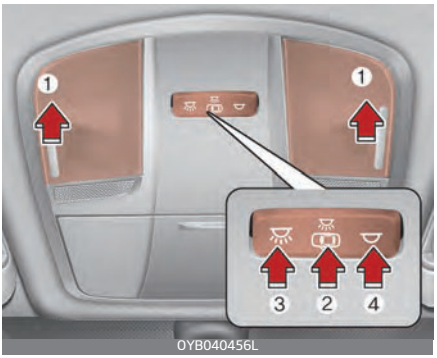

- (1) : Press the lamps to turn the front map lamps on and off.
- (2) :
  - The map lamp and room lamp comes on when a door is opened. The lamps go out after approximately 30 seconds.
  - The map lamp and room lamp comes on for approximately 30 seconds when doors are unlocked with a transmitter or smart key as long as the doors are not opened.
  - The map lamp and room lamp will stay on for approximately 20 minutes if a door is opened with the ignition switch in the ACC or LOCK/OFF position.
  - The map lamp and room lamp will stay on continuously if the door is opened with the ignition switch in the ON position.
  - The map lamp and room lamp will go out immediately if the ignition switch is changed to

the ON position or all doors are locked.

– To turn off the DOOR mode, press the DOOR button (2) once again (not pressed).

NOTICE

The DOOR mode and ROOM mode can not be selected at a time.

Front Map Lamp:

(3): Press this switch to turn the front map lamps on.

(4): Press this switch to turn the front map lamps off.

Room lamp


OYB040404L

- : The light stays on at all times.

Luggage room lamp

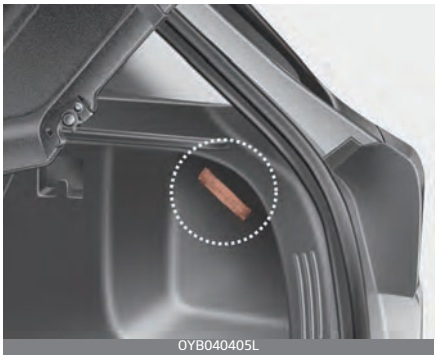
OYB040405L

The luggage room lamp comes on when the tailgate is opened.

CAUTION

The luggage room lamp comes on as long as the tailgate opens. To prevent unnecessary charging system drain, close the tailgate securely after using the luggage room.

Vanity mirror lamp (if equipped)


OYB040406L

Push the switch to turn the light on or off.

- : The lamp will turn on if this button is pressed.
- ○ : The lamp will turn off if this button is pressed.

⚠ CAUTION

Vanity mirror lamp

Always have the switch in the off position when the vanity mirror lamp is not in use. If the sun visor is closed without the lamp off, it may discharge the battery or damage the sun visor.

Glove box lamp (if equipped)

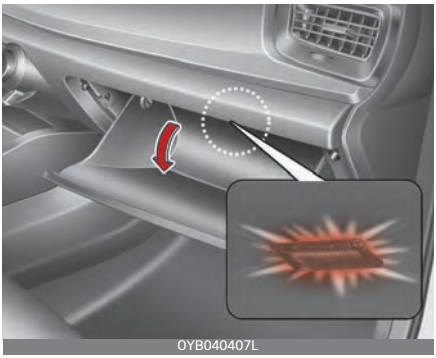
OYB040407L

The glove box lamp comes on when the glove box is opened.

⚠ CAUTION

To prevent unnecessary charging system drain, close the glove box securely after using the glove box.

Defroster

⚠ CAUTION

To prevent damage to the conductors bonded to the inside surface of the rear window, never use sharp instruments or window cleaners containing abrasives to clean the window.

✻ NOTICE

If you want to defrost and defog the front windshield, refer to "Windshield defrosting and defogging" on page 4-142.

Rear window defroster

Type A



OYB040327L

Type B



OYB040324L

The defroster heats the window to remove frost, fog and thin ice from the rear window, while the engine is running.

To activate the rear window defroster, press the rear window defroster button.

The indicator on the rear window defroster button illuminates when the defroster is ON.

If there is heavy accumulation of snow on the rear window, brush it off before operating the rear defroster.

The rear window defroster automatically turns off after approximately 20 minutes or when the ignition switch is turned off. To turn off the defroster, press the rear window defroster button again.

Outside rearview mirror defroster (if equipped)

If your vehicle is equipped with the outside rearview mirror defrosters, they will operate at the same time you turn on the rear window defroster.

Manual climate control system (if equipped)



OYB040328L

1. Fan speed control knob
2. Mode selection knob
3. Temperature control knob
4. Air conditioning button (if equipped)
5. Rear window defroster button
6. Air intake control button

⚠ CAUTION

Operating the blower when the ignition switch is in the ON position could cause the battery to discharge. Operate the blower when the engine is running.

Heating and air conditioning

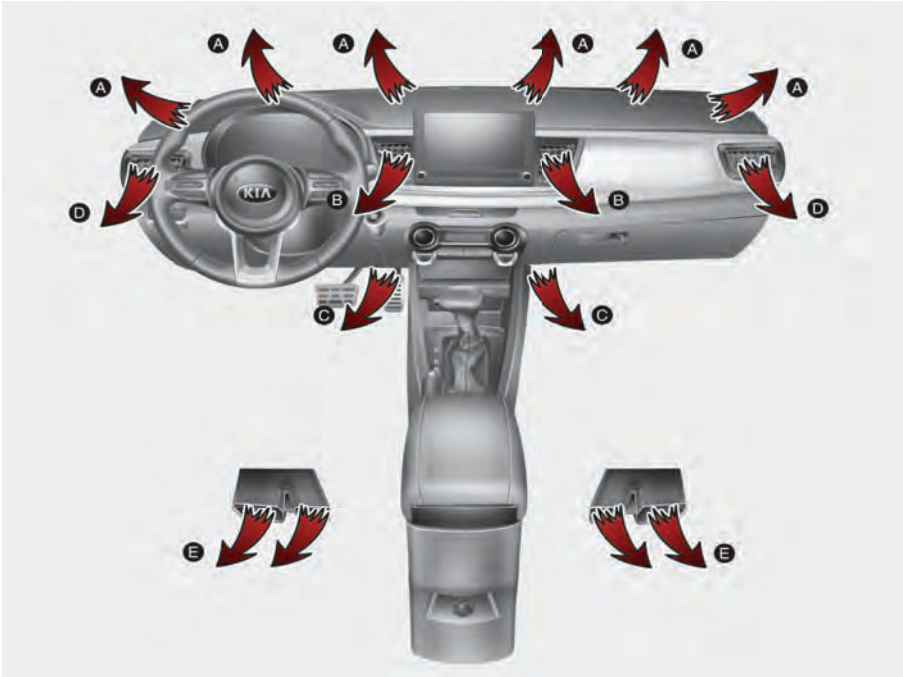

OYB040302L

1. Start the engine.
2. Set the mode to the desired position.
   For improving the effectiveness of heating and cooling;
   - Heating:
   - Cooling:
3. Set the temperature control to the desired position.
4. Set the air intake control to the outside (fresh) air position.
5. Set the fan speed control to the desired speed.
6. If air conditioning is desired, turn the air conditioning (if equipped) system on.

Mode selection


OYB040303L

The mode selection knob controls the direction of the air flow through the ventilation system.

Air can be directed to the floor, dashboard outlets, or windshield. Five symbols are used to represent Face, Bi-Level, Floor, Floor-Defrost and Defrost air position.

Face-Level (B, D)

Air flow is directed toward the upper body and face. Additionally, each outlet can be controlled to direct the air discharged from the outlet.

Bi-Level (B, D, C, E)

Air flow is directed towards the face and the floor.

Floor-Level (C, E, A, D)

Most of the air flow is directed to the floor, with a small amount of the air being directed to the windshield and side window defrosters.

Floor/Defrost-Level (A, C, D, E)

Most of the air flow is directed to the floor and the windshield with a small amount directed to the side window defrosters.

Defrost-Level (A, D)

Most of the air flow is directed to the windshield with a small amount of air directed to the side window defrosters.

Instrument panel vents

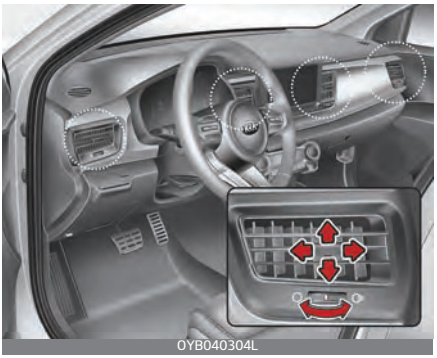
OYB040304L

The outlet vents can be opened or closed separately using the thumbwheel. To close the vent, rotate it downward to the maximum position.

Also, you can adjust the direction of air delivery from these vents using the vent control lever as shown.

Temperature control



OYB040305L

The temperature control knob allows you to control the temperature of the air flowing from the ventilation system.To change the air temperature in the passenger compartment, turn the knob to the right position for warm and hot air or left position for cooler air.

Air intake control



OYB040306L

The air intake control is used to select the outside (fresh) air position or recirculated air position.

To change the air intake control position, press the control button.

Recirculated air position



With the recirculated air position selected, air from the passenger compartment will be drawn through the heating system and heated or cooled according to the function selected.

Outside (fresh) air position



With the outside (fresh) air position selected, air enters the vehicle from outside and is heated or cooled according to the function selected.

✻ NOTICE

Prolonged operation of the heater in the recirculated air position (without air conditioning selected) may cause fogging of the windshield and side windows and the air within the passenger compartment may become stale.

In addition, prolonged use of the air conditioning with the recirculated air position selected will result in

excessively dry air in the passenger compartment.

⚠ WARNING

- Continue using the climate control system in the recirculated air position may allow humidity to increase inside the vehicle which may fog the glass and obscure visibility.
- Do not sleep in a vehicle with the air conditioning or heating system on. It may cause serious harm or death due to a drop in the oxygen level and/or body temperature.
- Continue using the climate control system in the recirculated air position can cause drowsiness or sleepiness, and loss of vehicle control. Set the air intake control to the outside (fresh) air position as much as possible while driving.

Fan speed control



OYB040307L

The ignition switch must be in the ON position for fan operation.

The fan speed control knob allows you to control the fan speed of the air flowing from the ventilation system. To change the fan speed, turn the knob to the right for higher speed or left for lower speed.

Setting the fan speed control knob to the "0" position turns off the fan.

To turn off the blowers



OYB040308L

To turn off the blowers, turn the fan speed control knob to the "0" position.

Air conditioning (A/C) (if equipped)



Press the A/C button to turn the air conditioning system on (indicator light will illuminate). Press the button again to turn the air conditioning system off.

System operation

Ventilation

1. Set the mode to the position.
2. Set the air intake control to the outside (fresh) air position.
3. Set the temperature control to the desired position.
4. Set the fan speed control to the desired speed.

Heating

1. Set the mode to the position.
2. Set the air intake control to the outside (fresh) air position.
3. Set the temperature control to the desired position.
4. Set the fan speed control to the desired speed.
5. If dehumidified heating is desired, turn the air conditioning system (if equipped) on.

- If the windshield fogs up, set the mode to the or position.

Operation Tips

- To keep dust or unpleasant fumes from entering the vehicle through the ventilation system, temporarily set the air intake control to the recirculated air position. Be sure to return the control to the fresh air position when the irritation has passed to keep fresh air in the vehicle. This will help keep the driver alert and comfortable.
- Air for the heating/cooling system is drawn in through the grilles just ahead of the windshield. Care should be taken that these are not blocked by leaves, snow, ice or other obstructions.
- To prevent interior fog on the windshield, set the air intake control to the fresh air position and fan speed to the desired position, turn on the air conditioning system, and adjust the temperature control to desired temperature.

Air conditioning

Kia Air Conditioning Systems are filled with environmentally friendly refrigerant*.

1. Start the engine. Push the air conditioning button.

2. Set the mode to the position.
3. Set the air intake control to the outside air or recirculated air position.
4. Adjust the fan speed control and temperature control to maintain maximum comfort.

* : Your vehicle is filled with R-134a or R-1234yf according to the regulation in your country at the time of producing. You can find out which air conditioning refrigerant is applied your vehicle at the label inside of engine room. Refer to "Refrigerant label (if equipped)" on page 8-15 for more detail location of air conditioning refrigerant label.

⚠ CAUTION

- The refrigerant system should only be serviced by trained and certified technicians to insure proper and safe operation.
- The refrigerant system should be serviced in a well-ventilated place.
- The air conditioning evaporator (cooling coil) shall never be repaired or replaced with one removed from a used or salvaged vehicle and new replacement MAC evaporators shall be certified (and labeled) as meeting SAE Standard J2842.

✻ NOTICE

- When using the air conditioning system, monitor the temperature gauge closely while driving up hills or in heavy traffic when outside temperatures are high. Air conditioning system operation may cause engine overheating. Continue to use the blower fan but turn the air conditioning system off if the temperature gauge indicates engine overheating.
- When opening the windows in humid weather air conditioning may create water droplets inside the vehicle. Since excessive water droplets may cause damage to electrical equipment, air conditioning should only be used with the windows closed.

Air conditioning system operation tips

- If the vehicle has been parked in direct sunlight during hot weather, open the windows for a short time to let the hot air inside the vehicle escape.
- To help reduce moisture inside of the windows on rainy or humid days, decrease the humidity inside the vehicle by operating the air conditioning system.
- During air conditioning system operation, you may occasionally notice a slight change in engine

speed as the air conditioning compressor cycles. This is a normal system operation characteristic.
- Use the air conditioning system every month only for a few minutes to ensure maximum system performance.
- When using the air conditioning system, you may notice clear water dripping (or even puddling) on the ground under the passenger side of the vehicle. This is a normal system operation characteristic.
- Operating the air conditioning system in the recirculated air position provides maximum cooling, however, continual operation in this mode may cause the air inside the vehicle to become stale.
- During cooling operation, you may occasionally notice a misty air flow because of rapid cooling and humid air intake. This is a normal system operation characteristic.

Activate upon Washer Fluid Use (if equipped)

To prevent the odor from entering to inside the vehicle, the ventilation system changes to Recirculated Air Mode for a while when the windshield washer fluid sprayed. However, at low outside temperature, to prevent from windshield fogging, the system continues to outside air mode.

System setting

1. ENGINE START/STOP button is On or ignition switch ON.
2. Select Floor-Level ( ) air flow direction by pressing Mode Selection button.
3. With pressing Air Conditioning button, press the Recirculated Air button more than 4 times within 2 seconds.
4. If the system is set up, the indicator on Recirculated Air button will blinks 6 times.

System cancellation

1. ENGINE START/STOP button is On or ignition switch ON.
2. Select Floor-Level ( ) air flow direction by pressing Mode Selection button.
3. With pressing Air Conditioning button, press the Recirculated Air button more than 4 times within 2 seconds.
4. If the system is cancelled, the indicator on Recirculated Air button will blinks 3 times.

Activation on washer fluid is activated when you select 'Settings → Vehicle → Climate → Recirculate Air → Activate upon Washer Fluid Use' from the Settings menu to turn on Activate upon Washer Fluid Use and deselect to turn off the function.

Climate control air filter

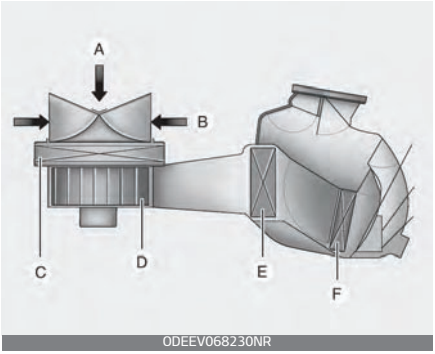

ODEEV068230NR

A : Outside air

B : Recirculated air

C : Climate control air filter

D : Blower

E : Evaporator core

F : Heater core

The climate control air filter installed behind the glove box filters the dust or other pollutants that come into the vehicle from the outside through the heating and air conditioning system.

If dust or other pollutants accumulate in the filter over a period of time, the air flow from the air vents may decrease, resulting in moisture accumulation on the inside of the windshield even when the outside (fresh) air position is selected. If this happens, have the climate control air filter replaced by a professional workshop. Kia recommends to visit an authorized Kia dealer/service partner.

* NOTICE

- Replace the filter according to the Maintenance Schedule.
  If the vehicle is being driven in severe conditions such as dusty or rough roads, more frequent air conditioner filter inspections and changes are required.
- When the air flow rate suddenly decreases, have the system checked by a professional workshop. Kia recommends to visit an authorized Kia dealer/service partner.

Air Conditioning refrigerant label

Example – Type A



OYB040568L

Example – Type B



OYB040569L

* The actual Air Conditioning refrigerant label in the vehicle may differ from the illustration.

Each symbols and specification on air conditioning refrigerant label means as below ;

1. Classification of refrigerant
2. Amount of refrigerant
3. Classification of Compressor lubricant
4. Caution
5. Flammable Refrigerant
6. To requires Registered Technician to service Air Conditioning system
7. Service manual

Type A

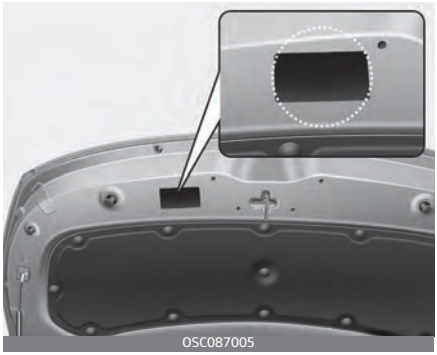
OSC087005

Type B

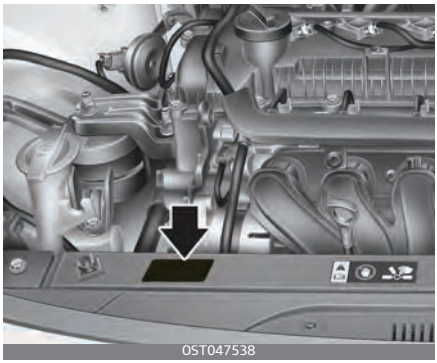
OST047538

The refrigerant label is located :

- Type A : The underside of the hood
- Type B : The front of the engine room.

Checking the amount of air conditioner refrigerant and compressor lubricant

When the amount of refrigerant is low, the performance of the air conditioning is reduced. Overfilling also has a bad influence on the air conditioning system.

Therefore, if abnormal operation is found, have the system inspected by a professional workshop.

Kia recommends to visit an authorized Kia dealer/service partner.

⚠ WARNING

Vehicles equipped with R-134a

Because the refrigerant is at very high pressure, the air conditioning system should only be serviced by trained and certified technicians. It is important that the correct type and amount of oil and refrigerant is used.

Otherwise, it may cause damage to the vehicle and personal injury.

⚠ WARNING

Vehicles equipped with R-1234yf



Since the refrigerant is mildly flammable and operated at high pressure, the air conditioning system should only be serviced by trained and certified technicians.

It is important that the correct type and amount of oil and refrigerant are used.

All refrigerants should be reclaimed with proper equipment.

Venting refrigerants directly to the atmosphere is harmful to individuals and environment.

Failure to heed these warnings can lead to serious injuries.

Sunroof inside air recirculation (if equipped)

The outside (fresh) air position is automatically selected, when the sunroof is opened.

When you select the recirculated air position, the system maintains the recirculated air position for 3 minutes and then automatically converts to the outside (fresh) air position.

When the sunroof is closed, the air intake position will return to the original position that was selected.

Automatic climate control system (if equipped)



OYB040326L

1. Temperature control knob
2. AUTO (automatic control) button
3. Climate control display
4. Fan speed control knob
5. OFF button
6. Front windshield defroster button
7. Rear window defroster button
8. Mode selection button
9. Air conditioning button (if equipped)
10. Air intake control button

⚠ CAUTION

Operating the blower when the ignition switch is in the ON position could cause the battery to discharge. Operate the blower when the engine is running.

Automatic heating and air conditioning

1. Push the AUTO button. The modes, fan speeds, air intake and air-conditioning will be controlled automatically according to the temperature setting.



OYB040313L

2. Set the temperature control knob to set the desired temperature.



OYB040314L

NOTICE

- To turn the automatic operation off, select any button or switch of the following:
  - Mode selection button
  - Air conditioning button
  - Front windshield defroster button (Press the button one more time to deselect the front windshield defroster function. The AUTO sign will illuminate on the information display once again.)
  - Air intake control button
  - Fan speed control knob

  The selected function will be controlled manually while other functions operate automatically.
- For your convenience and to improve the effectiveness of the climate control, use the AUTO button and set the temperature to 23°C (73°F).

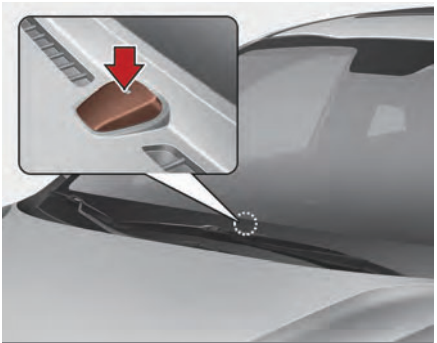
OYB040437L

NOTICE

Never place anything over the sensor located on the instrument panel to ensure better control of the heating and cooling system.

Manual heating and air conditioning

The heating and cooling system can be controlled manually by pushing buttons other than the AUTO button. In this case, the system works sequentially according to the order of buttons selected.

When pressing any button (or turning any knob) except the AUTO button while using automatic operation, the functions not selected will be controlled automatically.

1. Start the engine.
2. Set the mode to the desired position.

   To improve the effectiveness of heating and cooling:
   - Heating:

- Cooling:

3. Set the temperature control to the desired position.
4. Set the air intake control to the outside (fresh) air position.
5. Set the fan speed control to the desired speed.
6. If air conditioning is desired, turn the air conditioning system on.

Press the AUTO button in order to convert to full automatic control of the system.

Mode selection



The mode selection button controls the direction of the air flow through the ventilation system.

The air flow outlet port is converted as follows:

For Europe



Except Europe



Refer to the illustration in the "Manual climate control system" on page 4-144.

Floor & Defrost (A, C, D, E)

Most of the air flow is directed to the floor and the windshield with a small amount directed to the side window defrosters.

Face-Level (B, D)

Air flow is directed toward the upper body and face. Additionally, each outlet can be controlled to direct the air discharged from the outlet.

Bi-Level (B, D, C, E)

Air flow is directed towards the face and the floor.

Floor-Level (C, A, D, E)

Most of the air flow is directed to the floor, with a small amount of the air being directed to the windshield, side window defrosters and side air vents.

Defrost mode



OYB040321L

When you select the defrost mode, the following system settings will be made automatically:

- The air conditioning system will be turned on.
- The outside(fresh) air position will be selected.
- The fan speed will be set to the high speed.

To turn the defrost mode off, press the mode button or defrost button again or AUTO button.

Instrument panel vents

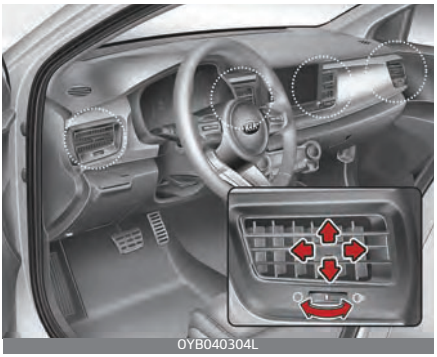
OYB040304L

The outlet port can be opened or closed separately using the horizontal thumbwheel. To close the vent, rotate it downward to the maximum position. To open the vent, rotate it upward to the desired position.

Also, you can adjust the direction of air delivered from these vents using the vent control lever as shown.

Temperature control



OYB040314L

The temperature will increase to the maximum (HI) by turning the knob to the right extremely.

The temperature will decrease to the minimum (Lo) by turning the knob to the left extremely.

When turning the knob, the temperature will increase or decrease by 0.5°C/1°F. When set to the lowest temperature setting, the air conditioning will operate continuously.

Temperature conversion

You can switch the temperature mode between Centigrade to Fahrenheit as follows:

While pressing the OFF button, press the AUTO button for 4 seconds or more.

The display will change from Centigrade to Fahrenheit, or from Fahrenheit to Centigrade.

If the battery has been discharged or disconnected, the temperature mode display will reset to Centigrade.

Air intake control



OYB040322L

This is used to select the outside (fresh) air position or recirculated air position.

To change the air intake control position, press the control button.

Recirculated air position



With the recirculated air position selected, air from the passenger compartment will be drawn through the heating system and heated or cooled according to the function selected.

Outside (fresh) air position



With the outside (fresh) air position selected, air enters the vehicle from outside and is heated or cooled according to the function selected.

✻ NOTICE

Prolonged operation of the heater in the recirculated air position (without air conditioning selected) may cause fogging of the windshield and side windows and the air within the passenger compartment may become stale.

In addition, prolonged use of the air conditioning with the recirculated air position selected will result in excessively dry air in the passenger compartment.

⚠ WARNING

- Continued climate control system operation in the recirculated air position may allow humidity to

increase inside the vehicle which may fog the glass and obscure visibility.
- Do not sleep in a vehicle with the air conditioning or heating system on. It may cause serious harm or death due to a drop in the oxygen level and/or body temperature.
- Continued climate control system operation in the recirculated air position can cause drowsiness or sleepiness, and loss of vehicle control. Set the air intake control to the outside (fresh) air position as much as possible while driving.

Fan speed control



OYB040315L

The fan speed can be set to the desired speed by operating the fan speed control knob.

The higher the fan speed is, the more air is delivered.

Pressing the OFF button turns off the fan.

Air conditioning (A/C) (if equipped)



OYB040316L

Press the A/C button to turn the air conditioning system on (indicator light will illuminate).

Press the button again to turn the air conditioning system off.

OFF mode

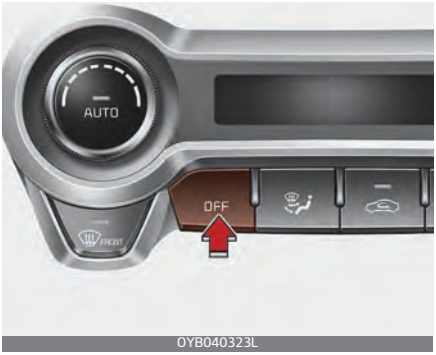

OYB040323L

Press the OFF button to turn off the air climate control system. However, you can still operate the air intake buttons as long as the ignition switch is in the ON position.

System operation

Ventilation

1. Set the mode to the position.
2. Set the air intake control to the outside (fresh) air position.
3. Set the temperature control to the desired position.
4. Set the fan speed control to the desired speed.

Heating

1. Set the mode to the position.
2. Set the air intake control to the outside (fresh) air position.
3. Set the temperature control to the desired position.
4. Set the fan speed control to the desired speed.
5. If dehumidified heating is desired, turn the air conditioning system (if equipped) on.

- If the windshield fogs up, set the mode to the or position.

Operation Tips

- To keep dust or unpleasant fumes from entering the vehicle through the ventilation system, temporarily set the air intake control to the recirculated air position. Be sure to return the control to the fresh air position when the irritation has passed to keep fresh air in the vehicle. This will help keep the driver alert and comfortable.
- Air for the heating/cooling system is drawn in through the grilles just ahead of the windshield. Care should be taken that these are not blocked by leaves, snow, ice or other obstructions.
- To prevent interior fog on the windshield, set the air intake control to the fresh air position and fan speed to the desired position, turn on the air conditioning system, and adjust the temperature control to desired temperature.

Air conditioning

Kia Air Conditioning Systems are filled with environmentally friendly refrigerant*.

1. Start the engine. Push the air conditioning button.
2. Set the mode to the position.
3. Set the air intake control to the outside air or recirculated air position.
4. Adjust the fan speed control and temperature control to maintain maximum comfort.

* : Your vehicle is filled with R-134a or R-1234yf according to the regulation in your country at the time of producing. You can find out which air conditioning refrigerant is applied your vehicle at the label inside of engine room. Refer to "Refrigerant label (if equipped)" on page 8-15 for more detail location

of air conditioning refrigerant label.

⚠ CAUTION

- The refrigerant system should only be serviced by trained and certified technicians to insure proper and safe operation.
- The refrigerant system should be serviced in a well-ventilated place.
- The air conditioning evaporator (cooling coil) shall never be repaired or replaced with one removed from a used or salvaged vehicle and new replacement MAC evaporators shall be certified (and labeled) as meeting SAE Standard J2842.

✻ NOTICE

- When using the air conditioning system, monitor the temperature gauge closely while driving up hills or in heavy traffic when outside temperatures are high. Air conditioning system operation may cause engine overheating. Continue to use the blower fan but turn the air conditioning system off if the temperature gauge indicates engine overheating.
- When opening the windows in humid weather air conditioning may create water droplets inside the vehicle. Since excessive water droplets may cause damage to electrical equipment, air conditioning should only be used with the windows closed.

Air conditioning system operation tips

- If the vehicle has been parked in direct sunlight during hot weather, open the windows for a short time to let the hot air inside the vehicle escape.
- To help reduce moisture inside of the windows on rainy or humid days, decrease the humidity inside the vehicle by operating the air conditioning system.
- During air conditioning system operation, you may occasionally notice a slight change in engine speed as the air conditioning compressor cycles. This is a normal system operation characteristic.
- Use the air conditioning system every month only for a few minutes to ensure maximum system performance.
- When using the air conditioning system, you may notice clear water dripping (or even puddling) on the ground under the passenger side of the vehicle. This is a normal system operation characteristic.
- Operating the air conditioning system in the recirculated air position provides maximum cool-

ing, however, continual operation in this mode may cause the air inside the vehicle to become stale.
- During cooling operation, you may occasionally notice a misty air flow because of rapid cooling and humid air intake. This is a normal system operation characteristic.

Activate upon Washer Fluid Use (if equipped)

To prevent the odor from entering to inside the vehicle, the ventilation system changes to Recirculated Air Mode for a while when the windshield washer fluid sprayed. However, at low outside temperature, to prevent from windshield fogging, the system continues to outside air mode.

System setting

1. ENGINE START/STOP button is On or ignition switch ON.
2. Select Floor-Level ( ) air flow direction by pressing Mode Selection button.
3. With pressing Air Conditioning button, press the Recirculated Air button more than 4 times within 2 seconds.
4. If the system is set up, the indicator on Recirculated Air button will blinks 6 times.

System cancellation

1. ENGINE START/STOP button is On or ignition switch ON.
2. Select Floor-Level ( ) air flow direction by pressing Mode Selection button.
3. With pressing Air Conditioning button, press the Recirculated Air button more than 4 times within 2 seconds.
4. If the system is cancelled, the indicator on Recirculated Air button will blinks 3 times.

Activation on washer fluid is activated when you select 'Settings → Vehicle → Climate → Recirculate Air → Activate upon Washer Fluid Use' from the Settings menu to turn on Activate upon Washer Fluid Use and deselect to turn off the function.

Climate control air filter

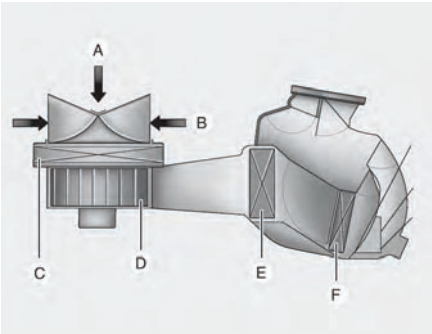

ODEEV068230NR

A : Outside air

B : Recirculated air

C : Climate control air filter

D : Blower

E : Evaporator core

F : Heater core

The climate control air filter installed behind the glove box filters the dust or other pollutants that come into the vehicle from the outside through the heating and air conditioning system.

If dust or other pollutants accumulate in the filter over a period of time, the air flow from the air vents may decrease, resulting in moisture accumulation on the inside of the windshield even when the outside (fresh) air position is selected. If this happens, have the climate control air filter replaced by a professional workshop. Kia recommends to visit an authorized Kia dealer/service partner.

NOTICE

- Replace the filter according to the Maintenance Schedule.
  If the vehicle is being driven in severe conditions such as dusty or rough roads, more frequent air conditioner filter inspections and changes are required.
- When the air flow rate suddenly decreases, have the system checked by a professional workshop. Kia recommends to visit an authorized Kia dealer/service partner.

Air Conditioning refrigerant label

Example – Type A



OYB040568L

Example – Type B



OYB040569L

* The actual Air Conditioning refrigerant label in the vehicle may differ from the illustration.

Each symbols and specification on air conditioning refrigerant label means as below ;

1. Classification of refrigerant
2. Amount of refrigerant

3. Classification of Compressor lubricant
4. Caution
5. Flammable Refrigerant
6. To requires Registered Technician to service Air Conditioning system
7. Service manual

Type A

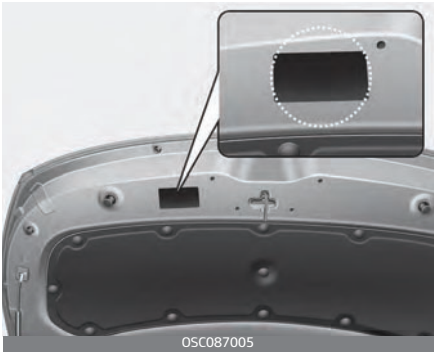
OSC087005

Type B

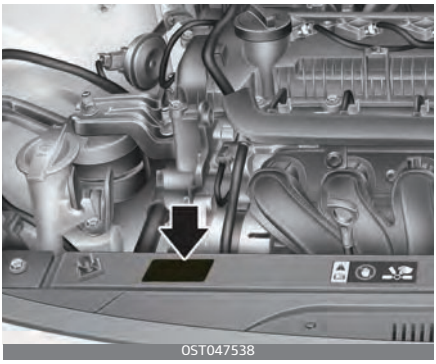
OST047538

The refrigerant label is located :

- Type A : The underside of the hood
- Type B : The front of the engine room.

Checking the amount of air conditioner refrigerant and compressor lubricant

When the amount of refrigerant is low, the performance of the air conditioning is reduced. Overfilling also has a bad influence on the air conditioning system.

Therefore, if abnormal operation is found, have the system inspected by a professional workshop.

Kia recommends to visit an authorized Kia dealer/service partner.

4

⚠ WARNING

Vehicles equipped with R-134a

Because the refrigerant is at very high pressure, the air conditioning system should only be serviced by trained and certified technicians. It is important that the correct type and amount of oil and refrigerant is used.

Otherwise, it may cause damage to the vehicle and personal injury.

⚠ WARNING

Vehicles equipped with R-1234yf

Since the refrigerant is mildly flammable and operated at high pressure, the air conditioning system should only be ser-

viced by trained and certified technicians.

It is important that the correct type and amount of oil and refrigerant are used.

All refrigerants should be reclaimed with proper equipment.

Venting refrigerants directly to the atmosphere is harmful to individuals and environment.

Failure to heed these warnings can lead to serious injuries.

Sunroof inside air recirculation (if equipped)

The outside (fresh) air position is automatically selected, when the sunroof is opened.

When you select the recirculated air position, the system maintains the recirculated air position for 3 minutes and then automatically converts to the outside (fresh) air position.

When the sunroof is closed, the air intake position will return to the original position that was selected.

Windshield defrosting and defogging

⚠ WARNING

Windshield heating

Do not use the  or  position during cooling operation in extremely humid weather. The difference between the temperature of the outside air and that of the windshield could cause the outer surface of the windshield to fog up, causing loss of visibility. In this case, set the mode selection knob or button to the position and fan speed control knob or button to the lower speed.

- For maximum defrosting, set the temperature control to the extreme right/hot position and the fan speed control to the highest speed.
- If warm air to the floor is desired while defrosting or defogging, set the mode to the floor–defrost position.
- Before driving, clear all snow and ice from the windshield, rear window, outside rear view mirrors, and all side windows.
- Clear all snow and ice from the hood and air inlet in the cowl grill to improve heater and defroster efficiency and to reduce the probability of fogging up the inside of the windshield.

Manual climate control system

To defog inside windshield

1. Select any fan speed except "0" position.
2. Select desired temperature.
3. Select the or position.
4. The outside (fresh) air and air conditioning will be selected automatically.



OYB040311L

If the air conditioning and outside (fresh) air position are not selected automatically, press the corresponding button manually.

To defrost outside windshield



OYB040312L

1. Set the fan speed to the highest (extreme right) position.
2. Set the temperature to the extreme hot position.
3. Select the position.
4. The outside (fresh) air and air conditioning will be selected automatically.

Automatic climate control system

To defog inside windshield



OYB040319L

1. Set the fan speed to the desired position.
2. Select desired temperature.
3. Press the defrost button ().
4. The air conditioning will be turned on according to the detected ambient temperature and outside (fresh) air position will be selected automatically.

If the air conditioning and outside (fresh) air position are not selected automatically, adjust the corresponding button manually. If the position is selected, lower fan

speed is adjusted to a higher fan speed.

To defrost outside windshield



1. Set the fan speed to the highest (extreme right) position.
2. Set the temperature to the extreme hot (HI) position.
3. Press the defrost button ( ).
4. The air conditioning will be turned on according to the detected ambient temperature and outside (fresh) air position will be selected automatically.

If the position is selected, lower fan speed is adjusted to a higher fan speed.

Defogging logic (if equipped)

To reduce the possibility of fogging up the inside of the windshield, the air intake or air conditioning are controlled automatically according to certain conditions such as or position. To cancel or return to the defogging logic, do the following.

Manual climate control system

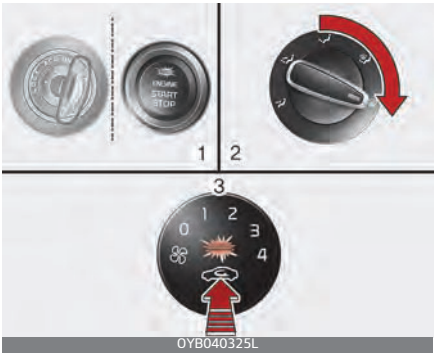

1. Turn the ignition switch to the ON position.
2. Turn the mode selection knob to the defrost position ( ).
3. Push the air intake control button at least 5 times within 3 seconds.

The indicator light in the air intake control button will blink 3 times. It indicates that the defogging logic is canceled or returned to the programmed status.

If the battery has been discharged or disconnected, it resets to the defog logic status.

Automatic climate control system



1. Turn the ignition switch to the ON position.
2. Select the defrost position pressing defrost button ( ).
3. While holding the air conditioning button (A/C) pressed, press the air intake control button at least 5 times within 3 seconds.

The A/C display blinks 3 times. It indicates that the defogging logic is canceled or returned to the programmed status.

If the battery has been discharged or disconnected, it is reset to the defog logic status.

Auto defogging system (Only for automatic climate control system) (if equipped)

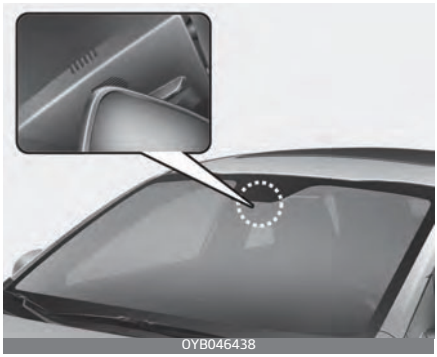

Auto defogging reduces the possibility of fogging up the inside of the windshield by automatically sensing the moisture of inside the windshield and air flow toward the windshield can increase.

The auto defogging system operates when the AUTO mode is on.

For Europe

If your vehicle is equipped with the auto defogging system, it is automatically activated when the conditions are met.

When the auto fogging system senses moisture inside of the windshield, air flow towards the windshield can increase.

However, if you would like to deactivate the auto defogging system, keep the front defroster button pressed longer than 3 seconds.

The “ADS OFF” symbol will be shown in the climate display to inform you that the system is deactivated.

To re-activate the auto defogging system again, follow the procedure mentioned above and the “ADS OFF” symbol will disappear.

If the battery has been disconnected or discharged, it resets to the auto defogging status.

Except Europe



This indicator illuminates when the auto defogging system senses the moisture of inside the windshield and operates.

If more moisture is in the vehicle, higher steps operate as follow.

Step 1 : Operating the air conditioning

Step 2 : Outside air position

Step 3 : Blowing air flow toward the windshield

Step 4 : Increasing air flow toward the windshield

If your vehicle is equipped with the auto defogging system, it is automatically activated when the conditions are met.

However, if you would like to deactivate the auto defogging system, keep the front defroster button pressed longer than 3 seconds.

The “ADS OFF” symbol will be shown in the climate display to inform you that the system is deactivated.

To re-activate the auto defogging system again, follow the procedure mentioned above and the “ADS OFF” symbol will disappear.

If the battery has been disconnected or discharged, it resets to the auto defogging status.

Storage compartments

These compartments can be used to store small items required by the driver or passengers.

⚠ CAUTION

- To avoid possible theft, do not leave valuables in the storage compartments.
- Always keep the storage compartment covers closed while driving. Do not attempt to place so many items in the storage compartment that the storage compartment cover cannot close securely.

⚠ WARNING

Flammable materials

Do not store cigarette lighters, propane cylinders, or other flammable/explosive materials in the vehicle. These items may catch fire and/or explode if the vehicle is exposed to hot temperatures for extended periods.

Center console storage (if equipped)

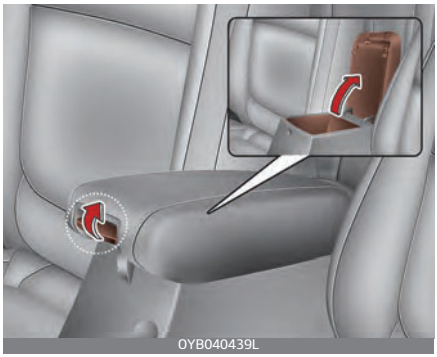
OYB040439L

These compartments can be used to store small items required by the driver or front passenger.

To open the center console storage pull up the lever.

Glove box

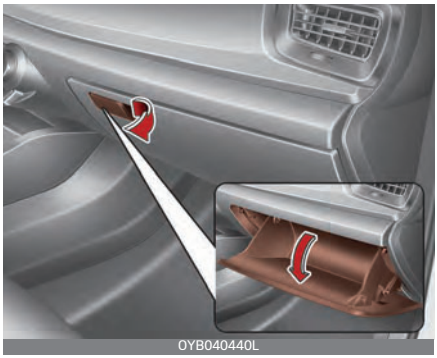
OYB040440L

To open the glove box, pull the handle and the glove box will automatically open. Close the glove box after use.

⚠ WARNING

To reduce the risk of injury in an accident or sudden stop, always keep the glove box door closed while driving.

⚠ CAUTION

Do not keep food in the glove box for a long time.

Sunglass holder

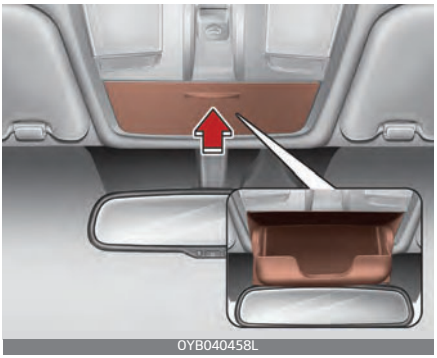
OYB040458L

To open the sunglass holder, press the cover and the holder will slowly open. Place your sunglasses with the lenses facing out. To close the sunglass holder, push it up.

⚠ WARNING

- Do not keep objects except sunglasses inside the sunglass holder. Such objects can be thrown from the holder in the event of a sudden stop or an accident, possibly injuring the passengers in the vehicle.
- Do not open the sunglass holder while the vehicle is moving. The rear view mirror of the vehicle can be blocked by an opened sunglass holder.
- Do not put the glasses forcibly into a sunglass holder to prevent breakage or deformation of the glasses. It may cause personal injury if you try to open it forcibly when the glasses are jammed in the holder.

Luggage net holder

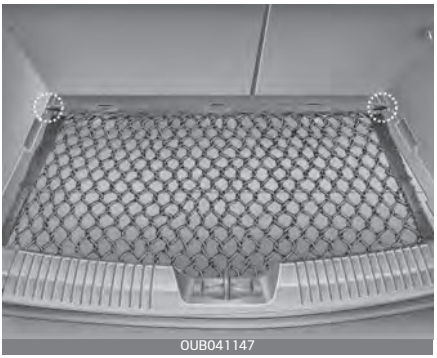
OUB041147

To keep items from shifting in the cargo area, you can use the 4 holders located in the cargo area to attach the luggage net (if equipped).

If necessary, Kia recommends to contact an authorized Kia dealer/ service partner.

⚠ CAUTION

To prevent damage to the goods or the vehicle, care should be taken when carrying fragile or bulky objects in the luggage compartment.

⚠ WARNING

Avoid eye injury. DO NOT overstretch the luggage net, ALWAYS keep your face and body out of the luggage net's recoil path. DO NOT use when the strap has visible signs of wear or damage.

Luggage board (if equipped)

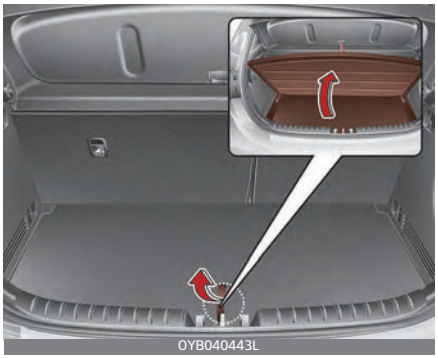
OYB040443L

You can place a first aid kit, a reflector triangle, tools, etc. in the box for easy access.

1. Grasp the handle on the top of the cover and lift it.
2. Fold the rear part of luggage board frontward.
3. Lift up luggage board frontward (Luggage board stand itself)

Increase cargo space (if equipped)

If you want to increase cargo space,

1. Grasp the handle on the top of the cover and lift it

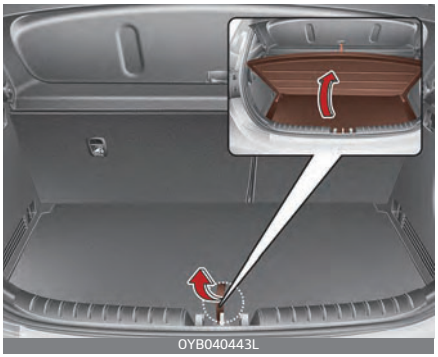
OYB040443L

2. Fold the rear part of the luggage board frontward



OYB040451L

3. Pull the luggage board hinge to the end of sliding slot and it will fall down lower to increase cargo space.

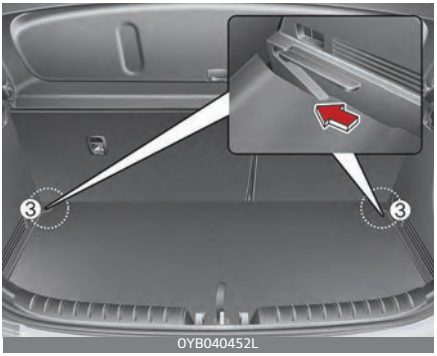

4. Slide it frontward (refer to the above pictures)

Interior features

Cigarette lighter (if equipped)

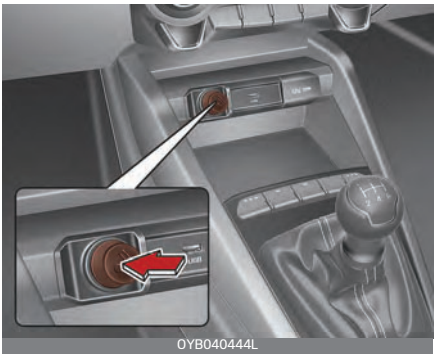

For the cigarette lighter to work, the ignition switch must be in the ACC position or the ON position.

To use the cigarette lighter, push it all the way into its socket. When the element has heated, the lighter will pop out to the "ready" position.

Kia recommends to use parts for replacement from an authorized Kia dealer/service partner.

⚠ WARNING

- Do not hold the lighter in after it is already heated because it will overheat.
- If the lighter does not pop out within 30 seconds, remove it to prevent overheating.
- Do not insert foreign objects into the socket of the cigarette lighter. It may damage the cigarette lighter.

⚠ CAUTION

The use of plug-in accessories (shavers, hand-held vacuums, and coffee pots, etc.) may damage the socket or cause electrical failure.

Ashtray (if equipped)

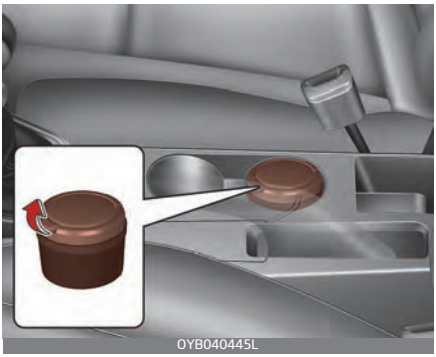

To use the ashtray, open the cover.

To clean or empty the ashtray, pull it out.

Use the ashtray by leaning it to the cup holder right beside.

⚠ WARNING

Ashtray use

- Do not use the vehicle's ashtrays as waste receptacles.
- Putting lit cigarettes or matches in an ashtray with other combustible materials may cause a fire.

Cup holder

⚠ WARNING

Hot liquids

- Do not place uncovered cups with hot liquid in the cup holder while the vehicle is in motion. If the hot liquid spills, you burn yourself. Such a burn to the driver could lead to loss of control of the vehicle.
- To reduce the risk of personal injury in the event of sudden stop or collision, do not place uncovered or unsecured bottles, glasses, cans, etc., in the cup holder while the vehicle is in motion.

⚠ WARNING

Keep cans or bottles out of direct sun light and do not put them in a vehicle that is heated up. It may explode.

✻ NOTICE

- Keep your drinks sealed while driving to prevent spilling your drink. If liquid spills, it may get into the vehicle's electrical/electronic system and damage electrical/electronic parts.
- When cleaning spilled liquids, do

not dry the cup holder at high temperature. This may damage the cup holder.

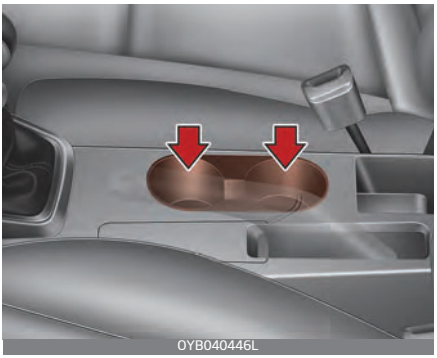

Cups or small beverage cans may be placed in the cup holders.

Sun visor

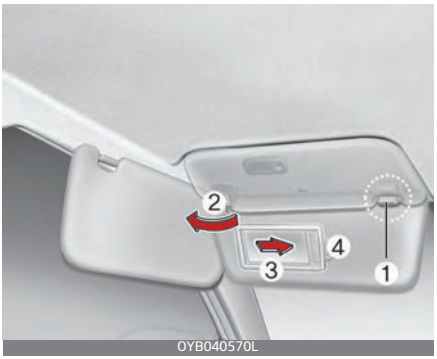

Use the sun visor to shield direct light through the front or side windows. To use the sun visor, pull it downward.

To use the sun visor for the side window, pull it downward, unsnap it from the bracket (1) and swing it to the side (2).

To use the vanity mirror, pull down the visor and slide the mirror cover (3).

The ticket holder (4) is provided for holding a tollgate ticket.

⚠ WARNING

For your safety, do not obstruct your vision when using the sun visor.

Seat warmer (if equipped)

Front seat

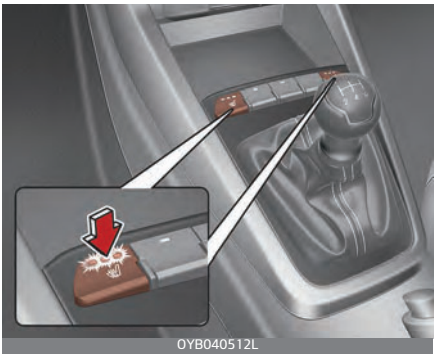

The seat warmer is provided to warm the front seats during cold weather. With the ignition switch in the ON position, push either of the switches to warm the driver's seat or the front passenger's seat.

During mild weather or under conditions where the operation of the seat warmer is not needed, keep the switches in the “OFF” position.

- Each time you press the switch, the temperature setting of the seat will change as follows :

Front seat



ODEEV068232NR

- The seat warmer defaults to the OFF position whenever the ignition switch is turned on.

NOTICE

With the seat warmer switch in the ON position, the heating system in the seat turns off or on automatically depending on the seat temperature.

CAUTION

- When cleaning the seats, do not use an organic solvent such as paint thinner, benzene, alcohol and gasoline. Doing so may damage the surface of the heater or seats.
- To prevent overheating the seat warmer, do not place anything on the seats that insulates against heat, such as blankets, cushions or seat covers while the seat warmer is in operation.
- Do not place heavy or sharp objects on seats equipped with seat warmers. Damage to the seat warming components could occur.
- Do not change the seat cover. It may damage the seat warmer or airventilation system.

WARNING

Seat warmer burns

Passengers should use extreme caution when using seat warmers due to the possibility of excess heating or burns. The seat warmer may cause burns even at low temperatures, especially if used for long periods of time. In particular, the driver must exercise extreme care for the following types of passengers:

1. Infants, children, elderly or handicapped persons, or hospital outpatients
2. Persons with sensitive skin or those that burn easily
3. Fatigued individuals
4. Intoxicated individuals
5. Individuals taking medication that can cause drowsiness or sleepiness (sleeping pills, cold tablets, etc.)

Power outlet

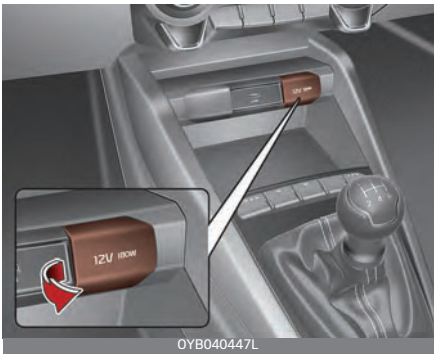

OYB040447L

The power outlet is designed to provide power for mobile telephones or other devices designed to operate with vehicle electrical systems. The devices should draw less than 10 amps with the engine running.

⚠ CAUTION

- Use the power outlet only when the engine is running an remove the accessory plug after use. Using the accessory plug for prolonged periods of time with the engine off could cause the battery to discharge.
- Only use 12V electric accessories which are less than 10A in electric capacity
- Adjust the air-conditioner or heater to the lowest operating level when using the power outlet.
- Close the cover when not in use.
- Some electronic devices can cause electronic interference when plugged into a vehicle's power outlet. These devices may cause excessive audio static and malfunctions in other electronic systems or devices used in your vehicle.
- Using electrical products which exceed the limited capacity might cause heating to the power outlet and wiring that could lead to an electrical breakdown.
- Always make sure the electrical part is firmly plugged into the power outlet. Incomplete plugging may cause electrical breakdown.
- Electrical products with a built-in battery might cause current flow, which could lead to malfunction of the electric/electronic device in your vehicle. Only use electrical products which include reverse current prevention.

⚠ WARNING

Do not put a finger or a foreign element (pin, etc.) into a power outlet and do not touch with a wet hand. You may get an electric shock.

USB charger (if equipped)



The USB charger is designed to recharge batteries of small size electrical devices using a USB cable. The electrical devices can be recharged when the Engine Start/ Stop button is in ACC/ON/START position.

The battery charging state may be monitored on the electrical device. Disconnect the USB cable from the USB port after use.

- Some devices are not supported for fast charging but will be charged with normal speed.
- Use the USB charger when the engine is running to prevent battery discharge.
- Only devices that fits the USB port can be used.
- The USB charger can be used only for battery charging purposes.
- Battery chargers cannot be charged.

Floor mat anchor(s)



When using a floor mat on the front floor carpet, make sure it attaches to the floor mat anchor(s) in your vehicle. This keeps the floor mat from sliding forward.

⚠ WARNING

The following must be observed when installing ANY floor mat to the vehicle.

- Ensure that the floor mats are securely attached to the vehicle's floor mat anchor(s) before driving the vehicle.
- Do not use ANY floor mat that cannot be firmly attached to the vehicle's floor mat anchors.
- Do not stack floor mats on top of one another (e.g. all-weather rubber mat on top of a carpeted floor mat). Only a single floor mat should be installed in each position.

IMPORTANT - Your vehicle was manufactured with driver's side

floor mat anchors that are designed to securely hold the floor mat in place. To avoid any interference with pedal operation, Kia recommends that only the Kia floor mat designed for use in your vehicle be installed.

Covering shelf trim

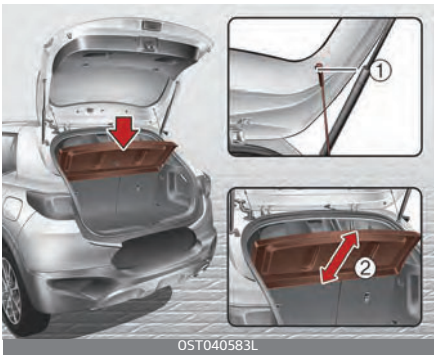

It is a cover for cargo in the trunk and allows you to place light objects on the top shelf. When opening the tailgate, the upper covering shelf trim may pull up. Remove the hook (1) hanging from the holder to use the shelf as its original position.

Detach the hook (1) from the holder, then pull it with force while tilting the shelf at an angle (about 50 degrees) (2) to remove the shelf completely.

Installation is in reverse order of removal.

NOTICE

- When removing the hook, be sure to lower the shelf with holding by hand.
- If the shelf has been completely detached, fix the shelf not to disturb driving.
- When opening the tailgate, the upper covering shelf trim may pull up. Move the objects on the shelf to a safe place to prevent them from falling.
- Do not apply excessive force or place heavy objects on the shelf. It may damage the shelf.

WARNING

- The objects on the top of the shelf may be thrown forward in case of a sudden stop or a collision. Do not place any objects which may cause fatal injury to the passengers.
- Only cargo is allowed in the trunk. Passengers must never board.
- When loading cargo, keep the vehicle balance by loading it forward as possible.

Shopping bag holder

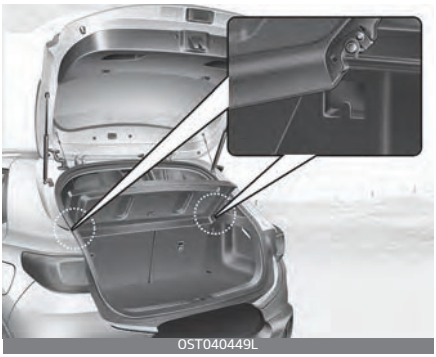
OST040449L

⚠ CAUTION

- Do not hang a bag weighing more than 3 kg (7 lbs.). It may cause damage to the shopping bag holder.
- Do not hang the frail objects when you drive rough road, the objects may be damaged.

Coat hook

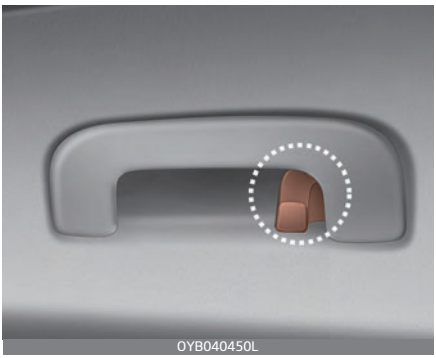
OYB040450L

To use the coat hook, pull down the upper portion of coat hook.

⚠ CAUTION

Do not hang heavy clothes, since those may damage the hook.

⚠ WARNING


OYB040578L

Do not hang other objects such as hangers or hard objects except clothes. Also, do not put heavy, sharp or breakable objects in the clothe pockets. In an accident or when the curtain air bag is inflated, it may cause vehicle damage or personal injury.

Exterior features

Roof rack (if equipped)

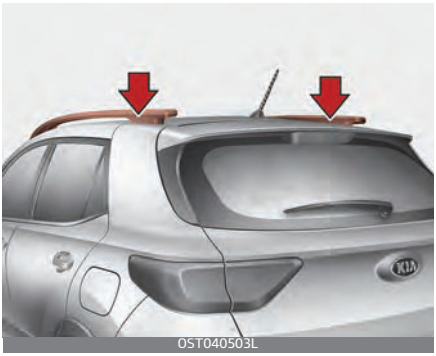

If the vehicle has a roof rack, you can load cargo on top of your vehicle.

Crossbars and fixing components needed to install the roof rack on your vehicle may be obtained from an authorized Kia dealer or other qualified shop.

✻ NOTICE

- The crossbars (if equipped) should be placed in the proper load carrying positions prior to placing items onto the roof rack.
- If the vehicle is equipped with a sunroof, be sure not to position cargo onto the roof rack in such a way that it could interfere with sunroof operation.
- When the roof rack is not being used to carry cargo, the crossbars may need to be repositioned if wind noise is detected.

⚠ CAUTION

- When carrying cargo on the roof rack, take the necessary precautions to make sure the cargo does not damage the roof of the vehicle.
- When carrying large objects on the roof rack, make sure they do not exceed the overall roof length or width.
- When you are carrying cargo on the roof rack, do not operate the sunroof (if equipped)

✻ NOTICE

- The following specification is the maximum weight that can be loaded onto the roof rack. Distribute the load as evenly as possible across the crossbars (if equipped) and roof rack and secure the load firmly.

ROOF RACK	75kg (165 lbs.) EVENLY DISTRIBUTED

  Loading cargo or luggage in excess of the specified weight limit on the roof rack may damage your vehicle.
- The vehicle center of gravity will be higher when items are loaded onto the roof rack. Avoid sudden

starts, braking, sharp turns, abrupt maneuvers or high speeds that may result in loss of vehicle control or rollover resulting in an accident.

- Always drive slowly and turn corners carefully when carrying items on the roof rack. Severe wind updrafts, caused by passing vehicles or natural causes, can cause sudden upward pressure on items loaded on the roof rack. This is especially true when carrying large, flat items such as wood panels or mattresses. This could cause the items to fall off the roof rack and cause damage to your vehicle or others around you.
- To prevent damage or loss of cargo while driving, check frequently before or while driving to make sure the items on the roof rack are securely fastened.

Side seal molding (if equipped)


OST080006L

⚠ CAUTION

Don't step up the side seal molding on the frame. Heavy loads on the molding can cause deformation and damage.

Infotainment system

✻ NOTICE

If you install an aftermarket HID head lamp, your vehicle's audio and electronic device may malfunction.

* If your vehicle is equipped with Infotainment system, refer to a separately supplied manual for detailed information.

Antenna

Micro pole antenna (if equipped)


OYB040453L

Your car uses a micro pole antenna to receive broadcast signals. The antenna pole is a removable type. To remove the antenna pole, turn it counterclockwise. To install the antenna, turn it clockwise.

⚠ CAUTION

Micro pole antenna

- Before entering a place with a low height clearance or a car wash, remove surely the antenna by rotating it counterclockwise. If not, the antenna may be damaged.
- When reinstalling your antenna, it is important that it is fully tightened and adjusted to the upright position to ensure proper reception. But it could be folded or removed when parking the vehicle or when loading cargo on the roof rack.
- When cargo is loaded on the roof rack, do not place the cargo near the antenna pole to ensure proper reception.

Shark fin antenna (if equipped)

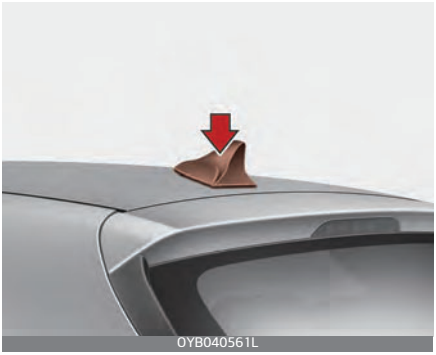
OYB040561L

The shark fin antenna will receive the broadcast signals.

USB port



You can use an USB port to plug in an USB.

How vehicle audio works

FM reception

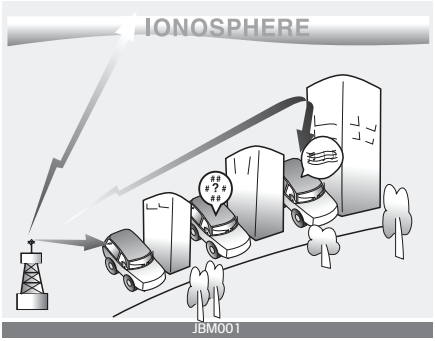

AM and FM radio signals are broadcast from transmitter towers located around your city. They are intercepted by the radio antenna on your vehicle. This signal is then received by the radio and sent to your vehicle speakers.

When a strong radio signal has reached your vehicle, the precise engineering of your infotainment system ensures the best possible quality reproduction. However, in some cases the signal coming to your vehicle may not be strong and clear.

This can be due to factors, such as the distance from the radio station, closeness of other strong radio stations or the presence of buildings, bridges or other large obstructions in the area.

AM reception

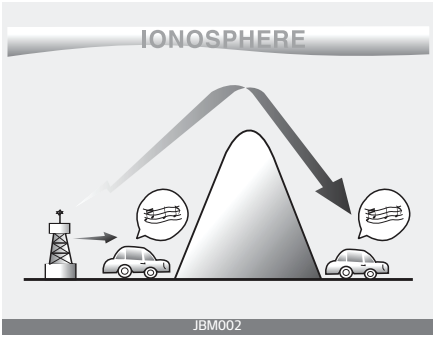

AM broadcasts can be received at greater distances than FM broadcasts. This is because AM radio waves are transmitted at low frequencies. These long, low frequency radio waves can follow the curvature of the earth rather than travelling straight out into the atmosphere. In addition, they curve around obstructions so that they can provide better signal coverage.

FM radio station

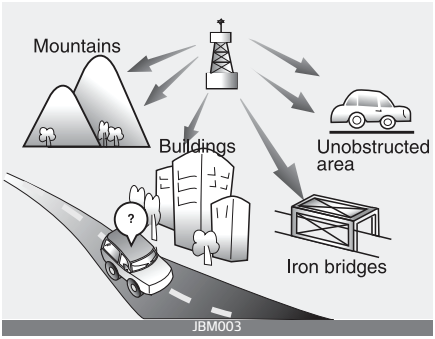

FM broadcasts are transmitted at high frequencies and do not bend to follow the earth's surface. Because of this, FM broadcasts generally begin to fade at short distances from the station. Also, FM signals are easily affected by buildings, mountains, or other obstructions. These can result in certain listening conditions which might lead you to believe a problem exists with your radio. The following conditions are normal and do not indicate radio trouble:

- Fading – As your vehicle moves away from the radio station, the signal will weaken and sound will begin to fade. When this occurs, we suggest that you select another stronger station.

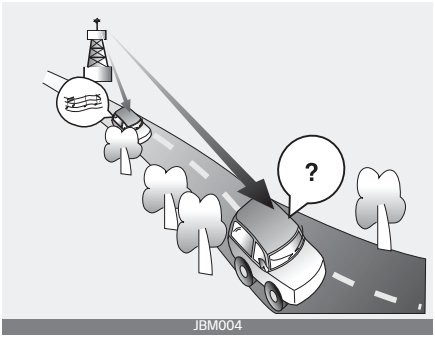

- Flutter/Static – Weak FM signals or large obstructions between the transmitter and your radio can disturb the signal causing static or fluttering noises to occur. Reducing the treble level may lessen this effect until the disturbance clears.
- Station Swapping – As a FM signal weakens, another more powerful signal near the same frequency may begin to play. This is because your radio is designed to lock onto the clearest signal. If this occurs, select another station with a stronger signal.

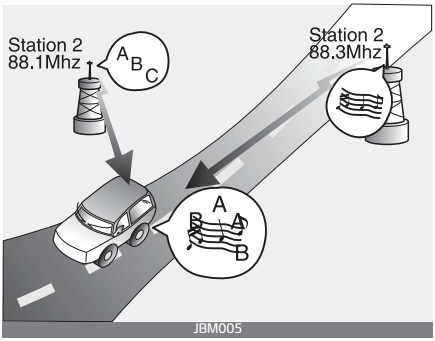

- Multi-Path Cancellation – Radio signals being received from several directions can cause distortion or fluttering. This can be caused by a direct and reflected signal from the same station, or by signals from two stations with close frequencies. If this occurs, select another station until the condition has passed.

Using a cellular phone or a twoway radio

When a cellular phone is used inside the vehicle, noise may be produced from the infotainment system. This does not mean that something is wrong with the audio equipment. In such a case, use the cellular phone at a place as far as possible from the audio equipment.

⚠ CAUTION

When using a communication system such as a cellular phone or a radio set inside the vehicle, a separate external antenna must be fitted. When a cellular phone or a radio set is used with an internal antenna alone, it may interfere with the vehicle's electrical system and adversely affect safe operation of the vehicle.

⚠ WARNING

Do not use a cellular phone while driving. Stop at a safe location to use a cellular phone.

iPod®

iPod® is a trademark of Apple Inc.

Bluetooth® Wireless Technology

The Bluetooth® word mark and logos are registered trademarks owned by Bluetooth SIG, Inc. and any use of such marks by Kia is nder license. Other trademarks and trade names are those of their respective owners.



BLUETOOTH_LOGO_BLACK

Driving your vehicle 5

Before driving 5-7

- Before entering vehicle 5-7
- Necessary inspections 5-7
- Before starting 5-7

Key positions 5-9

- Ignition switch position 5-9
- Starting the engine 5-10
- Stopping the engine (Manual Transmission/Intelligent Manual Transmission (iMT)) 5-11

ENGINE START/STOP button 5-12

- Illuminated ENGINE START/STOP button 5-12
- ENGINE START/STOP button position 5-12
- Starting the engine 5-15
- Stopping the engine (Manual Transmission/Intelligent Manual Transmission (iMT)) 5-17

Idle Stop and Go (ISG) system 5-17

- Activating the ISG 5-17
- Deactivating the ISG 5-18
- Auto stop 5-18
- Auto start 5-20
- Condition of ISG system operation 5-21
- ISG Indication 5-23
- ISG malfunction 5-24

Manual Transmission (MT) 5-25

- Manual Transmission operation 5-25
- Good driving practices 5-28

Intelligent Manual Transmission (iMT) 5-29

- Intelligent Manual Transmission (iMT) operation 5-30
- Good driving practices 5-33

5 Driving your vehicle

Automatic Transmission (AT) 5-34
- Automatic Transmission operation 5-34
- Good driving practices 5-40

Dual Clutch Transmission (DCT) 5-42
- Dual Clutch Transmission operation 5-42
- LCD display for warning message 5-44
- Good driving practices 5-50

Brake system 5-51
- Power brakes 5-51
- Parking brake 5-53
- Anti-lock brake system (ABS) 5-55
- Electronic Stability Control (ESC) 5-57
- Hill-start assist control (HAC) 5-60
- Vehicle stability management (VSM) 5-61
- ESS : Emergency Stop Signal 5-62
- Good braking practices 5-63

Drive mode integrated control 5-64
- Drive mode 5-64

Forward Collision-Avoidance Assist (FCA) (Sensor fusion) .. 5-66
- Function settings 5-67
- FCA warning message and function control 5-69
- Brake operation 5-70
- Warning message and warning light 5-72
- Function malfunction 5-72
- Limitations of the function 5-74
- Situation in which the function may not detect pedestrian and cyclist properly. 5-79

Lane Keeping Assist (LKA) 5-81

• Detecting sensor 5-81
• Turning the function ON/OFF 5-83
• LKA function change 5-83
• LKA activation 5-84
• Warning 5-85
Blind-Spot Collision Warning (BCW) 5-88
• Detecting sensor 5-89
• Function settings 5-90
• Function operation 5-92
• Function malfunction and limitations 5-93
Blind-Spot Collision-Avoidance Assist (BCA) 5-98
• Detecting sensor 5-99
• Function settings 5-100
• Function operation 5-101
• Function malfunction and limitations 5-104
Manual Speed Limit Assist (MSLA) 5-109
• Function operation 5-110
Intelligent Speed Limit Warning (ISLW) 5-112
• Function setting and activation 5-113
• Display 5-113
• Limitations of the function 5-115
Driver Attention Warning (DAW) 5-117
• Function settings 5-117
• Function operation 5-119
• Function malfunction and limitations 5-121
Cruise Control (CC) 5-124
• Cruise Control operation 5-124
• Function operation 5-124
• To increase set speed: 5-125

5 Driving your vehicle

• To decrease speed: 5-125
• To temporarily pause the function 5-125
• To resume the function 5-126
• To turn off the function 5-127
Smart Cruise Control (SCC) 5-128
• Function settings 5-129
• To adjust the sensitivity of smart cruise control 5-133
• SCC Reaction 5-133
• Function malfunction and limitations 5-139
Lane Following Assist (LFA) 5-144
• Detecting sensor 5-144
• Function settings 5-144
• Function operation 5-145
• Function malfunction and limitations 5-147
Rear Cross-Traffic Collision Warning (RCCW) 5-147
• Function settings 5-148
• Function operation 5-149
• Function malfunction and limitations 5-150
Rear Cross-Traffic Collision-Avoidance Assist (RCCA) .. 5-154
• Function settings 5-155
• Function operation 5-156
• Function malfunction and limitations 5-160
Declaration of conformity 5-164
• The radio frequency components (Rear Corner Radar) complies : 5-164
Economical operation 5-169
Special driving conditions 5-171
• Hazardous driving conditions 5-171
• Reducing the risk of a rollover 5-171

Driving your vehicle 5

• Rocking the vehicle 5-172
• Smooth cornering 5-173
• Driving at night 5-173
• Driving in the rain 5-173
• Driving in flooded areas 5-174
• Driving off-road 5-174
• Highway driving 5-174
Winter driving 5-176
• Snowy or icy conditions 5-176
• Use high quality ethylene glycol coolant 5-178
• Check battery and cables 5-179
• Change to "winter weight" oil if necessary 5-179
• Check spark plugs and ignition system 5-179
• To keep locks from freezing 5-179
• Use approved window washer anti-freeze in system 5-179
• Don't let your parking brake freeze 5-180
• Don't let ice and snow accumulate underneath 5-180
• Carry emergency equipment 5-180
Trailer Towing (For Europe) 5-181
• Hitches 5-182
• Safety chains 5-183
• Trailer brakes 5-183
• Driving with a trailer 5-184
• Maintenance when trailer towing 5-188
• If you do decide to pull a trailer 5-189
Vehicle weight 5-192

Driving your vehicle

⚠ WARNING

ENGINE EXHAUST CAN BE DANGEROUS!

Engine exhaust fumes can be extremely dangerous. If, at any time, you smell exhaust fumes inside the vehicle, open the windows immediately.

- **Do not inhale exhaust fumes.**
  Exhaust fumes contain carbon monoxide, a colorless, odorless gas that can cause unconsciousness and death by asphyxiation.
- **Be sure the exhaust system does not leak.**
  The exhaust system should be checked whenever the vehicle is raised to change the oil or for any other purpose. If you hear a change in the sound of the exhaust or if you drive over something that strikes the underneath side of the vehicle, have the system checked by a professional workshop. Kia recommends to visit an authorized Kia dealer/service partner.
- **Do not run the engine in an enclosed area.**
  Letting the engine idle in your garage, even with the garage door open, is a hazardous practice. Never run the engine in your garage any longer than it takes to start the engine and back the car out.
- **Avoid idling the engine for prolonged periods with people inside the car.**
  If it is necessary to idle the engine for a prolonged period with people inside the car, be sure to do so only in an open area with the air intake set at "Fresh" and fan operating at one of the higher speeds so fresh air is drawn into the interior.

If you must drive with the trunk lid open because you are carrying objects that make this necessary:

1. Close all windows.
2. Open side vents.
3. Set the air intake control at "Fresh", the air flow control at "Floor" or "Face" and the fan at one of the higher speeds.

To assure proper operation of the ventilation system, be sure the ventilation air intakes located just in front of the windshield are kept clear of snow, ice, leaves or other obstructions.

Before driving

Before entering vehicle

- Be sure that all windows, outside mirror(s), and outside lights are clean.
- Check the condition of the tires.
- Check under the vehicle for any sign of leaks.
- Be sure there are no obstacles behind you if you intend to back up.

Necessary inspections

Fluid levels, such as engine oil, engine coolant, brake fluid, and washer fluid should be checked on a regular basis, with the exact interval depending on the fluid. Further details are provided in “Maintenance” on page 7-5.

⚠ WARNING

Driving while distracted can result in a loss of vehicle control, that may lead to an accident, severe personal injury, and death. The driver's primary responsibility is in the safe and legal operation of a vehicle, and use of any handheld devices, other equipment, or vehicle systems which take the driver's eyes, attention and focus away from the safe operation of a vehicle or which are not permissible by law should never be used during operation of the vehicle.

Before starting

- Close and lock all doors.
- Position the seat so that all controls are easily reached.
- Adjust the inside and outside rearview mirrors.
- Be sure that all lights work.
- Check all gauges.
- Check the operation of warning lights when the ignition switch is turned to the ON position.
- Release the parking brake and make sure the brake warning light goes out.

For safe operation, be sure you are familiar with your vehicle and its equipment.

⚠ WARNING

All passengers must be properly belted whenever the vehicle is moving. Refer to "Seat belts" on page 3-15 for more information on their proper use.

⚠ WARNING

Always check the surrounding areas near your vehicle for people, especially children, before putting a car into D (Drive) or R (Reverse).

⚠ WARNING

Driving under the influence of alcohol or drugs

Drinking and driving is dangerous. Drunk driving is the number one contributor to the highway death toll each year. Even a small amount of alcohol will affect your reflexes, perceptions and judgment. Driving while under the influence of drugs is as dangerous or more dangerous than driving drunk.

You are much more likely to have a serious accident if you drink or take drugs and drive.

If you are drinking or taking drugs, don't drive. Do not ride with a driver who has been drinking or taking drugs. Choose a designated driver or call a cab.

⚠ WARNING

- When you intend to park or stop the vehicle with the engine on, be careful not to depress the accelerator pedal for a long period of time. It may overheat the engine or exhaust system and cause fire.
- When you make a sudden stop or turn the steering wheel rapidly, loose objects may drop on the floor and it could interfere with the operation of the foot pedals, possibly causing an accident. Keep all things in the vehicle safely stored.
- If you do not focus on driving, it may cause an accident. Be careful when operating what may disturb driving such as audio or heater. It is the responsibility of the driver to always drive safely.

Key positions

Ignition switch position

Type A



OSK3058160NR

Type B



OYB056068

LOCK (1)

The steering wheel locks to protect against theft. The ignition key can be removed only in the LOCK position.

ACC (Accessory) (2)

The steering wheel is unlocked and electrical accessories are operative.

✻ NOTICE

If difficulty is experienced turning the ignition switch to the ACC position, turn the key while turning the steering wheel right and left to release the tension.

ON (3)

The warning lights can be checked before the engine is started. This is the normal running position after the engine is started.

Do not leave the ignition switch ON if the engine is not running to prevent battery discharge.

START (4)

Turn the ignition switch to the START position to start the engine. The engine will crank until you release the key; then it returns to the ON position. The brake warning light can be checked in this position.

⚠ WARNING

Ignition switch

- Never turn the ignition switch to LOCK or ACC while the vehicle is moving. This would result in loss of directional control and braking

function, which could cause an accident.
- The anti-theft steering column lock is not a substitute for the parking brake. Before leaving the driver's seat, always make sure the shift lever is engaged in 1st gear for the Manual Transmission/Intelligent Manual Transmission or P (Park) for the Automatic Transmission/Dual Clutch Transmission, set the parking brake fully and shut the engine off. Unexpected and sudden vehicle movement may occur if these precautions are not taken.
- Never reach for the ignition switch, or any other controls through the steering wheel while the vehicle is in motion. The presence of your hand or arm in this area could cause a loss of vehicle control, an accident and serious bodily injury or death.
- Do not place any movable objects around the driver's seat as they may move while driving, interfere with the driver and lead to an accident.

Starting the engine

⚠ WARNING

- Always wear appropriate shoes when operating your vehicle. Unsuitable shoes (high heels, ski boots, etc.) may interfere with your ability to use the brake and accelerator pedal, and the clutch (if equipped).
- Do not start the vehicle with the accelerator pedal depressed. The vehicle can move and lead to an accident.
- Wait until the engine rpm is normal. The vehicle may suddenly move if the brake pedal is released when the rpm is high.

✻ NOTICE

Kick down mechanism (if equipped)

If your vehicle is equipped with a kick down mechanism in the accelerator pedal, it prevents you from driving at full throttle unintentionally by making the driver require increased effort to depress the accelerator pedal. However, if you depress the pedal more than approximately 80%, the vehicle can be at full throttle and the accelerator pedal will be easier to depress. This is not a malfunction but a normal condition.

Starting the gasoline engine

1. Make sure the parking brake is applied.
2. **Manual Transmission/Intelligent Manual Transmission** – Depress the clutch pedal fully and shift the transmission into Neutral. Keep the clutch pedal and brake pedal depressed while turning the ignition switch to the start position.
   Automatic Transmission/Dual Clutch Transmission – Place the transmission shift lever in P (Park). Depress the brake pedal fully.
   You can also start the engine when the shift lever is in the N (Neutral) position.
3. Turn the ignition switch to START and hold it there until the engine starts (a maximum of 10 seconds), then release the key.

It should be started **without depressing the accelerator.**

4. Do not wait for the engine to warm up while the vehicle remains stationary.
   Start driving at moderate engine speeds. (Steep accelerating and decelerating should be avoided.)

⚠ CAUTION

If the engine stalls while you are in motion, do not attempt to move the shift lever to the P (Park) position. If traffic and road conditions permit, you may put the shift lever in the N (Neutral) position while the vehicle is still moving and turn the ignition switch to the START position in an attempt to restart the engine.

⚠ CAUTION

- Do not engage the starter for more than 10 seconds. If the engine stalls or fails to start, wait 5 to 10 seconds before reengaging the starter. Improper use of the starter may damage it.
- Do not turn the ignition switch to the START position with the engine running. It may damage the starter.

Stopping the engine (Manual Transmission/Intelligent Manual Transmission (iMT))

1. Make sure the vehicle is completely stopped and keep the clutch pedal and brake pedal depressed.
2. Shift the transmission into Neutral while depressing the clutch pedal and brake pedal.
3. Engage the parking brake while depressing the brake pedal.
4. Turn the ignition key to the LOCK position and remove it.

ENGINE START/STOP button (if equipped)

Illuminated ENGINE START/STOP button



OYB050001L

Whenever the front door is opened, the ENGINE START/STOP button will illuminate for your convenience. The light will go off after about 30 seconds when the door is closed. It will also go off immediately when the theft-alarm system is armed.

ENGINE START/STOP button position

OFF  *(Not Illuminated)*

- **With Manual Transmission /Intelligent Manual Transmission**

To turn off the engine (START/RUN position) or vehicle power (ON position), stop the vehicle then press the ENGINE START/STOP button.

- **With Automatic Transmission/ Dual Clutch Transmission**

To turn off the engine (START/RUN position) or vehicle power (ON position), press the ENGINE START/STOP button with the shift lever in the P (Park) position. When you press the ENGINE START/STOP button without the shift lever in the P (Park) position, the ENGINE START/STOP button will not change to the OFF position but to the ACC position.

Also, the steering wheel locks when the ENGINE START/STOP button is in the OFF position to protect you against theft. It locks when the door is opened.

Vehicles equipped with anti-theft steering column lock

The steering wheel locks when the ENGINE START/STOP button is in the OFF position to protect you against theft. It locks when the door is opened.
If the steering wheel is not locked properly when you open the driver's door, the warning chime will sound. If the problem is not solved, have the system checked by a professional workshop. Kia recommends to visit an authorized Kia dealer/service partner.
In addition, if the ENGINE START/STOP button is in the OFF position after the driver's door is opened, the steering wheel will not lock and the warning chime will sound. In such a

situation, close the door. Then the steering wheel will lock and the warning chime will stop.

✻ NOTICE

If the steering wheel doesn't unlock properly, the ENGINE START/STOP button will not work. Press the ENGINE START/STOP button while turning the steering wheel right and left to release the tension.

- If difficulty is experienced turning the ENGINE START/STOP button to the ACC position, turn the steering wheel right and left to release the tension while pressing the ENGINE START/STOP button.
- When you turn off the engine, the vehicle should be stopped.

⚠ CAUTION

You are able to turn off the engine (START/RUN) or vehicle power (ON), only when the vehicle is not in motion. In an emergency situation while the vehicle is in motion, you are able to turn the engine off and to the ACC position by pressing the ENGINE START/STOP button for more than 2 seconds or 3 times successively within 3 seconds. If the vehicle is still moving, you can restart the engine without depressing the brake pedal by pressing the ENGINE START/STOP button with the shift lever in the N (Neutral) position.

ACC (Accessory)  ***(Orange)***

- **With Manual Transmission /Intelligent Manual Transmission**

Press the ENGINE START/STOP button when the button is in the OFF position without depressing the clutch pedal.

- **With Automatic Transmission/ Dual Clutch Transmission**

Press the ENGINE START/STOP button while it is in the OFF position without depressing the brake pedal.

The steering wheel unlocks and electrical accessories are operational.

If the ENGINE START/STOP button is in the ACC position for more than 1 hour, the button is turned off automatically to prevent battery discharge.

ON  ***(Red)***

- **With Manual Transmission /Intelligent Manual Transmission**

Press the ENGINE START/STOP button when the button is in the ACC position without depressing the clutch pedal.

- **With Automatic Transmission/ Dual Clutch Transmission**

Press the ENGINE START/STOP button while it is in the ACC position without depressing the brake pedal.

The warning lights can be checked before the engine is started. Do not leave the ENGINE START/STOP button in the ON position for a long time. The battery may discharge, because the engine is not running.

START/RUN  ***(Not Illuminated)***

- **With Manual Transmission**

To start the engine, depress the clutch pedal and brake pedal, then press the ENGINE START/STOP button with the shift lever in the N (Neutral) position.

With Intelligent Manual Transmission (iMT)

Depress the clutch pedal fully and shift the transmission into Neutral. Keep the clutch pedal and brake pedal depressed while pressing the ENGINE START/STOP button to the START position. If the status is changed into ACC, it will be displayed on the cluster as in the following pop-up.

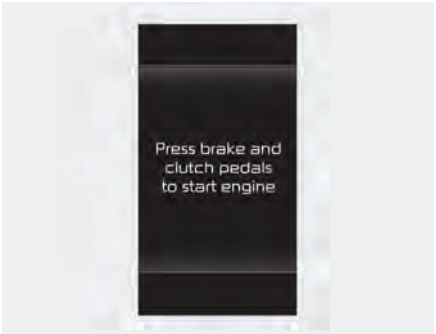

OYB050195L

When the shift lever is not placed in N (Neutral), the following pop-up will be displayed on the cluster.



OYB050196L

- **With Automatic Transmission/ Dual Clutch Transmission**

To start the engine, depress the brake pedal and press the ENGINE START/STOP button with the shift lever in the P (Park) or the N (Neutral) position. For your safety, start the engine with the shift lever in the P (Park) position.

✻ NOTICE

If you press the ENGINE START/STOP button without depressing the clutch pedal for Manual Transmission or without depressing the brake pedal and clutch pedal for Intelligent Manual Transmission (iMT) or without depressing the brake pedal for Automatic Transmission/Dual Clutch Transmission vehicles, the engine will not start and the ENGINE START/STOP button changes as follow: OFF → ACC → ON → OFF or ACC

✻ NOTICE

If you leave the ENGINE START/STOP button in the ACC or ON position for a long time, the battery will discharge.

⚠ WARNING

- Never press the ENGINE START/STOP button while the vehicle is in motion. This would result in loss of directional control and braking function, which could cause an accident.
- The anti-theft steering column lock is not a substitute for the parking brake. Before leaving the driver's seat, always make sure the shift lever is engaged in P (Park), set the parking brake fully and shut the engine off. Unexpected and sudden vehicle movement may occur if these precautions are not taken.
- Never reach for the ENGINE START/STOP button or any other controls through the steering wheel while the vehicle is in motion. The presence of your hand or arm in the area could cause loss of vehicle control, an accident and serious bodily injury or death.
- Do not place any movable objects around the driver's seat as they may move while driving, interfere with the driver and lead to an accident.

Starting the engine

⚠ WARNING

- Always wear appropriate shoes when operating your vehicle. Unsuitable shoes (high heels, ski boots, etc.) may interfere with your ability to use the brake and accelerator pedal.
- Do not start the vehicle with the accelerator pedal depressed. The vehicle can move and lead to an accident.
- Wait until the engine rpm is normal. The vehicle may suddenly move if the brake pedal is released when the rpm is high.

✻ NOTICE

Kick down mechanism (if equipped)

If your vehicle is equipped with a kick down mechanism in the accelerator pedal, it prevents you from driving at full throttle unintentionally by making the driver require increased effort to depress the accelerator pedal. However, if you depress the pedal more than approximately 80%, the vehicle can be at full throttle and the accelerator pedal will be easier to depress. This is not a malfunction but a normal condition.

Starting the gasoline engine

1. Carry the smart key or leave it inside the vehicle.
2. Make sure the parking brake is firmly applied.
3. **Manual Transmission /Intelligent Manual Transmission** – Depress the clutch pedal fully and shift the transmission into Neutral. Keep the clutch pedal and brake pedal depressed while starting the engine.
   Automatic Transmission/Dual Clutch Transmission – Place the transmission shift lever in P (Park). Depress the brake pedal fully.
   You can also start the engine when the shift lever is in the N (Neutral) position.
4. Press the ENGINE START/STOP button.

It should be started **without depressing the accelerator.**

5. Do not wait for the engine to warm up while the vehicle remains stationary.
   Start driving at moderate engine speeds. (Steep accelerating and decelerating should be avoided.)

⚠ CAUTION

Do not turn the ignition switch to the START position with the engine running. It may damage the starter.



OYB050005L

✻ NOTICE

- If the battery is weak or the smart key does not work correctly, you can start the engine by pressing the ENGINE START/STOP button with the smart key.
- When the brake switch fuse is blown, you can't start the engine normally. Replace the fuse with a

new one. If it is not possible, you can start the engine by pressing the ENGINE START/STOP button for 10 seconds while it is in the ACC position. The engine can start without depressing the brake pedal. But for your safety always depress the brake pedal before starting the engine.

⚠ CAUTION

Do not press the ENGINE START/STOP button for more than 10 seconds except when the stop lamp fuse is blown.

Stopping the engine (Manual Transmission/Intelligent Manual Transmission (iMT))

1. Make sure the vehicle is completely stopped and keep the clutch pedal and brake pedal depressed.
2. Shift the transmission into Neutral while depressing the clutch pedal and brake pedal.
3. Engage the parking brake while depressing the brake pedal.
4. Turn the ignition key to the LOCK position and remove it.

Idle Stop and Go (ISG) system (if equipped)

Your vehicle may be equipped with the ISG system, which reduces fuel consumption by stopping and restarting the engine automatically.

The engine starts automatically as soon as the starting conditions are met.

✻ NOTICE

When the engine automatically starts by the ISG system, some warning lights (ABS, ESC, ESC OFF, EPS or Parking brake warning light) may turn on for a few seconds.

This happens because of low battery voltage. It does not mean the system is malfunctioning.

Activating the ISG

The ISG system turns on whenever you switch the ignition on.

Deactivating the ISG

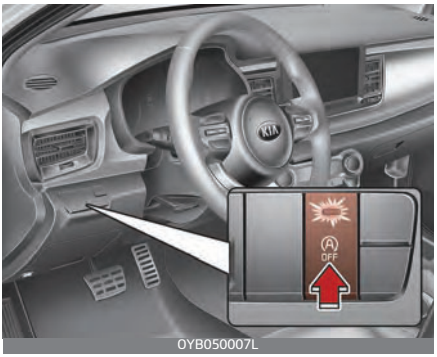

If you want to deactivate the ISG system, press the ISG OFF button.

The light on the ISG OFF button will illuminate.

If you press the ISG OFF button again, the function will be activated and the light on the ISG OFF button will turn off.

Auto stop

To stop the engine in idle stop mode (Excluding : Mild Hybrid Electric Vehicle)



- Manual Transmission/Intelligent Manual Transmission
  - Decrease the vehicle speed to less than 5 km/h.
  - Shift into N (Neutral) position.
  - Release the clutch pedal.
- Automatic Transmission/Dual Clutch Transmission
  - Decrease the vehicle speed to 0 km/h.
  - Press the brake pedal.

The engine will stop and the green AUTO STOP indicator (Ⓐ) on the instrument cluster will illuminate.

✻ NOTICE

- Vehicle which is equipped manual transmission or intelligent manual transmission must reach a speed of at least 8 km/h since last idle stop and vehicle which is equipped automatic transmission or dual clutch transmission must reach a speed of at least 5 km/h since last idle stop.
- If you unfasten the seat belt or open the driver's door (engine hood), ISG system will be deactivated.

To stop the engine in idle stop mode (Mild Hybrid Electric Vehicle)

Manual Transmission/Intelligent Manual Transmission

Three versions of idle stop are available for MHEV which is equipped intelligent manual transmission

- Conventional Idle STOP
  - Decrease the vehicle speed to less than 7 km/h.
  - Shift into N (Neutral) position.
  - Release the clutch pedal.
- Extended Idle STOP
  - Depress the brake pedal
  - Depress the clutch pedal
- During Sailing Mode
  - You can keep engine off status from sailing to standstill by pressing clutch and brake pedal nearly at the same time.

You can keep engine off status from sailing to standstill by pressing clutch and brake pedal nearly at the same time.

✻ NOTICE

- If last gear position is 1st, Idle STOP will not be activated.
- Vehicle which is equipped manual transmission or intelligent manual transmission must reach a speed of at least 8 km/h since last idle stop.
- During ISG STOP status, you can shift into N (Neutral) position and release clutch pedal, then ISG STOP status will remain as STOP.
- Extended Idle STOP operates even over 7km/h if it meets the speed requirement in each gear position. (example: Extended Idle STOP operates even at the 3rd speed, 40kph.)
- If you unfasten the seat belt or open the driver's door (engine hood) in auto stop mode at standstill, ISG system will be deactivated.

Automatic Transmission

- Conventional Idle STOP
  - Decrease the vehicle speed to 0 km/h.
  - Press the brake pedal.

Dual Clutch Transmission

- Conventional Idle STOP
  - Decrease the vehicle speed to 0 km/h.
  - Press the brake pedal.
- Extended Idle STOP
  - Decrease the vehicle speed less than 25 km/h.
  - Press the brake pedal.
- During Sailing Mode
  - You can keep engine off status from sailing to standstill by pressing brake pedal below 40km/h.

✻ NOTICE

- Vehicle which is equipped automatic transmission or dual clutch transmission must reach a speed of at least 30 km/h for Extended Idle STOP or 5 km/h for Conventional Idle STOP since last idle stop.
- If you unfasten the seat belt or open the driver's door (engine hood) in auto stop mode at standstill, ISG system will be deactivated.

Auto start

To restart the engine from idle stop mode (Excluding : Mild Hybrid Electric Vehicle)

Manual Transmission/Intelligent Manual Transmission

Vehicle which is equipped manual transmission is available two version of restart.

- Conventional restart
  - Press the clutch pedal when the shift lever is in the N (Neutral) position.
- Late restart (if equipped)
  - Depress the clutch pedal
  - Engage the gear
  - Release the brake pedal

✻ NOTICE

- Late restart function is only operated when it is on a level ground and the vehicle is stable.
- To start the engine when the brake is not pressed or the gear is already engaged, for safety press the brake pedal first and then press the clutch pedal.
- To turn on the engine without vehicle movement with the brake pedal pressed, (only with Late Restart)
  1. Press and release the clutch pedal
  2. Press the clutch pedal again immediately
- After the vehicle stalled, the engine starts if you operate as shown below
  1. Release the clutch pedal, after the engine completely stop
  2. Depress the clutch pedal

Automatic Transmission/Dual Clutch Transmission

- Release the brake pedal

The engine will start and the green AUTO STOP indicator (Ⓐ) on the instrument cluster will go out.

To restart the engine from idle stop mode (Mild Hybrid Electric Vehicle)

Manual Transmission/Intelligent Manual Transmission

- Before standstill
  - Press the clutch pedal if the clutch pedal has not pressed.
  - If the clutch pedal has already pressed, release the brake pedal or move the gear to a position other than N position.
- After standstill
  - If the clutch pedal has already pressed, release the brake pedal or move the gear to a position other than N position. If the clutch pedal has not been pressed yet, the engine restarts according to the LATE Restart procedure.
    1) Depress the clutch pedal
    2) Engage the gear
    3) Release the brake pedal only

✻ NOTICE

- Late restart function is only operated when it is on a level ground and the vehicle is stable.
- To start the engine when the brake is not pressed or the gear is already engaged, for safety press the brake pedal first and then press the clutch pedal.
- To turn on the engine without vehicle movement with the brake pedal pressed, (only with Late Restart)
  1. Press and release the clutch pedal
  2. Press the clutch pedal again immediately
- After the vehicle stalled, the engine starts if you operate as shown below (only with Late Restart)
  1. Release the clutch pedal, after the engine completely stop
  2. Depress the clutch pedal
- After operating ISG STOP, if the vehicle speed increases instead of decreasing, the engine may restart automatically.

Automatic Transmission/Dual Clutch Transmission

- Release the brake pedal

✻ NOTICE

After operating ISG STOP, if the vehicle speed increases instead of decreasing, the engine may restart automatically

Condition of ISG system operation

The ISG system will operate under the following condition:

- The driver's seatbelt is fastened
- The driver's door and hood are closed
- The brake vacuum pressure is adequate

- The battery sensor is activated and the battery is sufficiently charged
- Outside temperature is not too low or too high
- The climate control system satisfies the conditions
- The vehicle is sufficiently warmed up
- The vehicle is not on a steep road grade (Excluding : Manual Transmission)
- The steering wheel is not at a sharp angle
- The vehicle is not at a high elevation
- The front windshield defroster is off
- You have not selected Manual shift mode (Excluding : Manual Transmission)
- Certain amount of time passed after releasing the gear from R position.

The engine will also restart automatically without the driver's any actions if the following occurs:

- The brake vacuum pressure is low.
- You have exceeded the maximum engine off time
- The air conditioning is ON with the fan speed set to the highest position.
- Fogging of the windows could occur and the air conditioning is on.
- The battery is not within optimal operating
- The cooling and heating performance of the climate control system is unsatisfactory.
- When you press the ISG OFF button with the engine automatically stopped (Excluding : Manual Transmission)
- Your vehicle is moving after standstill.
- You press the accelerator and the brake pedal at the same time. (Excluding : Manual Transmission)
- The driver safety belt becomes unfastened or the driver door is ajar. (Excluding : Manual Transmission) conditions.

The green AUTO STOP indicator (Ⓐ) on the instrument cluster will blink for 5 seconds.

✻ NOTICE

- If the ISG system does not meet that operation condition, the ISG system is deactivated. The light on the ISG OFF button will illuminate.
- If the light or warning message comes on continuously, please check the operation condition.

ISG Indication



OYB050006L

ISG System is indicated by lamp on the instrument cluster. If your vehicle is equipped with a supervision cluster, the notice will illuminate on the LCD display.

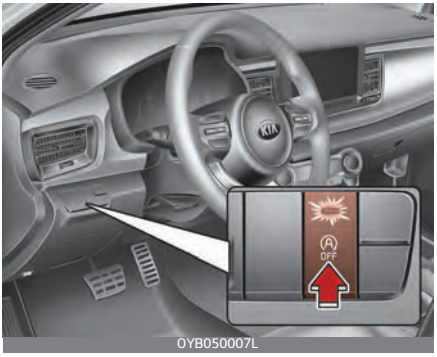

OYB050007L



OJA050091L

The function may require the engine to manually restart when the light on the ISG OFF button will illuminate and If your vehicle is equipped with a supervision cluster warning message comes on continuously.

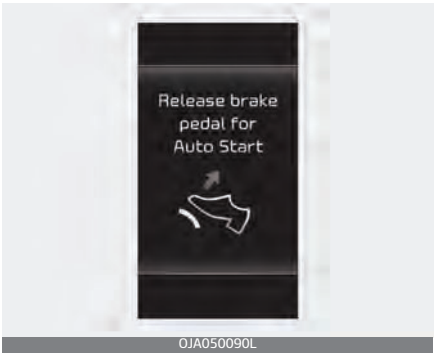

OJA050090L

The engine will not start if the shift lever is moved from the N (neutral) stage to the D (driving) stage, manual mode, or R (reverse) stage without stepping on the brake pedal while the engine is stopped automatically. At this time, if you press the brake it will be restarted.



OYB050196L

Conventional MT vehicle(not MHEV or not equipped with LATE Restart)

is able to restart engine, only in Neutral gear. If you select a gear, without depressing clutch pedal fully, then warning will be displayed with beep. You should restart the engine in Neutral gear position.

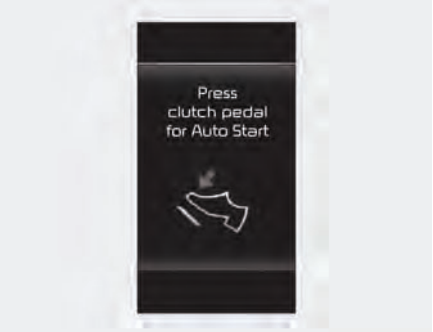

OYB050201L

Unintentionally, when the engine is turned off or the vehicle is moving, if the gear is engaged and the clutch pedal is not pressed, the system displays the warning message as shown above. At this time, if the driver presses the clutch pedal all the way, the engine restarts automatically.(Only with Late Restart equipped ISG system, except MHEV)

ISG malfunction

The system may not operate when:


OYB050006L

- The ISG related sensors or function error occurs.

The yellow AUTO STOP indicator (Ⓐ) on the instrument cluster will stay on after blinking for 5 seconds and the light on the ISG OFF button will illuminate.

✻ NOTICE

- If the ISG OFF button light is not turned off by pressing the ISG OFF button again or if the ISG system continuously does not work correctly, have your vehicle inspected by a professional workshop as soon as possible. Kia recommends to contact an authorized Kia dealer/service partner.
- When the ISG OFF button light comes on, it may stop illuminating after driving your vehicle at

approximately 80 km/h for a maximum of two hours and setting the fan speed control knob below the 2nd position. If the ISG OFF button light continues to be illuminated in spite of the procedure, have your vehicle inspected by a professional workshop as soon as possible. Kia recommends to contact an authorized Kia dealer/service partner.

✻ NOTICE

If the AGM battery is reconnected or replaced, ISG system will not operate immediately.

If you want to use the ISG system, the battery sensor needs to be calibrated for approximately 4 hours with the ignition off and then, turn the engine on and off 2 or 3 times.

⚠ WARNING

When the engine is in Idle Stop mode, it's possible to restart the engine without the driver taking any action. Before leaving the car or doing anything in the engine room area, stop the engine by turning the ignition switch to the LOCK(OFF) position or removing the ignition key.

Manual Transmission (MT) (if equipped)

Manual Transmission operation

Type A

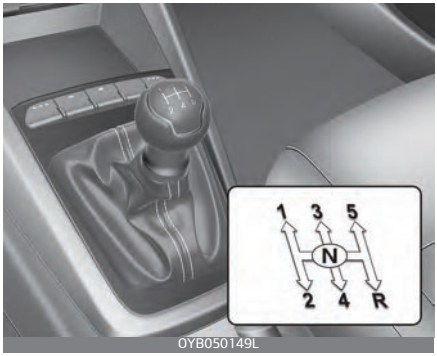

Type B

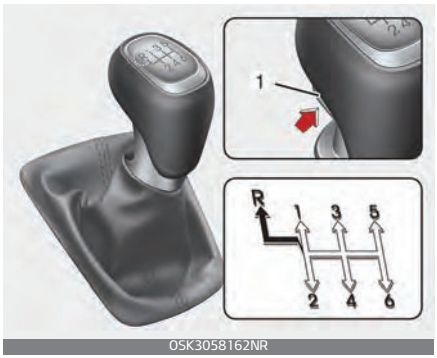

⇨The shift lever can be moved without pulling the button (1).

➡The button (1) should be pressed when moving the shift lever into reverse..

Manual Transmission has 5 (or 6) forward gears.

This shift pattern is imprinted on the shift knob. The transmission is fully synchronized in all forward gears so shifting to either a higher or a lower gear is easily accomplished.

Depress the clutch pedal down fully while shifting, then release it slowly.

If your vehicle is equipped with an ignition lock switch, the engine will not start when starting the engine without depressing the clutch pedal. (if equipped)

The shift lever must be returned to the neutral position before shifting into R (Reverse).

Push the button located immediately below the shift knob and pull the gearshift lever to the left sufficiently, and then shift into reverse (R) gear position.

Make sure the vehicle is completely stopped before shifting into R (Reverse).

Never operate the engine with the tachometer (rpm) in the red zone.

⚠ CAUTION

- When downshifting from fifth gear to fourth gear, caution should be taken not to inadvertently press the shift lever sideways in such a manner that the second gear is engaged. Such a drastic downshift may cause the engine speed to increase to the point that the tachometer will enter the red-zone. Such over-revving of the engine and transmission may possibly cause engine damage.
- Do not downshift more than 2 gears or downshift the gear when the engine is running at high speed (5,000 RPM or higher). Such a downshifting may damage the engine, clutch and the transmission.

- During cold weather, shifting may be difficult until the transmission lubricant is warmed up. This is normal and not harmful to the transmission.
- If you've come to a complete stop and it's hard to shift into 1st or R (Reverse), leave the shift lever at N (Neutral) position and release the clutch. Press the clutch pedal back down, and then shift into 1st or R (Reverse) gear position.

⚠ CAUTION

- To avoid premature clutch wear and damage, do not drive with your foot resting on the clutch pedal. Also, don't use the clutch to hold the vehicle stopped on an uphill grade, while waiting for a traffic light, etc.
- Do not use the shift lever as a handrest during driving, as this

can result in premature wear of the transmission shift forks.
- To prevent possible damage to the clutch system, do not start with the 2nd (second) gear engaged except when you start on a slippery road.
- Do not overload the vehicle. Driving with the vehicle overloaded could cause abnormal friction heat to the clutch disk and damage the clutch cover and disk.

⚠ WARNING

- Before leaving the driver's seat, always set the parking brake fully and shut the engine off. Then make sure the transmission is shifted into 1st gear when the vehicle is parked on a level or uphill grade, and shifted into R (Reverse) on a downhill grade. Unexpected and sudden vehicle movement can occur if these precautions are not followed in the order identified.
- Do not use the engine brake (shifting from a high gear to lower gear) rapidly on slippery roads.
  The vehicle may slip causing an accident.

Using the clutch

The clutch should be pressed all the way to the floor before shifting, then released slowly. The clutch pedal should always be fully released while driving. Do not rest your foot on the clutch pedal while driving. This can cause unnecessary wear. Do not partially engage the clutch to hold the vehicle on an incline. This causes unnecessary wear. Use the foot brake or parking brake to hold the vehicle on an incline. Do not operate the clutch pedal rapidly and repeatedly.

⚠ CAUTION

When operating the clutch pedal, press the clutch pedal down fully. If you don't press the clutch pedal fully, the clutch may be damaged or noise may occur.

⚠ WARNING

Using the clutch

Depress the clutch pedal as far as possible. Be aware not to apply the pedal again before it returns to the normal position.
If the pedal is repeatedly depressed before returning to its normal position, the clutch system might be damaged.
Do not overload the vehicle. Starting or driving a vehicle in this situation

generates too much frictional heat to the clutch disk which might cause damage to the clutch cover and disk. When starting the vehicle or driving backwards, releasing the clutch pedal too soon after shifting the lever might turn off the engine and lead to an accident.

Downshifting

When you must slow down in heavy traffic or while driving up steep hills, downshift before the engine starts to labor. Downshifting reduces the chance of stalling and gives better acceleration when you again need to increase your speed. When the vehicle is traveling down steep hills, downshifting helps maintain safe speed and prolongs brake life.

Good driving practices

- Never take the vehicle out of gear and coast down a hill. This is extremely hazardous. Always leave the vehicle in gear.
- Don't "ride" the brakes. This can cause them to overheat and malfunction. Instead, when you are driving down a long hill, shift to a lower gear. When you do this, engine braking will help slow down the vehicle.
- Slow down before shifting to a lower gear. This will help avoid over-revving the engine, which can cause damage.
- Slow down when you encounter cross winds. This gives you much better control of your vehicle.
- Be sure the vehicle is completely stopped before you attempt to shift into reverse. The transmission can be damaged if you do not.
- Exercise extreme caution when driving on a slippery surface. Be especially careful when braking, accelerating or shifting gears. On a slippery surface, an abrupt change in vehicle speed can cause the drive wheels to lose traction and the vehicle to go out of control.

⚠ WARNING

- Always buckle-up! In a collision, an unbelted occupant is significantly more likely to be seriously injured or killed than a properly belted occupant.
- Avoid high speeds when cornering or turning.
- Do not make quick steering wheel movements, such as sharp lane changes or fast, sharp turns.
- The risk of rollover is greatly increased if you lose control of your vehicle at highway speeds.
- Loss of control often occurs if two or more wheels drop off the road-

way and the driver oversteers to reenter the roadway.
- In the event your vehicle leaves the roadway, do not steer sharply. Instead, slow down before pulling back into the travel lanes.
- Never exceed posted speed limits.

Intelligent Manual Transmission (iMT) (if equipped)

Intelligent Manual Transmission use E-Clutch (Electronic Clutch) and SSC (Start Stop Coasting) technology. When the vehicle is in coasting driving, automatically cuts off the engine power in order to reduce fuel consumption.

Using the E-Clutch, the vehicle can cut engine drive off without pressing the clutch pedal by driver. The E-Clutch is controlled by an actuator that assists the driver in changing gear and allows for coasting driving in order to reduce fuel consumption.

Start Stop Coasting (SSC) technology stops the engine when the vehicle is in coasting driving, so that it does not consume any fuel. When SSC is on, the clutch automatically changes from "closed" to "open" and the engine stops.

- Start Stop Coasting (SSC) is activated when all of the following conditions are true:
  - Vehicle speed: more than 30 Km/h (This speed range varies according to gear)
  - When you do not press the brake pedal and the clutch pedal
  - TCU is normal
  - Coolant temperature is normal

When SSC is off, the engine starts and the clutch automatically changes from “open” to “closed”.

- Start Stop Coasting (SSC) is deactivated when one of the following conditions is true:
  - Vehicle speed: 15 Km/h (This speed range varies according to gear)
  - When you press the accelerator pedal
  - When you press the brake pedal or the clutch pedal
  - When door or hood is opened, or seat belt is released
  - When 12V battery is not charged enough
  - When 48V battery is not charged enough

⚠ CAUTION

- Start Stop Coasting (SSC) is activated when Drive Mode is ECO.
- SSC may be deactivated depending on indoor and outdoor temperature conditions.
- SSC may be deactivated depending on climate control conditions. (defrost, fan speed, etc.)
- Do not shift without pressing the clutch pedal while activating SSC, it leads to damage of transmission.
  Shift the gear all the way after the clutch pedal is fully pressed.

Intelligent Manual Transmission (iMT) operation

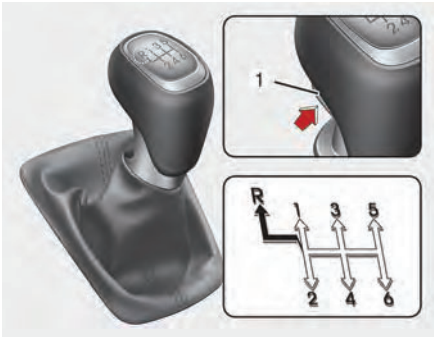

OSK3058162NR

⇨ The shift lever can be moved without pulling the button (1).

➡ The button (1) should be pressed when moving the shift lever into reverse.

The Intelligent manual transmission (iMT) has 6 forward gears.

This shift pattern is imprinted on the shift knob. The transmission is fully synchronized in all forward gears so shifting to either a higher or a lower gear is easily accomplished.

Depress the clutch pedal down fully while shifting, then release it slowly.

If your vehicle is equipped with an ignition lock switch, the engine will not start when starting the engine without depressing the brake pedal and clutch pedal. (if equipped)

The shift lever must be returned to the neutral position before shifting into R (Reverse).

Push the button located immediately below the shift knob and pull the gearshift lever to the left sufficiently, and then shift into reverse (R) gear position.

Make sure the vehicle is completely stopped before shifting into R (Reverse).

Never operate the engine with the tachometer (rpm) in the red zone.

⚠ CAUTION

- When downshifting from fifth gear to fourth gear, caution should be taken not to inadvertently press the shift lever sideways in such a manner that the second gear is engaged. Such a drastic downshift may cause the engine speed to increase to the point that the tachometer will enter the red-zone. Such over-revving of the engine and transmission may possibly cause engine damage.
- Do not downshift more than 2 gears or downshift the gear when the engine is running at high speed (5,000 RPM or higher). Such a downshifting may damage the engine, clutch and the transmission.
- During cold weather, shifting may be difficult until the transmission lubricant is warmed up. This is normal and not harmful to the transmission.
- If you've come to a complete stop and it's hard to shift into 1st or R (Reverse), leave the shift lever at N (Neutral) position and release the clutch. Press the clutch pedal back down, and then shift into 1st or R (Reverse) gear position.

⚠ CAUTION

- To avoid premature clutch wear and damage, do not drive with your foot resting on the clutch pedal. Also, don't use the clutch to hold the vehicle stopped on an uphill grade, while waiting for a traffic light, etc.
- Do not use the shift lever as a handrest during driving, as this can result in premature wear of the transmission shift forks.
- To prevent possible damage to the clutch system, do not start with the 2nd (second) gear engaged except when you start on a slippery road.
- Do not overload the vehicle. Driving with the vehicle overloaded could cause abnormal friction heat to the clutch disk and damage the clutch cover and disk.

⚠ WARNING

- Before leaving the driver's seat, always set the parking brake fully and shut the engine off. Then make sure the transmission is shifted into 1st gear when the vehicle is parked on a level or uphill grade, and shifted into R (Reverse) on a downhill grade. Unexpected and sudden vehicle movement can occur if these precautions are not followed in the order identified.
- Do not use the engine brake (shifting from a high gear to lower gear) rapidly on slippery roads.
  The vehicle may slip causing an accident.

Using the clutch

The clutch should be pressed all the way to the floor before shifting, then released slowly. The clutch pedal should always be fully released while driving. Do not rest your foot on the clutch pedal while driving. This can cause unnecessary wear. Do not partially engage the clutch to hold the vehicle on an incline. This causes unnecessary wear. Use the foot brake or parking brake to hold the vehicle on an incline. Do not operate the clutch pedal rapidly and repeatedly.

⚠ CAUTION

When operating the clutch pedal, press the clutch pedal down fully. If you don't press the clutch pedal fully, the clutch may be damaged or noise may occur.

⚠ WARNING

Using the clutch

Depress the clutch pedal as far as possible. Be aware not to apply the pedal again before it returns to the normal position.
If the pedal is repeatedly depressed before returning to its normal position, the clutch system might be damaged.
Do not overload the vehicle. Starting or driving a vehicle in this situation generates too much frictional heat to the clutch disk which might cause damage to the clutch cover and disk.
When starting the vehicle or driving backwards, releasing the clutch pedal too soon after shifting the lever might turn off the engine and lead to an accident.

Downshifting

When you must slow down in heavy traffic or while driving up steep hills, downshift before the engine starts to labor. Downshifting reduces the chance of stalling and gives better

acceleration when you again need to increase your speed. When the vehicle is traveling down steep hills, downshifting helps maintain safe speed and prolongs brake life.

Good driving practices

- Never take the vehicle out of gear and coast down a hill. This is extremely hazardous. Always leave the vehicle in gear.
- Don't "ride" the brakes. This can cause them to overheat and malfunction. Instead, when you are driving down a long hill, shift to a lower gear.When you do this, engine braking will help slow down the vehicle.
- Slow down before shifting to a lower gear. This will help avoid over-revving the engine, which can cause damage.
- Slow down when you encounter cross winds. This gives you much better control of your vehicle.
- Be sure the vehicle is completely stopped before you attempt to shift into reverse. The transmission can be damaged if you do not.
- Exercise extreme caution when driving on a slippery surface. Be especially careful when braking, accelerating or shifting gears. On a slippery surface, an abrupt change in vehicle speed can cause the drive wheels to lose traction and the vehicle to go out of control.

⚠ WARNING

- When driving uphill or downhill, always shift to D (Drive) for driving forward or shift to R (Reverse) for driving backwards, and check the gear position indicated on the cluster before driving. Driving in the opposite direction of the selected gear can lead to a dangerous situation by shutting off the engine and affecting the braking performance.
- Always buckle-up! In a collision, an unbelted occupant is significantly more likely to be seriously injured or killed than a properly belted occupant.
- Avoid high speeds when cornering or turning.
- Do not make quick steering wheel movements, such as sharp lane changes or fast, sharp turns.
- The risk of rollover is greatly increased if you lose control of your vehicle at highway speeds.
- Loss of control often occurs if two or more wheels drop off the road-

way and the driver oversteers to reenter the roadway.

- In the event your vehicle leaves the roadway, do not steer sharply. Instead, slow down before pulling back into the travel lanes.
- Never exceed posted speed limits.

Automatic Transmission (AT) (if equipped)

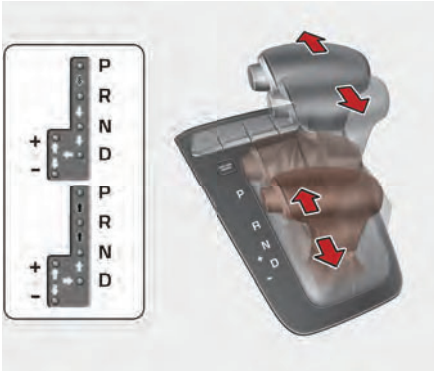

OYB050071L

➡ To shift, depress the brake pedal and press the button.

➡ Press the button when shifting.

⇨ The shift lever can be shifted freely.

Automatic Transmission operation

The AT has 6 forward speeds and one reverse speed.The individual speeds are selected automatically, depending on the position of the shift lever.

✻ NOTICE

The first few shifts on a new vehicle, if the battery has been disconnected, may be somewhat abrupt. This is a normal condition, and the shifting sequence will adjust after shifts are cycled a few times by the

TCM (Transmission Control Module) or PCM (Powertrain Control Module).

For smooth operation, depress the brake pedal when shifting from N (Neutral) to a forward or reverse gear.

⚠ WARNING

Automatic Transmission

- Always check the surrounding areas near your vehicle for people, especially children, before shifting a car into D (Drive) or R (Reverse).
- Before leaving the driver's seat, always make sure the shift lever is in the P (Park) position; then set the parking brake fully and shut the engine off. Unexpected and sudden vehicle movement can occur if these precautions are not followed in the order identified.
- Do not use the engine brake (shifting from a high gear to lower gear) rapidly on slippery roads.
  The vehicle may slip causing an accident.

⚠ CAUTION

- To avoid damage to your transmission, do not accelerate the engine in R (Reverse) or any forward gear position with the brakes on.
- When stopped on an incline, do not hold the vehicle stationary with engine power. Use the service brake or the parking brake.
- Do not shift from N (Neutral) or P (Park) into D (Drive), or R (Reverse) when the engine is above idle speed.

Transmission ranges

The indicator in the instrument cluster displays the shift lever position when the ignition switch or ENGINE START/STOP button is in the ON position.

P (Park)

Always come to a complete stop before shifting into P (Park).This position locks the transmission and prevents the drive wheels from rotating.

⚠ WARNING

- Shifting into P (Park) while the vehicle is in motion will cause the drive wheels to lock which will cause you to lose control of the vehicle.
- Do not use the P (Park) position in place of the parking brake. Always make sure the shift lever is latched in the P (Park) position and set the parking brake fully.

- Never leave a child unattended in a vehicle.

⚠ CAUTION

The transmission may be damaged if you shift into P (Park) while the vehicle is in motion.

R (Reverse)

Use this position to drive the vehicle backward.

⚠ CAUTION

Always come to a complete stop before shifting into or out of R (Reverse); you may damage the transmission if you shift into R (Reverse) while the vehicle is in motion, except as explained in "Rocking the vehicle" in this section.

N (Neutral)

The wheels and transmission are not engaged. The vehicle will roll freely even on the slightest incline unless the parking brake or service brakes are applied.

⚠ WARNING

Do not drive with the shift lever in N (Neutral).

The engine brake will not work and lead to an accident.

Parking in N (Neutral) gear

Follow below steps when parking and you want the vehicle to move when pushed.

1. After parking your vehicle, step on the brake pedal and move the shift lever to [P] with the ignition switch or ENGINE START/STOP button in [ON] or while the engine is running.
2. If the parking brake is applied unlock the parking brake.
3. While pressing the brake pedal, turn the ignition switch or ENGINE START/STOP button [OFF].
   - For smart key equipped vehicles, the ignition switch or ENGINE START/STOP button can be moved to [OFF] only when the shift lever is in [P].
4. Change the gear shift lever to [N] (Neutral) while pressing the brake pedal and pushing [SHIFT LOCK RELEASE] button or inserting, pressing down a tool (e.g. flat-head screw-driver) into the [SHIFT LOCK RELEASE] access hole at the same time. Then, the vehicle will move when external force is applied.

⚠ CAUTION

- With the exception of parking in neutral gear, always park the vehicle in [P] (Park) for safety and engage the parking brake.
- Before parking in [N] (Neutral) gear, first make sure the parking ground is level and flat. Do not park in [N] gear on any slopes or gradients.
  If parked and left in [N], the vehicle may move and cause serious damage and injury.

D (Drive)

This is the normal forward driving position. The transmission will automatically shift through a 6-gear sequence, providing the best fuel economy and power.

For extra power when passing another vehicle or climbing grades, depress the accelerator fully, at which time the transmission will automatically downshift to the lower gear.

✻ NOTICE

Always come to a complete stop before shifting into D (Drive).

⚠ WARNING

- Do not shift the gear to N (Neutral) when driving. If the gear is shifted to N (Neutral) while driving, the vehicle loses the ability to provide engine braking. Doing so may increase the risk of an accident.
- The vehicle may move due to external impact if the transmission is not in P (Parking) position during parking or stopping the vehicle. If you are away from the vehicle even for a short moment, always engage the transmission in P (Parking) position for safety, apply the parking brake, and turn off the ignition while pressing the brake pedal.

Sports mode (if equipped)



OYB050059L

Whether the vehicle is stationary or in motion, sports mode is selected by pushing the shift lever from the D (Drive) position into the manual gate. To return to D (Drive) range operation, push the shift lever back into the main gate.

In sports mode, moving the shift lever backwards and forwards will allow you to make gearshifts rapidly. In contrast to a Manual Transmission, the sports mode allows gearshifts with the accelerator pedal depressed.

Using the shift lever

Up (+) : Push the lever forward once to shift up one gear.

Down (–) : Pull the lever backwards once to shift down one gear.

✻ NOTICE

- In sports mode, the driver must execute upshifts in accordance with road conditions, taking care to keep the engine speed below the red zone.
- In sports mode, only the 6 forward gears can be selected. To reverse or park the vehicle, move the shift lever to the R (Reverse) or P (Park) position as required.
- In sports mode, downshifts are made automatically when the vehicle slows down. When the vehicle stops, 1st gear is automatically selected.
- In sports mode, when the engine rpm approaches the red zone shift points are varied to upshift automatically.
- To maintain the required levels of vehicle performance and safety, the function may not execute certain gearshifts when the shift lever is operated.
- When driving on a slippery road, push the shift lever forward into the +(up) position. This causes the transmission to shift into the 2nd gear which is better for smooth driving on a slippery road. Push the shift lever to the –(down) side to shift back to the 1st gear.

Shift lock system (if equipped)

For your safety, Automatic Transmission has a shift lock system which prevents shifting the transmission from P (Park) into R (Reverse) unless the brake pedal is depressed.

To shift the transmission from P (Park) into R (Reverse):
1. Depress and hold the brake pedal.
2. Move the shift lever.

If the brake pedal is repeatedly depressed and released with the shift lever in the P (Park) position, a chattering noise near the shift lever may be heard. This is a normal condition.

⚠ WARNING

Always fully depress the brake pedal before and while shifting out of the P (Park) position into another position to avoid inadvertent motion of the vehicle which could injure persons in or around the car.

Shift-lock override

Type A

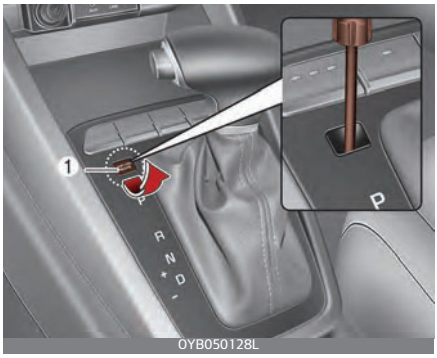

Type B

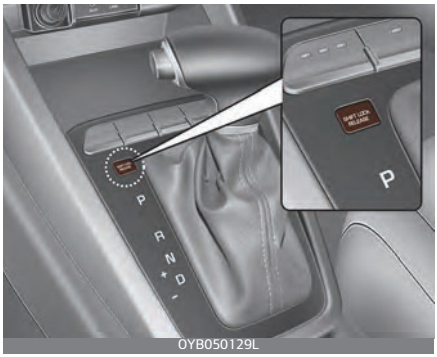

If the shift lever cannot be moved from the P (Park) or N (Neutral) position into R (Reverse) position with the brake pedal depressed, continue depressing the brake, then do the following:

Type A

1. Carefully remove the cap (1) covering the shift-lock override access hole.

2. Insert a screwdriver into the access hole and press down on the screwdriver.
3. Move the shift lever.
4. Have the system inspected by a professional workshop. Kia recommends to visit an authorized Kia dealer/service partner.

Type B

1. Press the shift-lock release button.
2. Move the shift lever.
3. Have the system inspected by a professional workshop. Kia recommends to visit an authorized Kia dealer/service partner.

Ignition key interlock system (if equipped)

The ignition key cannot be removed unless the shift lever is in the P (Park) position.

Good driving practices

- Never move the shift lever from P (Park) or N (Neutral) to any other position with the accelerator pedal depressed.
- Never move the shift lever into P (Park) when the vehicle is in motion.
- Be sure the car is completely stopped before you attempt to shift into R (Reverse) or D (Drive).
- Never take the car out of gear and coast down a hill. This may be extremely hazardous. Always leave the car in gear when moving.
- Do not "ride" the brakes. This can cause them to overheat and malfunction. Instead, when you are driving down a long hill, slow down and shift to a lower gear. When you do this, engine braking will help slow the car.
- Slow down before shifting to a lower gear. Otherwise, the lower gear may not be engaged.
- Always use the parking brake. Do not depend on placing the transmission in P (Park) to keep the car from moving.
- Exercise extreme caution when driving on a slippery surface. Be especially careful when braking, accelerating or shifting gears. On a slippery surface, an abrupt change in vehicle speed can cause the drive wheels to lose traction and the vehicle to go out of control.
- Optimum vehicle performance and economy is obtained by smoothly depressing and releasing the accelerator pedal.

⚠ WARNING

- When driving uphill or downhill, always shift to D (Drive) for driving forward or shift to R (Reverse) for driving backwards, and check the gear position indicated on the

cluster before driving.
Driving in the opposite direction of the selected gear can lead to a dangerous situation by shutting off the engine and affecting the braking performance.

- Always buckle-up! In a collision, an unbelted occupant is significantly more likely to be seriously injured or killed than a properly belted occupant.
- Avoid high speeds when cornering or turning.
- Do not make quick steering wheel movements, such as sharp lane changes or fast, sharp turns.
- The risk of rollover is greatly increased if you lose control of your vehicle at highway speeds.
- Loss of control often occurs if two or more wheels drop off the roadway and the driver oversteers to reenter the roadway.
- In the event your vehicle leaves the roadway, do not steer sharply. Instead, slow down before pulling back into the travel lanes.
- Never exceed posted speed limits.

⚠ WARNING

If your vehicle becomes stuck in snow, mud, sand, etc., then you may attempt to rock the vehicle free by moving it forward and backward. Do not attempt this procedure if people or objects are anywhere near the vehicle. During the rocking operation the vehicle may suddenly move forward or backward as it becomes unstuck, causing injury or damage to nearby people or objects.

Moving up a steep grade from a standing start

To move up a steep grade from a standing start, depress the brake pedal, shift the shift lever to D (Drive). Select the appropriate gear depending on load weight and steepness of the grade, and release the parking brake. Depress the accelerator gradually while releasing the service brakes.

When accelerating from a stop on a steep hill, the vehicle may have a tendency to roll backwards.

⚠ WARNING

When you start after stopping on a steep incline, even if the shift in D (Drive), if you do not depress the accelerator or brake pedal, the vehicle may roll backwards, which can cause a big accident. Always come to a complete stop before shifting into D (Drive).

Dual Clutch Transmission (DCT) (if equipped)

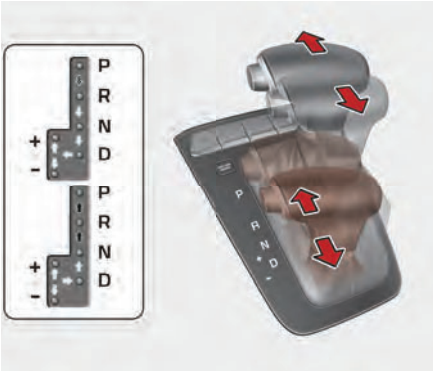

Depress the brake pedal and the lock release button when shifting.

Press the lock release button when shifting.

The *shift lever* can be shifted freely.

* To move the shift lever from/to P (Parking) or between R (Reverse) and D (Drive), you must depress the brake pedal for the vehicle to stand still.

Dual Clutch Transmission operation

DCT has 7 forward speeds and one reverse speed.

The individual speeds are selected automatically in the D (Drive) position.

⚠ WARNING

To reduce the risk of serious injury or death:

- ALWAYS check the surrounding areas near your vehicle for people, especially children, before shifting a vehicle into D (Drive) or R (Reverse).
- Before leaving the driver's seat, always make sure the shift lever is in the P (Park) position, then set the parking brake, and place the ignition switch or ENGINE START/STOP button in the LOCK/OFF position. Unexpected and sudden vehicle movement can occur if these precautions are not followed.
- When using Manual Shift Mode, use caution when shifting from a higher gear to a lower gear on slippery roads. This could cause the tires to slip and may result in an accident.
- To avoid damage to your transmission, do not try to accelerate with the shift lever in R (Reverse) or any forward gear position with the brake engaged.
- When stopped on a slope, do not hold the vehicle with accelerator pedal. Engage the service brake or the parking brake.

- Dual Clutch Transmission gives the driving feel of a Manual Transmission, yet provides the

ease of a fully Automatic Transmission. Unlike a traditional Automatic Transmission, the gear shifting can be felt (and heard) on Dual Clutch Transmission
  - Think of it as an automatically shifting Manual Transmission.
  - Shift into Drive range and get fully automatic shifting, similar to a conventional Automatic Transmission.
- Dual Clutch Transmission adopts dry-type dual clutch, which is different from torque converter of Automatic Transmission, and shows better acceleration performance during driving. But, initial launch might be little bit slower than Automatic Transmission.
- The dry-type clutch transfers torque and provides a direct driving feeling which may feel different from a conventional Automatic Transmission with a torque converter.This may be more noticeable when starting from a stop or low vehicle speed.
- When rapidly accelerating at low vehicle speed, engine could rev at high rpm depending on vehicle drive condition.
- For smooth launch uphill, press down the accelerator pedal smoothly depending on the current conditions.
- If you release your foot from the accelerator pedal at low vehicle speed, you may feel strong engine brake, which is similar to Manual Transmission.
- When driving downhill, you may use Sports Mode to down shift to a lower gear in order to control your speed without using the brake pedal excessively.
- When you turn the engine on and off, you may hear clicking sounds as the function goes through a self test. This is a normal sound for the Dual Clutch Transmission.
- Always come to a complete stop before shifting into D (Drive) or R (Reverse).
- Do not put the shift lever in N (Neutral) while driving.

⚠ WARNING

Due to transmission failure, the vehicle may not move and the position indicator (D, R) will blink on the cluster. In this case, have the system checked by a professional workshop. Kia recommends to visit an authorized Kia dealer/service partner.

LCD display for warning message

DCT warning messages

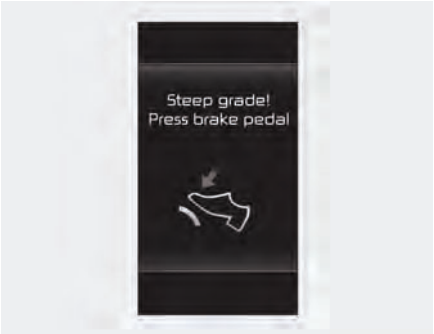

OJA050136L

This warning message is displayed when vehicle is driven slowly on a grade and the vehicle detects that the brake pedal is not applied.

Steep grade

Driving up hills or on steep grades:

- To hold the vehicle on an incline use the foot brake or the parking brake.
- When in stop-and-go traffic on an incline, keep some distance ahead before moving the vehicle forward. Then hold the vehicle on the incline with the foot brake.
- If the vehicle is held on a hill by applying the accelerator pedal or by creeping with brake pedal disengaged, the clutch and transmission may overheat which can result in damage. At this time, a warning message will appear on the LCD display.
- If the LCD warning is active, the foot brake must be applied.
- Ignoring the warnings can lead to damage to the transmission.

Transmission high temperature



OJA050149L

- Under certain conditions, such as repeated stop-and-go launches on steep grades, sudden take off or acceleration, or other harsh driving conditions, the transmission clutch temperatures will increase excessively. Finally the clutch in transmission could be overheated.
- When the clutch is overheated, the safe protection mode engages and the gear position indicator on the cluster blinks with a chime. At this time, "Transmission temp. is high! Stop safely" warning message will appear on the LCD display and driving may not be smooth.
- If this occurs, pull over to a safe location, stop the vehicle with the engine running, apply the brakes

and shift the vehicle to P (Park), and allow the transmission to cool.

- If you ignore this warning, the driving condition may become worse. You may experience abrupt shifts, frequent shifts, or jerkiness. To return to the normal driving condition, stop the vehicle and apply the foot brake or shift into P (Park).
  Then allow the transmission to cool for a few minutes with engine on, before driving off.
- When possible, drive the vehicle smoothly.

Transmission overheated



OJA050123L



OJA050124L



OJA050125L

- If the vehicle continues to be driven and the clutch temperatures reach the maximum temperature limit, the " Transmission Hot! Park with engine on" warning will be displayed. When this occurs the clutch is disabled until the clutch cools to normal temperatures.
- The warning will display a time to wait for the transmission to cool.
- If this occurs, pull over to a safe location, stop the vehicle with the engine running, apply the brakes and shift the vehicle to P (Park), and allow the transmission to cool.

- When the message "Trans cooled. Resume driving." appears you can continue to drive your vehicle.
- When possible, drive the vehicle smoothly.

If any of the warning messages in the LCD display continue to blink, for your safety, have the system checked by a professional workshop. Kia recommends to visit an authorized Kia dealer/service partner.

Transmission ranges

The indicator in the instrument cluster displays the shift lever position when the ignition switch or ENGINE START/STOP button is in the ON position.

P (Park)

Always come to a complete stop before shifting into P (Park).

To shift from P (Park), you must depress firmly on the brake pedal and make sure your foot is off the accelerator pedal.

The shift lever must be in P (Park) before turning the engine off.

⚠ WARNING

- Shifting into P (Park) while the vehicle is in motion may cause you to lose control of the vehicle.
- After the vehicle has stopped, always make sure the shift lever is in P (Park), apply the parking brake, and turn the engine off.
- Do not use the P (Park) position in place of the parking brake.

R (Reverse)

Use this position to drive the vehicle backward.

⚠ CAUTION

Always come to a complete stop before shifting into or out of R (Reverse); you may damage the transmission if you shift into R (Reverse) while the vehicle is in motion.

N (Neutral)

The wheels and transmission are not engaged.

⚠ WARNING

Do not shift into gear unless your foot is firmly on the brake pedal. Shifting into gear when the engine is running at high speed can cause the vehicle to move very rapidly. You could lose control of the vehicle and hit people or objects.

⚠ WARNING

Do not drive with the shift lever in N (Neutral).

The engine brake will not work and lead to an accident.

Parking in N (Neutral) gear

Follow below steps when parking and you want the vehicle to move when pushed.

1. After parking your vehicle, step on the brake pedal and move the shift lever to P with the ignition switch or ENGINE START/STOP button in ON or while the engine is running.
2. If the parking brake is applied unlock the parking brake.
3. While pressing the brake pedal, turn the ignition switch or ENGINE START/STOP button OFF.
   - For smart key equipped vehicles, the ignition switch or ENGINE START/STOP button can be moved to OFF only when the shift lever is in P.
4. Change the gear shift lever to N (Neutral) while pressing the brake pedal and pushing [SHIFT LOCK RELEASE] button or inserting, pressing down a tool (e.g. flat-head screw-driver) into the [SHIFT LOCK RELEASE] access hole at the same time. Then, the vehicle will move when external force is applied.

⚠ CAUTION

- With the exception of parking in neutral gear, always park the vehicle in P (Park) for safety and engage the parking brake.
- Before parking in N (Neutral) gear, first make sure the parking ground is level and flat. Do not park in N gear on any slopes or gradients.
  If parked and left in N, the vehicle may move and cause serious damage and injury.

D (Drive)

This is the normal driving position. The transmission will automatically shift through a 7 gear sequence, providing the best fuel economy and power.

For extra power when passing another vehicle or driving uphill depress the accelerator pedal further until you feel the transmission downshift to a lower gear.

To stop the vehicle during driving, please press brake pedal fully to prevent unintended movement.

Sports mode (if equipped)



OYB050059L

Whether the vehicle is stationary or in motion, sports mode is selected by pushing the shift lever from the D (Drive) position into the manual gate. To return to D (Drive) range operation, push the shift lever back into the main gate.

In sports mode, moving the shift lever backwards and forwards will allow you to make gearshifts rapidly. In contrast to a Manual Transmission, the sports mode allows gearshifts with the accelerator pedal depressed.

Using the shift lever

Up (+) : Push the lever forward once to shift up one gear.

Down (–) : Pull the lever backwards once to shift down one gear.

✻ NOTICE

- In sports mode, the driver must execute upshifts in accordance with road conditions, taking care to keep the engine speed below the red zone.
- In sports mode, only the 7 forward gears can be selected. To reverse or park the vehicle, move the shift lever to the R (Reverse) or P (Park) position as required.
- In sports mode, downshifts are made automatically when the vehicle slows down. When the vehicle stops, 1st gear is automatically selected.
- In sports mode, when the engine rpm approaches the red zone shift points are varied to upshift automatically.
- If the driver presses the lever to + (Up) or – (Down) position, the transmission may not make the requested gear change if the next gear is outside of the allowable engine rpm range. The driver must execute upshifts in accordance with road conditions, taking care to keep the engine rpms below the red zone.

Shift lock system (if equipped)

For your safety, Dual Clutch Transmission has a shift lock system which prevents shifting the transmission from P (Park) into R (Reverse) unless the brake pedal is depressed.

To shift the transmission from P (Park) into R (Reverse):

1. Depress and hold the brake pedal.
2. Start the engine or turn the ignition switch or ENGINE START/STOP button to the ON position.
3. Move the shift lever.

If the brake pedal is repeatedly depressed and released with the shift lever in the P (Park) position, a chattering noise & vibration near the shift lever may be heard. This is a normal condition.

⚠ WARNING

Always fully depress the brake pedal before and while shifting out of the P (Park) position into another position to avoid inadvertent motion of the vehicle which could injure persons in or around the car.

Shift-lock override

Type A

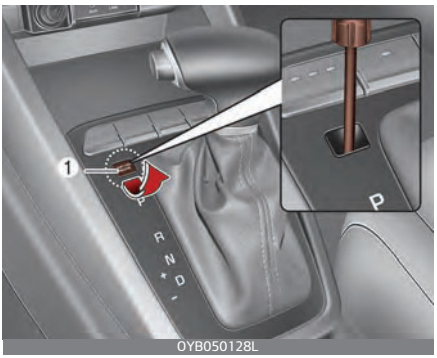

Type B

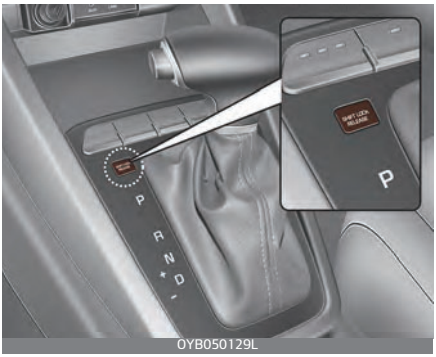

If the shift lever cannot be moved from the P (Park) or N (Neutral) position into R (Reverse) position with the brake pedal depressed, continue depressing the brake, then do the following:

Type A

1. Carefully remove the cap (1) covering the shift-lock override access hole.
2. Insert a screwdriver into the access hole and press down on the screwdriver.
3. Move the shift lever.
4. Have the system inspected by a professional workshop. Kia recommends to visit an authorized Kia dealer/service partner.

Type B

1. Press the shift-lock release button.
2. Move the shift lever.
3. Have the system inspected by a professional workshop. Kia rec-

ommends to visit an authorized Kia dealer/service partner.

Ignition key interlock system (if equipped)

The ignition key cannot be removed unless the shift lever is in the P (Park) position.

Good driving practices

- Never move the shift lever from P (Park) or N (Neutral) to any other position with the accelerator pedal depressed.
- Never move the shift lever into P (Park) when the vehicle is in motion.
- Be sure the car is completely stopped before you attempt to shift into R (Reverse) or D (Drive).
- Never take the car out of gear and coast down a hill. This may be extremely hazardous. Always leave the car in gear when moving.
- Do not "ride" the brakes. This can cause them to overheat and malfunction. Instead, when you are driving down a long hill, slow down and shift to a lower gear. When you do this, engine braking will help slow the car.
- Slow down before shifting to a lower gear. Otherwise, the lower gear may not be engaged.
- Always use the parking brake. Do not depend on placing the transmission in P (Park) to keep the car from moving.
- Exercise extreme caution when driving on a slippery surface. Be especially careful when braking, accelerating or shifting gears. On a slippery surface, an abrupt change in vehicle speed can cause the drive wheels to lose traction and the vehicle to go out of control.
- Optimum vehicle performance and economy is obtained by smoothly depressing and releasing the accelerator pedal.

⚠ WARNING

- When driving uphill or downhill, always shift to D (Drive) for driving forward or shift to R (Reverse) for driving backwards, and check the gear position indicated on the cluster before driving.
  Driving in the opposite direction of the selected gear can lead to a dangerous situation by shutting off the engine and affecting the braking performance.
- Always buckle-up! In a collision, an unbelted occupant is significantly more likely to be seriously injured or killed than a properly belted occupant.
- Avoid high speeds when cornering or turning.

- Do not make quick steering wheel movements, such as sharp lane changes or fast, sharp turns.
- The risk of rollover is greatly increased if you lose control of your vehicle at highway speeds.
- Loss of control often occurs if two or more wheels drop off the roadway and the driver oversteers to reenter the roadway.
- In the event your vehicle leaves the roadway, do not steer sharply. Instead, slow down before pulling back into the travel lanes.
- Never exceed posted speed limits.

⚠ WARNING

If your vehicle becomes stuck in snow, mud, sand, etc., then you may attempt to rock the vehicle free by moving it forward and backward. Do not attempt this procedure if people or objects are anywhere near the vehicle. During the rocking operation the vehicle may suddenly move forward of backward as it becomes unstuck, causing injury or damage to nearby people or objects.

Brake system

Power brakes

Your vehicle has power-assisted brakes that adjust automatically through normal usage.

In the event that the power-assisted brakes lose power because of a stalled engine or some other reason, you can still stop your vehicle by applying greater force to the brake pedal than you normally would. The stopping distance, however, will be longer.

When the engine is not running, the reserve brake power is partially depleted each time the brake pedal is applied. Do not pump the brake pedal when the power assist has been interrupted.

Pump the brake pedal only when necessary to maintain steering control on slippery surfaces.

⚠ WARNING

Brakes

- Do not drive with your foot resting on the brake pedal. This will create abnormal high brake temperatures, excessive brake lining and pad wear, and increased stopping distances.
- When descending a long or steep hill, shift to a lower gear and avoid continuous application of the

brakes. Continuous brake application will cause the brakes to overheat and could result in a temporary loss of braking performance.
- Wet brakes may impair the vehicle's ability to safely slow down; the vehicle may also pull to one side when the brakes are applied. Applying the brakes lightly will indicate whether they have been affected in this way. Always test your brakes in this fashion after driving through deep water. To dry the brakes, apply them lightly while maintaining a safe forward speed until brake performance returns to normal.
- Always, confirm the position of the brake and accelerator pedal before driving. If you don't check the position of the accelerator and brake pedal before driving, you may depress the accelerator instead of the brake pedal. It may cause a serious accident.

In the event of brake failure

If service brakes fail to operate while the vehicle is in motion, you can make an emergency stop with the parking brake. The stopping distance, however, will be much greater than normal.

⚠ WARNING

Parking brake

Applying the parking brake while the vehicle is moving at normal speeds can cause a sudden loss of control of the vehicle. If you must use the parking brake to stop the vehicle, use great caution in applying the brake.

Disc brakes wear indicator

Your vehicle has disc brakes.

When your brake pads are worn and new pads are required, you will hear a high-pitched warning sound from your front brakes or rear brakes. You may hear this sound come and go or it may occur whenever you depress the brake pedal.

Please remember that some driving conditions or climates may cause a brake squeal when you first apply (or lightly apply) the brakes. This is normal and does not indicate a problem with your brakes.

⚠ CAUTION

- To avoid costly brake repairs, do not continue to drive with worn brake pads.
- Always replace the front or rear brake pads as pairs.

⚠ WARNING

Brake wear

This brake wear warning sound means your vehicle needs service. If you ignore this audible warning, you will eventually lose braking performance, which could lead to a serious accident.

Rear drum brakes (if equipped)

Your rear drum brakes do not have wear indicators. Therefore, have the rear brake linings inspected if you hear a rear brake rubbing noise. Also have your rear brakes inspected each time you change or rotate your tires and when you have the front brakes replaced.

Parking brake

Applying the parking brake


OYB050060L

To engage the parking brake, first apply the foot brake and then pull up the parking brake lever as far as possible.

In addition it is recommended that when parking the vehicle on a incline, the shift lever should be in a low gear on Manual Transmission/ Intelligent Manual Transmission vehicles or in the P (Park) position on Automatic Transmission/Dual Clutch Transmission vehicles.

⚠ CAUTION

- Driving with the parking brake applied will cause excessive brake pad and brake rotor wear.
- Do not operate the parking brake while the vehicle is moving except in an emergency situation. It could damage the vehicle system and make endanger driving safety.

Releasing the parking brake



OYB050061L

To release the parking brake, first apply the foot brake and pull up the parking brake lever slightly. Sec-

ondly depress the release button (1) and lower the parking brake lever (2) while holding the button.

If the parking brake does not release or does not release all the way, have the system checked by a professional workshop. Kia recommends to visit an authorized Kia dealer/service partner.

- If your vehicle is equipped with an Automatic Transmission/Dual Clutch Transmission, don't let your vehicle creep forward. To avoid creeping forward, keep your foot firmly on the brake pedal when the vehicle is stopped.
- Be cautious when parking on a hill. Firmly engage the parking brake and place the shift lever in P (Automatic Transmission/Dual Clutch Transmission) or in first or reverse gear (Manual Transmission/Intelligent Manual Transmission). If your vehicle is facing downhill, turn the front wheels into the curb to help keep the vehicle from rolling. If your vehicle is facing uphill, turn the front wheels away from the curb to help keep the vehicle from rolling. If there is no curb or if it is required by other conditions to keep the vehicle from rolling, block the wheels.
- Under some conditions your parking brake can freeze in the engaged position. This is most likely to happen when there is an accumulation of snow or ice around or near the rear brakes or if the brakes are wet. If there is a risk that the parking brake may freeze, apply it only temporarily while you put the shift lever in P (Automatic Transmission/Dual Clutch Transmission) or in first or reverse gear (Manual Transmission/Intelligent Manual Transmission) and block the rear wheels so the vehicle cannot roll. Then release the parking brake.
- Do not hold the vehicle on the upgrade with the accelerator pedal. This can cause the transmission to overheat. Always use the brake pedal or parking brake.

⚠ WARNING

- To prevent unintentional movement when stopped and leaving the vehicle, do not use the gearshift lever in place of the parking brake. Set the parking brake AND make sure the gearshift lever is securely positioned in P (Park) for Automatic Transmission/Dual Clutch Transmission equipped vehicles.
- Never allow anyone who is unfamiliar with the vehicle to touch the parking brake. If the parking

brake is released unintentionally, serious injury may occur.
- All vehicles should always have the parking brake fully engaged when parking to avoid inadvertent movement of the vehicle which can injure occupants or pedestrians.



Check the brake warning light by turning the ignition switch or ENGINE START/STOP button ON (do not start the engine). This light will be illuminated when the parking brake is applied with the ignition switch or ENGINE START/STOP button in the START or ON position.

Before driving, be sure the parking brake is fully released and the brake warning light is off.

If the brake warning light remains on after the parking brake is released while engine is running, there may be a malfunction in the brake system. Immediate attention is necessary.

If at all possible, cease driving the vehicle immediately. If that is not possible, use extreme caution while operating the vehicle and only continue to drive the vehicle until you can reach a safe location or repair shop.

Anti-lock brake system (ABS) (if equipped)

⚠ WARNING

ABS (or ESC) will not prevent accidents due to improper or dangerous driving maneuvers. Even though vehicle control is improved during emergency braking, always maintain a safe distance between you and objects ahead. Vehicle speeds should always be reduced during extreme road conditions.

The braking distance for cars equipped with an anti-lock braking system (or Electronic Stability Control system) may be longer than for those without it in the following road conditions.

During these conditions the vehicle should be driven at reduced speeds:
- Rough, gravel or snow-covered roads.
- With tire chains installed.
- On roads where the road surface is pitted or has different surface height.

The safety features of an ABS (or ESC) equipped vehicle should not be tested by high speed driving or cornering. This could endanger the safety of yourself or others.

ABS continuously senses the speed of the wheels. If the wheels are going to lock, the ABS repeatedly

modulates the hydraulic brake pressure to the wheels.

When you apply your brakes under conditions which may lock the wheels, you may hear a "tik-tik" sound from the brakes, or feel a corresponding sensation in the brake pedal. This is normal and it means your ABS is active.

In order to obtain the maximum benefit from your ABS in an emergency situation, do not attempt to modulate your brake pressure and do not try to pump your brakes. Press your brake pedal as hard as possible or as hard as the situation warrants and allow ABS to control the force being delivered to the brakes.

✻ NOTICE

A click sound may be heard in the engine compartment when the vehicle begins to move after the engine is started. These conditions are normal and indicate that the anti-lock brake system is functioning properly.

- Even with the anti-lock brake system, your vehicle still requires sufficient stopping distance. Always maintain a safe distance from the vehicle in front of you.
- Always slow down when cornering. The anti-lock brake system cannot prevent accidents resulting from excessive speeds.
- On loose or uneven road surfaces, operation of the anti-lock brake system may result in a longer stopping distance than for vehicles equipped with a conventional brake system.



⚠ CAUTION

- If the ABS warning light is on and stays on, you may have a problem with the ABS. In this case, however, your regular brakes will work normally.
- The ABS warning light will stay on for approximately 3 seconds after the ignition switch or ENGINE START/STOP button is ON. During that time, ABS will go through self diagnosis and the light will go off if everything is normal. If the light stays on, you may have a problem with your ABS. In this case, have the system checked by a professional workshop. Kia recommends to visit an authorized Kia dealer/service partner.

⚠ CAUTION

- *When you drive on a road having poor traction, such as an icy road, and operate your brakes continuously, the ABS will be active continuously and the ABS warning light may illuminate. Pull your car over to a safe place and stop the engine.*
- Restart the engine. If the ABS warning light is off, then your ABS is normal. Otherwise, you may have a problem with ABS. In this case, have the system checked by a professional workshop. Kia recommends to visit an authorized Kia dealer/service partner.

✻ NOTICE

When you jump start your vehicle because of a drained battery, the engine may not run as smoothly and the ABS warning light may turn on at the same time. This happens because of the low battery voltage. It does not mean your ABS is malfunctioning.

- Do not pump your brakes!
- Have the battery recharged before driving the vehicle.

Electronic Stability Control (ESC) (if equipped)



Electronic Stability Control (ESC) is designed to stabilize the vehicle during cornering maneuvers. ESC checks where you are steering and where the vehicle is actually going.

ESC applies the brakes at individual wheels and intervenes in the engine management system to stabilize the vehicle.

⚠ WARNING

Never drive too fast for the road conditions or too quickly when cornering. Electronic stability Control (ESC) will not prevent accidents. Excessive speed in turns, abrupt maneuvers and hydroplaning on wet surfaces can still result in serious accidents. Only a safe and attentive driver can prevent accidents by avoiding maneuvers that cause the vehicle to lose traction. Even with ESC installed, always follow all the normal precautions for driving –

including driving at safe speeds for the conditions.

Electronic Stability Control is an electronic system designed to help the driver maintain vehicle control under adverse conditions. It is not a substitute for safe driving practices. Factors including speed, road conditions and driver steering input can all affect whether ESC will be effective in preventing a loss of control. It is still your responsibility to drive and corner at reasonable speeds and to leave a sufficient margin of safety.

When you apply your brakes under conditions which may lock the wheels, you may hear a "tik-tik" sound from the brakes, or feel a corresponding sensation in the brake pedal. This is normal and it means your ESC is active.

✻ NOTICE

A click sound may be heard in the engine compartment when the vehicle begins to move after the engine is started. These conditions are normal and indicate that Electronic Stability Control is functioning properly.

ESC operation

ESC ON condition

- When the ignition is turned ON, ESC and ESC OFF indicator lights illuminate for approximately 3 seconds, then ESC is turned on.
- Press the ESC OFF button after turning the ignition ON to turn ESC off. (ESC OFF indicator will illuminate). To turn ESC on, press the ESC OFF button (ESC OFF indicator light will go off).
- When starting the engine, you may hear a slight ticking sound. This is ESC performing an automatic system self-check and does not indicate a problem.

When operating



When ESC is in operation, the ESC indicator light blinks.

- When Electronic Stability Control is operating properly, you can feel a slight pulsation in the vehicle. This is only the effect of brake control and indicates nothing unusual.
- When moving out of the mud or driving on a slippery road, the engine rpm (revolution per minute) may not be increased even if you press the accelerator pedal deeply. This is to maintain the stability and traction of the vehicle and does not indicate a problem.

ESC OFF condition

OFF To cancel ESC operation :

- State 1



0JA050126L

Press the ESC OFF button shortly (ESC OFF indicator light and message illuminates). At this state, the engine control function does not operate. In other words, the traction control function does not operate but only the brake control function operates.

- State 2



0JA050127L

Press the ESC OFF button for more than 3 seconds. ESC OFF indicator light and message illuminate and ESC OFF warning chime will sound. At this state, the engine control function and brake control function does not operate. In other words, the vehicle stability control function does not operate any more.

If the ignition switch or ENGINE START/STOP button is placed to the LOCK/OFF position when ESC is off, ESC remains off. Upon restarting the engine, ESC will automatically turn on again.

Indicator light

ESC indicator light



ESC OFF indicator light



When ignition switch or ENGINE START/STOP button is turned to ON, the indicator light illuminates, then goes off if ESC is operating normally.

The ESC indicator light blinks whenever ESC is operating or illuminates when ESC fails to operate.

ESC OFF indicator light comes on when ESC is turned off with the button.

⚠ CAUTION

Driving with varying tire or wheel sizes may cause ESC to malfunction. When replacing tires, make sure they are the same size as your original tires.

⚠ WARNING

Electronic Stability Control is only a driving aid; use precautions for safe driving by slowing down on curved, snowy, or icy roads. Drive slowly and don't attempt to accelerate whenever the ESC indicator light is blinking, or when the road surface is slippery.

ESC OFF usage

When driving

- ESC should be turned on for daily driving whenever possible.
- To turn ESC off while driving, press the ESC OFF button while driving on a flat road surface.

Never press the ESC OFF button while ESC is operating (ESC indicator light blinks).

If ESC is turned off while ESC is operating, the vehicle may slip out of control.

✻ NOTICE

- When operating the vehicle on a dynamometer, ensure that ESC is turned off (ESC OFF light illuminated).
- Turning ESC off does not affect ABS or brake system operation.

⚠ WARNING

Never press the ESC OFF button while ESC is operating.

If ESC is turned off while ESC is operating, the vehicle may go out of control.

To turn ESC off while driving, press the ESC OFF button while driving on a flat road surface.

Hill-start assist control (HAC) (if equipped)

Hill start Assist Control is a comfort function. The main intend is to prevent the vehicle from rolling backwards while driving off uphill on an inclined surface. HAC holds the braking pressure builtup by driver during stopping procedure for 2 seconds after releasing brake pedal.

During the pressure-hold period, the driver has enough time to press the accelerator pedal to drive off.

The braking pressure is reduced as soon as the detects the driver's intention to drive off.

⚠ WARNING

HAC is usually activated only for 2 seconds. The driver should be careful from the rolling backward causing the accident with behind objects or human, when the driver may feel the unintended rolling backward while driving off on hill due to insufficient brake hold pressure built-up by driver during stopping procedure.

✻ NOTICE

- HAC does not operate when the transmission shift lever is in the P (Park) or N (Neutral) position.
- HAC activates even though ESC is off but it does not activate when ESC has malfunctioned.

Vehicle stability management (VSM) (if equipped)

This function provides further enhancements to vehicle stability and steering responses when a vehicle is driving on a slippery road or a vehicle detected changes in coefficient of friction between right wheels and left wheels when braking.

VSM operation

When VSM is in operation, ESC indicator light (🚗) blinks.

When the vehicle stability management is operating properly, you can feel a slight pulsation in the vehicle. This is only the effect of brake control and indicates nothing unusual.

VSM does not operate when:

- Driving on bank road such as gradient or incline
- Driving rearward
- ESC OFF indicator light (🚗 OFF) remains on the instrument cluster
- EPS indicator light remains on the instrument cluster

VSM operation off

If you press the ESC OFF button to turn off ESC, VSM will also cancel and the ESC OFF indicator light (🚗 OFF) illuminates.

To turn on VSM, press the button again. The ESC OFF indicator light goes out.

Malfunction indicator

VSM can be deactivated even if you don't cancel the VSM operation by pressing the ESC OFF button. It indicates that a malfunction has been detected somewhere in Electric Power Steering or VSM system. If the ESC indicator light (🚗) or EPS

warning light remains on, have the system checked by a professional workshop. Kia recommends to visit an authorized Kia dealer/service partner.

⚠ WARNING

- Vehicle Stability Management is not a substitute for safe driving practices but a supplementary function only. It is the responsibility of the driver to always check the speed and the distance to the vehicle ahead. Always hold the steering wheel firmly while driving.
- Your vehicle is designed to activate according to the driver's intention, even with installed VSM. Always follow all the normal precautions for driving at safe speeds for the conditions – including driving inclement weather and on a slippery road.
- Driving with varying tire or wheel sizes may cause VSM to malfunction. When replacing tires, make sure they are the same size as your original tires.

ESS : Emergency Stop Signal (if equipped)

Emergency Stop Signal alerts the driver behind by blinking the stop light when the vehicle suddenly stops or when ABS activates in a stop. (The system activates when the vehicle speed is over 55km/h and the vehicle deceleration is over 7m/s² or ABS activates when the vehicle emergency braking.)

When the vehicle speed is under 40 km/h and ABS deactivates or the sudden stop situation is over, the stop light blinking will stop.

⚠ CAUTION

Emergency Stop Signal will not work if the hazard warning flasher is already on.

Good braking practices

⚠ WARNING

- Whenever leaving vehicle or parking, always set the parking brake as far as possible and fully engage the vehicle's transmission into the park position. Vehicles not fully engaged in park with the parking brake set are at risk for moving inadvertently and injuring yourself or others.
- All vehicles should always have the parking brake fully engaged when parking to avoid inadvertent movement of the car which can injure occupants or pedestrians.

- After parking the vehicle, check to be sure the parking brake is not engaged and that the parking brake indicator light is out before driving away.
- Driving through water may get the brakes wet. They can also get wet when the car is washed. Wet brakes can be dangerous! Your car will not stop as quickly if the brakes are wet. Wet brakes may cause the car to pull to one side. To dry the brakes, apply the brakes lightly until the braking action returns to normal, taking care to keep the car under control at all times. If the braking action does not return to normal, stop as soon as it is safe to do so and have your vehicle inspected by a professional workshop.
  Kia recommends to call an authorized Kia dealer/service partner.
- Don't coast down hills with the car out of gear. This is extremely hazardous. Keep the car in gear at all times, use the brakes to slow down, then shift to a lower gear so that engine braking will help you maintain a safe speed.
- Don't "ride" the brake pedal. Resting your foot on the brake pedal while driving can be dangerous because it can result in the brakes overheating and losing their effectiveness. It also increases the wear of the brake components.
- If a tire goes flat while you are driving, apply the brakes gently and keep the car pointed straight ahead while you slow down. When you are moving slowly enough for it to be safe to do so, pull off the road and stop in a safe place.
- If your car is equipped with an Automatic Transmission/Dual Clutch Transmission, don't let your car creep forward. To avoid creeping forward, keep your foot firmly on the brake pedal when the car is stopped.
- Be cautious when parking on a hill. Firmly engage the parking brake and place the shift lever in P (Park). If your car is facing downhill, turn the front wheels into the

curb to help keep the car from rolling. If your car is facing uphill, turn the front wheels away from the curb to help keep the car from rolling. If there is no curb or if it is required by other conditions to keep the car from rolling, block the wheels.

- Under some conditions your parking brake can freeze in the engaged position. This is most likely to happen when there is an accumulation of snow or ice around or near the rear brakes or if the brakes are wet. If there is a risk that the parking brake may freeze, apply it only temporarily while you put the shift lever in P (Automatic Transmission/Dual Clutch Transmission) or in first or reverse gear (Manual Transmission/Intelligent Manual Transmission) and block the rear wheels so the vehicle cannot roll.Then release the parking brake.
- Do not hold the vehicle on the upgrade with the accelerator pedal. This can cause the transmission to overheat. Always use the brake pedal or parking brake.

Drive mode integrated control (if equipped)

Drive mode

Drive Mode may be selected according to the driver's preference.

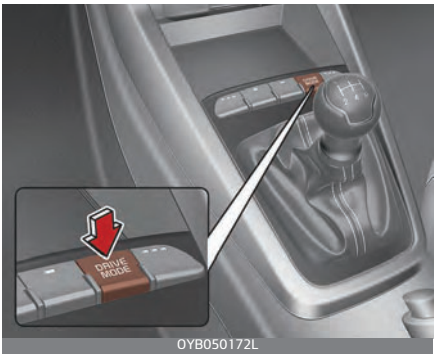

The mode changes whenever DRIVE MODE switch is selected, Drive Mode will change as follows: ECO → NORMAL→ SPORT→ ECO

When the ignition is turned on, Drive Mode is set to ECO by default.

- If it is in Eco mode, Eco mode will be set when the engine is restarted.
- ECO mode: ECO mode improves fuel efficiency for eco-friendly driving.
- SPORT mode: SPORT mode provides sporty but firm riding.

✻ NOTICE

Start Stop Coasting (SSC) is activated when Drive Mode is ECO.

The driving mode will be set to NORMAL or ECO mode when the engine is restarted.

- If it is in NORMAL/SPORT mode, NORMAL mode will be set, when the engine is restarted.
- If it is in Eco mode, Eco mode will be set when the engine is restarted.

When the ignition is turned on, Drive Mode is set to ECO by default.

ECO mode

ECO

When Drive Mode is set to ECO mode, the engine and transmission control logic are changed to maximize fuel efficiency.

- When ECO mode is selected by DRIVE MODE switch, the ECO indicator will illuminate.
- If the vehicle is set to ECO mode, when the engine is turned OFF and restarted the Drive Mode setting will remain in ECO mode.

✻ NOTICE

Start Stop Coasting (SSC) is deactivated When towing a trailer. But Start Stop Coasting (SSC) may be not deactivated when towing a trailer purchased from after market. When towing a trailer purchased from after market, it is recommended to set Drive Mode to NORMAL or SPORT.

When ECO mode is activated:

- The acceleration response may be slightly reduced if the accelerator pedal is engaged moderately.
- The shift pattern of Automatic Transmission may change.

The above situations are normal conditions when ECO mode is activated to improve fuel efficiency.

Limitation of ECO mode operation:

If the following conditions occur while ECO mode is operating, the function operation is limited even though there is no change in the ECO indicator.

- When driving the vehicle with the Automatic Transmission/Dual Clutch Transmission gear shift lever in sport mode, the function will be limited according to the shift location.

✻ NOTICE

Start Stop Coasting (SSC) is activated when Drive Mode is ECO.

SPORT mode

SPORT

SPORT mode manages the driving dynamics by automatically adjusting the steering effort, and the engine and transmission control logic for enhanced driver performance.

- When SPORT mode is selected by DRIVE MODE switch, the SPORT indicator will illuminate.
- Whenever the engine is restarted, Drive Mode will revert back to ECO or NORMAL mode. If SPORT mode is desired, re-select SPORT mode from DRIVE MODE switch.
- When the ignition is turned on, Drive Mode is set to ECO by default.
- When SPORT mode is activated:
  - The engine rpm will tend to remain raised over a certain length of time even after releasing the accelerator.
  - Up shifts are delayed when accelerating.

✻ NOTICE

In SPORT mode, the fuel efficiency may decrease.

Forward Collision-Avoidance Assist (FCA) (Sensor fusion) (if equipped)

FCA is designed to detect and monitor a vehicle ahead or detect a pedestrian or a cyclist in the roadway through front view camera recognition and front radar signals to warn the driver that a collision is imminent, and if necessary, apply emergency braking.

Detecting sensor

Front view camera


OST050066L

Front radar


OST050063L

⚠ WARNING

Forward Collision-Avoidance Assist Limitations

FCA is a supplemental function and is not a substitute for safe driving practices.

It is the responsibility of the driver to always check the speed and distance to the vehicle ahead and to be prepared to apply the brakes.

⚠ WARNING

Take the following precautions when using Forward Collision-Avoidance Assist :

- This function is only a supplemental function and it is not intended to, or does it replace the need for extreme care and attention of the driver. The sensing range and objects detectable by the sensors are limited. Pay attention to the road conditions at all times.
- NEVER drive too fast in accordance with the road conditions or while cornering.
- Always drive cautiously to prevent unexpected and sudden situations from occurring. FCA does not stop the vehicle completely and does not avoid all collisions due to function limitations.

Function settings

Setting functions for the system



OJA050142L

Forward Safety

The driver can activate FCA by placing the ignition switch or ENGINE START/STOP button to the ON position and by selecting on the LCD display 'User Settings → Driver Assistance → Forward Safety'.

- If you select "Active Assist", FCA activates. FCA produces warning messages and warning alarms in accordance with the collision risk levels. Also, it controls the brakes in accordance with the collision risk levels.
- If you select "Warning Only", FCA activates and produces only warning alarms in accordance with the collision risk levels. You should control the brake directly because FCA do not control the brake.
- If you select "Off", FCA deactivates.

The warning light illuminates on the LCD display, when you cancel FCA. The driver can monitor FCA ON/OFF status on the LCD display. Also, the warning light illuminates when the ESC (Electronic Stability Control) is turned off (Traction & Stability control disabled.).

When the warning light remains ON with FCA activated, have the system checked by a professional workshop. Kia recommends to visit an authorized Kia dealer/service partner.

Warning timing



OJA050141L

The driver can select the initial warning activation time in the User Settings in the instrument cluster LCD display.

The options for the initial Forward Collision Warning include the following:

- Normal: When this condition is selected, the initial Forward Collision Warning is activated normally.
- Late: When this condition is selected, the initial Forward Collision Warning is activated later than normal. This setting reduces the amount of distance between the vehicle , pedestrian or cyclist ahead before the initial warning occurs. Select this condition only when traffic is light, and you are driving slowly.

Prerequisite for activation

FCA will activate when FCA is selected on the LCD display, and when the following prerequisites are satisfied:

- ESC (Electronic Stability Control) is activated.
- When FCA recognizes a vehicle or the pedestrian in front.

⚠ WARNING

FCA may not recognize every obstacle or provide warnings and braking in every situation, so do not rely on FCA to stop the vehicle in instances where the driver sees an obstacle and has the ability to apply the brakes.

- FCA automatically activates upon placing the ignition switch or ENGINE START/STOP button to the ON position. The driver can deactivate FCA by canceling the

function setting on the LCD display.
- FCA automatically deactivates upon canceling ESC. When ESC is canceled, FCA cannot be activated on the LCD display.
  FCA warning light will illuminate.

FCA warning message and function control

FCA produces warning messages, warning alarms, and emergency braking based on the level of risk of a frontal collision, such as when a vehicle ahead suddenly brakes, or when the function detects that a collision with a pedestrian is imminent.

The driver can select the initial warning activation time in the User Settings in the LCD display. The options for the initial Forward Collision Warning include Early, Normal or Late initial warning time.

Collision Warning (1st warning)



OST050152L

- The warning message appears on the LCD display with the warning alarms.

Additionally, some vehicle intervention occurs by the engine management function to help decelerate the vehicle.

The vehicle may slow down slightly.
- It will operate if the vehicle speed is greater than 10 km/h (6 mph) and less than or equal to 180km/h (110 mph) on a forward vehicle. (Depending on the condition of the vehicle ahead and the environment surrounding it, the possible maximum operating speed may be reduced.)
- For pedestrians and cyclists, the vehicle speed is greater than or equal to 10 km/h (6 mph) and less than 85 km/h (53 mph). (Depending on the condition of pedestrians and bike riders and the surrounding environment the possible maximum operating speed may be reduced.)
  - If you select "Warning Only", FCA activates and produces only warning alarms in accordance with the collision risk levels. You should control the brake directly because FCA do not control the brake.

Emergency Braking (2nd warning)



OST050153L

- The warning message appears on the LCD display with the warning alarms.

Additionally, some vehicle function intervention occurs by the engine management function to help decelerate the vehicle.

The vehicle may slow down slightly.

- It will operate if the vehicle speed is greater than 10 km/h (6 mph) and less than or equal to 75 km/h (46 mph) on a forward vehicle. (Depending on the condition of the vehicle ahead and the environment surrounding it, the possible maximum operating speed may be reduced.)
- For pedestrians and cyclists, the vehicle speed is greater than or equal to 10 km/h (6 mph) and less than 85 km/h (52 mph). (Depending on the condition of pedestrians and bike riders and the surrounding environment the possible maximum operating speed may be reduced.)
  - If you select "Warning Only", FCA activates and produces only warning alarms in accordance with the collision risk levels. You should control the brake directly because FCA do not control the brake.

Brake operation

In an urgent situation, the braking function enters into the ready status for prompt reaction to assist the driver in depressing the brake pedal.

- FCA provides additional braking power for optimum braking performance when the driver depresses the brake pedal during warning.
- The braking control is automatically deactivated when the driver sharply depresses the accelerator pedal, or when the driver abruptly operates the steering wheel.
- The braking control is automatically canceled when risk factors disappear.

The driver should always exercise caution when operating the vehicle, even though there is no warning message or warning alarm.

⚠ WARNING

FCA cannot avoid all collisions nor completely stop the vehicle before collision. The driver has the responsibility to drive safely and control the vehicle.

⚠ WARNING

FCA is a supplemental function and cannot completely stop the vehicle in all situations or avoid all collisions. It is the responsibility of the driver to safely drive and control the vehicle.

⚠ WARNING

Never deliberately drive dangerously to activate the function as such conduct increases the risk of an accident.

✻ NOTICE

FCA assesses the risk of a collision by monitoring several variables such as the distance to the vehicle/pedestrian ahead, the speed of the vehicle/pedestrian ahead, and the driver's operation of the vehicle. Certain conditions such as inclement weather and road conditions may affect the operation of FCA.

For the function operation, do not attempt risky driving.

✻ NOTICE

- Do not apply foreign objects, such as a bumper sticker or a bumper guard, near the radar sensor. Doing so may adversely affect the sensing performance of the radar.
- Always keep the radar sensor and over clean and free of dirt and debris.
- Use only soft clothes to wash the vehicle. Do not spray pressurized water directly on the sensor or sensor cover.
- Be careful not to apply unnecessary force on the radar sensor or sensor cover. If the sensor is forcibly moved out of proper alignment, FCA may not operate correctly. In this case, a warning message may not be displayed. have the vehicle inspected by a professional workshop. Kia recommends to visit an authorized Kia dealer/service partner.
- If the front bumper becomes damaged in the area around the radar sensor, FCA may not operate properly have the vehicle inspected by a professional workshop. Kia recommends to visit an authorized Kia dealer/service partner.
- Use only genuine parts to repair or replace a damaged sensor or sensor cover. Do not apply paint to the sensor cover.

- Do not tint the window or install stickers or accessories around the inside mirror where the camera is installed.
- Make sure the front view camera installation point does not get wet.
- Do not impact or remove any front view camera/front radar components.
- Do not place reflective objects (white paper or mirror etc.) on the dashboard. The function may activate unnecessarily due to reflection of the sunlight.
- Excessive audio function volume may prevent occupants from hearing FCA warning alarm.

Warning message and warning light

When the sensor is covered or the sensor lens is dirty with foreign substances, such as snow or rain, FCA may not be able to detect vehicles or pedestrians.



OJA050137L

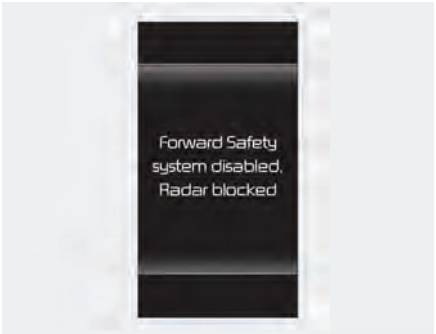

OJA050087L

In this case, a warning message will appear to notify the driver. Remove the foreign substances to allow FCA to function normally.

Remove any dirt, snow, or debris and clean the radar sensor cover before operating FCA.

FCA may not properly operate in an area (e.g. open terrain), where any vehicles or objects are not detected after turning ON the vehicle.

Function malfunction

When FCA is not working properly, FCA warning light ( ) will illuminate and the warning message will appear for a few seconds.



OJA050088L

After the message disappears, the master warning light (⚠) will illuminate. In this case, have the vehicle inspected by a professional workshop. Kia recommends to visit an authorized Kia dealer/service partner

⚠ WARNING

FCA is only a supplemental function for the driver's safety. It is the driver's responsibility to control the vehicle operation. Do not solely depend on FCA. Rather, maintain a safe braking distance, and, if necessary, depress the brake pedal to reduce the driving speed or stop the vehicle.

- In certain instances and under certain driving conditions, FCA may activate unintentionally. This initial warning message appears on the LCD display with a warning chime.

  Also, due to sensing limitations, in certain situations, the front view camera recognition function or front radar may not detect the vehicle, pedestrian or cyclist (if equipped) ahead. FCA may not activate and the warning message will not be displayed.
- FCA may unnecessarily produce the warning message and the warning alarms. Also, due to the sensing limitation, FCA may not produce the warning message and the warning alarm at all.
- When there is a malfunction with FCA, the autonomous emergency braking does not operate upon detecting a collision risk even with other braking functions normally operating.
- FCA operates only for the vehicle/pedestrian in front, while driving forward. It does not operate for any animals or vehicles in the opposite direction.
- FCA may not activate if the driver applies the brake pedal before warning to avoid risk of collision.
- FCA does not operate when the vehicle is in reverse.
- FCA is not designed to detect other objects on the road such as animals.
- FCA does not detect vehicles in the opposite lane.
- FCA does not detect cross traffic vehicles that are approaching.

- FCA cannot detect the driver approaching the side view of a parked vehicle (for example on a dead end street). In these cases, you must maintain a safe braking distance, and if necessary, depress the brake pedal to reduce the driving speed in order to maintain a safe distance.
- FCA may not activate depending on road or driving conditions.
- FCA may not activate to all types of vehicles.

Limitations of the function

FCA is designed to monitor the vehicle ahead in the roadway through front view camera recognition and front radar signals to warn the driver that a collision is imminent, and if necessary, apply emergency braking.

In certain situations, the front view camera or front radar sensor may not be able to detect the vehicle ahead. In these cases, FCA may not operate normally. The driver must pay careful attention in the following situations where FCA operation may be limited.

The sensor may be limited when:

- The function may not operate for 15 seconds after the vehicle is started or the camera is initialized.
- Front view camera and front radar contaminated or blocked.
- The camera lens is contaminated due to tinted, filmed or coated windshield, damaged glass, or stuck of foreign matter (sticker, bug, etc.) on the glass.
- Inclement weather such as heavy rain or snow obscures the field of view of the radar sensor or camera.
- There is interference by electromagnetic waves.
- There is severe irregular reflection from the radar sensor.
- The radar/camera sensor recognition is limited
- The vehicle in front is too small to be detected. (for example a motorcycle etc.)
- The vehicle in front is an oversize vehicle or trailer that is too big to be detected by the camera recognition function. (for example a tractor trailer, etc.)
- The camera's field of view is not well illuminated (either too dark or too much reflection or too much backlight that obscures the field of view).
- The vehicle in front does not have their rear lights or their rear lights does not turned ON or their rear lights are located unusually.
- The outside brightness changes suddenly, for example when entering or exiting a tunnel.

- Light coming from a street light or an oncoming vehicle is reflected on a wet road surface such as a puddle in the road.
- The field of view in front is obstructed by sun glare or head light of oncoming vehicle.
- The windshield glass is fogged up; a clear view of the road is obstructed.
- The vehicle in front is driving erratically.
- The vehicle is on unpaved or uneven rough. surfaces, or road with sudden gradient changes.
- There is severe irregular reflection from the radar sensor.
- The radar/camera sensor recognition is limited
- The vehicle in front is too small to be detected. (for example a motorcycle etc.)
- The vehicle in front is an oversize vehicle or trailer that is too big to be detected by the camera recognition function. (for example a tractor trailer, etc.)
- The camera's field of view is not well illuminated. (either too dark or too much reflection or too much backlight that obscures the field of view)
- The vehicle in front does not have their rear lights or their rear lights does not turned ON or their rear lights are located unusually.
- The outside brightness changes suddenly, for example when entering or exiting a tunnel.
- Light coming from a street light or an oncoming vehicle is reflected on a wet road surface such as a puddle in the road.
- The field of view in front is obstructed by sun glare or head light of oncoming vehicle.
- The windshield glass is fogged up; a clear view of the road is obstructed.
- The vehicle in front is driving erratically.
- The vehicle is on unpaved or uneven rough surfaces, or road with sudden gradient changes.
- The vehicle is driven near areas containing metal substances as a construction zone, railroad, etc.
- The vehicle drives inside a building, such as a basement parking lot.
- The camera does not recognize the entire vehicle in front.
- The camera is damaged.
- The brightness outside is too low such as when the headlamps are not on at night or the vehicle is going through a tunnel.
- The shadow is on the road by a median strip, trees, etc.
- The vehicle drives through a toll-gate.
- The windshield glass is fogged up; a clear view of the road is obstructed.

- The rear part of the vehicle in front is not normally visible. (the vehicle turns in other direction or the vehicle is overturned.)
- The adverse road conditions cause excessive vehicle vibrations while driving.
- The sensor recognition changes suddenly when passing over a speed bump.
- The vehicle in front is moving vertically to the driving direction .
- The vehicle in front is stopped vertically.
- The vehicle in front is driving towards your vehicle or reversing.
- You are on a roundabout and the vehicle in front circles.

Driving on a curve

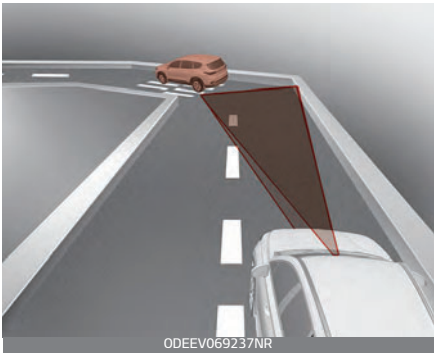
ODEEV069237NR

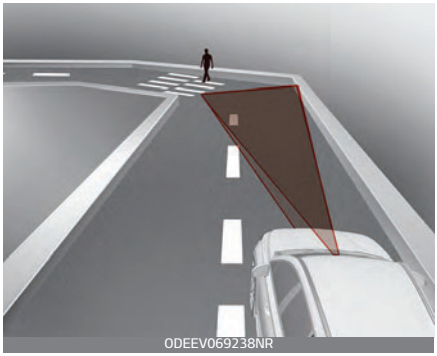
ODEEV069238NR

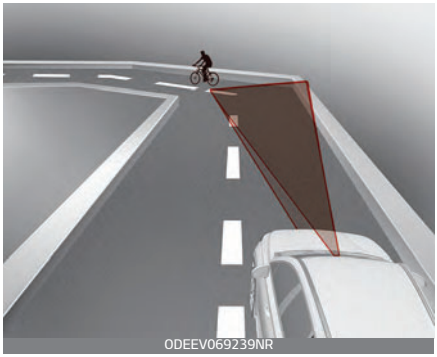
ODEEV069239NR

Forward Collision- Avoidance Assist may be limited when driving on a curved road.

The front view camera or radar sensor recognition function may not detect the vehicle, pedestrian or cyclist traveling in front on a curved road.

This may result in no alarm and braking when necessary.

Always pay attention to road and driving conditions, and if necessary, depress the brake pedal to reduce your driving speed in order to maintain a safe distance.

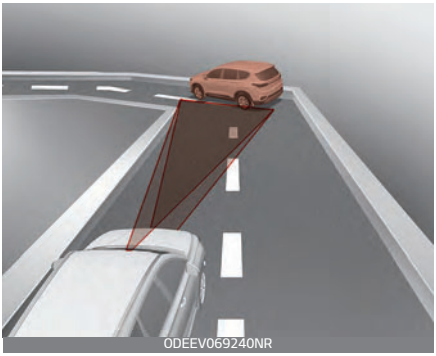
ODEEV069240NR

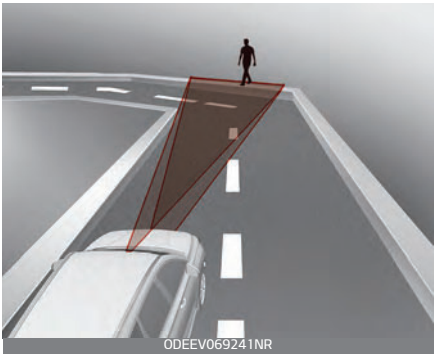
ODEEV069241NR

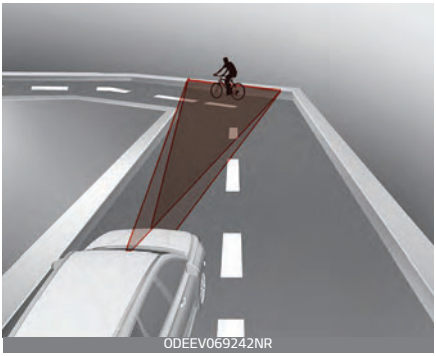
ODEEV069242NR

Forward Collision-Avoidance Assist may recognize a vehicle or pedestrian or cyclist in the next lane or outside the lane when driving on a curved road.

If this occurs, the function may unnecessarily alarm the driver and apply the brake.

Always pay attention to road and driving conditions, while driving.

Driving on a slope


ODEEV069243NR


ODEEV069244NR


ODEEV069245NR

The performance of Forward Collision-Avoidance Assist may be decreased while driving upward or downward on a slope. The front view camera or front radar sensor recognition may not detect the vehicle, pedestrian or cyclist in front.

This may result in unnecessary alarm and braking or no alarm and braking when necessary.

When the function suddenly recognizes the vehicle, pedestrian or cyclist in front while passing over a slope, you may experience sharp deceleration.

Always keep your eyes forward while driving upward or downward on a slope, and, if necessary, depress the brake pedal to reduce your driving speed in order to maintain distance.

Changing lanes



OADAS030SDY

[A]: Your vehicle, [B]: Lane changing vehicle

When a vehicle changes lanes in front of you, FCA may not immediately detect the vehicle, especially if the vehicle changes lanes abruptly. In this case, you must maintain a safe braking distance, and if necessary, depress the brake pedal to reduce your driving speed in order to maintain a safe distance.

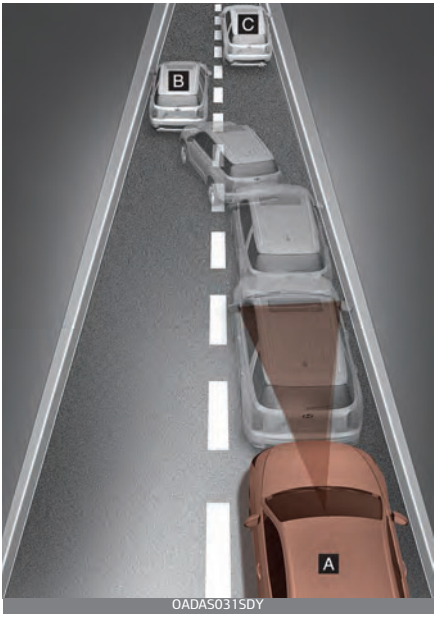

[A]: Your vehicle, [B]: Lane changing vehicle, [C]: Same lane vehicle

When driving in stop-and-go traffic, and a stopped vehicle in front of you merges out of the lane, FCA may not immediately detect the new vehicle that is now in front of you. In this case, you must maintain a safe braking distance, and if necessary, depress the brake pedal to reduce your driving speed in order to maintain a safe distance.

Recognizing the vehicle



When the vehicle in front has heavy loading extended rearward, or when the vehicle in front has higher ground clearance, it may induce a hazardous situation. Always pay attention to road and driving conditions, while driving and, if necessary, depress the brake pedal to reduce your driving speed in order to maintain distance.

Situation in which the function may not detect pedestrian and cyclist properly.

The sensor may be limited when:

- The pedestrian or cyclist is not fully detected by the camera recognition function, for example, if the pedestrian is leaning over or is not fully walking upright.
- The pedestrian or cyclist is moving very quickly or appears abruptly in the camera detection area.

- The pedestrian or cyclist is wearing clothing that easily blends into the background, making it difficult to be detected by the camera recognition function.
- The outside lighting is too bright (e.g. when driving in bright sunlight or in sun glare) or too dark. (e.g. when driving on a dark rural road at night)
- It is difficult to detect and distinguish the pedestrian or cyclist from other objects in the surroundings, for example, when there is a group of pedestrians, cyclists or a large crowd.
- There is an item similar to a person's body structure
- The pedestrian or cyclist is small.
- The pedestrian has impaired mobility.
- The sensor recognition is limited.
- The radar sensor or camera is blocked with a foreign object or debris.
- Inclement weather such as heavy rain or snow obscures the field of view of the radar sensor or camera.
- When light coming from a street light or an oncoming vehicle is reflected on a wet road surface such as a puddle in the road.
- The field of view in front is obstructed by sun glare.
- The windshield glass is fogged up; a clear view of the road is obstructed.
- The adverse road conditions cause excessive vehicle vibrations while driving.
- The sensor recognition changes suddenly when passing over a speed bump.
- You are on a roundabout.
- The pedestrian or cyclist suddenly interrupts in front of the vehicle.
- There is any other electromagnetic interference.
- The cyclist in front is riding intersected with the driving direction.
- The construction area, rail or other metal object is near the cyclist.
- The bicycle material is not reflected well on the radar.

⚠ WARNING

- Cancel FCA in the User Settings on the LCD display, before towing another vehicle. While towing, the brake application may adversely affect your vehicle safety.
- Exercise extreme caution to the vehicle in front, when it has heavy loading extended rearward, or when it has higher ground clearance.
- Never try to test the operation of FCA. Doing so may cause severe injury or death.
- FCA is designed to detect and monitor the vehicle ahead or detect a pedestrian in the roadway through front view camera

recognition and front radar signals. It is not designed to detect bicycles, motorcycles, or smaller wheeled objects such as luggage bags, shopping carts, or strollers.
- When replacing or reinstalling the windshield, front bumper or front view camera recognition and front radar signals after removal, have the vehicle inspected by a professional workshop. Kia recommends to visit an authorized Kia dealer/service partner

✻ NOTICE

In some instances, FCA may be canceled when subjected to electromagnetic interference.

Lane Keeping Assist (LKA) (if equipped)

Lane Keeping Assist detects the lane markers on the road with a front view camera at the front windshield, and assists the driver's steering to help keep the vehicle in the lanes.

When the function detects the vehicle straying from its lane, it warns the driver with a visual and audible warning, while applying a counter-steering torque, trying to prevent the vehicle from moving out of its lane.

5

Detecting sensor

Front view camera



The front view camera is used as a detecting sensor to detect lane markings (or road edges). Refer to the picture above for the detailed location of the detecting sensor.

⚠ WARNING

Lane Keeping Assist is a supplemental function and is not a substitute for safe driving practices. It is the responsibility of the driver to always pay attention and drive safely.

⚠ WARNING

- Driver is responsible for being aware of surroundings and steering the vehicle for safe driving practices.
- Do not steer the steering wheel suddenly when the steering wheel is being assisted by the function.

⚠ WARNING

- When you replace the windshield glass, front view camera or related parts of the steering, take your vehicle to an authorized Kia dealer and have the function checked to need a calibration.
- The function detects lane markers. And controls the steering wheel by a front view camera, therefore, if the lane markers are hard to detect, the function may not work properly. Always be cautious when using the function
- Refer to "Limitations of the function" on page 5-86". If the lane is not detected properly.
- Do not remove or damage the related parts of LKA.
- Do not place objects on the crash pad that reflects light such as mirrors, white paper, etc. it may cause malfunction of LKA if the sunlight is reflected.
- You may not hear warning sound of LKA because of the excessive audio sound.
- While other beeps such as the seat belt warning sound are in operation and override LKA alarming function, LKA beeps may not occur.
- If the vehicle speed is high, steering torque for assistance will not be enough to keep your vehicle within the lane. If so, the vehicle may move out of its lane. Obey speed limit when using LKA.
- If you attach objects to the steering wheel, the function may not assist steering.
- If you attach objects to the steering wheel, hands off alarm may not work properly.

Turning the function ON/OFF

To activate/deactivate LKA :

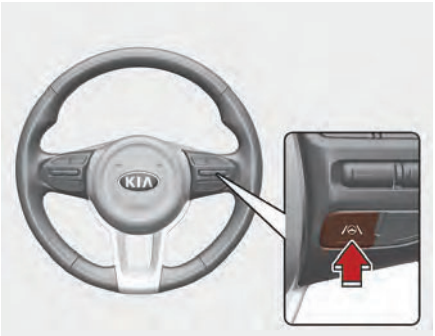

OJA050065

With ignition switch or ENGINE START/STOP button in the ON position, press and hold the Lane Safety button (/) located on the instrument panel to turn on Lane Keeping Assist.

The indicator (/) in the cluster display will initially illuminate white. If you press and hold the Lane Driving Assist button located on the steering wheel, LKA will be turned off and the indicator on the cluster display will go off.

The color of indicator will change depend on the condition of LKA.

- White : Sensor does not detect the lane marker or vehicle speed is less than 60 km/h (37 mph).
- Green : Sensor detects the lane marker and function is able to control the steering.

LKA function change

The driver can change LKA to Lane Departure Warning (LDW) or change LKA mode selecting on the LCD display “User settings → Driver Assistance → Lane Safety → Lane Keeping Assist/Off”

Lane Keeping Assist

LKA mode guides the driver to keep the vehicle within the lanes. It rarely controls the steering wheel, when the vehicle drives well inside the lanes. However, it starts to control the steering wheel, when the vehicle is about to deviate from the lanes.

Lane Departure Warning

LDW warns the driver with a visual and acoustic warning when the function detects the vehicle leaving the lane. In this mode, the steering wheel will not be controlled. When the vehicle’s front wheel contacts the inside edge of lane line, the contacted line will be displayed on the LCD display.

Off

If you select ‘Off’, it is the same with pressing and holding Lane Driving Assist button (/) on the steering wheel.

LKA activation



OST050157L

- To see LKA screen on the LCD display in the cluster, Tab to DRIVER ASSIST mode ( ).
- For further details, refer to "LCD display (for Type B cluster)" on page 4-68.
- After LKA is activated, if both lane markers are detected, vehicle speed is over 60 km/h (37 mph) and all the activation conditions are satisfied, a green steering wheel indicator will illuminate and the steering wheel will be controlled.

⚠ WARNING

Lane Keeping Assist is a function to help prevent the driver from leaving the lane. However, the driver should not solely rely on the function but always check the road conditions when driving.

Lane undetected



OST050156L

Lane detected



OST050157L

If the speed of the vehicle is over 60 km/h (37 mph) and the function detects lane markers, the color changes from gray to white.

Warning

Left lane departure warning



OST050222L

Right lane departure warning



OST050159L

If the vehicle leaves a lane, the lane marker you cross will blink on the LCD display and the warning sound is provided.

- Vehicle speed is above 60 km/h (37 mph).
- Both lane markers are detected by LKA.
- The vehicle is between the lane markers.

If LKA can assist steering, a green steering wheel indicator will illuminate.

If the vehicle moves out its lane because steering torque for assistance is not enough, the line indicator of deviation direction will blink and the warning sound is provided.

Hands-off warning

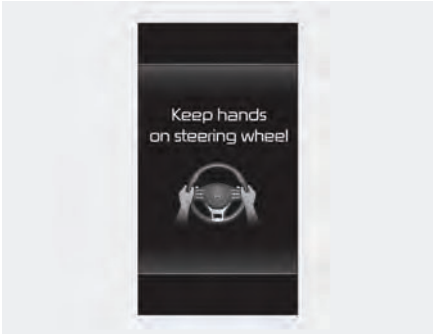

OJA050128L

If the driver takes hands off the steering wheel for several seconds while LKA is activated, the function will warn the driver.

⚠ WARNING

- The steering wheel may not be assisted if the steering wheel is held very tight or the steering wheel is steered over a certain level.
- Lane Keeping Assist does not operate at all times. It is the responsibility of the driver to safely steer the vehicle and to maintain the vehicle in its lane.
- The hands-off warning message may appear late depending on road conditions. Always have your

hands on the steering wheel while driving.
- If the steering wheel is held very lightly, the hands-off warning message may appear because the function may not recognize that the driver has their hands on the steering wheel.
- If you attach objects to the steering wheel, the hands-off warning may not work properly.

Function malfunction



OJA050089L

When Lane Keeping Assist is not working properly, the 'Check Lane Keeping Assist (LKA) system' warning message will appear and the yellow (/\) indicator light will illuminate on the cluster. If this occurs, have the system checked by a professional workshop. Kia recommends to visit an authorized Kia dealer/service partner.

Limitations of the function

Lane Keeping Assist may not operate normally or may operate unexpectedly under the following circumstances:
- The lane is contaminated or difficult to distinguish because,
- The lane is covered with rain, snow, dirt, oil, etc.
- The color of the lane marking (or road edge) is not distinguishable from the road
- There are markings on the road near the lane or the markings on the road looks similar to the lane markings
- The lane marking is indistinct or damaged
- The shadow is on the lane marking by a median strip, trees, guardrail, noise barriers, etc.
- There are more than two lane markings on the road, such as a construction area
- The lane markings are complicated or a structure substitutes for the lines, such as a construction area
- The lane number increases or decreases, or the lane markings are crossing complicatedly
- There is a road markings such as zigzag lines, crossroads, or road signs
- The lane suddenly disappears, such as at the intersection

- The lane (or road width) is very wide or narrow
- There is a curb without a lane
- There is a boundary structure in the roadway, such as a tollgate, sidewalk, curb, etc.
- You are driving in the bus lane or the left/right lane of the bus lane
- The distance to the front vehicle is extremely short or the vehicle in front is covering the lane marking (or road edge)

⚠ CAUTION

For more details on the limitations of the front view camera, refer to "Forward Collision-Avoidance Assist (FCA) (Sensor fusion) (if equipped)" on page 5-66.

⚠ WARNING

- The driver should hold the responsibility to safely drive and control the vehicle. Do not solely rely on the function and drive dangerously.
- The operation of Lane Keeping Assist can be canceled or not work properly if the lane (including road edges) is not detected properly, depending on road conditions and surroundings. Always be cautious while driving.
- Refer to "Limitations of the function" on page 5-86. If the lane is not detected properly.
- When you are towing a trailer or another vehicle, we recommend that Lane Keeping Assist is turned off due to safety reasons.
- If the vehicle is driven at high speed, the steering wheel will not be controlled. The driver must always follow the speed limit when using the function.
- If any other function's warning message is displayed or audible warning is generated, Lane Keeping Assist warning message may not be displayed and audible warning may not be generated.
- You may not hear the warning sound of Lane Keeping Assist if the surrounding is noisy.
- If you attach objects to the steering wheel, steering may not be assisted properly.
- Lane Keeping Assist may not operate for 15 seconds after the vehicle is started, or the front view camera is initialized.
- Lane Keeping Assist will not operate when:
  - The turn signal or hazard warning flasher is turned on
  - The vehicle is not driven in the center of the lane when the function is turned on or right after changing a lane
  - ESC (Electronic Stability Control) or VSM (Vehicle Stability Management) is activated
  - The vehicle is driven on a sharp curve

- Vehicle speed is below 55 km/h (34 mph) or above 210 km/h (130 mph)
- The vehicle makes sharp lane changes
- The vehicle suddenly brakes

Blind-Spot Collision Warning (BCW) (if equipped)

Blind-Spot Collision Warning is designed to help detect and monitor approaching vehicles in the driver's blind spot area and warn the driver of a possible collision with a warning message and audible warning.

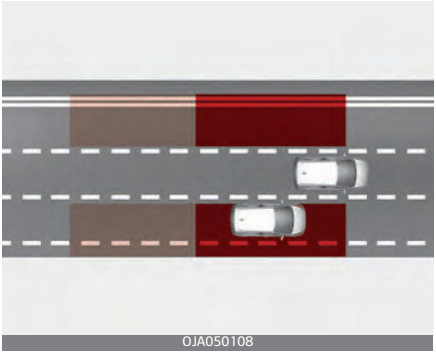

Blind-Spot Collision Warning help detects and informs the driver that a vehicle is in the blind spot.

⚠ CAUTION

The detecting range may vary depending on the speed of your vehicle. However, even if there is a vehicle in the blind spot, the function may not warn you when you pass by at high speed.

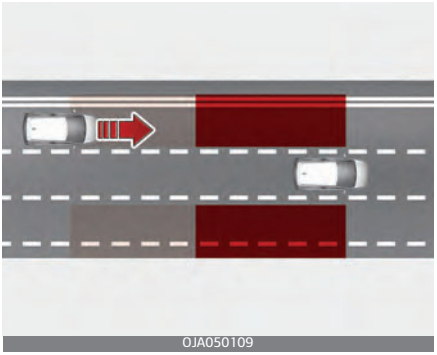
OJA050109

Blind-Spot Collision Warning help detects and informs the driver that a vehicle is approaching at high speed from the blind spot area.

⚠ CAUTION

Warning timing may vary depending on the speed of the vehicle approaching at high speed.

✻ NOTICE

In the following text, Blind-Spot Collision Warning will be referred as Blind- Spot Safety system.

Detecting sensor

Rear corner radar


OST050218L

Refer to the picture above for the detailed location of the detecting sensor.

⚠ CAUTION

Take the following precautions to maintain optimal performance of the detecting sensor:

- Never disassemble the rear corner radar or radar assembly, or apply any impact on it.
- If the rear corner radar have been replaced or repaired. In this case, have your vehicle inspected by a professional workshop. Kia recommends to contact an authorized Kia dealer/service partner .
- If there is impact on the rear corner radar or near the radar, even though the warning message does not appear on the cluster, Blind-Spot Safety system may not operate properly. In this case, have your vehicle inspected by a

professional workshop. Kia recommends to contact an authorized Kia dealer/service partner.
- Use only genuine parts to repair the rear bumper where the rear corner radar is located.
- Do not apply license plate frame or object, such as a bumper sticker, film or a bumper guard near the rear corner radar.
- The function may not work properly if the bumper has been replaced, or the surroundings of the rear corner radar has been damaged or paint has been applied.
- If a trailer, carrier, etc. is installed, it may adversely affect the performance of the rear corner radar or the function may not operate.

⚠ CAUTION

For more details on the precautions of the front view camera, refer to "Forward Collision-Avoidance Assist (FCA) (Sensor fusion) (if equipped)" on page 5-66.

Function settings

Setting functions for the system

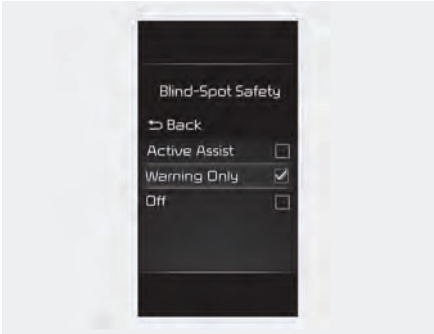

OST050221L

Blind-Spot Safety

With the ignition switch or ENGINE START/STOP button in the ON position, select or deselect 'Driver Assistance → Blind-Spot Safety' from the User Settings menu to set whether or not to use each function.

If 'Warning Only' is selected, the function will warn the driver with a warning message, an audible warning depending on the collision risk levels.

If 'Off' is selected, the function will turn off.



OJA050083L

When the engine is restarted with the function off, the 'Blind-Spot Safety System is Off' message will appear on the cluster.

If you change the setting from 'Off' to 'Warning Only', the warning light on the outside rearview mirror will blink for three seconds.

In addition, if the engine is turned on, when the function is set to 'Warning Only', the warning light on the outside rearview mirror will blink for three seconds.

⚠ WARNING

If 'Off' is selected, the driver should always be aware of the surroundings and drive safely.

✻ NOTICE

If the engine is restarted, Blind-Spot Safety system will maintain the last setting.

Warning Timing

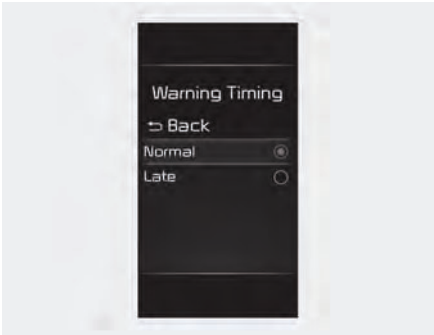

OJA050141L

With the ignition switch or ENGINE START/STOP button in the ON position, select 'Driver Assistance → Warning Timing' from the Settings menu to change the initial warning activation time for Blind-Spot Safety system.

When the vehicle is first delivered, Warning Timing is set to 'Normal. If you change the Warning Timing, the warning time of other Driver Assistance systems may change.

⚠ CAUTION

- The setting of the Warning Timing applies to all functions of the Blind-Spot Safety system.
- Even though 'Normal' is selected for Warning Timing, if the vehicles approaches at high speed, the initial warning activation time may seem late.

- Select 'Late' for Warning Timing when traffic is light and when driving speed is slow.

Function operation

Function warning

Vehicle detection



- To warn the driver a vehicle is detected, the warning light on the outside rearview mirror and will illuminate
- The function will operate when your vehicle speed is above 20 km/h (12 mph) and the speed of the vehicle in the blind spot area is above 10 km/h (7 mph).

Collision warning

- Collision warning will operate when the turn signal is turned on in the direction of the detected vehicle.
- If 'Warning Only' is selected from the Settings menu, the collision warning will operate when your vehicle approaches the lane the blind spot vehicle is detected.
- To warn the driver of a collision, the warning light on the outside rearview mirror will blink.
- When the turn signal is turned off or you move away from the lane, the collision warning will be canceled and the function will return to vehicle detection state.

⚠ WARNING

- The detecting range of the rear corner radar is determined by the standard road width, therefore, on a narrow road, the function may detect other vehicles in the next lane and warn you. In contrast, on a wide road, the function may not be able to detect a vehicle driving in the next lane and may not warn you.
- When the hazard warning light is on, the collision warning by the turn signal will not operate.

Take the following precautions when using Blind-Spot Safety system:

- For your safety, change the Settings after parking the vehicle at a safe location.
- If any other function's warning message is displayed or audible warning is generated, Blind-Spot Safety system's warning message may not be displayed and

audible warning may not be generated.
- You may not hear the warning sound of Blind-Spot Safety system if the surrounding is noisy.
- Blind-Spot Safety system may warn the driver late or may not warn the driver depending on the road and driving conditions.
- Driver should maintain control of the vehicle at all times. Do not depend on Blind-Spot Safety system. Maintain a safe braking distance, and if necessary, depress the brake pedal to reduce driving speed or to stop the vehicle.

✻ NOTICE

If the driver's seat is on the left side, the collision warning may occur when you turn left. Maintain a proper distance with the vehicles in the left lane. If the driver's seat is on the right side, the collision warning may occur when you turn right. Maintain a proper distance with the vehicles in the right lane.

Function malfunction and limitations

Function malfunction



OJA050085L

When Blind-Spot Safety system is not working properly, the 'Check Blind-Spot Safety system' warning message will appear on the cluster, and the function will turn off automatically, or the function will be limited. In this case, have your vehicle inspected by a professional workshop. Kia recommends to contact an authorized Kia dealer/service partner.

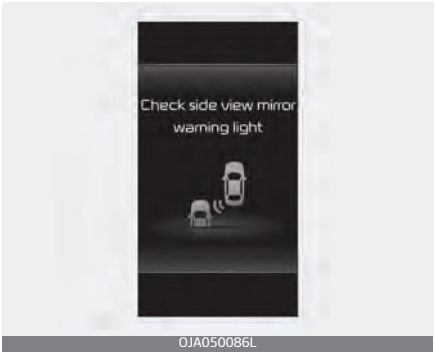

OJA050086L

When the outside rearview mirror warning light is not working properly, the 'Check side view mirror warning light' warning message will appear on the cluster. We recommend that you have your vehicle inspected by an authorized Kia dealer/service partner.

Function disabled

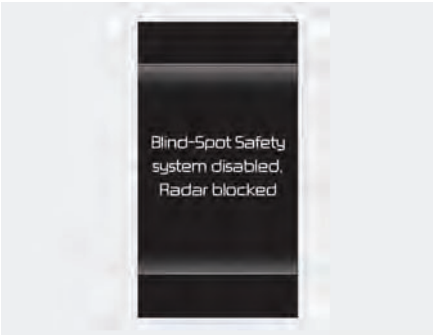

OJA050084L

When the rear bumper around the rear corner radar or sensor is covered with foreign material, such as snow or rain, or installing a trailer or carrier, it can reduce the detecting performance and temporarily limit or disable Blind-Spot Safety system.

If this occurs, the 'Blind-Spot Safety system disabled. Radar blocked' warning message will appear on the cluster.

The function will operate normally when such foreign material or trailer, etc. is removed, and then the engine is restarted.

If the function does not operate normally after it is removed, have the vehicle inspected by a professional workshop. Kia recommends to visit an authorized Kia dealer/service partner.

⚠ WARNING

Even though the warning message does not appear on the cluster, Blind-Spot Safety system may not properly operate.

Blind-Spot Safety system may not properly operate in an area (e.g. open terrain), where any substance are not detected right after the engine is turned on, or when the detecting sensor is blocked with foreign material right after the engine is turned on.

⚠ CAUTION

Turn off Blind-Spot Safety system to install a trailer, carrier, etc., or remove the trailer, carrier, etc. to use Blind-Spot Safety system.

Limitations of the function

Blind-Spot Safety system may not operate normally, or the function may operate unexpectedly under the following circumstances:

- There is inclement weather, such as heavy snow, heavy rain, etc.

- The rear corner radar is covered with snow, rain, dirt, etc.
- The temperature around the rear corner radar is high or low
- Driving on a highway (or motorway) ramp
- The road pavement (or the peripheral ground) abnormally contains metallic components (i.e. possibly due to subway construction).
- There is a fixed object near the vehicle, such as sound barriers, guardrails, central dividers, entry barriers, street lamps, signs, tunnels, walls, etc. (including double structures)
- Driving in large areas where there are few vehicles or structures (i.e. desert, meadow, suburb, etc.)
- Driving through a narrow road where trees or grass are overgrown
- Driving on a wet road surface, such as a puddle on the road
- The other vehicle drives very close behind your vehicle, or the other vehicle passes by your vehicle in close proximity
- The speed of the other vehicle is very fast that it passes by your vehicle in a short time
- Your vehicle passes by the other vehicle
- Your vehicle change lane
- Your vehicle has started at the same time as the vehicle next to you and has accelerated
- The vehicle in the next lane moves two lanes away from you, or when the vehicle two lanes away moves to the next lane from you
- A trailer or carrier is installed around the rear corner radar
- The bumper around the rear corner radar is covered with objects, such as a bumper sticker, bumper guard, bike rack, etc.
- The bumper around the rear corner radar is impacted, damaged or the radar is out of position
- Your vehicle height is low or high due to heavy loads, abnormal tire pressure, etc.

Blind-Spot Safety system may not operate normally, or the function may operate unexpectedly when the following objects are detected:

- A motorcycle or bicycle is detected
- A vehicle such as a flat trailer is detected
- A big vehicle such as a bus or truck is detected
- A moving obstacle such as a pedestrian, animal, shopping cart or a baby stroller is detected
- A vehicle with low height such as a sports car is detected

⚠ WARNING

Driving on a curve

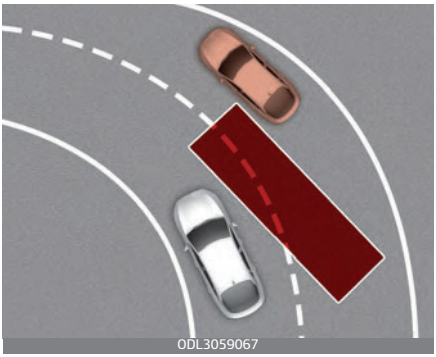

Blind-Spot Safety system may not operate properly when driving on a curved road. The function may not detect the vehicle in the next lane.

Always pay attention to road and driving conditions while driving.

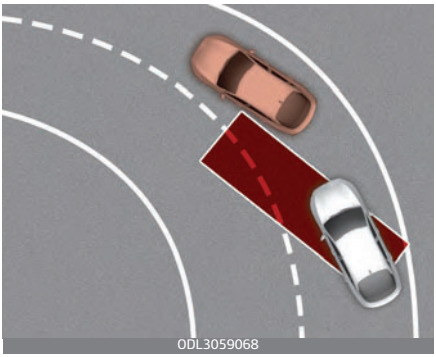

Blind-Spot Safety system may not operate properly when driving on the curved road. The function may recognize the vehicle in the same lane.

Always pay attention to road and driving conditions while driving.

Driving where the road is merging/ dividing

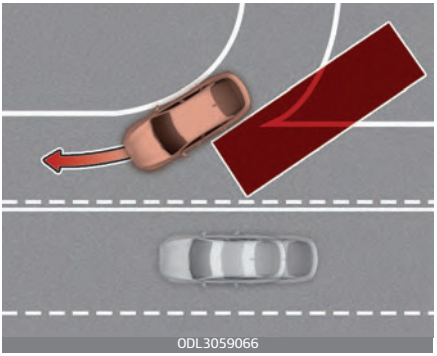

Blind-Spot Safety system may not operate properly when driving where the road merges or divides. The function may not detect the vehicle in the next lane.

Always pay attention to road and driving conditions while driving.

Driving on a slope

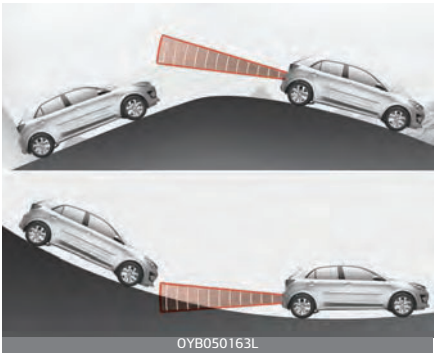

Blind-Spot Safety system may not operate properly when driving on a slope. The function may not detect the vehicle in the next lane or may

incorrectly detect the ground or structure.

Always pay attention to road and driving conditions while driving.

Driving where the heights of the lanes are different

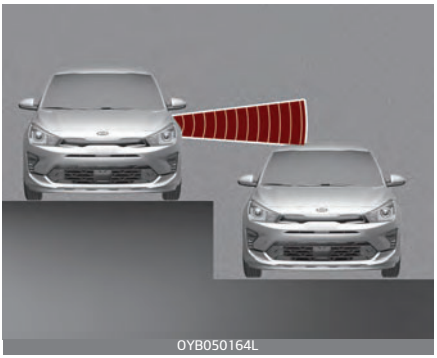

Blind-Spot Safety system may not operate properly when driving where the heights of the lanes are different. The function may not detect the vehicle on a road with different lane heights (underpass joining section, grade separated intersections, etc.).

Always pay attention to road and driving conditions while driving.

⚠ WARNING

Blind-Spot Safety system may not operate normally if interfered by strong electromagnetic waves.

Blind-Spot Safety system may not operate for 3 seconds after the vehicle is started, or the rear corner radars are initialized.

⚠ WARNING

- When you are towing a trailer or another vehicle, make sure that you turn off Blind-Spot Safety system.
- Blind-Spot Safety system may not operate normally if interfered by strong electromagnetic waves.
- Blind-Spot Safety system may not operate for 15 seconds after the vehicle is started, or the rear corner radars are initialized.

Blind-Spot Collision-Avoidance Assist (BCA) (if equipped)

Blind-Spot Collision-Avoidance Assist is designed to help detect and monitor approaching vehicles in the driver's blind spot area and warn the driver of a possible collision with a warning message and audible warning.

In addition, if there is a risk of collision when changing lanes or driving forward out of a parking space, the function will help avoid collision by applying the Differential braking.

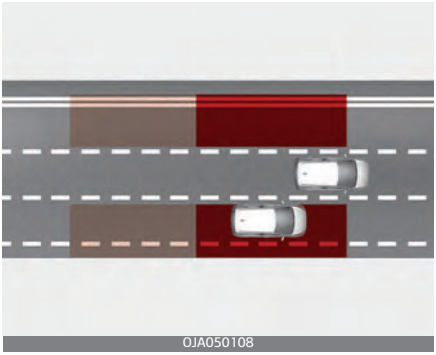
OJA050108

Blind-Spot Collision-Avoidance Assist help detects and informs the driver that a vehicle is in the blind spot.

⚠ CAUTION

The detecting range may vary depending on the speed of your vehicle. However, even if there is a vehicle in the blind spot, the function may not warn you when you pass by at high speeds.

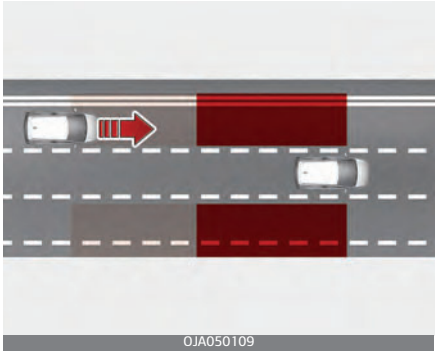
OJA050109

Blind-Spot Collision-Avoidance Assist help detects and informs the driver that a vehicle is approaching at high speed from the blind spot area.

⚠ CAUTION

Warning timing may vary depending on the speed of the vehicle approaching at high speed.

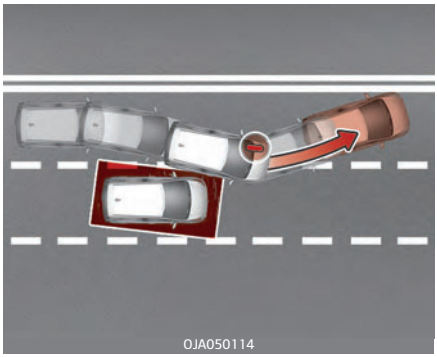
OJA050114

When changing lanes by detecting the lane ahead, if the function

judges that there is a collision risk with an approaching vehicle in the blind spot, the function will help avoid collision by applying the differential brake.

NOTICE

In the following text, Blind-Spot Collision-Avoidance Assist will be referred as Blind- Spot Safety system.

Detecting sensor





[1] : Front view camera, [2] : Rear corner radar

Refer to the picture above for the detailed location of the detecting sensors.

CAUTION

Take the following precautions to maintain optimal performance of the detecting sensor:

- Never disassemble the rear corner radar or radar assembly, or apply any impact on it.
- If there is impact on the rear corner radar or near the radar, even though the warning message does not appear on the cluster, Blind-Spot Safety system may not operate properly. We recommend that you have your vehicle inspected by an authorized Kia dealer/service partner.
- If the rear corner radars have been replaced or repaired, we recommend that you have your vehicle inspected by an authorized Kia dealer/service partner.
- Use only genuine parts to repair the rear bumper where the rear corner radar is located.
- Do not apply license plate frame or objects, such as a bumper sticker, film or a bumper guard near the rear corner radar.
- The function may not work properly if the bumper has been replaced, or the surroundings of the rear corner radar has been damaged or paint has been

applied. If a trailer, carrier, etc. is installed, it may adversely affect the performance of the rear corner radar or the function may not operate.

⚠ CAUTION

For more details on the precautions of the front view camera, refer to "Forward Collision-Avoidance Assist (FCA) (Sensor fusion) (if equipped)" on page 5-66.

Function settings

Setting functions for the system

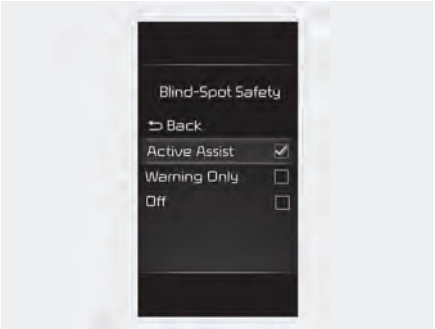

OJA050144L

Blind-Spot Safety

With the ignition switch or ENGINE START/STOP button in the ON position, select or deselect 'Driver Assistance → Blind-Spot Safety' from the User Settings menu to set whether or not to use each function.

- If 'Active Assist' is selected, the function will warn the driver with a warning message, an audible warning and braking assist will be applied depending on the collision risk levels.
- If 'Warning Only' is selected, the function will warn the driver with a warning message, an audible warning depending on the collision risk levels. Braking will not be assisted.
- If 'Off' is selected, the function will turn off.



OJA050083L

When the engine is restarted with the function off, the 'Blind-Spot Safety System is Off' message will appear on the cluster.

If you change the setting from 'Off' to 'Active Assist' or 'Warning Only', the warning light on the outside rearview mirror will blink for three seconds.

In addition, if the engine is turned on, when the function is set to 'Active Assist' or 'Warning Only', the

warning light on the outside rear-view mirror will blink for three seconds.

⚠ WARNING

- If 'Warning Only' is selected, braking is not assisted.
- If 'Off' is selected, the driver should always be aware of the surroundings and drive safely.

✻ NOTICE

If the engine is restarted, Blind-Spot Safety system will maintain the last setting.

Warning Timing

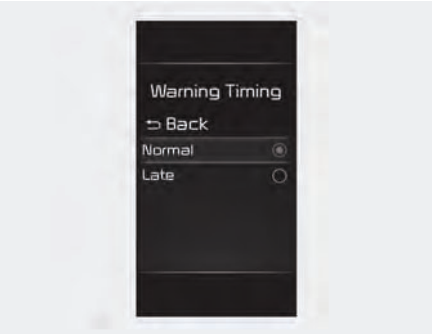

OJA050141L

With the ignition switch or ENGINE START/STOP button in the ON position, select 'Driver Assistance → Warning Timing' from the Settings menu to change the initial warning activation time for Blind-Spot Safety system.

When the vehicle is first delivered, Warning Timing is set to 'Normal. If you change the Warning Timing, the warning time of other Driver Assistance systems may change.

⚠ CAUTION

- The setting of the Warning Timing applies to all functions of the Blind-Spot Safety system.
- Even though 'Normal' is selected for Warning Timing, if the vehicles approaches at high speed, the initial warning activation time may seem late.
- Select 'Late' for Warning Timing when traffic is light and when driving speed is slow.

Function operation

Function warning

Vehicle detection


OYB050160L

- To warn the driver a vehicle is detected, the warning light on the

outside rearview mirror will illuminate.
- The function will operate when your vehicle speed is above 20 km/h (12 mph) and the speed of the vehicle in the blind spot area is above 10 km/h (7 mph).

Collision warning

- Collision warning will operate when the turn signal is turned on in the direction of the detected vehicle.
- If 'Warning Only' is selected from the Settings menu, the collision warning will operate when your vehicle approaches the lane the blind spot vehicle is detected.
- When the turn signal is turned off or you move away from the lane, the collision warning will be canceled and the function will return to vehicle detection state.

⚠ WARNING

- The detecting range of the rear corner radar is determined by a standard road width, therefore, on a narrow road, the function may detect other vehicles in the next lane and warn you. In contrast, on a wide road, the function may not be able to detect a vehicle driving in the next lane and may not warn you.
- When the hazard warning light is on, the collision warning by the turn signal will not operate.

✻ NOTICE

If the driver's seat is on the left side, the collision warning may occur when you turn left. Maintain a proper distance with the vehicles in the left lane. If the driver's seat is on the right side, the collision warning may occur when you turn right. Maintain a proper distance with the vehicles in the right lane.

Collision-Avoidance Assist (while driving)



- To warn the driver of a collision, the warning light on the outside rearview mirror will blink and a warning message will appear on the cluster.
- The function will operate when your vehicle speed is between 60~200 km/h (40~120 mph) and

both lane markings of the driving lane are detected.
- Emergency braking will be assisted to help prevent collision with the vehicle in the blind spot area.

⚠ WARNING

- Collision-Avoidance Assist will be canceled under the following circumstances:
  - Your vehicle enters the next lane by a certain distance
  - Your vehicle is away from the collision risk
  - The steering wheel is sharply steered
  - The brake pedal is depressed
  - Forward Collision-Avoidance Assist is operating
- After function operation or changing lane, you must drive to the center of the lane. The function will not operate if the vehicle is not driven in the center of the lane.

⚠ WARNING

Take the following precautions when using Blind-Spot Safety system:

- For your safety, change the Settings after parking the vehicle at a safe location.
- If any other function's warning message is displayed or audible warning is generated, Blind-Spot Safety warning message may not be displayed and audible warning may not be displayed and audible warning may not be generated.
- You may not hear the warning sound of Blind-Spot Safety system if the surrounding is noisy.
- Blind-Spot Safety system may not operate if the driver applies the brake pedal to avoid collision.
- When Blind-Spot Safety system is operating, braking control by the function will automatically cancel when the driver excessively depresses the accelerator pedal or sharply steers the vehicle.
- During Blind-Spot Safety system operation, the vehicle may stop suddenly injuring passengers and shifting loose objects. Always have the seat belt on and keep loose objects secured.
- Even if there is a problem with Blind-Spot Safety system, the vehicle's basic braking performance will operate normally.
- Blind-Spot Safety system does not operate in all situations or cannot avoid all collisions.
- Blind-Spot Safety system may warn the driver late or may not warn the driver depending on the road and driving conditions.
- Driver should maintain control of the vehicle at all times. Do not depend on Blind-Spot Safety system. Maintain a safe braking dis-

tance, and if necessary, depress the brake pedal to reduce driving speed or to stop the vehicle.
- Never operate Blind-Spot Safety system on people, animal, objects, etc. It may cause serious injury or death.

⚠ WARNING

The brake control may not operate properly depending on the status of ESC (Electronic Stability Control).

There will only be a warning when:
- ESC (Electronic Stability Control) warning light is on.
- ESC (Electronic Stability Control) is engaged in a different function.

Function malfunction and limitations

Function malfunction

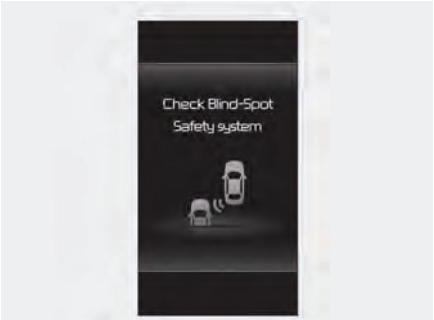

OJA050085L

When Blind-Spot Safety system is not working properly, the 'Check Blind-Spot Safety system' warning message will appear on the cluster, and the function will turn off automatically, or the function will be limited. In this case, have your vehicle inspected by a professional workshop. Kia recommends to contact an authorized Kia dealer/service partner.

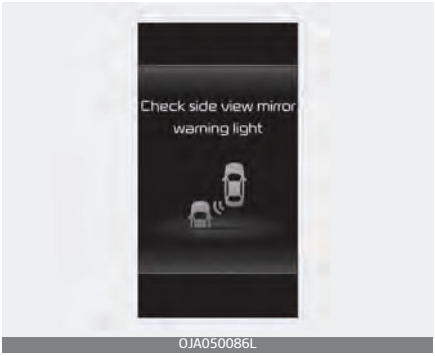

OJA050086L

When the outside rearview mirror warning light is not working properly, the 'Check side view mirror warning light' warning message will appear on the cluster. We recommend that you have your vehicle inspected by an authorized Kia dealer/service partner.

Function disabled

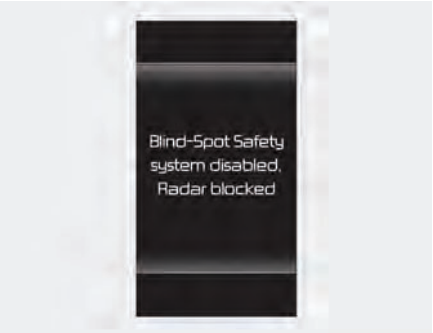

0JA050084L

When the rear bumper around the rear corner radar or sensor is covered with foreign material, such as snow or rain, or installing a trailer or carrier, it can reduce the detecting performance and temporarily limit or disable Blind-Spot Safety system.

If this occurs, the 'Blind-Spot Safety system disabled. Radar blocked' warning message will appear on the cluster.

The function will operate normally when such foreign material or trailer, etc. is removed, and then the engine is restarted.

If the function does not operate normally after it is removed, have the vehicle inspected by a professional workshop. Kia recommends to visit an authorized Kia dealer/service partner.

⚠ WARNING

Even though the warning message does not appear on the cluster, Blind- Spot Safety system may not properly operate.

Blind-Spot Safety system may not properly operate in an area (e.g. open terrain), where any substance are not detected right after the engine is turned on, or when the detecting sensor is blocked with foreign material right after the engine is turned on.

⚠ CAUTION

Turn off Blind-Spot Safety system to install a trailer, carrier, etc., or remove the trailer, carrier, etc. to use Blind-Spot Safety system.

Limitations of the function

Blind-Spot Safety system may not operate normally, or the function may operate unexpectedly under the following circumstances:

- There is inclement weather, such as heavy snow, heavy rain, etc.
- The rear corner radar is covered with snow, rain, dirt, etc.
- The temperature around the rear corner radar is high or low
- Driving on a highway (or motorway) ramp
- The road pavement (or the peripheral ground) abnormally

contains metallic components (i.e. possibly due to subway construction).
- There is a fixed object near the vehicle, such as sound barriers, guardrails, central dividers, entry barriers, street lamps, signs, tunnels, walls, etc. (including double structures)
- Driving in large areas where there are few vehicles or structures (i.e. desert, meadow, suburb, etc.)
- Driving through a narrow road where trees or grass are overgrown
- Driving on a wet road surface, such as a puddle on the road
- The other vehicle drives very close behind your vehicle, or the other vehicle passes by your vehicle in close proximity
- The speed of the other vehicle is very fast that it passes by your vehicle in a short time
- Your vehicle passes by the other vehicle
- Your vehicle change lane
- Your vehicle has started at the same time as the vehicle next to you and has accelerated
- The vehicle in the next lane moves two lanes away from you, or when the vehicle two lanes away moves to the next lane from you
- A trailer or carrier is installed around the rear corner radar
- The bumper around the rear corner radar is covered with objects, such as a bumper sticker, bumper guard, bike rack, etc.
- • The bumper around the rear corner radar is impacted, damaged or the radar is out of position
- Your vehicle height is low or high due to heavy loads, abnormal tire pressure, etc.

Blind-Spot Safety system may not operate normally, or the function may operate unexpectedly when the following objects are detected:
- A motorcycle or bicycle is detected
- A vehicle such as a flat trailer is detected
- A big vehicle such as a bus or truck is detected
- A moving obstacle such as a pedestrian, animal, shopping cart or a baby stroller is detected
- A vehicle with low height such as a sports car is detected

Differential braking control may not work, driver's attention is required in the following circumstances:
- The vehicle severely vibrates while driving over a bumpy road, uneven road or concrete patch
- Driving on a slippery surface due to snow, water puddle, ice, etc.
- The tire pressure is low or a tire is damaged
- The brake is reworked
- The vehicle makes abrupt lane changes

⚠ CAUTION

For more details on the limitations of the front view camera, refer to "Forward Collision-Avoidance Assist (FCA) (Sensor fusion) (if equipped)" on page 5-66.

⚠ WARNING

Driving on a curve

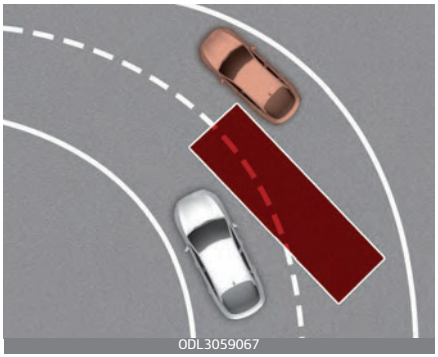

Blind-Spot Safety system may not operate properly when driving on a curved road. The function may not detect the vehicle in the next lane.

Always pay attention to road and driving conditions while driving.

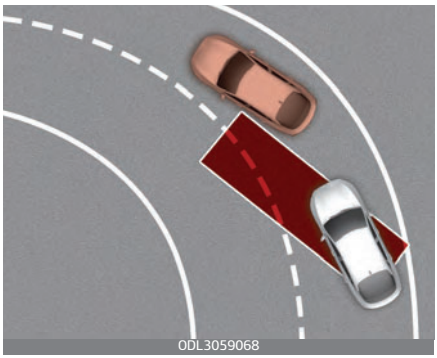

Blind-Spot Safety system may not operate properly when driving on the curved road. The function may recognize the vehicle in the same lane.

Always pay attention to road and driving conditions while driving.

Driving where the road is merging/ dividing

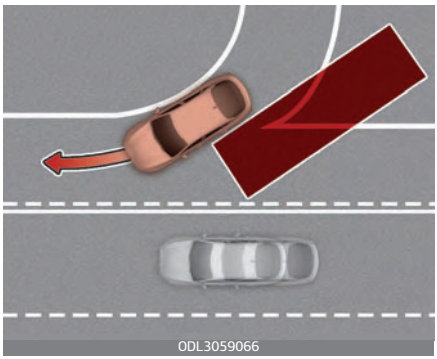

Blind-Spot Safety system may not operate properly when driving where the road merges or divides. The function may not detect the vehicle in the next lane.

Always pay attention to road and driving conditions while driving.

Driving on a slope

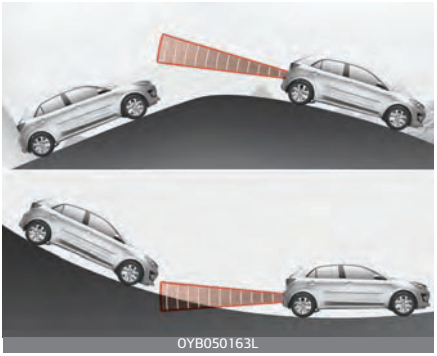
OYB050163L

Blind-Spot Safety system may not operate properly when driving on a slope. The function may not detect the vehicle in the next lane or may incorrectly detect the ground or structure.

Always pay attention to road and driving conditions while driving.

Driving where the heights of the lanes are different

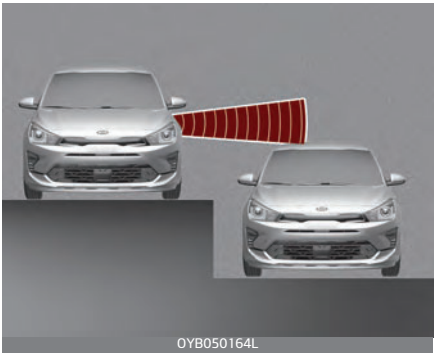
OYB050164L

Blind-Spot Safety system may not operate properly when driving where the heights of the lanes are different. The function may not detect the vehicle on a road with different lane heights (underpass joining section, grade separated intersections, etc.).

Always pay attention to road and driving conditions while driving.

⚠ WARNING

- When you are towing a trailer or another vehicle, make sure that you turn off Blind-Spot Safety system.
- Blind-Spot Safety system may not operate normally if interfered by strong electromagnetic waves.
- Blind-Spot Safety system may not operate for 15 seconds after

the vehicle is started, or the rear corner radars are initialized.

Manual Speed Limit Assist (MSLA) (if equipped)



OYB050202L

1. Speed Limit indicator
2. Set speed

You can set the speed limit when you do not want to drive over a specific speed.

If you drive over the preset speed limit, the warning function operates (set speed limit will blink and chime will sound) until the vehicle speed returns within the speed limit.

✻ NOTICE

While speed limit control is in operation, cruise control cannot be activated.

Function operation

To set speed limit

1. Press the Driving Assist MODE button twice on the steering wheel, to turn the function on.

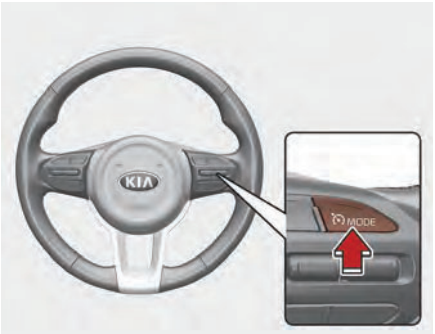

OYB050019L

The speed limit indicator light will illuminate.

2. Move the switch down (to SET-).



OJA050061

3. Move the switch up (to RES+) or down (to SET-), and release it at the desired speed. Move the switch up (to RES+) or down (to SET-) and hold it.The speed will increase or decrease by 5 km/h (3 mph).

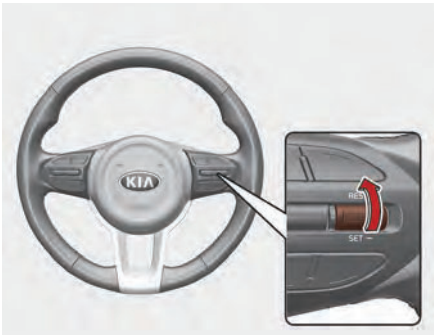

OJA050062

The set speed limit will be displayed on the cluster.



OYB050151L

To drive over the preset speed limit you must depress hard on the accelerator pedal (more than approximately 80%) until the kick down mechanism works with a clicking noise. Then the set speed limit will blink and chime will sound until you return the vehicle speed within the speed limit.

NOTICE

- Depressing the accelerator pedal less than approximately 50%, the vehicle will not speed over the preset speed limit but maintain the vehicle speed within the speed limit.
- A clicking noise heard from the kick down mechanism by depressing the accelerator pedal fully is a normal condition.

To turn off the speed limit control, do one of the following:

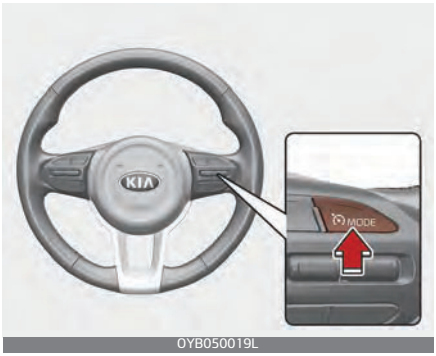

OYB050019L

- Press the Driving Assist MODE button once again.
- Press the Driving Assist button (If you press the Driving Assist button, the cruise function will turn on)

If you press the O button once, the set speed limit will cancel, but it will not turn the function off. If you wish to reset the speed limit, move the switch up (to RES+) or down (to SET-) to the desired speed.



OYB050151L

CAUTION

The "OFF" indicator will blink if there is a problem with speed limit control function.

If this occurs, have the function checked by a professional workshop. Kia recommends to visit an authorized Kia dealer/service partner.

Intelligent Speed Limit Warning (ISLW) (if equipped)



Intelligent Speed Limit Warning displays the speed limit information and overtaking restriction of the current road through the instrument cluster and the navigation. ISLW reads the traffic signs through the front view camera, which is attached on the upper part of the inner front windshield.ISLW also utilizes the navigation and vehicle information to display the speed limit information.

⚠ WARNING

- Intelligent Speed Limit Warning function is only a supplemental function and is not always able to correctly display speed limits and overtaking restrictions.
- The driver still holds the responsibility not to exceed the maximum speed limit.
- ISLW detects the traffic signs through the front view camera to display the speed limit information. Therefore, ISLW may not properly operate, when it is hard to detect the traffic signs. For further details, please refer "Limitations of the function" on page 5-115.
- Pay extreme caution to keep the front view camera sensor out of water.
- Do not arbitrarily disassemble the front view camera assembly, nor apply any impact on the front view camera assembly.
- Do not locate any reflective objects (i.e. white paper, mirror) over the dashboard. Any light reflection may cause a malfunction of ISLW.
- The function is not available in all countries.

✻ NOTICE

In the following case, have the function checked by a professional workshop.Kia recommends to visit an authorized Kia dealer/service partner:

- The windshield glass is replaced.
- The the front view camera or related parts are repaired or removed.

Function setting and activation

Function setting

- The driver can activate the Speed Limit Warning by selecting 'User Settings → Driver Assistance → Driving Assist → Speed Limit Warning.
- When ISLW is activated, the symbols appear on the instrument cluster to display the speed limit information and overtaking restriction.
- When ISLW is activated in the navigation setting, the above information and the restriction are also displayed on the navigation.

Function activation

- ISLW displays the speed limit information and warns the overtaking restriction, when your vehicle passes by the relevant traffic signs.
- ISLW displays the previous speed limit information, right after the ignition switch or ENGINE START/STOP button is placed to the ON position.
- You may find different speed limit information for the same road. The information is displayed depending on the driving situations. Because, traffic signs with additional sign (e.g. rainy, arrow, etc.) are also detected and compared with vehicle internal data (e.g. wiper operation, turn signal, etc.).

✻ NOTICE

The speed limit information on the instrument cluster may differ from the one on the navigation. In this case, check the speed unit setting on the navigation.

Display

Display in the bottom of the cluster



OYB050173L

The cluster displays the speed limit information, overtaking restriction and conditional road sign.

Conditional road sign



OYB050174L

If ISLW detects a conditional road sign, the symbol of road sign is overlapped at the bottom or left of the speed limit on the cluster.

There may be signs with different speed limits on the same road. For example, normally, the speed limit is 120 km/h (75 mph), however the speed limit is 90 km/h (55 mph) when it is raining or snowing.

The conditional road sign means that you observe the speed limit and overtaking prohibition on certain conditions, such as when rain or snow.

No reliable speed limit information


OYB050175L

The symbol is displayed on the instrument cluster and the navigation, when Intelligent Speed Limit Warning does not have any reliable speed limit information.

No passing information



OYB050176L


OYB050177L

The symbol is displayed on the instrument cluster and the navigation, when ISLW detects a no overtaking sign.

Unlimited speed (only in Germany)


WUM-205

The symbol, ‘end of limitation’, is displayed on the instrument cluster for the roads in Germany, which have no speed limit applicable. It is displayed, until the vehicle passes by another speed limit sign.

End of a speed limit



WUM-207



WUM-208

After passing "end of speed limitation" sign ISLW provides information from navigation to inform driver of perhaps afterwards applicable speed limit.

Warning message



OYB050178L

The message will appear when camera's field of view is covered by some objects. The function stops until the field of view is normal.

Check the windshield around the camera view area.If the function does not work normally even though camera's field of view is cleared, have the function checked by a professional workshop. Kia recommends to visit an authorized Kia dealer/service partner.

Function malfunction



OYB050179L

When ISLW is not working properly, the warning message will come on for a few second. After the message disappears, the master warning light will illuminate.

Limitations of the function

ISLW may not operate properly or may not provide correct information in the following situations.

When the traffic sign condition is poor

- The traffic sign is located on a sharp curve.
- The traffic sign is improperly positioned (i.e. turned over, blocked by an object, and damaged).
- Another vehicle blocks the traffic sign.

- The LED light of the traffic sign is broken.
- There is sunlight glare around the traffic sign due to low solar altitude.
- It is dark at night.
- There is bright light around the traffic sign.
- If road signs do not correspond to the standard and etc.
- The conditional road sign is indicated by letter, not specified image such as trailer, rain or snow.

When external condition is intervened

- Your vehicle drives right after another vehicle.
- The bus or truck, on which the speed sticker is attached, passes by your vehicle.
- Your vehicle drives in an area, which is uncovered by the navigation function.
- There is a malfunction with the navigation.
- Your navigation has not been updated.
- Your navigation is being updated.
- As a result of incorrect detection by the camera.
- The top speed limitations stored in the navigation function are incorrect.
- The camera is calibrated right after the vehicle is delivered.
- There is something wrong with GPS.
- If ISLW does not recognize normally vehicle status such as outside temperature, ISLW cannot display the conditional road sign instead of road sign of current road.

When front visibility is poor

- The weather is bad, such as raining, snowing, and fogging.
- There is dirt, ice or frost on the front windshield, where the camera is installed.
- The camera lens is blocked by an object, such as sticker, paper, or fallen leaf.

Driver Attention Warning (DAW) (if equipped)

Basic function

Driver Attention Warning will determine the driver's attention level by analyzing driving pattern, driving time, etc. while driving. The function will recommend a break when the driver's attention level falls below a certain level to help drive safely.

Leading vehicle departure warning function

Leading Vehicle Departure warning function will inform the driver when the front vehicle departs from a stop.

Detecting sensor


OST050066L

The front view camera is used as a detecting sensor to detect driving patterns and front vehicle departure while vehicle is being driven.

Refer to the picture above for the detailed location of the detecting sensor.

⚠ CAUTION

Always keep the front view camera in good condition to maintain optimal performance of Driver Attention Warning.

For more details on the precautions of the front view camera, refer to "Forward Collision-Avoidance Assist (FCA) (Sensor fusion) (if equipped)" on page 5-66.

Function settings

Setting functions for the system

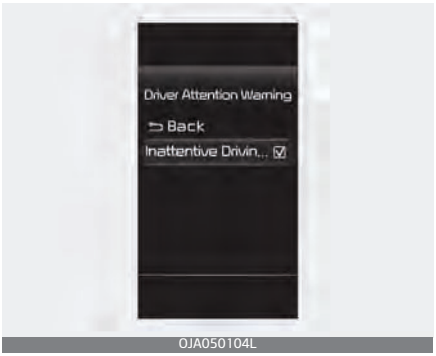

OJA050104L

Driver Attention Warning

- Driver Attention Warning is set to be in the OFF position, when your vehicle is first delivered to you from the factory.
- To turn ON Driver Attention Warning, turn on the engine, and then select 'User Settings → Driver Assistance → Driver Attention Warning → Leading Vehicle Departure Warning/Inattentive Driving Warning' on the LCD display.
- If 'Inattentive Driving Warning' is selected, the function will inform the driver the driver's attention level and will recommend taking a break when the level falls below a certain level.

Leading Vehicle Departure warning

If 'Leading Vehicle Departure warning's is selected, the function will inform the driver when the front vehicle departs from a stop.

Warning timing



OJA050141L

The driver can select the initial warning activation time in the User Settings in the LCD display by selecting 'User Settings → Driver Assistance → Warning Timing'.

The options for the initial Inattentive Driving Warning includes the following:

- Normal: Driver Attention Warning helps alert the driver of his/her fatigue level or inattentive driving practices faster than Late mode.
- Late: Driver Attention Warning helps alert the driver of his/her fatigue level or inattentive driving practices later than Normal mode.

✻ NOTICE

If the engine is restarted, Driver Attention Warning will maintain the last setting.

Function operation

Basic function

Function display and warning

The basic function of Driver Attention Warning is to inform the driver the 'Attention Level' and to alert the driver 'Consider taking a break'.

Attention level

System off



OJA050130L

Standby/Disabled



OJA050134L

Attentive driving



OJA050131L

Inattentive driving



OJA050132L

- The driver can monitor his/her driving conditions on the cluster.
- When the 'Inattentive Driving Warning' is deselected from the Settings menu, 'System Off' is displayed.
- The function will operate when vehicle speed is between 0~180km/h (0~110mph).
- When vehicle speed is not within the operating speed, the message 'Standby' will be displayed.
- The driver's attention level is displayed on the scale of 1 to 5. The

lower the level is, the more inattentive the driver is.
- The level decreases when the driver does not take a break for a certain period of time.

Taking a break



OJA050133L

- The 'Consider taking a break' message will appear on the cluster and an audible warning will sound to suggest that the driver take a break, when the driver's attention level is below 1.
- Driver Attention Warning will not suggest a break when the total driving time is shorter than 10 minutes or 10 minutes has not passed after the last break was suggested.

⚠ WARNING

For your safety, change the Settings after parking the vehicle at a safe location.

⚠ CAUTION

- Driver Attention Warning may suggest a break depending on the driver's driving pattern or habits, even if the driver doesn't feel fatigue.
- Driver Attention Warning is a supplemental function and may not be able to determine whether the driver is inattentive.
- The driver who feels fatigued should take a break at a safe location, even though there is no break suggestion by Driver Attention Warning.

✻ NOTICE

- For more details on setting the functions in the infotainment system, refer to "Instrument cluster" on page 4-50.
- Driver Attention Warning will reset the last break time to 00:00 in the following situations:
  - The engine is turned off
  - The driver unfastens the seat belt and opens the driver's door.
  - The vehicle is stopped for more than 10 minutes.
  - When the driver resets Driver Attention Warning, the last break time is set to 00:00 and the driver's attention level is set to High.

Leading vehicle departure alert function



OST050220L

When the front vehicle departs from a stop, Leading Vehicle Departure Alert will inform the driver by displaying the 'Leading vehicle is driving away' message on the cluster and an audible warning will sound.

⚠ WARNING

- If any other function's warning message is displayed or audible warning is generated, Leading Vehicle Departure Warning message may not be displayed and audible warning may not be generated.
- The driver should hold the responsibility to safely drive and control the vehicle.

⚠ CAUTION

- Leading Vehicle Departure Warning is a supplemental function and may not alert the driver whenever the front vehicle departs from a stop.
- Always check the front of the vehicle and road conditions before departure.

Function malfunction and limitations

Function malfunction



OJA050135L

When Driver Attention Warning is not working properly, the 'Check Driver Attention Warning (DAW) system' warning message will appear on the cluster. If this occurs, we recommend that you have your vehicle inspected by an authorized Kia dealer/service partner.

Limitations of the function

Driver Attention Warning may not work properly in the following situations:

- The vehicle is driven violently
- The vehicle intentionally crosses over lanes frequently

- The vehicle is controlled by Driver Assistance system, such as Lane Keeping Assist.

Leading vehicle departure Warning feature

- When the vehicle cuts in

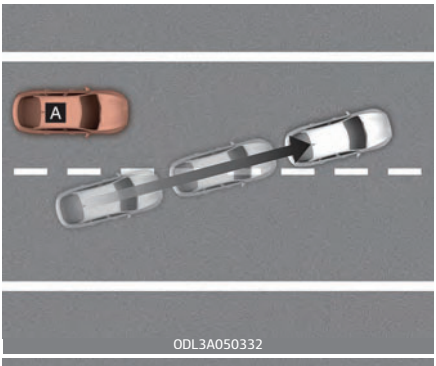

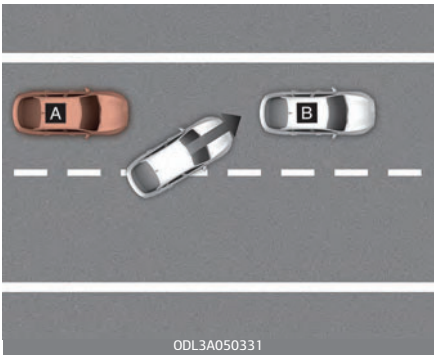

[A]: Your vehicle, [B]: Front vehicle

If a vehicle cuts in front of your vehicle, Leading Departure Alert may not operate properly.

- When the vehicle ahead sharply steers

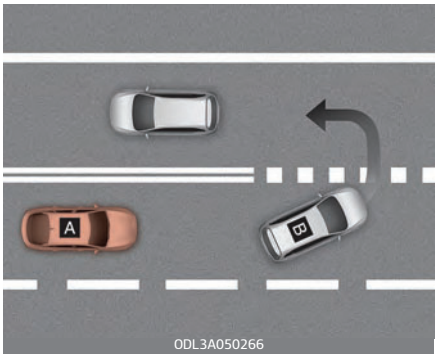

[A] : Your vehicle, [B] : Front vehicle

If the vehicle in front makes a sharp turn, such as to turn left or right or make a U- turn, etc., Leading Vehicle Departure Alert may not operate properly.

- When the vehicle ahead abruptly departures

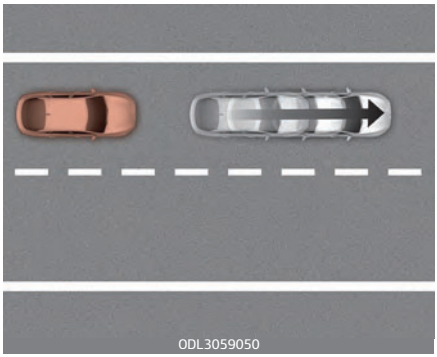

If the vehicle in front abruptly departures, Leading Vehicle Departure Alert may not operate properly.

- When a pedestrian or bicycle is between you and the vehicle ahead


ODL3A050333

If there is a pedestrian(s) or bicycle(s) in between you and the vehicle in front, Leading Vehicle Departure Alert may not operate properly.

- When in a parking lot

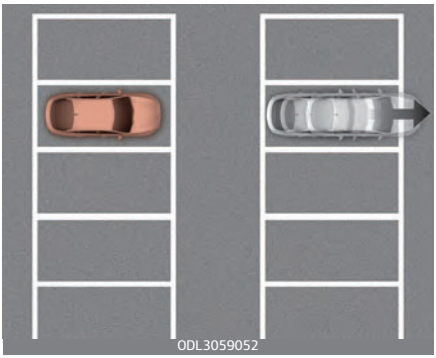
ODL3059052

If a vehicle parked in front drives away from you, Leading Vehicle Departure Alert may alert you that the parked vehicle is driving away.

- When driving at a tollgate or intersection, etc.

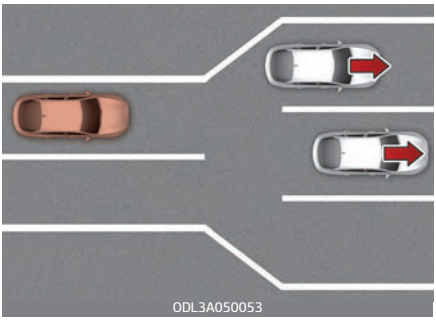
ODL3A050053

If you pass a tollgate or intersection with lots of vehicles or you drive where lanes are merged or divided frequently, Leading Vehicle Departure Alert may not operate properly.

⚠ CAUTION

For more details on the precautions of the front view camera, refer to "Forward Collision-Avoidance Assist (FCA) (Sensor fusion) (if equipped)" on page 5-66.

Cruise Control (CC) (if equipped)

Cruise Control operation



OJA050106

(1) CRUISE indicator (CRUISE)

(2) Set speed

Cruise Control allows you to drive at speeds above 30 km/h (20 mph) without depressing the accelerator pedal.

Function operation

To set speed

1. Accelerate to the desired speed, which must be more than 30 km/h (20 mph).
2. Press the Driving Assist button at the desired speed. The set speed and Cruise (CRUISE) indicator will illuminate on the cluster.

Type A

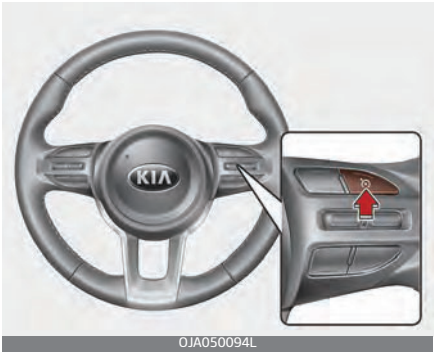

OJA050094L

Type B

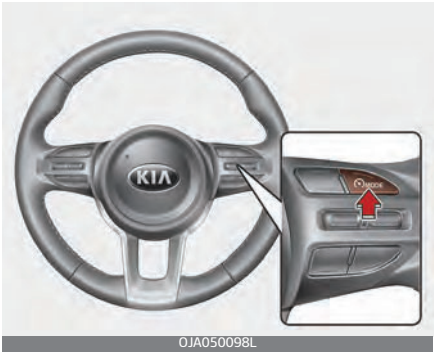

OJA050098L

3. Release the accelerator pedal. Vehicle speed will maintain the set speed even when the accelerator pedal is not depressed.

✻ NOTICE

On a steep slope, the vehicle may slightly slow down or speed up while driving uphill or downhill.

To increase set speed:

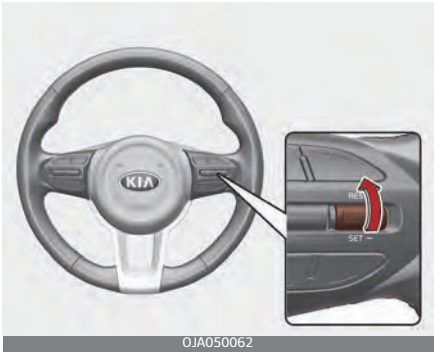

OJA050062

- Push the RES+ switch up and release it immediately. The cruising speed will increase by 1 km/h (1 mph) each time the switch is operated in this manner.
- Push the RES+ switch up and hold it while monitoring the set speed on the cluster. The cruising speed will increase to the nearest multiple of ten (multiple of five in mph) at first, and then increase by 10 km/h (5 mph) each time the switch is operated in this manner. Release the switch when the desired speed is shown and the vehicle will accelerate to that speed.

To decrease speed:

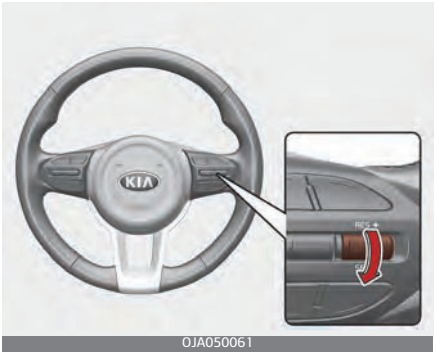

OJA050061

- Push the SET– switch down and release it immediately. The cruising speed will decrease by 1 km/h (1 mph) each time the switch is operated in this manner.
- Push the SET– switch down and hold it while monitoring the set speed on the cluster. The cruising speed will decrease to the nearest multiple of ten (multiple of five in mph) at first, and then decrease by 10 km/h (5 mph) each time the switch is operated in this manner. Release the switch at the speed you want to maintain.

To temporarily pause the function

Manually

If you want to speed up temporarily when Cruise Control is on, depress the accelerator pedal. Increased speed will not interfere with Cruise Control operation or change the set speed.

To return to the set speed, take your foot off the accelerator pedal.

Automatically

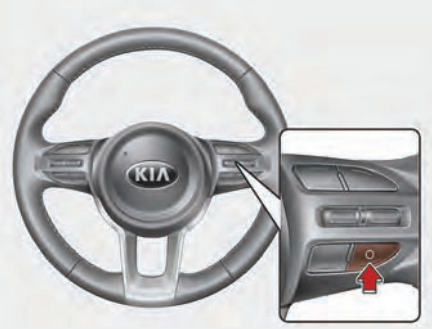

OJA050096L

Cruise Control will be paused when:

- Depress the brake pedal.
- Depress the clutch pedal if equipped with a Manual Transmission.
- Shift into N (Neutral)
- Press the 0 button located on the steering wheel.
- ESC (Electronic Stability Control) is operating.
- Downshifting to 2nd gear when in Manual Shift mode.
- Decrease the vehicle speed to less than approximately 30 km/h (20 mph).

The set speed will turn off but the Cruise (CRUISE) indicator will stay on.

To resume the function

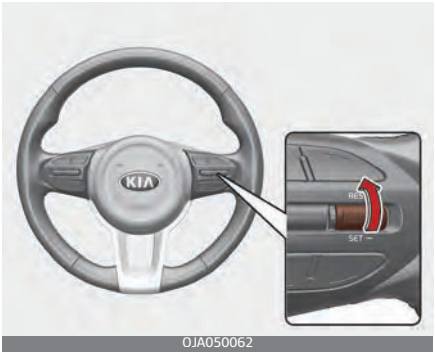

OJA050062

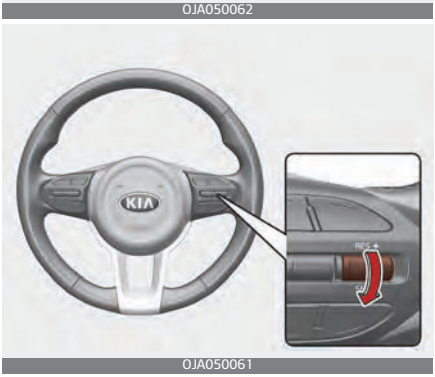

OJA050061

Push the RES+ or SET- switch.

If you push the RES+ switch up or RES- switch down, vehicle speed will be set to the current speed on the cluster.

If you push the switch, vehicle speed will resume to the preset speed.

Vehicle speed must be above 30 km/h (20 mph) for the function to resume.

To turn off the function

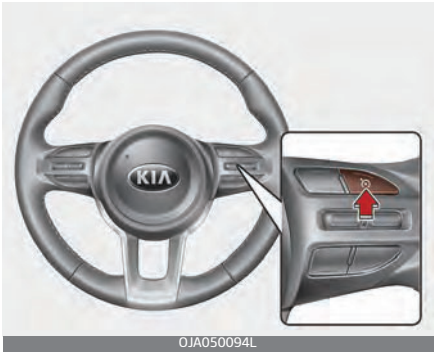

OJA050094L

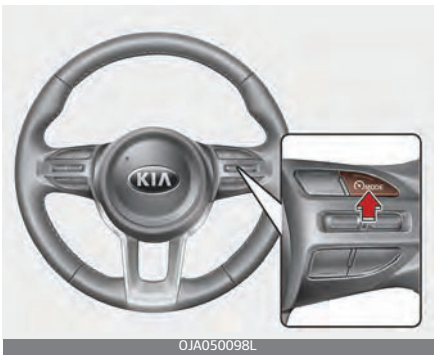

OJA050098L

Press the Driving Assist button to turn Cruise Control off. The Cruise (CRUISE) indicator will go off.

Always press the Driving Assist button to turn Cruise Control off when not in use.

⚠ WARNING

Take the following precautions when using Cruise Control:

- Always set the vehicle speed under the speed limit in your country.
  Keep Cruise Control off when the function is not in use, to avoid inadvertently setting a speed. Check that the Cruise (CRUISE) indicator is off.
- Cruise Control does not substitute for proper and safe driving. It is the responsibility of the driver to always drive safely and should always be aware of unexpected and sudden situations from occurring.
- Always drive cautiously to prevent unexpected and sudden situations from occurring. Pay attention to the road conditions at all times.
- Do not use Cruise Control when it may be unsafe to keep the vehicle at a constant speed:
  - When driving in heavy traffic, or when traffic conditions make it difficult to drive at a constant speed
  - When driving on rainy, icy, or snow-covered roads
  - When driving on hilly or windy roads
  - When driving in windy areas
  - When driving with limited view (possibly due to bad weather, such as fog, snow, rain and sandstorm)
- Do not use Cruise Control when towing a trailer.

Smart Cruise Control (SCC) (if equipped)

Smart Cruise Control allows you to program the vehicle to maintain constant speed and distance detecting the vehicle ahead without depressing the accelerator or brake pedal.



OST050194L

1. Cruise indicator (CRUISE)
2. Set speed
3. Vehicle Distance

⚠ WARNING

For your safety, please read the owner's manual before using Smart Cruise Control.

✻ NOTICE

To activate Smart Cruise Control, depress the brake pedal at least once after turning the ignition switch or ENGINE START/STOP button to the ON position or starting the engine. This is to check if the brake switch which is important part to cancel Smart Cruise Control is in normal condition.

⚠ WARNING

- If Smart Cruise Control is left on, (cruise indicator in the instrument cluster illuminated) Smart Cruise Control can be activated unintentionally. Keep Smart Cruise Control off (cruise indicator turn off) when Smart Cruise Control is not used.
- Use Smart Cruise Control only when traveling on open highways in good weather.
- Do not use Smart Cruise Control when it may not be safe to keep the car at a constant speed. For instance.
  - Highway interchange and tollgate
  - Road surrounded by abnormally multiple steel constructions (subway construction, steel tunnel, etc.)
  - Parking lot
  - Lanes beside guard rail on a road
  - Slippery road with rain, ice, or snow covered
  - Abrupt curved road
  - Steep hills
  - Windy roads
  - Off roads
  - Roads under construction
  - Rumble strip
  - When driving on a sharp curve

  - When driving in heavy traffic or when traffic conditions make it difficult to drive at a constant speed
  - When the vehicle sensing ability decreases due to vehicle modification resulting level difference of the vehicle's front and rear
  - When driving with limited view (possibly due to bad weather, such as fog, snow, rain or sandstorm)
- Pay particular attention to the driving conditions whenever using Smart Cruise Control.
- Smart Cruise Control is not a substitute for safe driving. It is the responsibility of the driver to always check the speed and distance of the vehicle ahead.
- Be careful when driving downhill using SCC.
- Limited visibility (rain, snow, smog, etc.)
- Cruise function should not be used when the vehicle is being towed to prevent any damage.
- Always set the vehicle speed under the speed limit in your country.
- Unexpected situations may lead to possible accidents. Pay attention continuously to road conditions and driving even when Smart Cruise Control is being operated.

Function settings

Setting functions for the system

Type A

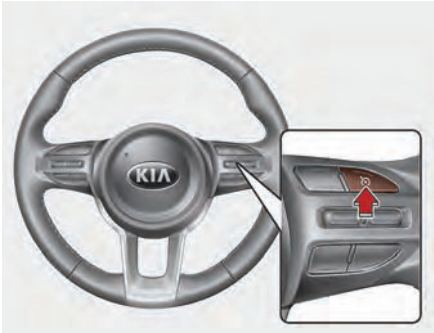

OJA050094L

Type B

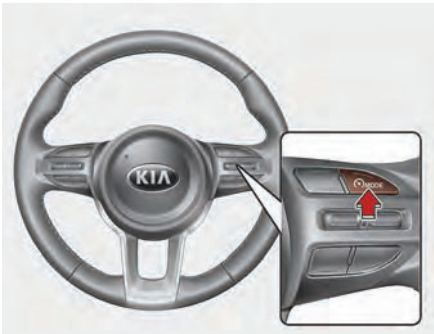

OJA050098L

1. Press the Driving Assist button to turn the function on. The CRUISE indicator in the instrument cluster will illuminate.
2. Accelerate to the desired speed. Smart Cruise Control speed can be set as follows:
   - Move down the SET- switch and hold it. Your vehicle set speed is below 10 km/h (5 mph) and over 180 km/h

3. The cruise indicator light will illuminate. distance indicator on the cluster is appeared and the CRUISE indicator is illuminated continuously.
4. If there is no vehicle in front of you, the set speed will be maintained, but if there is a vehicle in front of you, the speed may decrease to maintain the distance to the vehicle ahead. If the vehicle ahead accelerates, your vehicle will travel at a steady cruising speed after accelerating to the set speed.

✻ NOTICE

- If your vehicle speed is between 10~ 30 km/h (5~ 20 mph) when you press the (/MODE) button, Smart Cruise Control speed will be set to 30 km/h (20 mph).
- The driving assist button symbol may be different per vehicle such as (/MODE).

To set Vehicle Distance

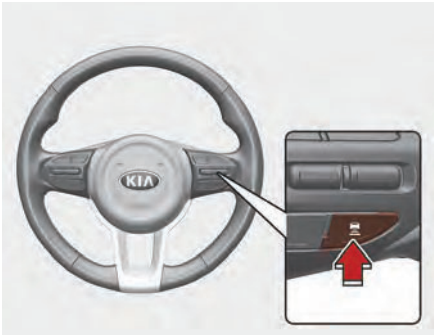

OYB050197L

Each time the Vehicle Distance button is pressed, the Vehicle Distance changes as follows:

✻ NOTICE

- If you drive at 90 km/h (56 mph), the distance is maintained as follows:
  - Distance 4 - approximately 52.5 m (172 ft.)
  - Distance 3 - approximately 40 m (130 ft.)
  - Distance 2 - approximately 32.5 m (106 ft.)
  - Distance 1 - approximately 25 m (82 ft.)
- The distance is set to the last set distance when the engine is restarted, or when the function was temporarily canceled.

To increase speed

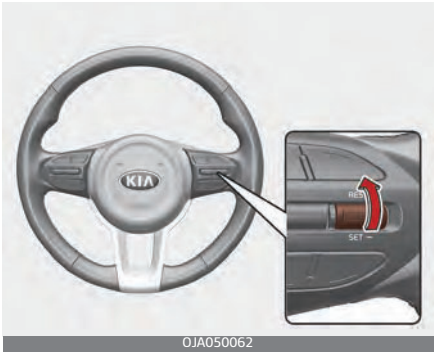

OJA050062

- Move up the RES+ switch, and release it immediately. The cruising speed will increase by 1 km/h (1 mph) each time the switch is operated in this manner.
- Move up the RES+ switch, and hold it while monitoring the set speed on the cluster. The cruising speed will increase by 10 km/h or 5 mph each time the switch is operated in this manner. Release the switch when the desired speed is shown, and the vehicle will accelerate to that speed. You can set the speed to 180 km/h (110 mph).

⚠ WARNING

Check the driving condition before using the RES+ switch. Driving speed may sharply increase when you push up and hold the RES+ switch.

To decrease speed



OJA050061

- Move down the SET- switch, and release it immediately. The cruising speed will decrease by 1 km/h (1 mph) each time the switch is operated in this manner.
- Move down the SET- switch, and hold it while monitoring the set speed on the cluster. The cruising speed will decrease by 10 km/h or 5 mph each time the switch is operated in this manner.
- Release the switch at the speed you want to maintain. You can set the speed to 30 km/h (20 mph).

To temporarily cancel the function

Type A

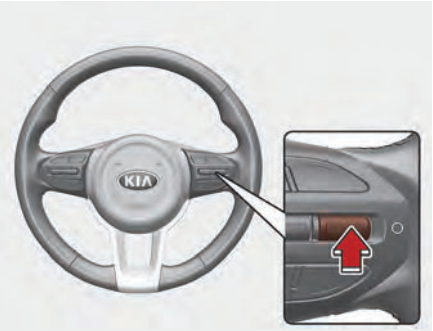

OYB050198L

Type B

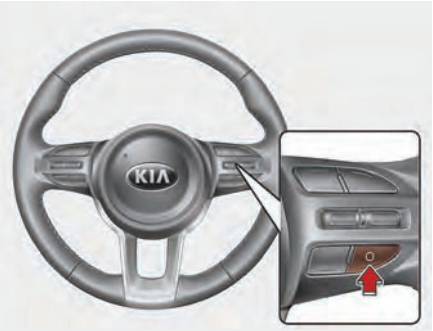

OJA050096L

Press the (O) button or depress the brake pedal temporarily to cancel Smart Cruise Control.

To resume the function

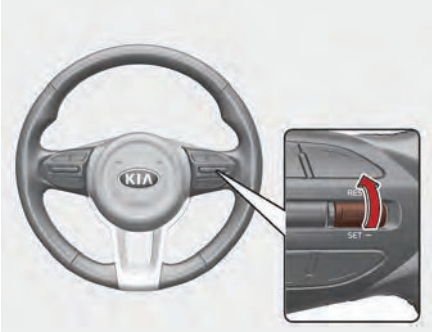

OJA050062

If any method other than the lever was used to cancel cruising speed and the function is still activated, the cruising speed will automatically resume when you move the switch up.If you move up the RES+ switch, the speed will resume to the recently set speed. Vehicle speed must be above 10 km/h (5 mph) for the function to resume.

⚠ WARNING

Check the driving condition before move the switch. Driving speed may sharply increase or decrease when you move the switch.

To turn off the function

Type A

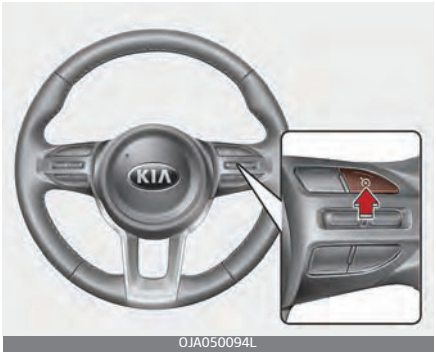

OJA050094L

Type B

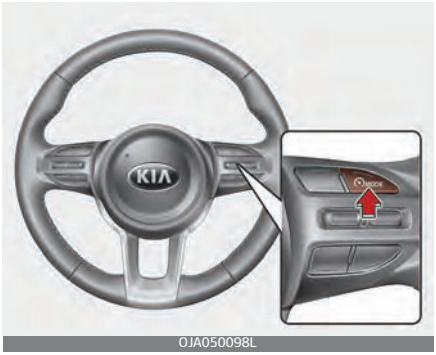

OJA050098L

Press the (/MODE) button to turn Smart Cruise Control off.

✻ NOTICE

If your vehicle is equipped with Manual Speed Limit Assist, press and hold the (/MODE) button to turn off Smart Cruise Control. However Manual Speed Limit Assist will turn on.

To adjust the sensitivity of smart cruise control

The sensitivity of vehicle speed when following the front vehicle to maintain the set distance can be adjusted.Go to the 'User Settings → Driver Assistance → SCC Reaction → Fast/Normal/Slow' on the LCD display. You may select one of the three stages you prefer.

SCC Reaction

- Fast:

Vehicle speed following the front vehicle to maintain the set distance is faster than normal speed.

- Normal:

Vehicle speed following the front vehicle to maintain the set distance is normal

- Slow:

Vehicle speed following the front vehicle to maintain the set distance is slower than normal speed.

Function operating

Operating conditions

Smart Cruise Control will operate when the following conditions are satisfied.

Basic function

- The gear is in D (Drive)
- The driver's door is closed
- Your vehicle speed is within the operating speed range 10~180 km/h (5~110 mph)
- ESC (Electronic Stability Control), TCS (Traction Control System) or ABS is on
- ESC (Electronic Stability Control), TCS (Traction Control System) or ABS is not operating
- Engine rpm is not in the red zone
- Forward Collision-Avoidance Assist brake control is not operating
- Remote Smart Parking Assist brake control is not operating
- ISG is not operating

Overtaking Acceleration Assist

Overtaking Acceleration Assist will operate when the turn signal indicator is turned on to the left (left-hand drive) or turned on to the right (right-hand drive) while Smart Cruise Control is operating, and the following conditions are satisfied:

- Your vehicle speed is above 60 km/h (40 mph)
- The hazard warning flasher is off
- A vehicle is detected in front of your vehicle
- Deceleration is not needed to maintain distance with the vehicle in front

⚠ WARNING

- When the turn signal indicator is turned on to the left (left-hand drive) or turned on to the right (right-hand drive) while there is a vehicle ahead, the vehicle may accelerate temporarily. Pay attention to the road conditions at all times.
- Regardless of your countries driving direction, Overtaking Acceleration Assist will operate when the conditions are satisfied. When using the function in countries with different driving direction, always check the road conditions at all times.

Function display and control

Smart Cruise Control will be displayed as below depending on the status of the function.

Operating



OST050187L

Temporarily canceled



OST050210L

- When operating

(1) Whether there is a vehicle ahead and the selected distance level are displayed.
(2) Set speed is displayed.
(3) Whether there is a vehicle ahead and the target vehicle distance are displayed.

- When temporarily canceled

(1) CRUISE indicator is displayed.
(2) The previous set speed is shaded.
(3) Vehicle ahead and distance level are not displayed.

NOTICE

- The actual distance with the front vehicle is displayed.
- The target distance may vary according to the vehicle speed and the set distance level. If vehicle speed is low, even though the vehicle distance have changed, the change of the target vehicle distance may be small.

To temporarily accelerate



OST050211L

If you want to speed up temporarily when Smart Cruise Control is on, depress the accelerator pedal. While the speed is increasing, the set speed, distance level and target distance will blink on the cluster.

WARNING

Be careful when accelerating temporarily, because the speed is not controlled automatically even if there is a vehicle in front of you.

Function temporarily canceled



OYB050213L

Smart Cruise Control will be temporarily canceled automatically when:

- The vehicle speed is above 190 km/h (120 mph)
- The vehicle speed is less than 10 km/h (5 mph).
- The accelerator pedal is continuously depressed for a certain period of time
- The conditions for Smart Cruise Control to operate is not satisfied

If the function is temporarily canceled, the 'Smart Cruise Control canceled' (or 'SCC (Smart Cruise Control) canceled') warning message will appear on the cluster, and an audible warning will sound to warn the driver.

⚠ WARNING

When the function is temporarily canceled, distance with the front vehicle will not be maintained. Always have your eyes on the road while driving, and if necessary, depress the brake pedal to reduce your driving speed in order to maintain a safe distance.

Function conditions not satisfied



OYB050180L

If the Driving Assist (🚗) button, RES+ or SET- switch is pushed when the function's operating conditions are not satisfied, the 'Smart Cruise Control conditions not met' will appear on the cluster, and an audible warning will sound.

Warning road conditions ahead



OST050190L

In the following situation, the 'Watch for surrounding vehicles' warning message will appear on the cluster, and an audible warning will sound to warn the driver of road conditions ahead.

The vehicle in front disappears when Smart Cruise Control is maintaining the distance with the vehicle ahead while driving in low speed.

⚠ WARNING

Always pay attention to vehicles or objects that may suddenly appear in front of you, and if necessary, depress the brake pedal to reduce your driving speed in order to maintain a safe distance.

Collision warning



OST050152L

While Smart Cruise Control is operating, when the collision risk with the vehicle ahead is high, the 'Collision Warning' warning message will appear on the cluster, and an audible warning will sound to warn the driver. Always have your eyes on the road while driving, and if necessary, depress the brake pedal to reduce your driving speed in order to maintain a safe distance.

⚠ WARNING

- In the following situations, Smart Cruise Control may not warn the driver of a collision.
- The distance from the front vehicle is near, or the vehicle speed of the other vehicle is faster or similar with your vehicle
- The speed of the front vehicle is very slow or is at a standstill
- The accelerator pedal is depressed right after Smart Cruise Control is turned on

⚠ WARNING

Take the following precautions when using Smart Cruise Control :

- Smart Cruise Control does not substitute for proper and safe driving. It is the responsibility of the driver to always check the speed and distance to the vehicle ahead.
- Smart Cruise Control may not recognize unexpected and sudden situations or complex driving situations, so always pay attention to driving conditions and control your vehicle speed.
- Keep Smart Cruise Control off when the function is not in use to avoid inadvertently setting a speed.
- Do not open the door or leave the vehicle when Smart Cruise Control

is operating, even if the vehicle is stopped.
- Always be aware of the selected speed and vehicle distance distance.
- Keep a safe distance according to road conditions and vehicle speed. If the vehicle distance distance is too close during high-speed driving, a serious collision may result.
- When maintaining distance with the vehicle ahead, if the front vehicle disappears, the function may suddenly accelerate to the set speed. Always be aware of unexpected and sudden situations from occurring.
- Vehicle speed may decrease on an upward slope and increase on a downward slope.
- Always be aware of situations such as when a vehicle cuts in suddenly.
- When you are towing a trailer or another vehicle, we recommend that Smart Cruise Control is turned off due to safety reasons.
- Turn off Smart Cruise Control when your vehicle is being towed.
- Smart Cruise Control may not operate normally if interfered by strong electromagnetic waves.
- Smart Cruise Control may not detect an obstacle in front and lead to a collision. Always look ahead cautiously to prevent unexpected and sudden situations from occurring.
- Vehicles moving in front of you with a frequent lane change may cause a delay in the function's reaction or may cause the function to react to a vehicle actually in an adjacent lane. Always drive cautiously to prevent unexpected and sudden situations from occurring.
- Always be aware of the surroundings and drive safely, even though a warning message does not appear or an audible warning does not sound.
- If any other function's warning message is displayed or warning sound is generated, Smart Cruise Control warning message may not be displayed and warning sound may not be generated.
- You may not hear the warning sound of Forward Collision-Avoidance Assist if the surrounding is noisy.
- The vehicle manufacturer is not responsible for any traffic violation or accidents caused by the driver.
- Always set the vehicle speed under the speed limit in your country.

NOTICE

- Smart Cruise Control may not operate for 15 seconds after the vehicle is started or the front view camera or front radar is initialized.
- You may hear a sound when the brake is controlled by Smart Cruise Control.

Function malfunction and limitations

Function malfunction

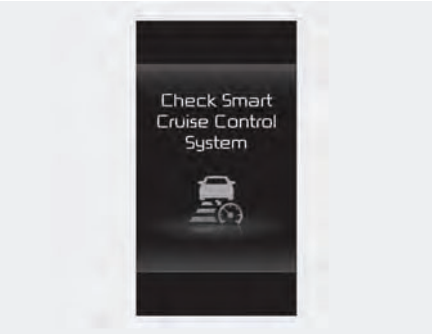

OYB050212L

The message will appear when Smart Cruise Control is not functioning normally.In this case, have the function checked by a professional workshop.Kia recommends to visit an authorized Kia dealer/service partner.

Function disabled

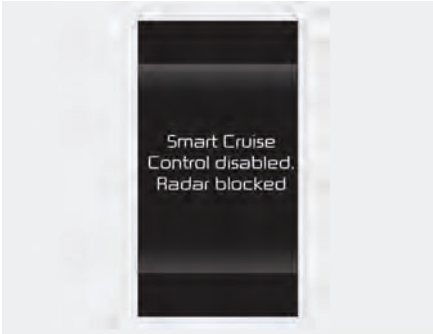

OYB050215L

When the front radar cover or sensor is covered with snow, rain, or foreign matters, it can reduce the detecting performance and temporarily limit or disable Smart Cruise Control.

If this occurs the 'Smart Cruise Control disabled. Radar blocked obscured' (or 'SCC (Smart Cruise Control) disabled. Radar blocked') warning message, and warning lights will illuminate on the cluster.

The function will operate normally when such snow, rain or foreign matter is removed.

WARNING

Even though the warning message does not appear on the cluster, Smart Cruise Control may not properly operate.

⚠ CAUTION

Smart Cruise Control may not properly operate in an area (e.g. open terrain), where any substance are not detected after turning ON the engine.

Limitations of the function

Smart Cruise Control may not operate normally, or the function may operate unexpectedly under the following circumstances:

- The detecting sensor or the surroundings are contaminated or damaged
- Washer fluid is continuously sprayed, or the wiper is on
- The camera lens is contaminated due to tinted, filmed or coated windshield, damaged glass, or stuck of foreign matters (sticker, bug, etc.) on the glass
- Moisture is not removed or frozen on the windshield
- The field of view of the front view camera is obstructed by sun glare
- Street light or light from an oncoming vehicle is reflected on the wet road surface, such as a puddle in the road
- The temperature around the front view camera is high or low
- An object is placed on the dashboard
- The surrounding is very bright
- The surrounding is very dark, such as in a tunnel, etc.
- The brightness changes suddenly, for example when entering or exiting a tunnel
- The brightness outside is low, and the headlamps are not on or are not bright
- Driving in heavy rain or snow, or thick fog
- Driving through steam, smoke or shadow
- Only part of the vehicle is detected
- The vehicle in front has no tail lights, tail lights are located unusually, etc.
- The brightness outside is low, and the tail lamps are not on or are not bright
- The rear of the front vehicle is small or does not look normal (i.e. tilted, overturned, etc.)
- The front vehicle's ground clearance is low or high
- A vehicle suddenly cuts in front
- Driving through a tunnel or railroad bridge
- A material is near that reflects very well on the front radar, such as a guardrail, nearby vehicle, etc.
- The bumper around the front radar is impacted, damaged or the front radar is out of position
- The temperature around the front radar is high or low

- Driving in large areas where there are few vehicles or structures (i.e. desert, meadow, suburb, etc.)
- The vehicle in front is made of material that does not reflect on the front radar
- Driving near a highway (or motorway) interchange or tollgate
- Driving on a slippery surface due to snow, water puddle, ice, etc.
- Driving on a curved road
- The vehicle in front is detected late
- The vehicle in front is suddenly blocked by a obstacle
- The vehicle in front suddenly changes lane or suddenly reduces speed
- The vehicle in front is bent out of shape
- The front vehicle's speed is fast or slow
- With a vehicle in front, your vehicle changes lane at low speed
- The vehicle in front is covered with snow
- You are driving unstably
- You are on a roundabout and the vehicle in front is not detected
- You are continuously driving in a circle
- Driving in a parking lot
- Driving through a construction area, unpaved road, partial paved road, uneven road, speed bumps, etc.
- Driving on an incline road, curved road, etc.
- Driving through a roadside with trees or streetlights
- The adverse road conditions cause excessive vehicle vibrations while driving
- Your vehicle height is low or high due to heavy loads, abnormal tire pressure, etc.
- Driving through a narrow road where trees or grass or overgrown
- There is interference by electromagnetic waves, such as driving in an area with strong radio waves or electrical noise

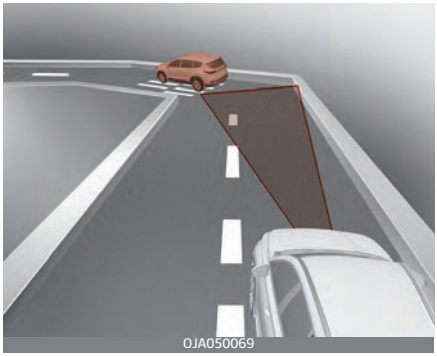

- Driving on a curve

On curves, Smart Cruise Control may not detect a vehicle in the same lane, and may accelerate to the set speed. Also, vehicle speed may rapidly decrease when the vehicle ahead is detected suddenly.

Select the appropriate set speed on curves and apply the brake pedal or accelerator pedal according to the road and driving conditions ahead.

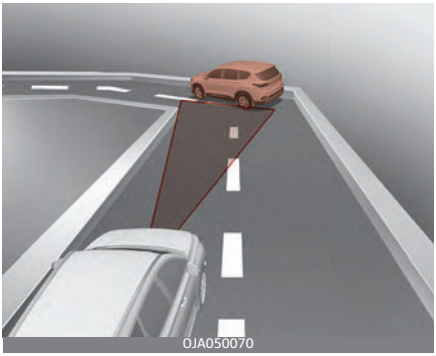
OJA050070

Your vehicle speed can be reduced due to a vehicle in the adjacent lane.

Apply the accelerator pedal and select the appropriate set speed. Check to be sure that the road conditions permit safe operation of Smart Cruise Control.


OJA050071

- Driving on a slope

During uphill or downhill driving, Smart Cruise Control may not detect a moving vehicle in your lane, and cause your vehicle to accelerate to the set speed. Also, vehicle speed will rapidly decrease when the vehicle ahead is detected suddenly.

Select the appropriate set speed on inclines and apply the brake pedal or accelerator pedal according to the road and driving conditions ahead.

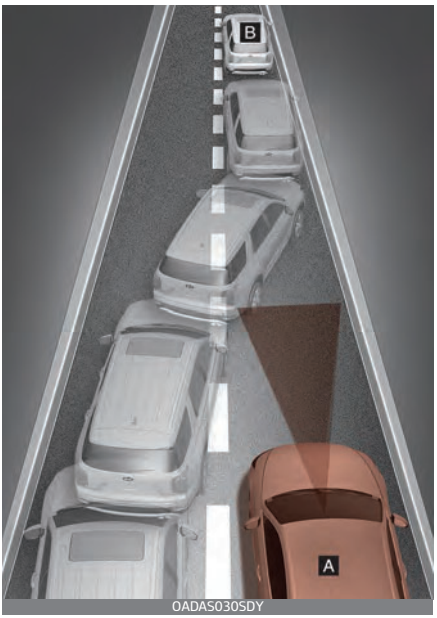

OADAS030SDY

- Changing lanes

[A]: Your vehicle, [B]: Lane changing vehicle

When a vehicle moves into your lane from an adjacent lane, it cannot be detected by the sensor until it is in the sensor's detection range.

Smart Cruise Control may not immediately detect the vehicle when the vehicle changes lanes abruptly. In this case, you must maintain a safe braking distance, and if necessary, depress the brake

pedal to reduce your driving speed in order to maintain a safe distance.

- Detecting vehicle

In the following cases, some vehicles in your lane cannot be detected by the sensor:

- Vehicles offset to one side
- Slow-moving vehicles or sudden-decelerating vehicles
- Oncoming vehicles
- Stopped vehicles
- Vehicles with small rear profile, such as trailers
- Narrow vehicles, such as motorcycles or bicycles
- Special vehicles
- Animals and pedestrians

In the following cases, the vehicle in front cannot be detected by the sensor:

- Vehicles with higher clearance or vehicles carrying loads that stick out of the back of the vehicle
- Vehicles that has the front lifted due to heavy loads
- You are steering your vehicle
- Driving on narrow or sharply curved roads

Adjust your vehicle speed by depressing the brake pedal according to the road and driving conditions ahead.

When a vehicle ahead disappears at an intersection, your vehicle may accelerate. Always pay attention to road and driving conditions while driving.

When a vehicle in front of you merges out of the lane, Smart Cruise Control may not immediately detect the new vehicle that is now in front of you. Always pay attention to road and driving conditions while driving.

Always look out for pedestrians when your vehicle is maintaining a distance with the vehicle ahead.

Lane Following Assist (LFA) (if equipped)

Lane Following Assist is designed to detect lane markings or vehicles on the road, and assists the driver's steering to help keep the vehicle between lanes.

Detecting sensor

Front view camera



The front view camera is used as a detecting sensor to detect lane markings and front vehicles.

Refer to the picture above for the detailed location of the detecting sensor.

⚠ CAUTION

For more details on the precautions of the front view camera, refer to "Forward Collision-Avoidance Assist (FCA) (Sensor fusion) (if equipped)" on page 5-66.

Function settings

Setting functions for the system

Turning the function ON/OFF



With the ignition switch or the ENGINE START/STOP button in the ON position, press the Lane Driving Assist button located on the steering wheel to turn on Lane Following Assist. The white or green ( ) indicator light will illuminate on the cluster.

Press the button again to turn off the function.

Function operation

Warning and control

Lane Following Assist



0ST050203L

If the vehicle ahead or both lane markings are detected and your vehicle speed is below 200 km/h (120 mph), the green ( ) indicator light will illuminate on the cluster, and the function will help the vehicle stay in lane by controlling the steering wheel.

⚠ CAUTION

When the steering wheel is not controlled, the green ( ) indicator light will blink and change to white.

Hands-off warning



OJA050128L

If the driver takes their hands off the steering wheel for several seconds, the 'Keep hands on the steering wheel' warning message will appear and an audible warning will sound in stages.

- First stage: Warning message
- Second stage: Warning message (red steering wheel) and audible warning



OJA050146L

If the driver still does not have their hands on the steering wheel after the hands-off warning, the 'Lane Following Assist (LFA) canceled'

warning message will appear and Lane Following Assist will be automatically canceled.

⚠ WARNING

- Lane Following Assist does not operate at all times. It is the responsibility of the driver to safely steer the vehicle and to maintain the vehicle in its lane.
- The hands–off warning message may appear late depending on road conditions. Always have your hands on the steering wheel while driving.
- If the steering wheel is held very lightly the hands–off warning message may appear because the function may not recognize that the driver has their hands on the steering wheel.
- If you attach objects to the steering wheel, the hands-off warning may not work properly.

✻ NOTICE

- For more details on setting the functions in the infotainment function, refer to "LCD display (for Type B cluster)" on page 4-68.
- When both lane markings are detected, the lane lines on the cluster will change from gray to white.

Lane undetected



OST050156L

Lane detected



OST050159L

- If lane markings are not detected, steering wheel control by Lane Following Assist can be limited depending on whether a vehicle is in front or the driving conditions of the vehicle.
- Even though the steering is assisted by Lane Following Assist, the driver may control the steering wheel.
- The steering wheel may feel heavier when the steering wheel is assisted by the function than when it is not.

Function malfunction and limitations

Function malfunction

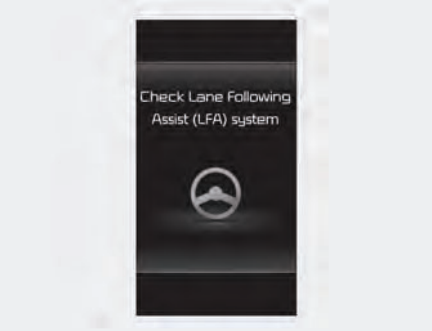

OJA050138L

When Lane Following Assist is not working properly, the 'Check Lane Following Assist (LFA) system' warning message will appear on the cluster. If this occurs, have the system checked by a professional workshop. Kia recommends to visit an authorized Kia dealer/service partner.

⚠ WARNING

For more details on the function precautions, refer to "Lane Keeping Assist (LKA) (if equipped)" on page 5-81.

Limitations of the function

For more details on “Limitations of the function”, refer to "Lane Keeping Assist (LKA) (if equipped)" on page 5-81.

Rear Cross-Traffic Collision Warning (RCCW) (if equipped)

Rear Cross-Traffic Collision Warning Assist is designed to detect vehicles approaching from the left and right side while your vehicle is reversing, and warns the driver that a collision is imminent with a warning message and an audible warning.

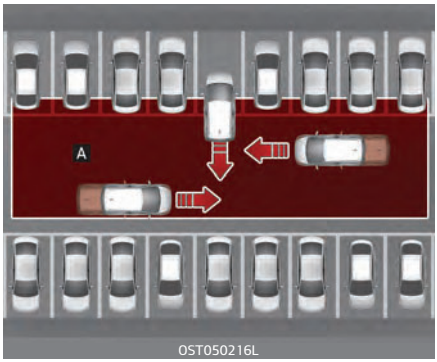

OST050216L

[A]: Rear Cross-Traffic Collision Warning operating range

⚠ CAUTION

The time of warning may vary depending on vehicle speed of the approaching vehicle.

✻ NOTICE

In the following text, Rear Cross-Traffic Collision Warning will be referred as Rear Cross-Traffic Safety.

Detecting sensor

Rear corner radar



Refer to the picture above for the detailed location of the detecting sensor.

⚠ CAUTION

For more details on the precautions of the rear corner radar, refer to "Blind-Spot Collision Warning (BCW) (if equipped)" on page 5-88.

Function settings



Rear Cross-Traffic Safety

With the ignition switch or ENGINE START/STOP button in the ON position, select 'Driver Assistance → Parking Safety → Rear Cross-Traffic Safety' from the Settings menu to turn on Rear Cross-Traffic Safety and deselect to turn off the function.

⚠ WARNING

When the engine is restarted, Rear Cross-Traffic Safety will always turn on. However, if 'Off' is selected after the engine is restarted, the driver should always be aware of the surroundings and drive safely.

Warning timing



With the ignition switch or ENGINE START/STOP button in the ON position, select 'Driver Assistance → Warning Timing' from the Settings menu to change the initial warning

activation time for Rear Cross-Traffic Safety.

When the vehicle is first delivered, warning timing is set to 'Normal' If you change the warning timing, the warning time of other Driver Assist function may change.

⚠ CAUTION

- The setting of the Warning Timing applies to all functions of Rear Cross-Traffic Safety.
- Even though 'Normal' is selected for warning timing, if the vehicles from the left and right side approaches at high speed, the initial warning activation time may seem late.
- Select 'Late' for warning timing when traffic is light and when driving speed is slow.

✻ NOTICE

If the ignition switch or ENGINE START/STOP button is changed to the ON position, Warning Timing will maintain the last setting.

Function operation

Function warning

Rear Cross-Traffic Safety will warn the driver when a collision is imminent.

Collision warning



To warn the driver of an approaching vehicle from the rear left/right side of your vehicle, the outside rearview mirror will blink and a warning will appear on the cluster. At the same time, an audible warning will sound and the steering wheel will vibrate. If Rear View Monitor is operating, a warning will also appear on the infotainment screen.

The function will operate when the following conditions are satisfied:

- Your vehicle gear is shifted to R (Reverse)
- Your vehicle speed is below 8 km/h (5 mph)
- The approaching vehicle is within approximately 25 m (82 feet) from the left and right side of your vehicle
- The speed of the vehicle approaching from the left and right is above 5 km/h (3 mph)

✻ NOTICE

If the operating conditions are satisfied, there will be a warning whenever the vehicle approaches from the left or right side even though your vehicle speed is 0 km/h (0 mph).

⚠ WARNING

- Take the following precautions when using Rear Cross-Traffic Safety:
- For your safety, change the Settings after parking the vehicle at a safe location.
- If any other function's warning message is displayed or audible warning is generated, Rear Cross-Traffic Safety warning message may not be displayed and audible warning may not be generated.
- You may not hear the warning sound of Rear Cross-Traffic Safety if the surrounding is noisy.
- Rear Cross-Traffic Safety may warn the driver late or may not warn the driver depending on the road and driving conditions.
- The driver should hold the responsibility to control the vehicle. Do not solely depend on Rear Cross-Traffic Safety. Rather, maintain a safe braking distance, and if necessary, depress the brake pedal to reduce driving speed or to stop the vehicle.

Function malfunction and limitations

Function malfunction



OJA050147L

When Rear Cross-Traffic Safety is not working properly, the 'Check Rear Cross-Traffic Safety system' warning message will appear on the cluster, and the function will turn off automatically, or the function will be limited. In this case, have your vehicle inspected by a professional workshop. Kia recommends to contact an authorized Kia dealer/service partner.



OJA050086L

When the outside rearview mirror warning light is not working properly, the 'Check side view mirror warning light' warning message will appear on the cluster. In this case, have your vehicle inspected by a professional workshop. Kia recommends to contact an authorized Kia dealer/service partner.

Function disabled



OJA050148L

When the rear bumper around the rear-side radar or sensor is covered with foreign matters, such as snow or rain, or installing a trailer or carrier, it can reduce the detecting performance and temporarily limit or disable Rear Cross-Traffic Safety.

If this occurs, the 'Rear Cross-Traffic Safety disabled. Radar blocked' warning message will appear on the cluster.

The function will operate normally when such foreign matters or trailer, etc. is removed.

If the function does not operate normally after it is removed, In this case, have your vehicle inspected by a professional workshop. Kia recommends to contact an authorized Kia dealer/service partner.

⚠ WARNING

- Even though the warning message does not appear on the cluster, Rear Cross-Traffic Safety may not properly operate.
- Rear Cross-Traffic Safety may not properly operate in an area (e.g. open terrain), where any substance are not detected after turning ON the engine.

⚠ CAUTION

Turn off Rear Cross-Traffic Safety to install a trailer, carrier, etc., or remove the trailer, carrier, etc. to use Rear Cross-Traffic Safety.

Limitations of the function

Rear Cross-Traffic Safety may not operate normally, or the function may operate unexpectedly under the following circumstances:

- Departing from where trees or grass is overgrown
- Departing from where roads are wet
- Speed of the approaching vehicle is fast or slow

⚠ CAUTION

For more details on the limitations of the rear corner radar, refer to "Blind-Spot Collision Warning (BCW) (if equipped)" on page 5-88.

⚠ WARNING

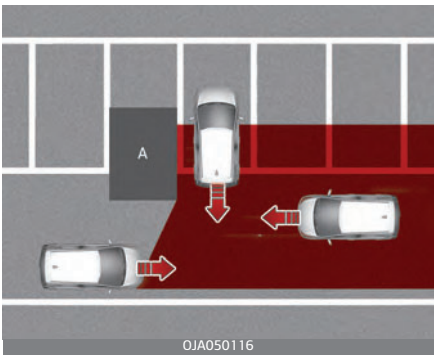

[A]: Structure

- Driving near a vehicle or structure

Rear Cross-Traffic Safety may be limited when driving near a vehicle or structure, and may not detect the vehicle approaching from the left or right. If this occurs, the function may not warn the driver when necessary.

Always check your surroundings while backing up.

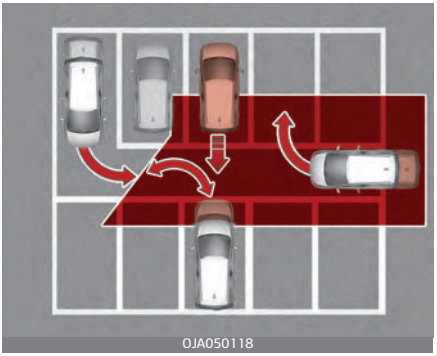

- When the vehicle is in a complex parking environment

Rear Cross-Traffic Safety may detect vehicles which are parking or pulling out near your vehicle (e.g. a vehicle leaving beside your vehicle, a vehicle parking or pulling out in the rear area, a vehicle approaching your vehicle making a turn, etc.). If this occurs, the function may unnecessarily warn the driver.

Always check your surroundings while backing up.

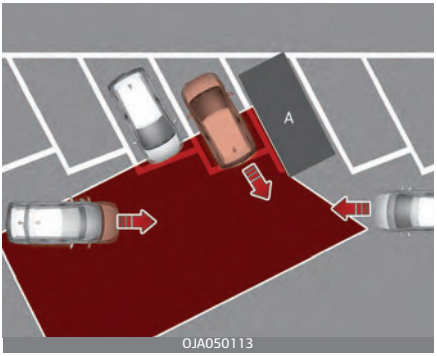

[A]: Vehicle

- When the vehicle is parked diagonally

Rear Cross-Traffic Safety may be limited when backing up diagonally, and may not detect the vehicle approaching from the left or right. If this occurs, the function may not warn the driver when necessary.

Always check your surroundings while backing up.

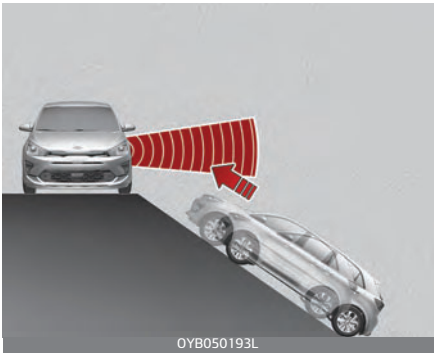

- When the vehicle is on or near a slope

Rear Cross-Traffic Safety may be limited when the vehicle is on a uphill or downhill slope, or near it, and may not detect the vehicle approaching from the left or right. If this occurs, the function may not warn the driver when necessary.

Always check your surroundings while backing up.

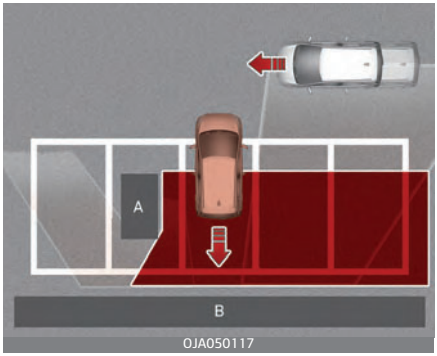

[A]: Structure, [B]: Wall

- Pulling into the parking space where there is a structure

Rear Cross-Traffic Safety may detect vehicles passing by in front of you when parking backwards into a parking space with a wall or structure in the rear or side area. If this occurs, the function may unnecessarily warn the driver.

Always check your surroundings while backing up.

When the vehicle is parked rearward

Rear Cross-Traffic Safety may detect vehicles passing by behind you when parking backwards into a parking space. If this occurs, the function may unnecessarily warn the driver.

Always check your surroundings while backing up.

⚠ WARNING

- When you are towing a trailer or another vehicle, we recommend that Rear Cross-Traffic Safety is turned off due to safety reasons.
- Rear Cross-Traffic Safety may not operate normally if interfered by strong electromagnetic waves.
- Rear Cross-Traffic Safety may not operate for 15 seconds after the vehicle is started, or the rear corner radars are initialized.

Rear Cross-Traffic Collision-Avoidance Assist (RCCA) (if equipped)

Rear Cross-Traffic Collision-Avoidance Assist is designed to detect vehicles approaching from the left and right side while your vehicle is reversing, and warns the driver that a collision is imminent with a warning message and an audible warning. Also, to help prevent collision braking assist is applied.

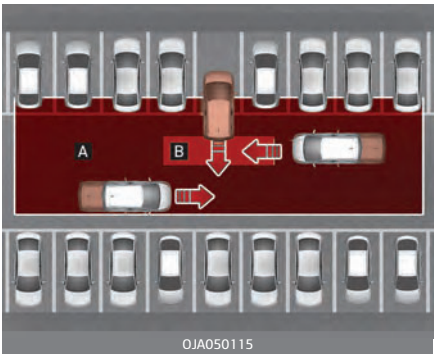

[A]: Rear Cross-Traffic Collision Warning operating range

[B]: Rear Cross-Traffic Collision-Avoidance Assist operating range

⚠ CAUTION

The time of warning may vary depending on vehicle speed of the approaching vehicle.

✻ NOTICE

In the following text, Rear Cross-Traffic Collision Warning and Rear Cross-Traffic Collision-Avoidance Assist will be referred as Rear Cross-Traffic Safety.

Detecting sensor

Rear corner radar



Refer to the picture above for the detailed location of the detecting sensor.

⚠ CAUTION

For more details on the precautions of the rear corner radar, refer to "Blind-Spot Collision Warning (BCW) (if equipped)" on page 5-88.

Function settings

Setting functions for the system



Rear Cross-Traffic Safety

With the ignition switch or ENGINE START/STOP button in the ON position, select 'Driver Assistance → Parking Safety → Rear Cross-Traffic Safety' from the Settings menu to turn on Rear Cross-Traffic Safety and deselect to turn off the function.

⚠ WARNING

When the engine is restarted, rear Cross-Traffic Safety will always turn on. However, if 'Off' is selected after the engine is restarted, the driver should always be aware of the surroundings and drive safely.

NOTICE

- Settings for Rear Cross-Traffic Safety include Rear Cross-Traffic Collision Warning and Rear Cross-Traffic Collision-Avoidance Assist.
- If the ignition switch or ENGINE START/STOP button is changed to the ON position, rear Cross-Traffic Safety will always turn on.

Warning Timing



OJA050141L

With the ignition switch or ENGINE START/STOP button in the ON position, select 'Driver Assistance → Warning Timing' from the Settings menu to change the initial warning activation time for Rear Cross-Traffic Safety.

When the vehicle is first delivered, warning timing is set to Normal. If you change the warning timing, the warning time of other Driver Assist functions may change.

Always be aware before changing the warning timing.

Function operation

Function warning and control

Rear Cross-Traffic Safety will warns and control the vehicle depending on collision level: 'Collision warning', 'Emergency braking' and 'Stopping vehicle and ending brake control'.

Collision warning



OYB050160L

Left



OYB050204L

Right



OYB050205L

- To warn the driver of an approaching vehicle from the rear left/right side of your vehicle, the warning light on the outside rear-view mirror will blink and a warning will appear on the cluster. At the same time, an audible warning will sound. If Rear View Monitor is operating, a warning will also appear on the infotainment system screen. (if equipped)
- The function will operate when the following conditions are satisfied:
  - Your vehicle gear is shifted to R (Reverse)
  - Your vehicle speed is below 8 km/h (5 mph)
  - The approaching vehicle is within approximately 25 m from the left and right side of your vehicle
  - The speed of the vehicle approaching from the left and right is above 5 km/h (3 mph)

✻ NOTICE

If the operating conditions are satisfied, there will be a warning whenever the vehicle approaches from the left or right side even though your vehicle speed is 0 km/h (0 mph).

Emergency Braking



OYB050160L

Left



OYB050209L

Right



OYB050206L

- Your vehicle, the warning light on the outside rearview mirror will blink and a warning message will appear on the cluster. At the same time, an audible warning will sound. If Rear View Monitor is operating, a warning will also appear on the infotainment system screen.
- The function will operate when the following conditions are satisfied:
  - Your vehicle gear is shifted to R (Reverse)
  - Your vehicle speed is below 8 km/h (5 mph)
  - The approaching vehicle is within approximately 1.5 m from the left and right side of your vehicle
  - The speed of the vehicle approaching from the left and right is above 5 km/h (3 mph)
  - Emergency braking will be assisted to help prevent collision with approaching vehicles from the left and right.

⚠ WARNING

Brake control will end when:

- The approaching vehicle is out of the detecting range
- The approaching vehicle passes behind your vehicle
- The approaching vehicle does not drive toward your vehicle
- The approaching vehicle speed slows down
- The driver depresses the brake pedal with sufficient power

Stopping vehicle and ending brake control



OST050214L

- When the vehicle is stopped due to emergency braking, the 'Drive carefully' warning message will appear on the cluster.
- For your safety, the driver should depress the brake pedal immediately and check the surroundings.

- Brake control will end after the vehicle is stopped by emergency braking for approximately 2 seconds.
- During emergency braking, braking control by the function will automatically cancel when the driver excessively depresses the brake pedal.

⚠ WARNING

- For your safety, change the Settings after parking the vehicle at a safe location.
- If any other function's warning message is displayed or audible warning is generated, Rear Cross-Traffic Safety warning message may not be displayed and audible warning may not be generated.
- You may not hear the warning sound of Rear Cross-Traffic Safety if the surrounding is noisy.
- Rear Cross-Traffic Safety may not operate if the driver applies the brake pedal to avoid collision.
- During Rear Cross-Traffic Safety operation, the vehicle may stop suddenly injuring passengers and shifting loose objects. Always have the seat belt on and keep loose objects secured.
- Even if there is a problem with Rear Cross-Traffic Safety, the vehicle's basic braking performance will operate normally.
- During emergency braking, braking control by the function will automatically cancel when the driver excessively depresses the accelerator pedal.
- Rear Cross-Traffic Safety does not operate in all situations or cannot avoid all collisions.
- Blind-Spot Safety system may warn the driver late or may not warn the driver depending on the road and driving conditions.
- The driver should hold the responsibility to control the vehicle. Do not solely depend on Rear Cross-Traffic Safety. Rather, maintain a safe braking distance, and if necessary, depress the brake pedal to reduce driving speed or to stop the vehicle.
- Never deliberately operate Rear Cross-Traffic Safety on people, animal, objects, etc. It may cause serious injury or death.

⚠ CAUTION

- The brake control may not operate properly depending on the status of ESC (Electronic Stability Control).
- There will only be a warning when:
  - ESC (Electronic Stability Control) warning light is on

- ESC (Electronic Stability Control) is engaged in a different function

NOTICE

- The driver must immediately depress the brake pedal and check vehicle surroundings.
- Brake control will end when the driver depresses the brake pedal with sufficient power.
- After shifting the gear to R (Reverse), braking control will operate once for left and right vehicle approach.

Function malfunction and limitations

Function malfunction

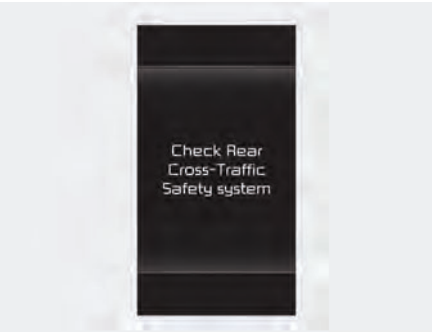

OJA050147L

When Rear Cross-Traffic Safety is not working properly, the 'Check Rear Cross-Traffic Safety system' warning message will appear on the cluster, and the function will turn off automatically or the function will be limited. In this case, have your vehicle inspected by a professional workshop. Kia recommends to contact an authorized Kia dealer/service partner.



OJA050086L

When the outside rearview mirror warning light is not working properly, the 'Check side view mirror warning light' warning message will appear on the cluster. In this case, have your vehicle inspected by a professional workshop. Kia recommends to contact an authorized Kia dealer/service partner.

Function disabled

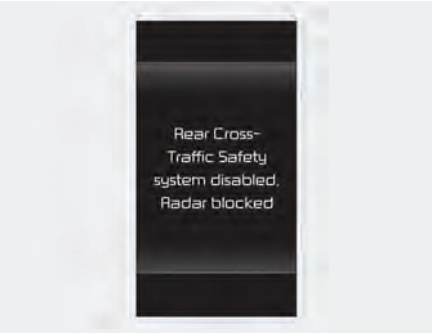

0JA050148L

When the rear bumper around the rear-side radar or sensor is covered with foreign matters, such as snow or rain, or installing a trailer or carrier, it can reduce the detecting performance and temporarily limit or disable Rear Cross-Traffic Safety.

If this occurs, the 'Rear Cross-Traffic Safety disabled. Radar blocked' warning message will appear on the cluster. It is not a malfunction.

The function will operate normally when such foreign matters or trailer, etc. is removed.

Always keep the rear view camera and rear ultrasonic sensors clean.

If the function does not operate normally after it is removed. In this case, have your vehicle inspected by a professional workshop. Kia recommends to contact an authorized Kia dealer/service partner.

⚠ WARNING

- Even though the warning message does not appear on the cluster, Rear Cross-Traffic Safety may not properly operate.
- Rear Cross-Traffic Safety may not properly operate in an area (e.g. open terrain), where any substance are not detected after turning ON the engine.

⚠ CAUTION

Turn off Rear Cross-Traffic Safety to install a trailer, carrier, etc., and remove the trailer, carrier, etc. to use Rear Cross-Traffic Safety.

Limitations of the function

Rear Cross-Traffic Safety function may not operate normally, or the function may operate unexpectedly under the following circumstances:

- Departing from where trees or grass is overgrown
- Departing from where roads are wet
- Speed of the approaching vehicle is fast or slow

Braking control may not work, driver's attention is required in the following circumstances:

- The vehicle severely vibrates while driving over a bumpy road, uneven road or concrete patch

- Driving on a slippery surface due to snow, water puddle, ice, etc.
- The tire pressure is low or a tire is damaged
- The brake is reworked
- Remote Smart Parking Assist is operating

For more details on the limitations of the rear corner radar, refer to "Blind-Spot Collision Warning (BCW) (if equipped)" on page 5-88.

⚠ WARNING

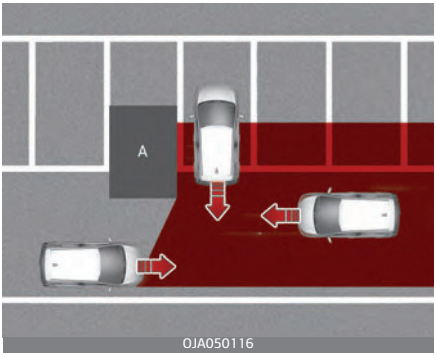

[A]: Structure

- Driving near a vehicle or structure

Rear Cross-Traffic Safety may be limited when driving near a vehicle or structure, and may not detect the vehicle approaching from the left or right. If this occurs, the function may not warn the driver or control the brakes when necessary.

Always check your surroundings while backing up.

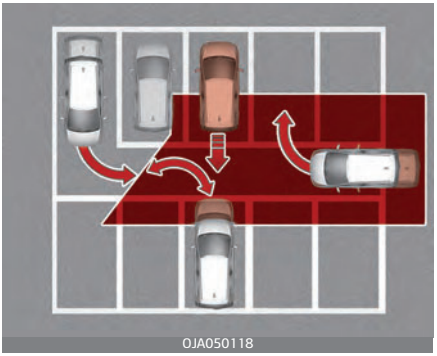

- When the vehicle is in a complex parking environment

Rear Cross-Traffic Safety may detect vehicles which are parking or pulling out near your vehicle (e.g. a vehicle leaving beside your vehicle, a vehicle parking or pulling out in the rear area, a vehicle approaching your vehicle making a turn, etc.). If this occurs, the function may unnecessarily warn the driver and control the brake.

Always check your surroundings while backing up.

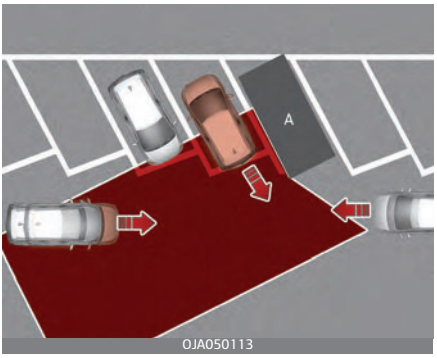

[A]: Vehicle

- When the vehicle is parked diagonally

Rear Cross-Traffic Safety may be limited when backing up diagonally, and may not detect the vehicle approaching from the left or right. If this occurs, the function may not warn the driver or control the brakes when necessary.

Always check your surroundings while backing up.

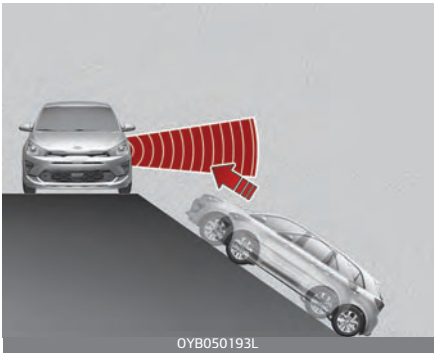

- When the vehicle is on or near a slope

Rear Cross-Traffic Safety may be limited when the vehicle is on a uphill or downhill slope, or near it, and may not detect the vehicle approaching from the left or right. If this occurs, the function may not warn the driver or control the brakes when necessary.

Always check your surroundings while backing up.

⚠ WARNING

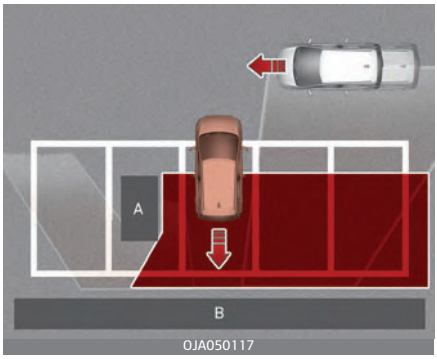

[A]: Structure, [B]: Wall

- Pulling into the parking space where there is a structure

Rear Cross-Traffic Safety may detect vehicles passing by in front of you when parking backwards into a parking space with a wall or structure in the rear or side area. If this occurs, the function may unnecessarily warn the driver and control the brake.

Always check your surroundings while backing up.

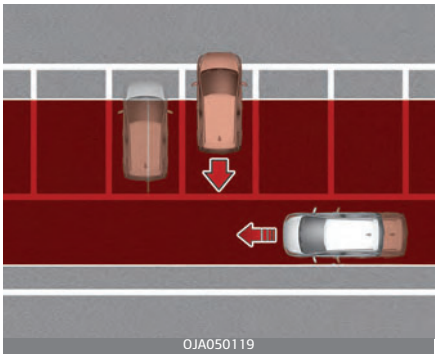

- When the vehicle is parked rearward

Rear Cross-Traffic Safety may detect vehicles passing by behind you when parking backwards into a parking space. If this occurs, the function may unnecessarily warn the driver and control the brake.

Always check your surroundings while backing up.

⚠ WARNING

- When you are towing a trailer or another vehicle, we recommend that Rear Cross-Traffic Safety is turned off due to safety reasons.
- Rear Cross-Traffic Safety may not operate normally if interfered by strong electromagnetic waves.
- Rear Cross-Traffic Safety may not operate for 3 seconds after the vehicle is started, or the rear corner radars are initialized.

Declaration of conformity (if equipped)

The radio frequency components (Rear Corner Radar) complies :

For United States and American territories, Micronesia, Dominican Republic, Honduras



OYB060040L

This device complies with Part 15 of the FCC Rules. Operation is subject to the following two conditions:
(1) this device may not cause harmful interference, and
(2) this device must accept any interference received, including interference that may cause undesired operation.

CAUTION TO USERS
Changes or modifications not expressly approved by the party responsible for compliance could void the user`s authority to operate the equipment.

OYB060041L

For Canada

Model: RS4
IC: 2694A – RS4

This device contains licence-exempt transmitter(s)/receiver(s) that comply with Innovation, Science and Economic Development Canada's licence-exempt RSS(s). Operation is subject to the following two conditions:
(1) This device may not cause interference.
(2) This device must accept any interference, including interference that may cause undesired operation of the device.;
Le présent appareil est conforme aux CNR d'Industrie Canada applicables aux appareils radio exempts de licence. L'exploitation est autorisée aux deux conditions suivantes:
(1) l'appareil ne doit pas produire de brouillage, et
(2) l'utilisateur de l'appareil doit accepter tout brouillage radioélectrique subi, même si le brouillage est susceptible d'en compromettre le fonctionnement.

This equipment complies with ISED radiation exposure limits set forth for an uncontrolled environment. This equipment should be installed and operated with minimum distance of 20 cm between the radiator and your body. This transmitter must not be co-located or operating in conjunction with any other antenna or transmitter.
Cet équipement est conforme aux limites d'exposition aux rayonnements ISED établies pour un environnement non contrôlé. Cet équipement doit être installé et utilisé avec un minimum de 20 cm de distance entre la source de rayonnement et votre corps. Ce transmetteur ne doit pas etre place au meme endroit ou utilise simultanement avec un autre transmetteur ou antenne.

OYB060042L

For Taiwan

電信法第 48 條，低功率電波輻射性電機管理辦法
第十二條
經型式認證合格之低功率射頻電機，非經許可，公司、商號或使用者均不得擅自變更頻率、加大功率或變更原設計之特性及功能。
第十四條
低功率射頻電機之使用不得影響飛航安全及干擾合法通信；經發現有干擾現象時，應立即停用，並改善至無干擾時方得繼續使用。
前項合法通信，指依電信法規定作業之無線電通信。低功率射頻電機須忍受合法通信或工業、科學及醫療用電波輻射性電機設備之干擾。

Article 12
Without permission, any company, firm or user shall not alter the frequency, increase the power, or change the characteristics and functions of the original design of the certified lower power frequency electric machinery.
Article 14
The application of low power frequency electric machineries shall not affect the navigation safety nor interface a legal communication, if an interference is found, the service will be suspended until improvement is made and the interference no longer exist.

OYB060043L

For Indonesia

54473/SDPPI/2018
6051

OYB060044L

For Malaysia

MCMC
CID F 15000578

OYB060045L

For Singapore

Complies with
IMDA Standards
DA 103238

OYB060046L

For Vietnam

Suntech VietNam Technology Company Limited
C017319017AF04A2

ICT

OYB060047L

For Brazil

ANATEL
03563-17-05364

OYB060048L

Este equipamento não tem direito à prote
ção contra interferência
prejudicial enão pode causar interferência
em sistemas devidamente autorizados

OYB060049L

For Mexico

Radar de corto alcance
RS4
Hella KGaA Hueck & Co
IFETEL: RLVHERS17-0286

"La operación de este equipo está sujeta a las siguientes dos condiciones:
(1) es posible que este equipo o dispositivo no cause interferencia perjudicial y (2) este equipo o dispositivo debe aceptar cualquier interferencia, incluyendo la que pueda causar su operación no deseada."

OYB060050L

For Japan

This device is granted pursuant to the Jap
anese Radio Law
under the grant ID n° : 204-750001
This device should not be modified (other
wise the granted designation number will
become invalid)

本製品は、電波法に基づく特定無線設備の技術基準適合証明などを受けております。 認証番号:
204-750001
本製品の改造は禁止されています。 (適合証明番号などが無効となります。)

OYB060051L

For Ukraine



OYB060052L

Цим HELLA GmbH & Co. KGaA заявляє, що радіотехнічне обладнання типу RS4 в ідповідає Технічному регламенту радіотехнічного обладнання та Директи ві 2014/53/ЄС.
Повний текст декларації про відповідніст ь доступний за адресою: www.hella.com/hyundai
Частотний діапазон: 24,05 – 24,25 ГГц
Потужність передачі: 20 дБм (макс.) EIRP

OYB060053L

For Jordan

TRC No. TRC/LPD/2017/63

OYB060054L

For Oman



OYB060055L

For United Arab Emirates



OYB060056L

For Botswana



OYB060057L

For Ghana

NCA Approved: 1R3-1M-7E1-0B7

OYB060058L

For Zambia



OYB060059L

For Jamaica

This product contains a Type Approved Module b
y Jamaica: SMA – "RS4"

OYB060060L

For Paraguay



OYB060061L

For Uzbekistan



ODL3059239L

For Mozambique

Approval No: N 1/R/SRA/2017
HELLA RS4

OYB060062L

Europe and countries subject to CE certification

In the user manual :

Hereby, Hella KgaA Hueck & Co. Declares that the radio equipment type RS4 is in compliance with Directive 2014/53/EU. The full text of the EU declaration of conformity is available at the following internet adress:
www.hella.com/hyundai

Technical information:
Frequency range: 24.05 ... 24.25 GHz
Transmission power: 20 dBm (maximum) EIRP

Manufacturer and Address:
Hella KGaA Hueck & Co.
Rixbecker Straße 75, 59552 Lippstadt, Germany

OYB060063L

Economical operation

Your vehicle's fuel economy depends mainly on your style of driving, where you drive and when you drive.

Each of these factors affects how many kilometers (miles) you can get from a liter (gallon) of fuel.To operate your vehicle as economically as possible, use the following driving suggestions to help save money in both fuel and repairs:

- Drive smoothly. Accelerate at a moderate rate. Don't make "jackrabbit" starts or full-throttle shifts and maintain a steady cruising speed. Don't race between stoplights. Try to adjust your speed to the traffic so you don't have to change speeds unnecessarily. Avoid heavy traffic whenever possible.
  Always maintain a safe distance from other vehicles so you can avoid unnecessary braking. This also reduces brake wear.
- Drive at a moderate speed. The faster you drive, the more fuel your vehicle uses. Driving at a moderate speed, especially on the highway, is one of the most effective ways to reduce fuel consumption.
- Don't "ride" the brake pedal. This can increase fuel consumption and also increase wear on these components. In addition, driving with your foot resting on the brake pedal may cause the brakes to overheat, which reduces their effectiveness and may lead to more serious consequences.
- Take care of your tires. Keep them inflated to the recommended pressure. Incorrect inflation, either too much or too little, results in unnecessary tire wear. Check the tire pressures at least once a month.
- Be sure that the wheels are aligned correctly. Improper alignment can result from hitting curbs or driving too fast over irregular surfaces. Poor alignment causes faster tire wear and may also result in other problems as well as greater fuel consumption.
- Keep your vehicle in good condition. For better fuel economy and reduced maintenance costs, maintain your vehicle in accordance with "Scheduled maintenance service" on page 7-11. If you drive your vehicle in severe conditions, more frequent maintenance is required (Refer to "Maintenance Under Severe Usage Conditions - For Gasoline Engine [For Europe (Except Russia)]" on page 7-17 and "Maintenance Under Severe Usage Conditions - For Gasoline Engine [Except Europe (Including Russia)]" on page 7-25 for details).
- Keep your car clean. For maximum service, your vehicle should

be kept clean and free of corrosive materials. It is especially important that mud, dirt, ice, etc. not be allowed to accumulate on the underside of the car. This extra weight can result in increased fuel consumption and also contribute to corrosion.

- Travel lightly. Don't carry unnecessary weight in your car. Weight reduces fuel economy.
- Don't let the engine idle longer than necessary. If you are waiting (and not in traffic), turn off your engine and restart only when you're ready to go.
- Remember, your vehicle does not require extended warm-up. After the engine has started, allow the engine to run for 10 to 20 seconds prior to placing the vehicle in gear. In very cold weather, however, give your engine a slightly longer warmup period.
- Don't "lug" or "over-rev" the engine. Lugging is driving too slowly in too high a gear resulting in the engine bucking. If this happens, shift to a lower gear. Over-revving is racing the engine beyond its safe limit. This can be avoided by shifting at the recommended speeds.
- Use your air conditioning sparingly. The air conditioning function is operated by engine power so your fuel economy is reduced when you use it.
- Open windows at high speeds can reduce fuel economy.
- Fuel economy is less in crosswinds and headwinds. To help offset some of this loss, slow down when driving in these conditions.

Keeping a vehicle in good operating condition is important both for economy and safety. Therefore, have the system serviced by a professional workshop.

Kia recommends to visit an authorized Kia dealer/service partner.

⚠ WARNING

Engine off during motion

Never turn the engine off to coast down hills or anytime the vehicle is in motion. The power steering and power brakes will not function properly without the engine running. Instead, keep the engine on and down shift to an appropriate gear for engine braking effect. In addition, turning off the ignition while driving could engage the steering wheel lock resulting in loss of vehicle steering which could cause serious injury or death.

Special driving conditions

Hazardous driving conditions

When hazardous driving conditions are encountered such as water, snow, ice, mud, sand, or similar hazards, follow these suggestions:

- Drive cautiously and allow extra distance for braking.
- Avoid sudden braking or steering.
- When braking with non-ABS brakes pump the brake pedal with a light up-and-down motion until the vehicle is stopped.

⚠ WARNING

ABS

Do not pump the brake pedal on a vehicle equipped with ABS.

- If stalled in snow, mud, or sand, use second gear. Accelerate slowly to avoid spinning the drive wheels.
- Use sand, rock salt, tire chains, or other non-slip material under the drive wheels to provide traction when stalled in ice, snow, or mud.

⚠ WARNING

Down shifting

Down shifting with an Automatic Transmission/Dual Clutch Transmission, while driving on slippery surfaces can cause an accident. The sudden change in tire speed could cause the tires to skid. Be careful when down shifting on slippery surfaces.

Reducing the risk of a rollover

This multi-purpose passenger vehicle is defined as a Crossover Utility Vehicle (CUV). Utility vehicles have a significantly higher rollover rate than other types of vehicles. CUV's have higher ground clearance and a narrower track to make them capable of performing in a wide variety of off-road applications. Specific design characteristics give them a highercenter of gravity than ordinary vehicles. An advantage of the higher ground clearance is a better view of the road, which allows you to anticipate problems. They are not designed for cornering at the same speeds as conventional passenger vehicles, any more than low-slung sports vehicles are designed to perform satisfactorily in off-road conditions. Due to this risk, driver and passengers are strongly recommended to buckle their seat belts. In a rollover crash, an unbelted person is significantly more likely to die than a person wearing a seat belt. There are steps that a driver can make to reduce the risk of a rollover. If at all possible, avoid sharp turns or abrupt maneuvers, do not load your roof rack with heavy cargo,

and never modify your vehicle in any way.

⚠ WARNING

Replacement tires

Always use the size and type of tires recommended in the tire section of the manual. Installation of variant tires can affect the safety and performance of your vehicle.

Rocking the vehicle

If it is necessary to rock the vehicle to free it from snow, sand, or mud, first turn the steering wheel right and left to clear the area around your front wheels. Then, shift back and forth between 1st (First) and R (Reverse) in vehicles equipped with a Manual Transmission/Intelligent Manual Transmission or R (Reverse) and any forward gear in vehicles equipped with an Automatic Transmission/Dual Clutch Transmission. Do not race the engine, and spin the wheels as little as possible. If you are still stuck after a few tries, have the vehicle pulled out by a tow vehicle to avoid engine overheating and possible damage to the transmission.

⚠ CAUTION

Prolonged rocking may cause engine over-heating, transmission damage or failure, and tire damage.

⚠ WARNING

Spinning tires

Do not spin the wheels, especially at speeds more than 56 km/h (35 mph). Spinning the wheels at high speeds when the vehicle is stationary could cause a tire to overheat which could result in tire damage that may injure bystanders.

✻ NOTICE

ESC (if equipped) should be turned OFF prior to rocking the vehicle.

⚠ WARNING

If your vehicle becomes stuck in snow, mud, sand, etc., then you may attempt to rock the vehicle free by moving it forward and backward. Do not attempt this procedure if people or objects are anywhere near the vehicle. During the rocking operation the vehicle may suddenly move forward of backward as it becomes unstuck, causing injury or damage to nearby people or objects.

Smooth cornering


OST050223L

Avoid braking or gear changing in corners, especially when roads are wet. Ideally, corners should always be taken under gentle acceleration. If you follow these suggestions, tire wear will be held to a minimum.

Driving at night


OST050224L

Because night driving presents more hazards than driving in the daylight, here are some important tips to remember:

- Slow down and keep more distance between you and other vehicles, as it may be more difficult to see at night, especially in areas where there may not be any street lights.
- Adjust your mirrors to reduce the glare from other driver's headlights.
- Keep your headlights clean and properly aimed on vehicles not equipped with the automatic headlight aiming feature. Dirty or improperly aimed headlights will make it much more difficult to see at night.
- Avoid staring directly at the headlights of oncoming vehicles. You could be temporarily blinded, and it will take several seconds for your eyes to readjust to the darkness.

Driving in the rain


OST050225L

Rain and wet roads can make driving dangerous, especially if you're not prepared for the slick pavement. Here are a few things to consider when driving in the rain:

- A heavy rainfall will make it harder to see and will increase the distance needed to stop your vehicle, so slow down.
- Keep your windshield wiping equipment in good shape. Replace your windshield wiper blades when they show signs of streaking or missing areas on the windshield.
- If your tires are not in good condition, making a quick stop on wet pavement can cause a skid and possibly lead to an accident. Be sure your tires are in good shape.
- Turn on your headlights to make it easier for others to see you.
- Driving too fast through large puddles can affect your brakes. If you must go through puddles, try to drive through them slowly.
- If you believe you may have gotten your brakes wet, apply them lightly while driving until normal braking operation returns.

Driving in flooded areas

Avoid driving through flooded areas unless you are sure the water is no higher than the bottom of the wheel hub. Drive through any water slowly. Allow adequate stopping distance because brake performance may be affected.

After driving through water, dry the brakes by gently applying them several times while the vehicle is moving slowly.

Driving off-road

Drive carefully off-road because your vehicle may be damaged by rocks of roots of trees. Become familiar with the off-road conditions where you are going to drive before you begin driving.

Highway driving

Tires



Adjust the tire inflation pressures to specification. Low tire inflation pressures will result in overheating and possible failure of the tires.

Avoid using worn or damaged tires which may result in reduced traction or tire failure.

✻ NOTICE

Never exceed the maximum tire inflation pressure shown on the tires.

⚠ WARNING

- Underinflated or overinflated tires can cause poor handling, loss of vehicle control, and sudden tire failure leading to accidents, injuries, and even death. Always check tires for proper inflation before driving. For proper tire pressures, refer to "Tires and wheels" on page 8-5.
- Driving on tires with no or insufficient tread is dangerous. Worn-out tires can result in loss of vehicle control, collisions, injury, and even death. Worn-out tires should be replaced as soon as possible and should never be used for driving. Always check the tire tread before driving your car. For further information and tread limits, refer to "Tires and wheels" on page 7-53.

Fuel, engine coolant and engine oil

High speed travel consumes more fuel than urban motoring. Do not forget to check both engine coolant and engine oil.

Drive belt

A loose or damaged drive belt may result in overheating of the engine.

Winter driving


OST070188L

More severe weather conditions of winter result in greater wear and other problems. To minimize winter driving problem, you should follow these suggestions:

* Snow tires and tire chains for the national language (Icelandic, Bulgarian) see the Appendix to chapter 9.

Snowy or icy conditions

To drive your vehicle in deep snow, it may be necessary to use snow tires or to install tire chains on your tires. If snow tires are needed, it is necessary to select tires equivalent in size and type of the original equipment tires. Failure to do so may adversely affect the safety and handling of your car. Furthermore, speeding, rapid acceleration, sudden brake applications, and sharp turns are potentially very hazardous practices.

During deceleration, use engine braking to the fullest extent. Sudden brake applications on snowy or icy roads may cause skids to occur. You need to keep sufficient distance between the vehicle in operation in front and your vehicle. Also, apply the brake gently. It should be noted that installing tire chains on the tire will provide a greater driving force, but will not prevent side skids.

✻ NOTICE

Tire chains are not legal in all countries. Check the country laws before fitting tire chains.

Snow tires

When mounting snow tires on a vehicle, make sure they are the same size as the original ones and use tires that are recommended in this manual. Using tires other than the recommended ones may cause abnormal noise while driving. The maximum weight that tires can withstand is different by vehicle so make sure you use the right-sized tires. Mount snow tires on all four wheels to balance your vehicle's handling in all weather conditions. Keep in mind that the traction provided by snow tires on dry roads may not be as high as your vehicle's original equipment tires.You should drive cautiously even when the

roads are clear. Check with the tire dealer for maximum speed recommendations.

*** Recommended tires**

185/65 R15	205/55 R17
Kumho (WINTERCRAFT WP71)	
Continental (CONTI PREMIUM CONTACT5, WINTER CONTACT TS850P)	

⚠ WARNING

Snow tire size

Snow tires should be equivalent in size and type to the vehicle's standard tires. Otherwise, the safety and handling of your vehicle may be adversely affected.

Do not install studded tires without first checking local, state and municipal regulations for possible restrictions against their use.

Tire chains



Since the sidewalls of radial tires are thinner, they can be damaged by mounting some types of snow chains on them. Therefore, the use of snow tires is recommended instead of snow chains. Do not mount tire chains on vehicles equipped with aluminum wheels; snow chains may cause damage to the wheels. If snow chains must be used, use wire-type chains with a thickness of less than 12 mm (0.47 in). Damage to your vehicle caused by improper snow chain use is not covered by your vehicle manufacturers warranty.

Install tire chains only on the front tires.

⚠ CAUTION

- Make sure the snow chains are the correct size and type for your tires. Incorrect snow chains can cause damage to the vehicle body and suspension and may not be covered by your vehicle manufacturer warranty. Also, the snow chain connecting hooks may be damaged from contacting vehicle components causing the snow chains to come loose from the tire. Make sure the snow chains are SAE class "S" certified.
- Always check chain installation for proper mounting after driving approximately 0.5 to 1 km (0.3 to 0.6 miles) to ensure safe mount-

ing. Retighten or remount the chains if they are loose.
- Even with the appropriate chain installed, do not make a full turn (turn the steering wheel fully to one side) when driving the vehicle. (If you are making a full turn, drive with the speed below 10km/h.)
- If your vehicle has 205/45R17 size tires, do not use tire chain; they can damage your vehicle (wheel, suspension and body).

Chain installation

When installing chains, follow the manufacturer's instructions and mount them as tightly as you can. Drive slowly with chains installed. If you hear the chains contacting the body or chassis, stop and tighten them. If they still make contact, slow down until it stops. Remove the chains as soon as you begin driving on cleared roads.

⚠ WARNING

Mounting chains

When mounting snow chains, park the vehicle on level ground away from traffic. Turn on the vehicle Hazard Warning flashers and place a triangular emergency warning device behind the vehicle if available. Always place the vehicle in P (Park), apply the parking brake and turn off the engine before installing snow chains.

⚠ WARNING

Tire chains

- The use of chains may adversely affect vehicle handling.
- Do not exceed 30 km/h (20 mph) or the chain manufacturer's recommended speed limit, whichever is lower.
- Drive carefully and avoid bumps, holes, sharp turns, and other road hazards, which may cause the vehicle to bounce.
- Avoid sharp turns or locked wheel braking.

⚠ CAUTION

- Chains that are the wrong size or improperly installed can damage your vehicle's brake lines, suspension, body and wheels.
- Stop driving and re tighten the chains any time you hear them hitting the vehicle.

Use high quality ethylene glycol coolant

Your vehicle is delivered with high quality ethylene glycol coolant in the cooling system. It is the only type of coolant that should be used because it helps prevent corrosion in the cooling system, lubricates the water pump and prevents freezing. Be sure to replace or replenish your

coolant refer to "Scheduled maintenance service" on page 7-11.

Before winter, have your coolant tested to assure that its freezing point is sufficient for the temperatures anticipated during the winter.

Check battery and cables

Winter puts additional burdens on the battery system. Visually inspect the battery and cables (Refer to "For best battery service" on page 7-49). Have the level of charge in your battery checked by a professional workshop. Kia recommends to visit an authorized Kia dealer/service partner.

Change to "winter weight" oil if necessary

In some climates it is recommended that a lower viscosity "winter weight" oil be used during cold weather. Refer to "Recommended lubricants and capacities" on page 8-8 for recommendations. If you aren't sure what weight oil you should use, Kia recommends to consult an authorized Kia dealer/service partner.

Check spark plugs and ignition system

Inspect your spark plugs as described in "Scheduled maintenance service" on page 7-11 and replace them if necessary. Also check all ignition wiring and components to be sure they are not cracked, worn or damaged in any way.

To keep locks from freezing

To keep the locks from freezing, squirt an approved deicer fluid or glycerine into the key opening. If a lock is covered with ice, squirt it with an approved deicing fluid to remove the ice. If the lock is frozen internally, you may be able to thaw it out by using a heated key. Handle the heated key with care to avoid injury.

Use approved window washer anti-freeze in system

To keep the water in the window washer system from freezing, add an approved window washer anti-freeze solution in accordance with instructions on the container. Window washer anti-freeze is available from an authorized Kia dealer/service partner and most auto parts outlets. Do not use engine coolant or other types of anti-freeze as these may damage the paint finish.

Don't let your parking brake freeze

Under some conditions your parking brake can freeze in the engaged position. This is most likely to happen when there is an accumulation of snow or ice around or near the rear brakes or if the brakes are wet. If there is a risk the parking brake may freeze, apply it only temporarily while you put the shift lever in P (Automatic Transmission/Dual Clutch Transmission) or in first or reverse gear (Manual Transmission/ Intelligent Manual Transmission) and block the rear wheels so the vehicle cannot roll. Then release the parking brake.

Don't let ice and snow accumulate underneath

Under some conditions, snow and ice can build up under the fenders and interfere with the steering. When driving in severe winter conditions where this may happen, you should periodically check underneath the car to be sure the movement of the front wheels and the steering components is not obstructed.

Carry emergency equipment

Depending on the severity of the weather, you should carry appropriate emergency equipment. Some of the items you may want to carry include tire chains, tow straps or chains, flashlight, emergency flares, sand, shovel, jumper cables, window scraper, gloves, ground cloth, coveralls, blanket, etc.

Trailer Towing (For Europe)

If you are considering towing with your car, you should first check with your country's Department of Motor Vehicles to determine their legal requirements.

Since laws vary the requirements for towing trailers, cars, or other types of vehicles or apparatus may differ. Kia recommends to ask an authorized Kia dealer/service partner.

⚠ WARNING

Towing a trailer

If you don't use the correct equipment and drive improperly, you can lose control when you pull a trailer. For example, if the trailer is too heavy, the brakes may not work well – or even at all. You and your passengers could be seriously or fatally injured. Pull a trailer only if you have followed all the steps in this section.

⚠ WARNING

Weight limits

Before towing, make sure the total trailer weight, gross combination weight, gross vehicle weight, gross axle weight and trailer tongue load are all within the limits.

⚠ WARNING

When you tow the trailer, make sure that you turn off ISG and LKA.

✻ NOTICE

For Europe

- The technically permissible maximum load on the rear axle(s) may be exceeded by not more than 15 % and the technically permissible maximum laden mass of the vehicle may be exceeded by not more than 10 % or 100 kg (220.4 lbs), whichever value is lower. In this case, do not exceed 100 km/h (62.1 mph) for vehicle of category M1 or 80 km/h (49.7 mph) for vehicle of category N1.
- When towing a trailer, the additional load imposed at the trailer coupling device may cause the rear tire maximum load ratings to be exceeded, but not by more than 15%. In such a case, do not exceed 100km/h, and the rear tire pressure should be at least 20 kPa(0.2 bar) above the tire pressure(s) as recommended for normal use (i.e. without a trailer attached).

⚠ CAUTION

Pulling a trailer improperly can damage your vehicle and result in costly repairs not covered by your warranty. To pull a trailer correctly, follow the advice in this section.

Your vehicle can tow a trailer. To identify what the vehicle trailering capacity is for your vehicle, you should read the information in "Weight of the trailer" that appears later in this section.

Remember that trailering is different than just driving your vehicle by itself. Trailering means changes in handling, durability, and fuel economy. Successful, safe trailering requires correct equipment, and it has to be used properly

This section contains many timetested, important trailering tips and safety rules. Many of these are important for your safety and that of your passengers. Please read this section carefully before you pull a trailer.

Load-pulling components such as the engine, transmission, wheel assemblies, and tires are forced to work harder against the load of the added weight. The engine is required to operate at relatively higher speeds and under greater loads. This additional burden generates extra heat. The trailer also considerably adds wind resistance, increasing pulling requirements.



OYB057089

✻ NOTICE

Location of trailer mounting

The mounting hole for hitches are located on both sides of the underbody behind the rear tires.

Hitches

It's important to have the correct hitch equipment. Crosswinds, large trucks going by, and rough roads are a few reasons why you'll need the right hitch. Here are some rules to follow:

- Do you have to make any holes in the body of your vehicle when you install a trailer hitch? If you do, then be sure to seal the holes later when you remove the hitch. If you don't seal them, deadly carbon monoxide (CO) from your

exhaust can get into your vehicle, as well as dirt and water.

- The bumpers on your vehicle are not intended for hitches. Do not attach rental hitches or other bumper-type hitches. Use only a frame-mounted hitch that does not attach to the bumper.
- Any part of the rear number plate or lighting devices of the vehicle must not be obscured by the mechanical coupling device.
  If the rear number plate and/or lighting devices can be obscured partially by any part of the mechanical coupling device, mechanical coupling devices that can not be easily removed or repositioned without use of any tools, except an easily operated (i.e. an effort not exceeding 20Nm) release key which is supplied by the manufacturer of the coupling device, are not permitted for use. Please note that the mechanical coupling device that is fitted and not in use must always be removed or repositioned if the rear number plate and/or rear lighting devices are obscured by any part of the mechanical coupling device.
- Kia trailer hitch accessary is available at an authorized Kia dealer/ service partner.

Safety chains

You should always attach chains between your vehicle and your trailer. Cross the safety chains under the tongue of the trailer so that the tongue will not drop to the road if it becomes separated from the hitch.

Instructions about safety chains may be provided by the hitch manufacturer or by the trailer manufacturer. Follow the manufacturer's recommendation for attaching safety chains. Always leave just enough slack so you can turn with your trailer. And, never allow safety chains drag on the ground.

Trailer brakes

If your trailer is equipped with a braking system, make sure it conforms to your country's regulations and that it is properly installed and operating correctly.

If your trailer weighs more than the maximum trailer weight without trailer brakes loaded, then it needs its own brakes and they must be adequate. Be sure to read and follow the instructions for the trailer brakes so you'll be able to install, adjust and maintain them properly.

- Don't tap into your vehicle's brake system.

⚠ WARNING

Trailer brakes

Do not use a trailer with its own brakes unless you are absolutely certain that you have properly set up the brake system. This is not a task for amateurs. Use an experienced, competent trailer shop for this work.

Driving with a trailer

Towing a trailer requires a certain amount of experience. Before setting out for the open road, you must get to know your trailer. Acquaint yourself with the feel of handling and braking with the added weight of the trailer. And always keep in mind that the vehicle you are driving is now a good deal longer and not nearly so responsive as your vehicle is by itself.

Before you start, check the trailer hitch and platform, safety chains, electrical connector(s), lights, tires and mirror adjustment. If the trailer has electric brakes, start your vehicle and trailer moving and then apply the trailer brake controller by hand to be sure the brakes are working.This lets you check your electrical connection at the same time.

During your trip, check occasionally to be sure that the load is secure, and that the lights and trailer brakes are still working.

Limitations of the function (For Smartstream G1.0 T-GDi)

Limitations to prevent overheating of trailer towing mode



OST050219L

If the above warning message appears during towing of the trailer, to prevent overheating of the engine/transmission, power may be limited or manual transmission may not be available.

- Pop-up condition
  - When at a certain grade or trailer is towed, the current torque value is higher than the set value. (Judged towing mode)
  - When atmospheric pressure is lower than certain conditons. (At high altitude)
  - When engine oil, coolant, and outside temperature are higher than the set value. (Judged engine room thermal damage)

- Pop-up release condition
  - When the set torque is lower than the entry condition.
  - When engine oil, coolant, and outside temperature are lower than the set value.
  - When the atmospheric pressure is higher than certain conditions.

Following distance

Stay at least twice as far behind the vehicle ahead as you would when driving your vehicle without a trailer. This can help you avoid situations that require heavy braking and sudden turns.

Passing

You'll need more passing distance up ahead when you're towing a trailer. And, because of the increased vehicle length, you'll need to go much farther beyond the passed vehicle before you can return to your lane.

Backing up

Hold the bottom of the steering wheel with one hand. Then, to move the trailer to the left, just move your hand to the left. To move the trailer to the right, move your hand to the right. Always back up slowly and, if possible, have someone guide you.

Making turns

When you're turning with a trailer, make wider turns than normal. Do this so your trailer won't strike soft shoulders, curbs, road signs, trees, or other objects. Avoid jerky or sudden maneuvers. Signal well in advance.

Turn signals when towing a trailer

When you tow a trailer, your vehicle has to have a different turn signal flasher and extra wiring. The green arrows on your instrument panel will flash whenever you signal a turn or lane change. Properly connected, the trailer lights will also flash to alert other drivers you're about to turn, change lanes, or stop.

When towing a trailer, the green arrows on your instrument panel will flash for turns even if the bulbs on the trailer are burned out. Thus, you may think drivers behind you are seeing your signals when, in fact, they are not. It's important to check occasionally to be sure the trailer bulbs are still working. You must also check the lights every time you disconnect and then reconnect the wires.

Do not connect a trailer lighting system directly to your vehicle's lighting system. Use only an approved trailer wiring harness.

Have yourself assisted by a professional workshop in installing the wiring harness.

Kia recommends to visit an authorized Kia dealer/service partner.

⚠ WARNING

Failure to use an approved trailer wiring harness could result in damage to the vehicle electrical system and/or personal injury.

Driving on grades

Reduce the speed and shift to a lower gear before you start down a long or steep downgrade. If you don't shift down, you might have to use your brakes so much that they would get hot and no longer operate efficiently.

On a long uphill grade, shift down and reduce your speed to around 70 km/h (45 mph) to reduce the possibility of engine and transmission overheating.

If your trailer weighs more than the maximum trailer weight without trailer brakes and you have an Automatic Transmission/Dual Clutch Transmission, you should drive in D (Drive) when towing a trailer.

Operating your vehicle in D (Drive) when towing a trailer will minimize heat build up and extend the life of your transmission.

⚠ CAUTION

- When towing a trailer on steep grades (in excess of 6%) pay close attention to the engine coolant temperature gauge to ensure the engine does not overheat. If the needle of the coolant temperature gauge moves across the dial towards "H (HOT) (or 130°C / 260°F)", pull over and stop as soon as it is safe to do so, and allow the engine to idle until it cools down. You may proceed once the engine has cooled sufficiently.
- You must decide the driving speed depending on trailer weight and uphill grade to reduce the possibility of engine and transmission overheating.
- When the engine is overheated (including the case that the engine coolant temperature gauge is no in "H"), the safe protection mode engages. In that case, driving speed can be limited automatically to protect the engine which means that driving speed would be decreased even if the acceleration pedal is pushed.
- For vehicles equipped with a Dual Clutch Transmission when towing a trailer on steep grades, the

clutch in the transmission could overheat.
When the clutch is overheated, the safe protection mode engages. If the safe protection mode engages, the gear position indicator on the cluster blinks with a chime sound.
At this time, a warning message will appear on the LCD display and driving may not be smooth. If you ignore this warning, the driving condition may become worse.
To return to normal driving condition, stop the vehicle on a flat road and apply the foot brake for a few minutes before driving off.

Parking on hills

Generally, if you have a trailer attached to your vehicle, you should not park your vehicle on a hill. People can be seriously or fatally injured, and both your vehicle and the trailer can be damaged if unexpectedly roll down hill.

⚠ WARNING

Parking on a hill

Parking your vehicle on a hill with a trailer attached could cause serious injury or death, should the trailer break loose.

However, if you ever have to park your trailer on a hill, here's how to do it:

1. Pull the vehicle into the parking space. Turn the steering wheel in the direction of the curb (right if headed down hill, left if headed up hill).
2. If the vehicle has a Manual Transmission/Intelligent Manual Transmission, place the car in neutral. If the vehicle has an Automatic Transmission/Dual Clutch Transmission, place the car in P (Park).
3. Set the parking brake and shut off the vehicle.
4. Place chocks under the trailer wheels on the down hill side of the wheels.
5. Start the vehicle, hold the brakes, shift to neutral, release the parking brake and slowly release the brakes until the trailer chocks absorb the load.
6. Reapply the brakes, reapply the parking brake and shift the vehicle to R (Reverse) for Manual Transmission/Intelligent Manual Transmission or P (Park) for Automatic

Transmission/Dual Clutch Transmission.
7. Shut off the vehicle and release the vehicle brakes but leave the parking brake set.

⚠ WARNING

Parking brake

It can be dangerous to get out of your vehicle if the parking brake is not firmly set.

If you have left the engine running, the vehicle can move suddenly. You or others could be seriously or fatally injured.

When you are ready to leave after parking on a hill

1. With the Manual Transmission/ Intelligent Manual Transmission in Neutral or Automatic Transmission/Dual Clutch Transmission in P (Park), apply your brakes and hold the brake pedal down while you:
   - Start your engine;
   - Shift into gear; and
   - Release the parking brake.
2. Slowly remove your foot from the brake pedal.
3. Drive slowly until the trailer is clear of the chocks.
4. Stop and have someone pick up and store the chocks.

Maintenance when trailer towing

Your vehicle will need service more often when you regularly pull a trailer. Important items to pay particular attention to include engine oil, Automatic Transmission fluid, axle lubricant and cooling system fluid. Brake condition is another important item to frequently check. Each item is covered in this manual, and the Index will help you find them quickly. If you're trailering, it's a good idea to review these sections before you start your trip.

Don't forget to also maintain your trailer and hitch. Follow the maintenance schedule that accompanied your trailer and check it periodically. Preferably, conduct the check at the start of each day's driving. Most importantly, all hitch nuts and bolts should be tight.

⚠ CAUTION

- Due to higher load during trailer usage, overheating might occur in hot days or during uphill driving. If the coolant gauge indicates overheating, switch off the A/C and stop the vehicle in a safe area to cool down the engine.
- Do not switch off the engine while the coolant gauge indicates overheating. (Keep the engine idle to cool down the engine)

- When towing, check the transmission fluid more frequently.
- If your vehicle is not equipped with an air conditioner, you should install a condenser fan to improve engine performance when towing a trailer.

If you do decide to pull a trailer

Here are some important points if you decide to pull a trailer:

- Consider using a sway control. You can ask a hitch dealer about sway control.
- Do not do any towing with your car during its first 2,000 km (1,200 miles) in order to allow the engine to properly break in. Failure to heed this caution may result in serious engine or transmission damage.
- When towing a trailer, Kia recommends that you consult an authorized Kia dealer/service partner on additional requirements such as a towing kit, etc.
- Always drive your vehicle at a moderate speed (less than 100 km/h (60 mph)).
- On a long uphill grade, do not exceed 70 km/h (45 mph) or the posted towing speed limit, whichever is lower.
- The chart contains important considerations that have to do with weight:

For Europe

Item		Smartstream G1.0 T-GDi		Smartstream G1.0 T-GDi 48V HEV		Smart-stream G1.2	(Gasoline engine) 1.4 MPI	
		6M/T	7DCT	6iMT	7DCT	5M/T	6M/T	6A/T
Maxi-mum trailer weight / kg (lbs.)	Without brake System	450 (992)	450 (992)	450 (992)	450 (992)	450 (992)	450 (992)	450 (992)
	With brake System	1,110 (2,447)	1,110 (2,447)	900 (1,984)	900 (1,984)	910 (2,006)	1,000 (2,205)	800 (1,764)
Maximum permissi-ble static vertical load on the coupling device / kg (lbs.)		75 (165)						
Recommended dis-tance from rear wheel center to coupling point / mm (inch)		805 (31.7)						

Weight of the trailer

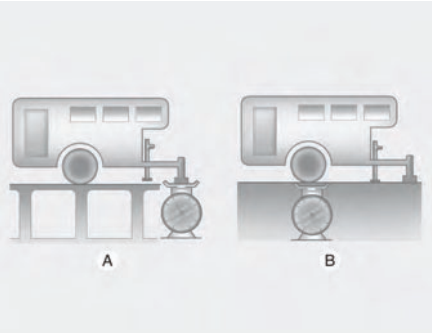

OUM076210L

A : Tongue Load

B : Total Trailer Weight

What is the maximum safe weight of a trailer? It should never weigh more than the maximum trailer weight with trailer brakes. But even that can be too heavy.

It depends on how you plan to use your trailer. For example, speed, altitude, road grades, outside temperature and how often your vehicle is used to pull a trailer are all important. The ideal trailer weight can also depend on any special equipment that you have on your vehicle.

Weight of the trailer tongue

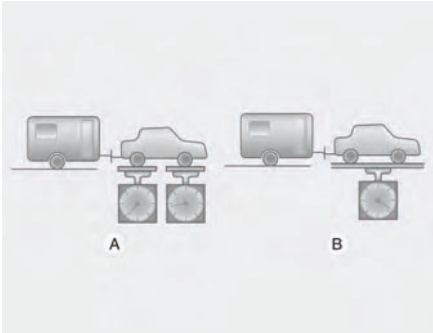

OUM076211L

A : Gross Axle Weight

B : Gross Vehicle Weight

The tongue load of any trailer is an important weight to measure because it affects the total gross vehicle weight (GVW) of your vehicle. This weight includes the curb weight of the vehicle, any cargo you may carry in it, and the people who will be riding in the vehicle. And if you tow a trailer, you must add the tongue load to the GVW because your vehicle will also be carrying that weight.

The trailer tongue should weigh a maximum of 10% of the total loaded trailer weight, within the limits of the maximum trailer tongue load permissible.

After you've loaded your trailer, weigh the trailer and then the tongue, separately, to see if the weights are proper. If they aren't, you may be able to correct them

simply by moving some items around in the trailer.

⚠ WARNING

Trailer

- Never load a trailer with more weight in the rear than in the front. The front should be loaded with approximately 60% of the total trailer load; the rear should be loaded with approximately 40% of the total trailer load.
- Never exceed the maximum weight limits of the trailer or trailer towing equipment. Improper loading can result in damage to your vehicle and/or personal injury. Check weights and loading at a commercial scale or highway patrol office equipped with scales.
- An improperly loaded trailer can cause loss of vehicle control.

Vehicle weight

This section will guide you in the proper loading of your vehicle, to keep your loaded vehicle weight within its design rating capability. Properly loading your vehicle will provide maximum return of the vehicle design performance. Before loading your vehicle, familiarize yourself with the following terms for determining your vehicle's weight ratings, from the vehicle's specifications and the certification label:

Base curb weight

This is the weight of the vehicle including a full tank of fuel and all standard equipment. It does not include passengers, cargo, or optional equipment.

Vehicle curb weight

This is the weight of your new vehicle when you picked it up from your dealer plus any after market equipment.

Cargo weight

This figure includes all weight added to the Base Curb Weight, including cargo and optional equipment.

GAW (Gross axle weight)

This is the total weight placed on each axle (front and rear) – including vehicle curb weight and all payload.

GAWR (Gross axle weight rating)

This is the maximum allowable weight that can be carried by a single axle (front or rear). These numbers are shown on the certification label.

The total load on each axle must never exceed its GAWR.

GVW (Gross vehicle weight)

This is the Base Curb Weight plus actual Cargo Weight plus passengers.

GVWR (Gross vehicle weight rating)

This is the maximum allowable weight of the fully loaded vehicle (including all options, equipment, passengers and cargo). The GVWR is shown on the certification label located on the driver's (or front passenger's) door sill.

Overloading

⚠ WARNING

Vehicle weight

The gross axle weight rating (GAWR) and the gross vehicle weight rating (GVWR) for your vehicle are on the certification label attached to the driver's (or front passenger's) door. Exceeding these ratings can cause an accident or vehicle damage. You can calculate the weight of your load by weighing the items (and people) before putting them in the vehicle. Be careful not to overload your vehicle.

What to do in an emergency 6

Road warning 6-3

• Hazard warning flasher 6-3

In case of an emergency while driving 6-4

• If the engine stalls at a crossroad or crossing 6-4
• If you have a flat tire while driving 6-4
• If engine stalls while driving 6-4

If the engine will not start 6-5

• If engine doesn't turn over or turns over slowly 6-5
• If engine turns over normally but does not start 6-5

Emergency starting 6-6

• Jump starting 6-6
• Push-starting 6-8

If the engine overheats 6-8

Tire Pressure Monitoring System (TPMS) 6-10

• System Overview 6-10
• TPMS Setting 6-10
• Indication of Low Tire Pressure 6-11
• Tire Pressure Monitoring System malfunction 6-13
• Reference : Indicator Light Status 6-14

If you have a flat tire (with spare tire) 6-14

• Jack and tools 6-14
• Removing and storing the spare tire 6-15
• Changing tires 6-16
• Jack label 6-22
• EC Declaration of Conformity for Jack 6-24

If you have a flat tire (with Tire Mobility Kit) 6-25

• Introduction 6-26
• Components of the Tire Mobility Kit (TMK) 6-27

6 What to do in an emergency

• Using the Tire Mobility Kit 6-28
• Distributing the sealant 6-29
• Checking the tire inflation pressure 6-30
• Notes on the safe use of the Tire Mobility Kit 6-30
• Technical Data 6-31
Towing 6-32
• Towing service 6-32
• Removable towing hook 6-33
• Emergency towing 6-33
Emergency Commodity 6-36

What to do in an emergency

Road warning

Hazard warning flasher

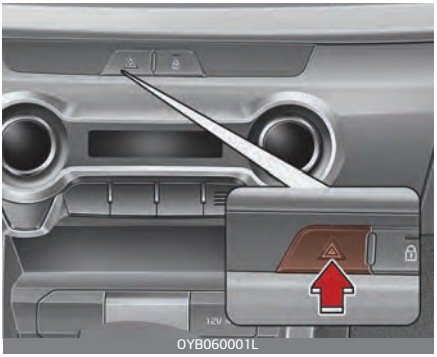

The hazard warning flasher serves as a warning to other drivers to exercise extreme caution when approaching, overtaking, or passing your vehicle.

It should be used whenever emergency repairs are being made or when the vehicle is stopped near the edge of a roadway.

Depress the flasher switch with the ignition switch in any position. The flasher switch is located in the center console switch panel. All turn signal lights will flash simultaneously.

- The hazard warning flasher operates whether your vehicle is running or not.
- The turn signals do not work when the hazard flasher is on.
- Care must be taken when using the hazard warning flasher while the vehicle is being towed.

In case of an emergency while driving

If the engine stalls at a crossroad or crossing

- If the engine stalls at a crossroad or crossing, set the shift lever in the N (Neutral) position and then push the vehicle to a safe place.
- If your vehicle has a manual transmission/intelligent manual transmission not equipped with a ignition lock switch, the vehicle can move forward by shifting to the 2 (second) or 3 (third) gear and then turning the starter without depressing the clutch pedal.

If you have a flat tire while driving

If a tire goes flat while you are driving:

1. Take your foot off the accelerator pedal and let the vehicle slow down while driving straight ahead. Do not apply the brakes immediately or attempt to pull off the road as this may cause a loss of control. When the vehicle has slowed down to such a speed that it is safe to do so, brake carefully and pull off the road. Drive off the road as far as possible and park on a firm level ground. If you are on a divided highway, do not park in the median area between the two traffic lanes.
2. When the vehicle is stopped, turn on your emergency hazard flashers, set the parking brake and put the transmission in P (automatic transmission/dual clutch transmission) or reverse (manual transmission/intelligent manual transmission).
3. Have all passengers get out of the vehicle. Be sure they all get out on the side of the vehicle that is away from traffic.
4. When changing a flat tire, follow the instruction provided later in this section.

If engine stalls while driving

1. Reduce your speed gradually, keeping a straight line. Move cautiously off the road to a safe place.
2. Turn on your emergency flashers.
3. Try to start the engine again. If your vehicle does not start, consult a professional workshop. Kia recommends to consult an authorized Kia dealer/service partner.

If the engine will not start

If engine doesn't turn over or turns over slowly

1. If your vehicle has an automatic transmission/dual clutch transmission, be sure the shift lever is in N (Neutral) or P (Park) and the emergency brake is set.
2. Check the battery connections to be sure they are clean and tight.
3. Turn on the interior light. If the light dims or goes out when you operate the starter, the battery is discharged.
4. Check the starter connections to be sure they are securely tightened.
5. Do not push or pull the vehicle to start it. See instructions for "Jump starting".

⚠ WARNING

If the engine will not start, do not push or pull the vehicle to start it. This could result in a collision or cause other damage. In addition, push or pull starting may cause the catalytic converter to be overloaded and create a fire hazard.

If engine turns over normally but does not start

1. Check the fuel level.
2. With the ignition switch in the LOCK position, check all connectors at the ignition coils and spark plugs. Reconnect any that may be disconnected or loose.
3. Check the fuel line in the engine compartment.
4. If the engine still does not start, call a professional workshop. Kia recommends to call an authorized Kia dealer/service partner.

Emergency starting

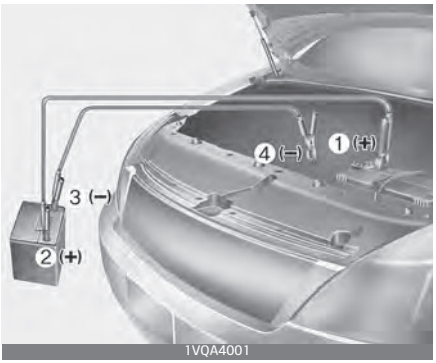

Connect cables in numerical order and disconnect in reverse order.

Jump starting

Jump starting can be dangerous if done incorrectly. Therefore, to avoid harm to yourself or damage to your vehicle or battery, follow the jump starting procedures. If in doubt, we strongly recommend that you have a competent technician or towing service jump start your vehicle.

⚠ CAUTION

Use only a 12-volt jumper system. You can damage a 12-volt starting motor, ignition system, and other electrical parts beyond repair by use of a 24- volt power supply (either two 12-volt batteries in series or a 24-volt motor generator set)

⚠ WARNING

Battery

Never attempt to check the electrolyte level of the battery as this may cause the battery to rupture or explode causing serious injury.

⚠ WARNING

Battery

- Keep all flames or sparks away from the battery. The battery produces hydrogen gas which may explode if exposed to flame or sparks.
  If these instructions are not followed exactly, serious personal injury and damage to the vehicle may occur! If you are not sure how to follow this procedure, seek qualified assistance. Automobile batteries contain sulfuric acid. This is poisonous and highly corrosive. When jump starting, wear protective glasses and be careful not to get acid on yourself, your clothing or on the vehicle.
- Do not attempt to jump start the vehicle if the discharged battery is frozen or if the electrolyte level is low; the battery may rupture or explode.
- Do not allow the (+) and (–) jumper cables to touch. It may cause sparks.

- The battery may rupture or explode when you jump start with a low or frozen battery.

Jump starting procedure

1. Make sure the booster battery is 12-volt and that its negative terminal is grounded.
2. If the booster battery is in another vehicle, do not allow the vehicles come in contact.
3. Turn off all unnecessary electrical loads.
4. Connect the jumper cables in the exact sequence shown in the illustration. First connect one end of a jumper cable to the positive terminal of the discharged battery (1), then connect the other end to the positive terminal on the booster battery (2).
   Proceed to connect one end of the other jumper cable to the negative terminal of the booster battery (3), then the other end to a solid, stationary, metallic point (for example, the engine lifting bracket) away from the battery (4). Do not connect it to or near any part that moves when the engine is cranked.
   Do not allow the jumper cables to contact anything except the correct battery terminals or the correct ground. Do not lean over the battery when making connections.

⚠ CAUTION

Battery cables

Do not connect the jumper cable from the negative terminal of the booster battery to the negative terminal of the discharged battery. This can cause the discharged battery to overheat and crack, releasing battery acid.

Make sure to connect one end of the jumper cable to the negative terminal of the booster battery, and the other end to a metallic point, far away from the battery.

5. Start the engine of the vehicle with the booster battery and let it run at 2,000 rpm, then start the engine of the vehicle with the discharged battery

If the cause of your battery discharging is not apparent, have the system checked by a professional workshop. Kia recommends to visit an authorized Kia dealer/service partner.

Push-starting

Your manual transmission/intelligent manual transmission-equipped vehicle should not be push-started because it might damage the emission control system.

Vehicles equipped with automatic transmission/dual clutch transmission cannot be push-started.

Follow the directions in this section for jump-starting.

⚠ WARNING

Never tow a vehicle to start it because the sudden surge forward when the engine starts could cause a collision with the tow vehicle.

If the engine overheats

If your temperature gauge indicates overheating, you will experience a loss of power, or hear loud pinging or knocking, the engine is probably too hot. If this happens, you should:

1. Pull off the road and stop as soon as it is safe to do so.
2. Place the shift lever in P (automatic transmission/dual clutch transmission) or neutral (manual transmission/intelligent manual transmission) and set the parking brake. If the air conditioning is on, turn it off.
3. If engine coolant is running out under the vehicle or steam is coming out from the hood, stop the engine. Do not open the hood until the coolant has stopped running or the steaming has stopped. If there is no visible loss of engine coolant and no steam, leave the engine running and check to be sure the engine cooling fan is operating. If the fan is not running, turn the engine off.
4. Check to see if the water pump drive belt is missing. If it is not missing, check to see that it is tight.
   If the drive belt seems to be satisfactory, check for coolant leaking from the radiator, hoses or under the vehicle. (If the air conditioning had been in use, it is nor-

mal for cold water to be draining from it when you stop).

⚠ WARNING

While the engine is running, keep hair, hands and clothing away from moving parts such as the fan and drive belts to prevent injury.

5. If the water pump drive belt is broken or engine coolant is leaking out, stop the engine immediately and call a professional workshop. Kia recommends to call an authorized Kia dealer/service partner.

⚠ WARNING

Do not remove the radiator cap when the engine is hot.This can allow coolant to blow out of the opening and cause serious burns.

6. If you cannot find the cause of the overheating, wait until the engine temperature has returned to normal.Then, if coolant has been lost, carefully add coolant to the reservoir to bring the fluid level in the reservoir up to the halfway mark.
7. Proceed with caution, keeping alert for further signs of overheating. If overheating happens again, call a professional workshop. Kia recommends to call an authorized Kia dealer/service partner.

⚠ CAUTION

- Serious loss of coolant indicates there is a leak in the cooling system. In this case, have the system checked by a professional workshop. Kia recommends to visit an authorized Kia dealer/service partner.
- When the engine overheats from low engine coolant, suddenly adding engine coolant may cause cracks in the engine. To prevent damage, add engine coolant slowly in small quantities.

Tire Pressure Monitoring System (TPMS) (if equipped)



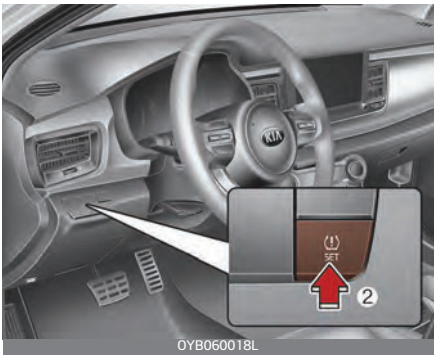

(1) Low tire pressure telltale

(2) TPMS SET switch

System Overview

The tire pressure monitoring system (TPMS) senses change in radius of the tire. If the tire pressure decreases below the recommended pressure, the system warning light will be illuminated.

For the system to function properly, it is the driver's responsibility to set the system by following accurate procedure and set current tire pressure.

The warning light will illuminate on the cluster when one or more of your tires is under-inflated after the TPMS is set.

The warning light will also illuminate to warn the driver of system malfunction.

Please refer to the above image (1) for further information.

TPMS Setting

The driver can set the TPMS by following procedures below:

1. Inflate all tires to the recommended pressure.
2. Start the engine, make sure the vehicle is not moving, and press the TPMS switch (2) left side on the driver's seat for over 3 seconds.
3. Check if the (⚠) warning indicator blinks for 4 seconds.
4. Check if following message appears on the cluster (if equipped).



OYB060020L

* If the warning light does not blink or the message does not pop up, perform the process again from 2).

For recommended tire pressure of this vehicle, refer to "Tires and wheels" on page 8-5 or the tire pressure label on the driver's door.

For proper function of the TPMS, the driver must set the system in following situations.

* Situation requiring TPMS setting

- If the tire or wheel is repaired or replaced
- If the tire or wheel is repositioned.
- If the tire pressure is adjusted.
- If the low pressure light is illuminated.
- If suspension or ABS has been replaced.

⚠ CAUTION

If the system is set without adjusting tire pressure, false alarm could occur or the telltale will not be displayed even though the vehicle is significantly under-inflated.

Make sure all tires are properly adjusted to the recommended pressure when setting.

If the system is not set even in required situations, false alarm could occur or the telltale will not be displayed even though the vehicle is significantly under-inflated.

The system will not be set if you press the SET switch (2) while driving. Make sure to stop the vehicle and press the switch (2) for over 3 seconds.

- Be sure the tire is cold before inflating the pressure.
  A cold tire means the vehicle has been sitting for 3 hours or driven within 1.6 km (1 mile).

Indication of Low Tire Pressure



OYB060021L

The (!) warning light will illuminate when an under-inflated tire is indicated. In certain types, the above

message might be displayed on the cluster.

If the warning light illuminates, reduce your speed, avoid hard cornering and rapid braking. Have your vehicle inspected by a professional workshop. Kia recommends to visit an authorized Kia dealer/service partner.

Check the pressure of all tires and inflate to the proper pressure according to procedures, and if required, replace or repair the tires.

If you cannot reach a close service station, stop the vehicle at a safe place, check all tires and operate the TPMS setting procedure. If you are unable to adjust the tire pressure, use the repair tools to repair or change to spare tire and contact a professional workshop.

Kia recommends to call an authorized Kia dealer/service partner.

You may not be able to identify low tire pressure visually. Use precise tools to measure and adjust tire pressure.
Please note that a tire that is hot due to prolonged driving, therefore will have high pressure. We recommend you to measure and adjust the tire pressure after the vehicle has driven for less than 1.6km (1 mile) within 3 hours.

⚠ CAUTION

- The indicator may remain illuminated after changing to a spare tire, because radius of spare tire is different. Be sure to change to a regular tire.
- For safe driving, please note that the TPMS is not a substitute for proper tire maintenance. It is the driver's responsibility to maintain correct tire pressure, and all tires should be checked monthly to maintain the recommended pressure.
- The warning light may illuminate if the system is not set in required situations.
- In cold weather, the low tire pressure warning light may illuminate even if the tire was adjusted to the proper pressure. It does not mean your TPMS in malfunctioning because the decreased temperature leads to a lowering of tire pressure. Check the tires and adjust to the recommended pressure.
- System performance may reduce in the following situations.
  - Improper system setting
  - Using tires on the market (Original tire recommended)
  - Driving on snowy, slippery, or unpaved roads
  - Hard cornering, rapid accelerating and braking repeatedly
  - Driving too slow or fast

  - If the vehicle is overloaded
  - If a spare tire or snow chain is installed
- When filling tires with more air, conditions to turn off the low tire pressure telltale may not be met. This is because a tire inflator has a margin of error in performance. The low tire pressure telltale will be turned off if the tire pressure is above the recommended tire inflation pressure.

⚠ WARNING

- Driving with an under-inflated tire causes the tire to overheat and lead to tire failure. It also reduces tire tread life, handling of the vehicle, braking ability, and fuel efficiency, causing instability of the vehicle. In this case, contact professional workshop to maintain proper tire pressure. Kia recommends to contact an authorized Kia dealer/service partner.
- Sudden damage to the tire caused by external factors may not be indicated immediately. If the vehicle is unstable, immediately remove your foot off the accelerator pedal, move the vehicle to a safe position for inspection.

Tire Pressure Monitoring System malfunction

The TPMS malfunction indicator will illuminate () after it blinks for approximately 1 minute when there is a problem with the Tire Pressure Monitoring System. This sequence will continue upon subsequent vehicle start-ups as long as the malfunction exists.

If the indicator remains illuminated or illuminates even after TPMS setting, have the system checked by a professional workshop. Kia recommends to visit an authorized Kia dealer/service partner.

⚠ WARNING

- If there is a malfunction with the TPMS, low tire pressure will not be indicated. In this case, have the system serviced by a professional workshop. Kia recommends to visit an authorized Kia dealer/service partner.
- If the system does not work due to TPMS removal or installation of related parts with different specification, it might be a problem when the vehicle is being regularly inspected.
- When repairing TPMS related parts, be sure to replace them to parts with original specification or those which satisfy the TPMS regulation.

– TPMS related parts : tire, wheel, ABS unit, suspension

⚠ WARNING

FOR EUROPE

Do not modify the vehicle. It may interfere with the TPMS function.

* All vehicles sold in the EUROPE market during below period must be equipped with TPMS.

- New model vehicle : Nov. 1, 2012 ~
- Current model vehicle : Nov. 1, 2014~(Based on vehicle registrations)

Reference : Indicator Light Status

Status	Symbol
Low Pressure	Illuminates
System Malfunction	Illuminates after blinking (70 seconds)
Setting	Turns off after blinking (4 seconds)

If you have a flat tire (with spare tire) (if equipped)

Jack and tools



The jack, jack handle, wheel lug nut wrench are stored in the luggage compartment.

Pull up the luggage box cover to reach this equipment.

1. Jack handle
2. Jack
3. Wheel lug nut wrench

Jacking instructions

The jack is provided for emergency tire changing only.

To prevent the jack from “rattling” while the vehicle is in motion, store it properly.

Follow jacking instructions to reduce the possibility of personal injury.

⚠ WARNING

Changing tires

- Never attempt vehicle repairs in the traffic lanes of a public road or highway.
- Always move the vehicle completely off the road and onto the shoulder before trying to change a tire. The jack should be used on firm level ground. If you cannot find a firm level place off the road, call a towing service company for assistance.
- Be sure to use the correct front and rear jacking positions on the vehicle; never use the bumpers or any other part of the vehicle for jacking support.
- The vehicle can roll off the jack causing serious injury or death.
- Do not get under a vehicle that is supported by a jack.
- Do not start or run the engine while the vehicle is on the jack.
- Do not allow anyone remain in the vehicle while it is on the jack.
- Make sure any children present are in a secure place away from the road and from the vehicle to be raised with the jack.

Removing and storing the spare tire


OYB060034L

Turn the tire hold-down wing bolt counterclockwise.

Store the tire in the reverse order of removal.

To prevent the spare tire and tools from “rattling” while the vehicle is in motion, store them properly.



OYB060035L

If it is hard to loosen the tire hold-down wing bolt by hand, you can loosen it easily using the jack handle.

1. Put the jack handle (1) inside of the tire hold-down wing bolt.

2. Turn the tire hold-down wing bolt counterclockwise with the jack handle.

⚠ WARNING

Ensure the spare tire retainer is properly aligned with the center of the spare tire to prevent the spare tire from "rattling".

Otherwise, it may cause the spare tire to fall off the carrier and lead to an accident.

Changing tires

1. Park on a level surface and apply the parking brake firmly.
2. Shift the shift lever into R (Reverse) with manual transmission/intelligent manual transmission or P (Park) with automatic transmission/dual clutch transmission.
3. Activate the hazard warning flasher.



OYB060037L

4. Remove the wheel lug nut wrench, jack, jack handle, and spare tire from the vehicle.



OST060064L

5. Block both the front and rear of wheel that is diagonally opposite the jack position.

⚠ WARNING

Changing a tire

- To prevent vehicle movement while changing a tire, always set the parking brake fully, and always block the wheel diagonally opposite the wheel being changed.
- We recommend that the wheels of the vehicle be chocked, and that no person remain in a vehicle that is being jacked.

6. Loosen the wheel lug nuts counterclockwise one turn each, but do not remove any nut until the tire has been raised off the ground.



OYB060004L

7. Place the jack at the front (1) or rear (2) jacking position closest to the tire you are changing. Place the jack at the designated locations under the frame. The jacking positions are plates welded to the frame with two tabs and a raised dot to index with the jack.

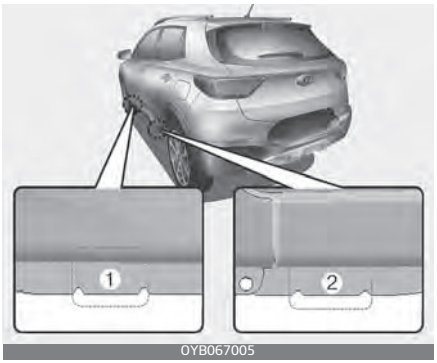

OYB067005

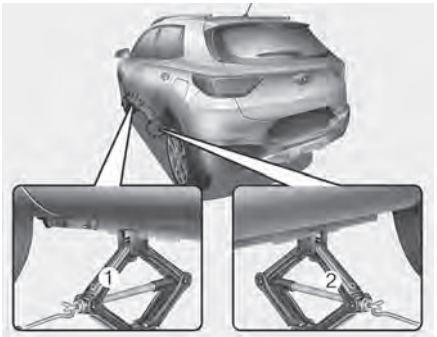

OYB067006

⚠ WARNING

Jack location

To reduce the possibility of injury, be sure to use only the jack provided with the vehicle and in the correct jack position; never use any other part of the vehicle for jack support.

8. Insert the jack handle into the jack and turn it clockwise, raising the vehicle until the tire just clears the ground. This measurement is approximately 30 mm (1.2 in). Before removing the wheel lug nuts, make sure the vehicle is stable and that there is no chance for movement or slippage.


OYB060007L

9. Loosen the wheel nuts and remove them with your fingers. Slide the wheel off the studs and lay it flat so it cannot roll away.
   To put the wheel on the hub, pick up the spare tire, line up the holes with the studs and slide the wheel onto them.
   If this is difficult, tip the wheel slightly and get the top hole in the wheel lined up with the top stud. Then jiggle the wheel back and forth until the wheel can be slid over the other studs.

⚠ WARNING

Wheels may have sharp edges. Handle them carefully to avoid possible severe injury. Before putting the wheel into place, be sure that there is nothing on the hub or wheel (such as mud, tar, gravel, etc.) that interferes with the wheel from fitting solidly against the hub.

If there is, remove it. If there is not good contact on the mounting surface between the wheel and hub, the wheel nuts could come loose and cause the loss of a wheel. Loss of a wheel may result in loss of control of the vehicle. This may cause serious injury or death.

10. To reinstall the wheel, hold it on the studs, put the wheel nuts on the studs and tighten them finger tight. Jiggle the tire to be sure it is completely seated, then tighten the nuts as much as possible with your fingers again.
11. Lower the vehicle to the ground by turning the wheel nut wrench counterclockwise.



OYB060008L

Then position the wrench as shown in the drawing and tighten the wheel nuts. Be sure the socket is seated completely over the nut. Do not stand on the wrench handle or use an extension pipe over the wrench handle. Go around the wheel tightening every other nut until they are all tight. Then double-check each nut for tightness. After

changing wheels, have the system checked by a professional workshop. Kia recommends to visit an authorized Kia dealer/service partner.

Wheel nut tightening torque:

Steel wheel & aluminum alloy wheel: 11~13 kgf·m (79~94 lbf·ft)

If you have a tire gauge, remove the valve cap and check the air pressure. If the pressure is lower than recommended, drive slowly to the nearest service station and inflate to the correct pressure. If it is too high, adjust it until it is correct. Always reinstall the valve cap after checking or adjusting tire pressure. If the cap is not replaced, air may leak from the tire. If you lose a valve cap, buy another and install it as soon as possible.

After you have changed wheels, always secure the flat tire in its place and return the jack and tools to their proper storage locations.

- Check the tire pressure as soon as possible after installing a spare tire. Adjust it to the recommended pressure.
- Check and tighten the wheel lug nuts after driving over 50 km (30 miles) if tires are replaced. Recheck the tire wheel lug nuts after driving over 1,000 km (650 miles).

⚠ CAUTION

Your vehicle has metric threads on the wheel studs and nuts. Make certain during wheel removal that the same nuts that were removed are reinstalled – or, if replaced, that nuts with metric threads and the same chamfer configuration are used. Installation of a non-metric thread nut on a metric stud or vice-versa will not secure the wheel to the hub properly and will damage the stud so that it must be replaced.

Note that most lug nuts do not have metric threads. Be sure to use extreme care in checking for thread style before installing aftermarket lug nuts or wheels. If in doubt, consult a professional workshop. Kia recommends to consult an authorized Kia dealer/service partner.

⚠ WARNING

Wheel studs

If the studs are damaged, they may lose their ability to retain the wheel.This could lead to the loss of the wheel and a collision resulting in serious injuries.

To prevent the jack, jack handle, wheel lug nut wrench and spare tire from rattling while the vehicle is in motion, store them properly.

⚠ WARNING

Inadequate spare tire pressure

Check the inflation pressures as soon as possible after installing the spare tire. Adjust it to the specified pressure, if necessary. Refer to "Tires and wheels" on page 8–5.

Important – use of compact spare tire (if equipped)

Your vehicle is equipped with a compact spare tire. This compact spare tire takes up less space than a regular-size tire. This tire is smaller than a conventional tire and is designed for temporary use only.

⚠ CAUTION

- You should drive carefully when the compact spare is in use. The compact spare should be replaced by the proper conventional tire and rim at the first opportunity.
- The operation of this vehicle is not recommended with more than one compact spare tire in use at the same time.

⚠ WARNING

The compact spare tire is for emergency use only. Do not operate your vehicle on this compact spare at the speed over 80 km/h (50 mph).The original tire should be repaired or replaced as soon as possible to avoid failure of the spare possibly leading to personal injury or death.

The compact spare should be inflated to 420 kPa (60 psi).

✻ NOTICE

Check the inflation pressure after installing the spare tire. Adjust it to the specified pressure, as necessary.

When using a compact spare tire, observe the following precautions:

- Under no circumstances should you exceed 80 km/h (50 mph); a higher speed could damage the tire.
- Ensure that you drive slowly enough to avoid all hazards. Any road hazard, such as a pothole or debris, could seriously damage the compact spare.
- Any continuous road use of this tire could result in tire failure, loss of vehicle control, and possible personal injury.
- Do not exceed the vehicle's maximum load rating or the load-carrying capacity shown on the sidewall of the compact spare tire.
- Avoid driving over obstacles. The compact spare tire diameter is smaller than the diameter of a conventional tire and reduces the

ground clearance approximately 2.5 cm (1 inch), which could result in damage to the vehicle.
- Do not take the vehicle through an automatic car wash while the compact spare tire is installed.
- Do not use tire chains on the temporary compact tire. Because of the smaller size, a tire chain will not fit properly. This could damage the vehicle and result in loss of the chain.
- Temporary compact tire should not be installed on the front axle if the vehicle must be driven in snow or on ice.
- Do not use the temporary compact tire on any other vehicle because this tire has been designed especially for your vehicle.
- The temporary compact tire tread life is shorter than a regular tire. Inspect your temporary compact tire regularly and replace worn compact spare tires with the same size and design, mounted on the same wheel.
- The temporary compact tire should not be used on any other wheels, nor should standard tires, snow tires, wheel covers or trim rings be used with the temporary compact spare wheel. If such use is attempted, damage to these items or other car components may occur.
- Do not use more than one temporary compact tire at a time.
- Do not tow a trailer while the temporary compact tire is installed.

Jack label

Example

Type A

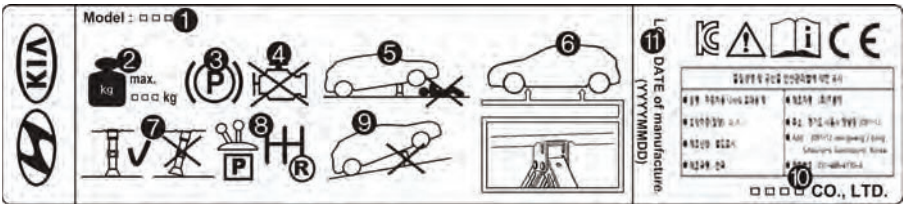

Type B

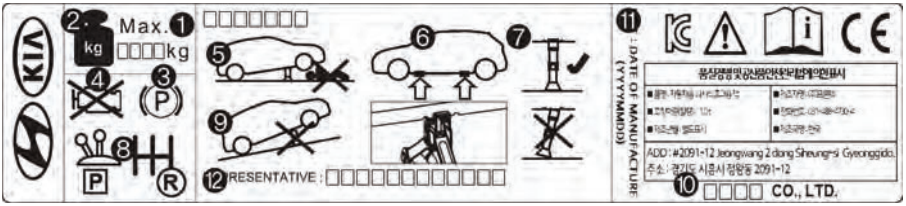

Type C



* The actual Jack label in the vehicle may differ from the illustration. For more detailed specifications, refer to the label attached to the jack.

1. Model Name
2. Maximum allowable load
3. When using the jack, set your parking brake.
4. When using the jack, stop the engine.
5. Do not get under a vehicle that is supported by a jack.
6. The designated locations under the frame
7. When supporting the vehicle, the base plate of jack must be vertical under the lifting point.
8. Shift into Reverse gear on vehicles with manual transmission/intelligent manual transmission or move the shift lever to the P position on vehicles with automatic transmission/dual clutch transmission.
9. The jack should be used on firm level ground.

10. Jack manufacturer
11. Production date
12. Representative company and address

EC Declaration of Conformity for Jack

CE

EC Declaration of Conformity
according to EC Machinery Directive 2006/42/EC

We, **FRONTEC CO., LTD.**
2091-12 Jeongwang 2(i)-dong Siheung-si Gyeonggi-d ,Korea
declare under our sole responsibility that the product

Product : JACK-ASSY
Type Designation(s) : 1200KG, 1000KG, 800KG, 700KG, 500KG
Serial No. : N/A (prototype)
Year of Manufacture : 2013
to which this declaration relates is in conformity with the following standard(s) or other normative document(s);

EN ISO12100 (2010)	Safety of machinery - General principles for design – Risk assessment and risk reduction
EN 1494/A1 (2008)	Mobile or movable jacks and associated lifting equipment

following the provisions of Directive(s);

2006/42/EC	Directive on the approximation of the laws of Member States relating to machinery (OJ L157 Jun. 9, 2006)

Siheung-si Gyeonggi-d ,Korea / 15.07.2013 SOO HONG, MIN President
(Place and date of issue)(Name and signature or equivalent making of authorized person)

* T.C.F Compiling Location:
- Address: PRIBORSKA 280, 739 42 FRYDEK MISTEK,CHLEBOVICE, CZECH REPUBLIC
- Team: Purchase team
- Company name: HANWHA L&C CZECH s.r.o

If you have a flat tire (with Tire Mobility Kit) (if equipped)



Please read the instructions before using the Tire Mobility Kit.

1. Compressor
2. Sealant bottle

The Tire Mobility Kit is a temporary fix to the tire and have the tire inspected by a professional workshop as soon as possible. Kia recommends to visit an authorized Kia dealer/service partner.

⚠ CAUTION

One sealant for one tire

When two or more tires are flat, do not use the tire mobility kit because the supported one sealant of Tire Mobility Kit is only used for one flat tire.

⚠ WARNING

Tire wall

Do not use the Tire Mobility Kit to repair punctures in the tire walls. This can result in an accident due to tire failure.

⚠ WARNING

Temporary fix

Have your tire repaired as soon as possible.The tire may lose air pressure at any time after inflating with the Tire Mobility Kit.

⚠ CAUTION

- When replacing or repairing the tire after using tire sealant, make certain to remove the sealant attached to the inner part of the tire and wheel. If the sealant is not removed, noise and vibration may occur
- We recommend use original Kia manufactured sealant.
- If the TPMS warning light illuminates after using the TMK, have your vehicle inspected by a professional workshop. Kia recommends to contact an authorized Kia dealer/service partner.

Introduction

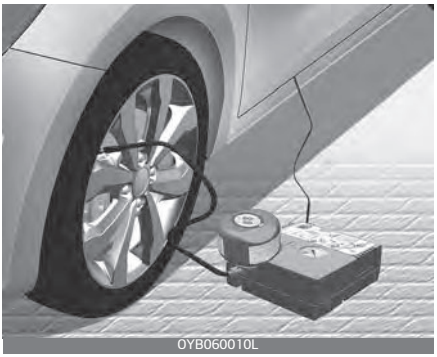

With the Tire Mobility Kit (TMK) you stay mobile even after experiencing a tire puncture.

The system of compressor and sealing compound effectively and comfortably seals most punctures in a passenger car tire caused by nails or similar objects and reinflates the tire.

After you ensured that the tire is properly sealed you can drive cautiously on the tire (up to 200 km (120 miles)) at a max. speed of 80 km/h (50 mph) in order to reach a service station or tire dealer to have the tire replaced.

It is possible that some tires, especially with larger punctures or damage to the sidewall, cannot be sealed completely.

Air pressure loss in the tire may adversely affect tire performance.

For this reason, you should avoid abrupt steering or other driving maneuvers, especially if the vehicle is heavily loaded or if a trailer is in use.

The TMK is not designed or intended as a permanent tire repair method and is to be used for one tire only.

This instruction shows you step by step how to temporarily seal the puncture simply and reliably.

Read the section "Notes on the safe use of the TMK".

⚠ WARNING

Do not use the TMK if a tire is severely damaged by driving run flat or with insufficient air pressure.

Only punctured areas located within the tread region of the tire can be sealed using the TMK.

Components of the Tire Mobility Kit (TMK)

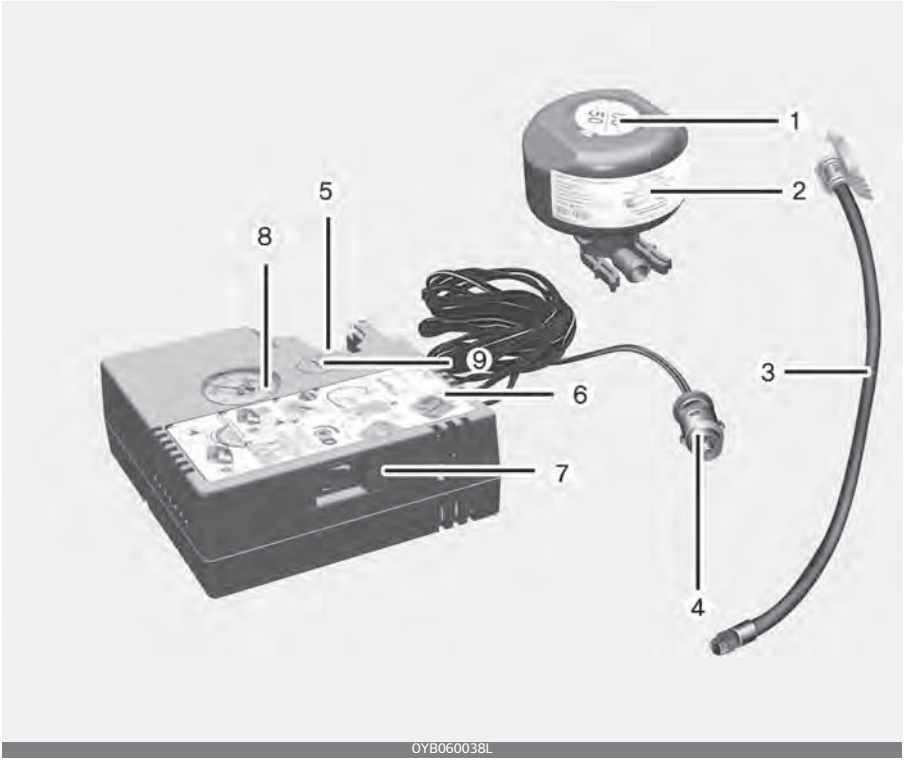

OYB060038L

1. Speed restriction label
2. Sealant bottle and label with speed restriction
3. Filling hose from sealant bottle to wheel
4. Connectors and cable for the power outlet direct connection
5. Holder for the sealant bottle
6. Compressor
7. On/off switch
8. Pressure gauge for displaying the tire inflation pressure
9. Button for reducing tire inflation pressure

Connectors, cable and connection hose are stored in the compressor housing.

⚠ WARNING

Before using the Tire Mobility Kit, follow the instructions on the sealant bottle.

Remove the label with the speed restriction from the sealant bottle and apply it to the steering wheel.

Please note the expiry date on the sealant bottle.

Using the Tire Mobility Kit

1. Detach the speed restriction label (1) from the sealant bottle (2), and place it in a highly visible place inside the vehicle such as on the steering wheel to remind the driver not to drive too fast.
2. Filling the sealant Strictly follow the specified sequence, otherwise the sealant may escape under high pressure.
3. Shake the sealant bottle.


ODEEV088012NR

4. Connect the filling hose (3) onto the connector of the sealant bottle (A).

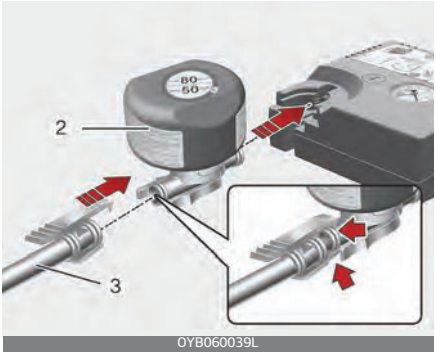

OYB060039L

5. Ensure that button (9) on the compressor is not pressed.
6. Unscrew the valve cap from the valve of the defective wheel and screw filling hose (3) of the sealant bottle onto the valve.
7. Insert the sealant bottle into the housing of the compressor so that the bottle is upright (B).
8. Ensure that the compressor is switched off, position 0.


OYB060010L

⚠ CAUTION


OYB060026L

Securely install the sealant filling hose to the valve. If not, sealant

may flow backward, possibly clogging the filling hose.

9. Connect between compressor and the vehicle power outlet using the cable and connectors.


OYB060012L

NOTICE

Only use the front passenger side power outlet.

10. With the ignition switched on or ENGINE START/STOP button position on: Switch on the compressor and let it run for approximately 3 minutes to fill the sealant. The inflation pressure of the tire after filling is unimportant.
11. Switch off the compressor.
12. Detach the hose from the sealant bottle connector and from the tire valve.

Return the Tire Mobility Kit to its storage location in the vehicle.

WARNING

Carbon monoxide poisoning and suffocation is possible if the engine is left running in a poorly ventilated or unventilated location (such as inside a building).

Distributing the sealant

13. Immediately drive approximately 7~10 km (4~6 miles or, about 10 min) to evenly distribute the sealant in the tire.

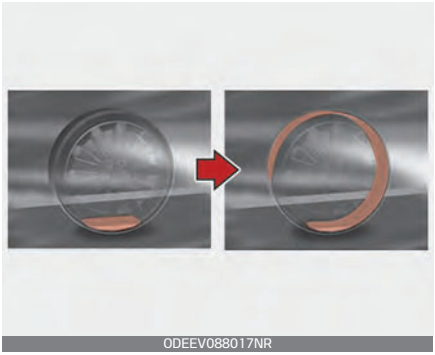
ODEEV088017NR

CAUTION

Do not exceed a speed of 60 km/h (35 mph). If possible, do not fall below a speed of 20 km/h (12 mph).

While driving, if you experience any unusual vibration, ride disturbance or noise, reduce your speed and drive with caution until you can safely pull off of the side of the road. Call for road side service or towing.

When you use the Tire Mobility Kit, the wheel may be stained by sealant. Therefore, remove the wheel stained by sealant and have the vehicle inspected at a professional workshop. Kia recommends to visit an authorized Kia dealer/service partner.

Checking the tire inflation pressure

1. After driving approximately 7~10 km (4~6 miles or about 10 minutes), stop at a suitable location.
2. Connect the filling hose (3) of the compressor (clip mounted side) directly and then connect the filling hose (3) (opposite side) to the tire valve.
3. Connect between compressor and the vehicle battery using the cable and connectors.
4. Adjust the tire inflation pressure to 200 kPa (29 psi). With the ignition switched on, proceed as follows.
   - **To increase the inflation pressure:** Switch on the compressor, position I. To check the current inflation pressure setting, briefly switch off the compressor.

⚠ WARNING

Do not let the compressor run for more than 10 minutes, otherwise the device will overheat and may be damaged.

   - **To reduce the inflation pressure:** Press the button (9) on the compressor.

⚠ CAUTION

If the inflation pressure is not maintained, drive the vehicle a second time, refer to Distributing the sealant. Then repeat steps 1 to 4.

Use of the TMK may be ineffectual for tire damage larger than approximately 4 mm (0.16 in).

Contact a professional workshop if the tire cannot be made roadworthy with the Tire Mobility Kit. Kia recommends to visit an authorized Kia dealer/service partner.

⚠ WARNING

The tire inflation pressure must be at least 200 kPa (29 psi). If it is not, do not continue driving. Call for road side service or towing.

Notes on the safe use of the Tire Mobility Kit

- Park your car at the side of the road so that you can work with the TMK away from moving traffic. Place your warning triangle in a prominent place to make pass-

ing vehicles aware of your location.
- To be sure your vehicle will not move, even when you're on fairly level ground, always set your parking brake.
- Only use the TMK for sealing/ inflation passenger car tires. Do not use on motorcycles, bicycles or any other type of tires.
- Do not remove any foreign objectssuch as nails or screws – that have penetrated the tire.
- Before using the TMK, read the precautionary advice printed on the sealant bottle!
- Provided the car is outdoors, leave the engine running. Otherwise operating the compressor may eventually drain the car battery.
- Never leave the TMK unattended while it is being used.
- Do not leave the compressor running for more than 10 min. at a time or it may overheat.
- Do not use the TMK if the ambient temperature is below –30°C (–22°F).
- When the tire and wheel are damaged, do not use Tire Mobility Kit for your safety.

Technical Data

System voltage: DC 12 V

Working voltage: DC 10 – 15 V

Amperage rating: 10 A ± 1A (at DC 12V operation)

Suitable for use at temperatures: –30 ~ +70°C (–22 ~ +158°F)

Max. working pressure: 6 bar (87 psi)

Size

Compressor: 161 x 150 x 55.8 mm (6.3 x 5.9 x 2.2 in.)

Sealant bottle: 81 x 85.5 ø mm (3.2 x 3.4 ø in.)

Compressor weight: 0.7 kg (1.5 lbs)

Sealant volume: 200 ml (12.2 cu. in.)

* Sealant and spare parts can be obtained and replaced at an authorized vehicle or tire dealer. Empty sealant bottles may be disposed of at home. Liquid residue from the sealant should be disposed of by your vehicle or tire dealer or in accordance with local waste disposal regulations.

Towing

Towing service

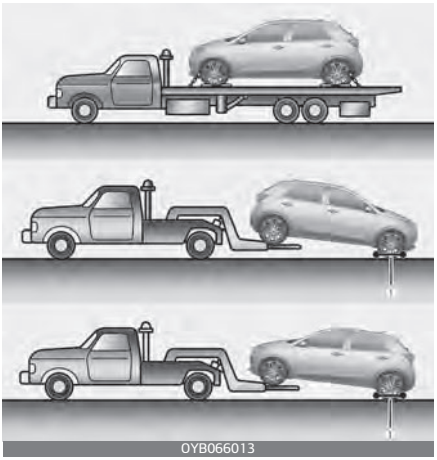
OYB066013

If emergency towing is necessary, we recommend having it done by an authorized Kia dealer or a commercial tow-truck service. Proper lifting and towing procedures are necessary to prevent damage to the vehicle. The use of wheel dollies (1) or flatbed is recommended.

It is acceptable to tow the vehicle with the rear wheels on the ground (without dollies) and the front wheels off the ground.

If any of the loaded wheels or suspension components are damaged or the vehicle is being towed with the front wheels on the ground, use a towing dolly under the front wheels.

When being towed by a commercial tow truck and wheel dollies are not used, the front of the vehicle should always be lifted, not the rear.

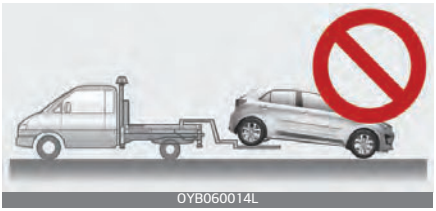
OYB060014L


OYB060015L

⚠ CAUTION

- Do not tow the vehicle backwards with the front wheels on the ground as this may cause damage to the vehicle.
- Do not tow with sling-type equipment. Use wheel lift or flatbed equipment.

When towing your vehicle in an emergency without wheel dollies :

1. Set the ignition switch in the ACC position.
2. Place the transmission shift lever in N (Neutral).
3. Release the parking brake.

⚠ CAUTION

Failure to place the transmission shift lever in N (Neutral) may cause internal damage to the transmission.

Removable towing hook (if equipped)

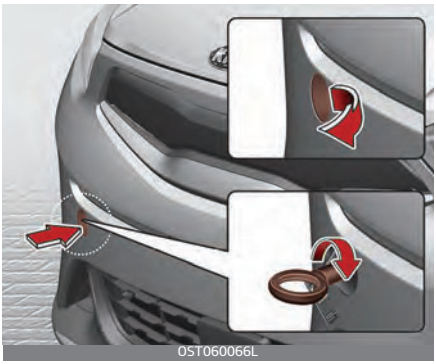

1. Open the tailgate, and remove the towing hook from the tool case.
2. Remove the hole cover pressing the lower part of the cover on the bumper.
3. Install the towing hook by turning it clockwise into the hole until it is fully secured.
4. Remove the towing hook and install the cover after use.

Emergency towing

Front



Rear

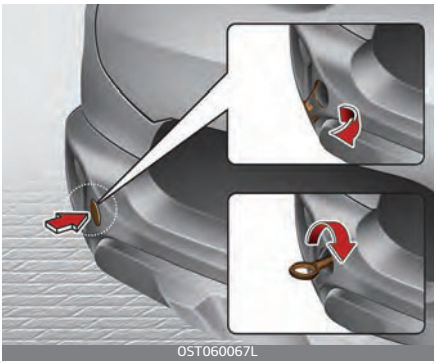

If towing is necessary, we recommend you to have it done by an authorized Kia dealer or a commercial tow truck service.

If towing service is not available in an emergency, your vehicle may be temporarily towed using a cable or chain secured to the emergency towing hook under the front (or rear) of the vehicle. Use extreme caution when towing the vehicle. A

driver must be in the vehicle to steer it and operate the brakes.

Towing in this manner may be done only on hard-surfaced roads for a short distance and at low speed. Also, the wheels, axles, power train, steering and brakes must all be in good condition.

- Do not use the tow hooks to pull a vehicle out of mud, sand or other conditions from which the vehicle cannot be driven out under its own power.
- Avoid towing a vehicle heavier than the vehicle doing the towing.
- The drivers of both vehicles should communicate with each other frequently.

⚠ CAUTION

- Attach a towing strap to the tow hook.
- Using a portion of the vehicle other than the tow hooks for towing may damage the body of your vehicle.
- Use only a cable or chain specifically intended for use in towing vehicles. Securely fasten the cable or chain to the towing hook provided.
- Accelerate or decelerate the vehicle in a slow and gradual manner while maintaining tension on the tow rope or chain to start or drive the vehicle, otherwise tow hooks and the vehicle may be damaged.
- Before emergency towing, check if the hook is not broken or damaged.
- Fasten the towing cable or chain securely to the hook.
- Do not jerk the hook. Apply it steadily and with even force.
- To avoid damaging the hook, do not pull from the side or at a vertical angle. Always pull straight ahead.

⚠ WARNING

Use extreme caution when towing the vehicle.

- Avoid sudden starts or erratic driving maneuvers which would place excessive stress on the emergency towing hook and towing cable or chain. The hook and towing cable or chain may break and cause serious injury or damage.
- If the disabled vehicle is unable to be moved, do not forcibly continue the towing. We recommend that you contact an authorized Kia dealer or a commercial tow truck service for assistance.
- Tow the vehicle as straight ahead as possible.
- Keep away from the vehicle during towing.

- Use a towing strap less than 5 m (16 feet) long. Attach a white or red cloth (about 30 cm (12 inches) wide) in the middle of the strap for easy visibility.

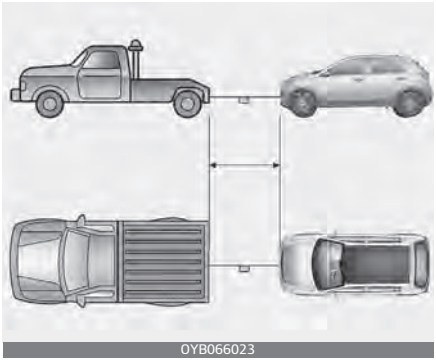

OYB066023

- Drive carefully so that the towing strap is not loosened during towing.
- The driver must be in the vehicle for steering and braking operations when the vehicle is towed and passengers other than the driver must not be allowed to be on board.

Emergency towing precautions

- Turn the ignition switch to ACC so the steering wheel isn't locked.
- Place the transmission shift lever in N (Neutral).
- Release the parking brake.
- Press the brake pedal with more force than normal since you will have reduced brake performance.
- More steering effort will be required because the power steering system will be disabled.
- If you are driving down a long hill, the brakes may overheat and brake performance will be reduced. Stop often and let the brakes cool off.
- The vehicle should be towed at a speed of 25 km/h (15 mph) or less within the distance of 20 km (12 miles). (for Manual transmission/ iMT vehicle)
- To avoid serious damage to the automatic transmission/dual clutch transmission limit the vehicle speed to 15 km/h (10 mph) and drive less than 1.5 km (1 mile) when towing. (for Automatic transmission/Dual Clutch Transmission vehicle)

⚠ CAUTION

Automatic transmission/dual clutch transmission

- If the car is being towed with all four wheels on the ground, it can be towed only from the front. Be sure that the automatic transmission/dual clutch transmission is in N (Neutral). Be sure the steering is unlocked by placing the ignition switch in the ACC position. A driver must be in the towed vehicle to operate the steering and brakes.
- Before towing, check the automatic transmission/dual clutch transmission for fluid leaks under your vehicle. If the automatic

transmission/dual clutch transmission fluid is leaking, flatbed equipment or a towing dolly must be used.

Emergency Commodity (if equipped)

There are some emergency commodities in the vehicle to help you respond to the emergency situation.

Fire extinguisher

If there is small fire and you know how to use the fire extinguisher, take the following steps carefully

1. Pull the pin at the top of the extinguisher that keeps the handle from being accidentally pressed.
2. Aim the nozzle toward the base of the fire.
3. Stand approximately 2.5 m (8 ft) away from the fire and squeeze the handle to discharge the extinguisher. If you release the handle, the discharge will stop.
4. Sweep the nozzle back and forth at the base of the fire. After the fire appears to be out, watch it carefully since it may re-ignite.

First aid kit

There are some items such as scissors, bandage and adhesive tape and etc. in the kit to give first aid to an injured person.

Triangle reflector

Place the triangle reflector on the road to warn oncoming vehicles during emergencies, such as when the vehicle is parked by the roadside due to any problems.

Tire pressure gauge (if equipped)

Tires normally lose some air in dayto-day use, and you may have to add a few pounds of air periodically and it is not usually a sign of a leaking tire, but of normal wear. Always check tire pressure when the tires are cold because tire pressure increases with temperature.

To check the tire pressure, take the following steps;

1. Unscrew the inflation valve cap that is located on the rim of the tire.
2. Press and hold the gauge against the tire valve. Some air will escape as you begin and more will escape if you don't press the gauge in firmly.
3. A firm non-leaking push will activate the gauge.
4. Read the tire pressure on the gauge to know whether the tire pressure is low or high.
5. Adjust the tire pressures to the specified pressure. Refer to "Tires and wheels" on page 8-5.
6. Reinstall the inflation valve cap.

Maintenance 7

Engine compartment **7-5**

Maintenance services **7-7**

- Owner's responsibility 7-7
- Owner maintenance precautions 7-7

Owner maintenance **7-9**

- Owner maintenance schedule 7-9

Scheduled maintenance service **7-11**

- Scheduled maintenance service precaution 7-11
- Normal Maintenance Schedule - For Gasoline Engine [For Europe (Except Russia)] 7-12
- Maintenance Under Severe Usage Conditions - For Gasoline Engine [For Europe (Except Russia)] 7-17
- Normal Maintenance Schedule - For Gasoline Engine [Except Europe (Including Russia)] 7-20
- Maintenance Under Severe Usage Conditions - For Gasoline Engine [Except Europe (Including Russia)] 7-25

Explanation of scheduled maintenance items **7-28**

Engine oil (Gasoline) **7-32**

- Checking the engine oil level 7-32
- Changing the engine oil and filter 7-34

Engine Coolant **7-36**

- Checking the coolant level 7-36
- Changing the coolant 7-38

Brake/clutch fluid **7-39**

- Checking the brake/clutch fluid level 7-39

Intelligent manual transmission (iMT) system actuator fluid . **7-40**

7 Maintenance

• Checking the intelligent manual transmission (iMT) system actuator fluid level 7-40
Washer fluid 7-42
• Checking the washer fluid level 7-42
Parking brake 7-43
• Checking the parking brake 7-43
Air cleaner 7-43
• Filter replacement 7-43
Climate control air filter 7-44
• Filter inspection 7-44
Wiper blades 7-46
• Blade inspection 7-46
• Blade replacement 7-46
Battery 7-49
• For best battery service 7-49
• Battery capacity label 7-51
• Battery recharging 7-51
• Reset items 7-52
Tires and wheels 7-53
• Tire care 7-53
• Recommended cold tire inflation pressures 7-53
• Checking tire inflation pressure 7-54
• Tire rotation 7-55
• Wheel alignment and tire balance 7-56
• Tire replacement 7-57
• Wheel replacement 7-58
• Tire traction 7-59
• Tire maintenance 7-59
• Tire sidewall labeling 7-59

• Low aspect ratio tire 7-63
Fuses 7-64
• Inner panel fuse replacement 7-66
• Engine compartment fuse replacement 7-68
• Fuse/relay panel description 7-69
Light bulbs 7-85
• Bulb replacement precaution 7-85
• Light bulb position (Front) 7-87
• Light bulb position (Rear) 7-88
• Light bulb position (Side) 7-90
• Side repeater lamp (LED type) bulb Replacement 7-90
• Side repeater lamp (Bulb type) bulb Replacement 7-91
• Headlamp (Low/High beam) bulb replacement (Headlamp Type A) 7-91
• Front turn signal lamp bulb replacement (Headlamp Type A) 7-92
• Position lamp/Daytime running lamp bulb replacement (Headlamp Type A) 7-93
• Headlamp (Low/High beam) bulb replacement (Headlamp Type B) 7-93
• Front turn signal lamp bulb replacement (Headlamp Type B) 7-94
• Static bending light (Bulb type) replacement (Headlamp Type B) 7-95
• Position lamp/Daytime running lamp (LED type) replacement (Headlamp Type B) 7-95
• Headlamp (Low beam) (LED Type) bulb replacement (Headlamp Type C) 7-96
• Headlamp (High beam) (LED Type) bulb replacement (Headlamp Type C) 7-96

7 Maintenance

- Daytime running lamp/Front turn signal lamp (LED Type) replacement (Headlamp Type C) 7-97
- Daytime running lamp/Position lamp (LED Type) replacement (Headlamp Type C) 7-97
- Front fog lamp (bulb type) bulb replacement (Fog lamp type A) 7-98
- Front fog lamp (LED type) bulb replacement (Fog lamp type B) 7-98
- Rear turn signal lamp bulb replacement 7-99
- Stop and tail lamp bulb replacement 7-99
- Tail lamp (inside) bulb replacement 7-100
- Stop and tail lamp (LED type) bulb replacement 7-101
- Back up lamp (Bulb type) bulb replacement 7-102
- Rear fog lamp (Bulb type) bulb replacement 7-102
- High mounted stop lamp bulb replacement 7-103
- License plate lamp bulb replacement 7-104
- Map lamp bulb replacement 7-104
- Vanity mirror lamp bulb replacement 7-105
- Room lamp bulb replacement 7-105
- Glove box lamp bulb replacement 7-106
- Tailgate room lamp bulb replacement 7-106
- Headlamp and front fog lamp aiming (for Europe) 7-107

Appearance care 7-113

- Exterior care 7-113
- Interior care 7-118

Emission control system 7-121

- 1. Crankcase emission control system 7-121
- 2. Evaporative emission control system 7-121
- 3. Exhaust emission control system 7-122

Maintenance

Engine compartment

Smartstream G1.0 T-GDi/Smartstream G1.0 T-GDi 48V HEV

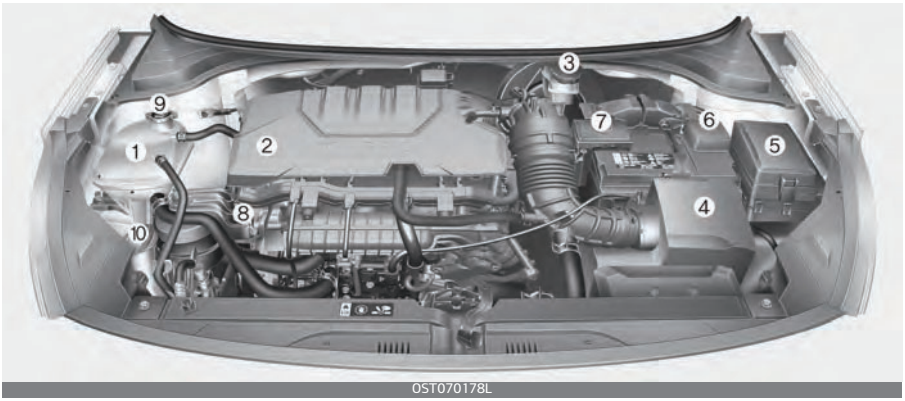

OST070178L

* The actual engine room in the vehicle may differ from the illustration.

1. Engine coolant reservoir
2. Engine oil filler cap
3. Brake / clutch fluid reservoir
4. Air cleaner
5. Fuse box
6. Negative battery terminal
7. Positive battery terminal
8. Engine oil dipstick
9. Radiator cap
10. Windshield washer fluid reservoir

Smartstream G1.2

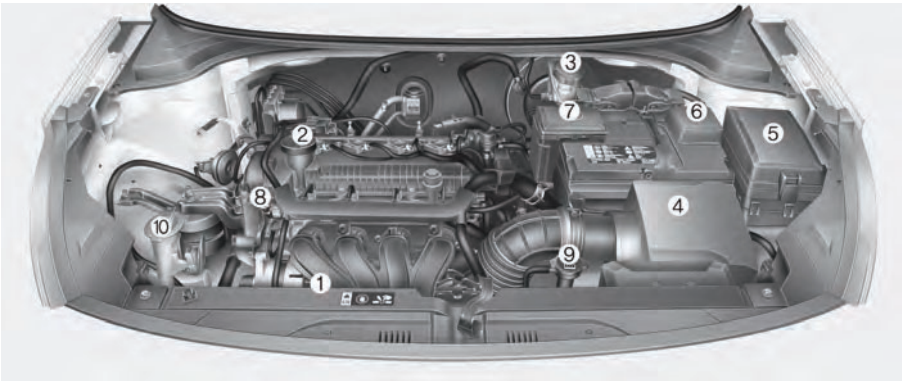

OYB070002L

(Gasoline engine) 1.4 MPI

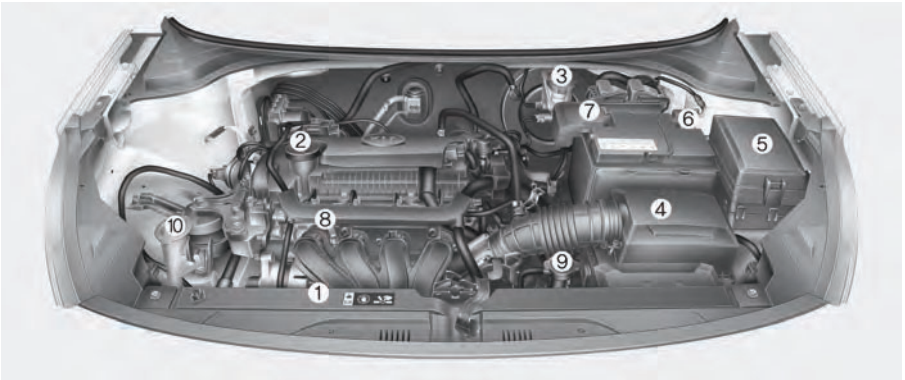

OYB070163L

* The actual engine room in the vehicle may differ from the illustration.

1. Engine coolant reservoir
2. Engine oil filler cap
3. Brake / clutch fluid reservoir
4. Air cleaner
5. Fuse box
6. Negative battery terminal
7. Positive battery terminal
8. Engine oil dipstick
9. Radiator cap
10. Windshield washer fluid reservoir

Maintenance services

You should exercise the utmost care to prevent damage to your vehicle and injury to yourself whenever performing any maintenance or inspection procedures.

Inadequate, incomplete or insufficient servicing may result in operational problems with your vehicle that could lead to vehicle damage, an accident, or personal injury.

Owner's responsibility

✻ NOTICE

Maintenance Service and Record Retention are the owner's responsibility.

Have your vehicle serviced by a professional workshop. Kia recommends to visit an authorized Kia dealer/service partner.

You should retain documents that show proper maintenance has been performed on your vehicle in accordance with the scheduled maintenance service charts shown on the following pages.

You need this information to establish your compliance with the servicing and maintenance requirements of your vehicle warranties.

Detailed warranty information is provided in your Warranty & Maintenance book.

Repairs and adjustments required as a result of improper maintenance or a lack of required maintenance are not covered when your vehicle is covered by warranty.

Owner maintenance precautions

Improper or incomplete service may result in problems. This section gives instructions only for the maintenance items that are easy to perform.

✻ NOTICE

Improper owner maintenance during the warranty period may affect warranty coverage. For details, read the separate Warranty & Maintenance book provided with the vehicle. If you're unsure about any servicing or maintenance procedure, have the system serviced by a professional workshop. Kia recommends to visit an authorized Kia dealer/service partner.

⚠ WARNING

Maintenance work

- Performing maintenance work on a vehicle can be dangerous. You can be seriously injured while performing some maintenance procedures. If you lack sufficient knowledge and experience or the proper tools and equipment to do the work, have the system serviced by a professional workshop. Kia recommends to visit an authorized Kia dealer/service partner.
- Working under the hood with the engine running is dangerous. It becomes even more dangerous when you wear jewelry or loose clothing. These can become entangled in moving parts and result in injury.
  Therefore, if you must run the engine while working under the hood, make certain that you remove all jewelry (especially rings, bracelets, watches, and necklaces) and all neckties, scarves, and similar loose clothing before getting near the engine or cooling fans.

⚠ CAUTION

- Do not put heavy objects or apply excessive force on top of the engine cover (if equipped) or fuel related parts.
- When you inspect the fuel system (fuel lines and fuel injection devices), contact a professional workshop. Kia recommends to visit an authorized Kia dealer/service partner.
- Do not drive long time with the engine cover (if equipped) removed.
- When checking the engine room, do not go near fire.
  Fuel, washer fluid, etc. are flammable oils that may cause fire.
- Before touching the battery, ignition cables and electrical wiring, you should disconnect the battery "–" terminal. You may get an electric shock from the electric current.
- When you remove the interior trim cover with a flat bed (–) driver, be careful not to damage the cover.
- Be careful when you replace and clean bulbs to avoid burns or electrical shock.

Owner maintenance

The following lists are vehicle checks and inspections that should be performed at the frequencies indicated to help ensure safe, dependable operation of your vehicle.

Any adverse conditions should be brought to the attention of your dealer as soon as possible.

These Owner Maintenance Checks are generally not covered by warranties and you may be charged for labor, parts and lubricants used.

Owner maintenance schedule

When you stop for fuel:

- Check the coolant level in the coolant reservoir.
- Check the windshield washer fluid level.
- Look for low or under-inflated tires.

⚠ WARNING

Be careful when checking your engine coolant level when the engine is hot. Scalding hot coolant and steam may blow out under pressure. This could cause burns or other serious injury.

While operating your vehicle:

- Note any changes in the sound of the exhaust or any smell of exhaust fumes in the vehicle.
- Check for vibrations in the steering wheel. Notice any increased steering effort or looseness in the steering wheel, or change in its straightahead position.
- Notice if your vehicle constantly turns slightly or "pulls" to one side when traveling on smooth, level road.
- When stopping, listen and check for unusual sounds, pulling to one side, increased brake pedal travel or "hard-to-push" brake pedal.
- If any slipping or changes in the operation of your transmission occurs, check the transmission fluid level.
- Check manual transmission/intelligent manual transmission operation, including clutch operation.
- Check the automatic transmission/dual clutch transmission P (Park) function.
- Check the parking brake.
- Check for fluid leaks under your vehicle (water dripping from the air conditioning system during or after use is normal).

At least monthly:

- Check the coolant level in the engine coolant reservoir.
- Check the operation of all exterior lights, including the stoplights, turn signals and hazard warning flashers.
- Check the inflation pressures of all tires including the spare for tires that are worn, show uneven wear, or are damaged.
- Check for loose wheel lug nuts.

At least twice a year (i.e., every Spring and Fall):

- Check the radiator, heater and air conditioning hoses for leaks or damage.
- Check the windshield washer spray and wiper operation. Clean the wiper blades with clean cloth dampened with washer fluid.
- Check the headlight alignment.
- Check the muffler, exhaust pipes, shields and clamps.
- Check the lap/shoulder belts for wear and function.

At least once a year:

- Clean the body and door drain holes.
- Lubricate the door hinges and checks, and hood hinges.
- Lubricate the door and hood locks and latches.
- Lubricate the door rubber weatherstrips.
- Check the air conditioning system.
- Inspect and lubricate the automatic transmission linkage and controls.
- Clean the battery and terminals.
- Check the brake/clutch fluid level.

Scheduled maintenance service

Scheduled maintenance service precaution

Follow the Normal Maintenance Schedule if the vehicle is usually operated where none of the following conditions apply. If any of the following conditions apply, follow the Maintenance Under Severe Usage Conditions.

- Repeated driving short distance of less than 8 km (5 miles) in normal temperature or less than 16 km (10 miles) in freezing temperature
- Extensive engine idling or low speed driving for long distances
- Driving on rough, dusty, muddy, unpaved, graveled or salt-spread roads
- Driving in areas using salt or other corrosive materials or in very cold weather
- Driving in heavy dust condition
- Driving in heavy traffic area
- Driving on uphill, downhill, or mountain road repeatedly
- Using for towing or camping and driving with loading on the roof.
- Driving as a patrol car, taxi, other commercial use of vehicle towing
- Frequently driving under high speed or rapid acceleration/deceleration.
- Frequently driving in stop-and-go condition
- Engine oil usage which is not recommended (Mineral type, Semi-synthetic, Lower grade spec, etc.)

If your vehicle is operated in any of the prior listed conditions, you should inspect, replace or refill more frequently, using the severe usage maintenance schedule instead of the normal usage maintenance schedule.

Normal Maintenance Schedule – For Gasoline Engine [For Europe (Except Russia)]

The following maintenance services must be performed to ensure good emission control and performance. Keep receipts for all vehicle emission services to protect your warranty. Where both mileage and time are shown, the frequency of service is determined by whichever occurs first.

NO.	ITEM	REMARK
*1	Engine oil and engine oil filter	• As it is normal for engine oil to be consumed during driving, the engine oil level should be checked on regular basis. • The engine oil change interval for normal operating conditions is based on the use of the recommended engine specification. If the recommended engine oil specification is not used, then replace the engine oil according to the maintenance schedule under severe operating conditions.
*2	Coolant (Engine)	When adding coolant, use only deionized water or soft water for your vehicle and never mix hard water in the coolant filled at the factory. An improper coolant mixture can result in serious malfunction or engine damage.
*3	Drive belts (Engine)	• Adjust alternator, water pump and air conditioner (if equipped) drive belt. Inspect and if necessary repair or replace. • Inspect drive belt tensioner, idler and alternator pulley and if necessary correct or replace.
*4	Spark plug	For your convenience, it can be replaced prior to it's interval when you do maintenance of other items.
*5	Manual transmission fluid	Manual transmission fluid should be changed anytime it has been submerged in water.
*6	Dual clutch transmission (DCT) fluid	Dual clutch transmission (DCT) fluid should be changed anytime it has been submerged in water.

NO.	ITEM	REMARK
*7	Fuel additives (Gasoline)	Kia recommends that you use unleaded gasoline which has an octane rating of RON (Research Octane Number) 95 / AKI (Anti Knock Index) 91 or higher (for Europe) or Octane Rating of RON (Research Octane Number) 91 / AKI (Anti-Knock Index) 87 or higher (except Europe). For customers who do not use good quality gasolines including fuel additives regularly, and have problems starting or the engine does not run smoothly, one bottle of additives added to the fuel tank at every 15,000 km (10,000 miles) (for Europe, Australia and New Zealand)/ 10,000 km (6,500 miles) (except Europe, Australia and New Zealand, China) / 5,000 km (3,000 miles) (for China). Additives are available from a professional workshop along with information on how to use them. Kia recommends to visit an authorized Kia dealer/service partner. Do not mix other additives.

MAINTENANCE INTERVALS	Normal Maintenance Schedule – For Gasoline Engine [For Europe (Except Russia)]								
	Number of months or driving distance, whichever comes first								
MAINTENANCE ITEM	Months	12	24	36	48	60	72	84	96
	Miles×1,000	10	20	30	40	50	60	70	80
	Km×1,000	15	30	45	60	75	90	105	120
Engine oil and engine oil filter *1	Smartstream G1.0 T-GDi	R	R	R	R	R	R	R	R
	Smartstream G1.0 T-GDi 48V HEV								
	Smartstream G1.2								
	(Gasoline engine) 1.4 MPI								
Coolant (Engine) *2		At first, Replace 210,000 km (140,000 miles) or 120 months after that, Replace every 30,000 km (20,000 miles) or 24 months							
Drive belts (Engine) *3	Smartstream G1.0 T-GDi	At first, Inspect 90,000 km (60,000 miles) or 72 months after that, Inspect every 30,000 km (20,000 miles) or 24 months							
	Smartstream G1.2								
	(Gasoline engine) 1.4 MPI								
	Smartstream G1.0 T-GDi 48V HEV	I	I	I	I	I	I	R	I
Vacuum hoses and crankcase ventilation hoses		–	I	–	I	–	I	–	I

MAINTENANCE INTERVALS		Normal Maintenance Schedule – For Gasoline Engine [For Europe (Except Russia)]							
		Number of months or driving distance, whichever comes first							
MAINTENANCE ITEM	Months	12	24	36	48	60	72	84	96
	Miles×1,000	10	20	30	40	50	60	70	80
	Km×1,000	15	30	45	60	75	90	105	120
Spark plugs *4	Smartstream G1.0 T-GDi	Replace every 75,000 km (50,000 miles)							
	Smartstream G1.0 T-GDi 48V HEV								
	Smartstream G1.2	Replace every 150,000 km (100,000 miles)							
	(Gasoline engine) 1.4 MPI	Replace every 150,000 km (100,000 miles)							
Manual transmission fluid *5		–	–	–	I	–	–	–	I
iMT system actuator fluid	Smartstream G1.0 T-GDi 48V HEV	I	R	I	R	I	R	I	R
Automatic transmission fluid	6 A/T	No check, No service required							
Dual clutch transmission (DCT) fluid*6		–	–	–	I	–	–	–	I
Drive shaft and boots		–	I	–	I	–	I	–	I
Fuel additives (Gasoline)*7		Add every 15,000 km (10,000 miles) or 12 months							
Fuel lines, hoses and connections		–	–	–	I	–	–	–	I
iMT system clutch tube and line	Smartstream G1.0 T-GDi 48V HEV	I	I	I	I	I	I	I	I
Fuel tank air filter		–	–	–	I	–	–	–	I
Fuel tank and fuel cap		–	–	–	I	–	–	–	I
Air cleaner filter		–	I	–	R	–	I	–	R

MAINTENANCE INTERVALS	Normal Maintenance Schedule – For Gasoline Engine [For Europe (Except Russia)]								
	Number of months or driving distance, whichever comes first								
MAINTENANCE ITEM	Months	12	24	36	48	60	72	84	96
	Miles×1,000	10	20	30	40	50	60	70	80
	Km×1,000	15	30	45	60	75	90	105	120
Intercooler, in/out hose, air intake hose	Smartstream G1.0 T-GDi	I	I	I	I	I	I	I	I
	Smartstream G1.0 T-GDi 48V HEV	I	I	I	I	I	I	I	I
Exhaust system		I	I	I	I	I	I	I	I
Cooling system		At first, Inspect 60,000 km (40,000 miles) or 48 months after that, Inspect every 30,000 km (20,000 miles) or 24 months							
Air conditioner compressor/refrigerant		I	I	I	I	I	I	I	I
Climate control air filter		–	R	–	R	–	R	–	R
Brake discs and pads		I	I	I	I	I	I	I	I
Brake drums and linings		–	I	–	I	–	I	–	I
Brake lines, hoses and connections		I	I	I	I	I	I	I	I
Brake/clutch fluid		I	R	I	R	I	R	I	R
Parking brake		–	I	–	I	–	I	–	I
Steering gear rack, linkage and boots		I	I	I	I	I	I	I	I
Suspension ball joints		I	I	I	I	I	I	I	I
Tire (pressure & tread wear)		I	I	I	I	I	I	I	I
Battery condition		I	I	I	I	I	I	I	I

I : Inspect and if necessary, adjust, correct, clean or replace.

R : Replace or change.

Maintenance Under Severe Usage Conditions – For Gasoline Engine [For Europe (Except Russia)]

MAINTENANCE ITEM		MAINTE-NANCE OPERA-TION	MAINTENANCE INTER-VALS	DRIVING CONDITION
Engine oil and engine oil filter	Smartstream G1.0 T-GDi	R	Every 7,500 km (5,000 miles) or 6 months	A, B, C, D, E, F, G, H, I, J, K, L
	Smartstream G1.0 T-GDi 48V HEV			
	Smartstream G1.2			
	(Gasoline engine) 1.4 MPI			
Spark plugs		R	Replace more frequently depending on the condition	A, B, F, G, H, I, K
Manual transmission fluid		R	Every 120,000 km (80,000 miles)	C, D, E, F, G, H, I, J
Automatic transmission fluid		R	Every 100,000 km (65,000 miles)	A, C, D, E, F, G, H, I, K
Dual clutch transmission (DCT) fluid		R	Every 120,000 km (80,000 miles)	C, D, F, G, H, I, J
Drive shaft and boots		I	Inspect more frequently depending on the condition	C, D, E, F, G, H, I, J
Air cleaner filter		R	Replace more frequently depending on the condition	C, E
Climate control air filter		R	Replace more frequently depending on the condition	C, E, G
Brake discs, pads and calipers		I	Inspect more frequently depending on the condition	C, D, E, G, H

MAINTENANCE ITEM	MAINTE-NANCE OPERA-TION	MAINTENANCE INTER-VALS	DRIVING CONDITION
Brake drums and linings	I	Inspect more fre-quently depending on the condition	C, D, E, G, H
Parking brake	I	Inspect more fre-quently depending on the condition	C, D, G, H
Steering gear rack, linkage and boots	I	Inspect more fre-quently depending on the condition	C, D, E, F, G
Suspension ball joints	I	Inspect more fre-quently depending on the condition	C, D, E, F, G

Maintenance operation

I : Inspect and if necessary, adjust, correct, clean or replace.
R : Replace or change.

Severe driving conditions

A : Repeatedly driving short distance of less than 8 km (5 miles) in normal temperature or less than 16 km (10 miles) in freezing temperature.

B : Extensive engine idling or low speed driving for long distances.

C : Driving on rough, dusty, muddy, unpaved, graveled or salt-spread roads.

D : Driving in areas using salt or other corrosive materials or in very cold weather

E : Driving in heavy dust condition.

F : Driving in heavy traffic area.

G : Driving on uphill, downhill, or mountain roads repeatedly.

H : Using for towing or camping and driving with loading on the roof.

I : Driving for patrol car, taxi, other commercial use of vehicle towing.

J : Frequently driving under high speed or rapid acceleration/deceleration.

K : Frequently driving in stop-and-go conditions.

L : Engine oil usage which is not recommended (Mineral type, Semisynthetic, Lower grade spec, etc.)

Normal Maintenance Schedule – For Gasoline Engine [Except Europe (Including Russia)]

The following maintenance services must be performed to ensure good emission control and performance. Keep receipts for all vehicle emission services to protect your warranty. Where both mileage and time are shown, the frequency of service is determined by whichever occurs first.

NO.	ITEM	REMARK
*1	Engine oil and engine oil filter	• As it is normal for engine oil to be consumed during driving, the engine oil level should be checked on regular basis. • The engine oil change interval for normal operating conditions is based on the use of the recommended engine specification. If the recommended engine oil specification is not used, then replace the engine oil according to the maintenance schedule under severe operating conditions.
*2	Coolant (Engine)	When adding coolant, use only deionized water or soft water for your vehicle and never mix hard water in the coolant filled at the factory. An improper coolant mixture can result in serious malfunction or engine damage.
*3	Drive belts (Engine)	• Adjust alternator, water pump and air conditioner (if equipped) drive belt. Inspect and if necessary repair or replace. • Inspect drive belt tensioner, idler and alternator pulley and if necessary correct or replace.
*4	Spark plug	For your convenience, it can be replaced prior to it's interval when you do maintenance of other items.
*5	Manual transmission fluid	Manual transmission fluid should be changed anytime it has been submerged in water.

NO.	ITEM	REMARK
*6	Fuel additives (Gasoline)	Kia recommends that you use unleaded gasoline which has an octane rating of RON (Research Octane Number) 95 / AKI (Anti Knock Index) 91 or higher (for Europe) or Octane Rating of RON (Research Octane Number) 91 / AKI (Anti-Knock Index) 87 or higher (except Europe). For customers who do not use good quality gasolines including fuel additives regularly, and have problems starting or the engine does not run smoothly, one bottle of additives added to the fuel tank at every 15,000 km (10,000 miles) (for Europe, Australia and New Zealand)/ 10,000 km (6,500 miles) (except Europe, Australia and New Zealand, China) / 5,000 km (3,000 miles) (for China). Additives are available from a professional workshop along with information on how to use them. Kia recommends to visit an authorized Kia dealer/service partner. Do not mix other additives.

MAINTENANCE INTERVALS		Normal Maintenance Schedule - For Gasoline Engine [Except Europe (Including Russia)]							
		Number of months or driving distance, whichever comes first							
MAINTENANCE ITEM	Months	12	24	36	48	60	72	84	96
	Miles×1,000	10	20	30	40	50	60	70	80
	Km×1,000	15	30	45	60	75	90	105	120
Engine oil and engine oil filter *1	Smartstream G1.2	Except Middle East, Central & South America, India, Libia, Iran, Algeria, Sudan, Morocco, Tunisia, Egypt, China : Replace every 15,000 km (10,000 miles) or 12 months For Middle East, Central & South America, India, Libia, Iran, Algeria, Sudan, Morocco, Tunisia, Egypt : Replace every 10,000 km (6,500 miles) or 12 months For China : Replace every 5,000 km (3,000 miles) or 6 months							
	(Gasoline engine) 1.4 MPI								
Coolant (Engine) *2		At first, Replace 210,000 km (140,000 miles) or 120 months after that, Replace every 30,000 km (20,000 miles) or 24 months							
Drive belts (Engine) *3		At first, Inspect 90,000 km (60,000 miles) or 72 months after that, Inspect every 30,000 km (20,000 miles) or 24 months							
Vacuum hoses and crankcase ventilation hoses		-	I	-	I	-	I	-	I
Spark plugs *4	Smartstream G1.2 (Unleaded)	Replace every 150,000 km (100,000 miles)							
	(Gasoline engine) 1.4 MPI (Unleaded)	Replace every 150,000 km (100,000 miles)							
	Smartstream G1.2 (Leaded)	Replace every 30,000 km (20,000 miles)							
	(Gasoline engine) 1.4 MPI (Leaded)	Replace every 30,000 km (20,000 miles)							
Manual transmission fluid *5		-	-	-	I	-	-	-	I

MAINTENANCE INTERVALS		Normal Maintenance Schedule – For Gasoline Engine [Except Europe (Including Russia)]							
		Number of months or driving distance, whichever comes first							
MAINTENANCE ITEM	Months	12	24	36	48	60	72	84	96
	Miles×1,000	10	20	30	40	50	60	70	80
	Km×1,000	15	30	45	60	75	90	105	120
Automatic transmission fluid	6 A/T	No check, No service required							
Drive shaft and boots		–	I	–	I	–	I	–	I
Fuel additives (Gasoline) *6		Add every 10,000 km (6,500 miles) or 6months (For Australia and New Zealand : Add every 15,000 km (10,000 miles) or 12months, For China : Add every 5,000 km (3,000 miles) or 6months)							
Fuel filter (Gasoline) *7	For China, Brazil	–	I	–	R	–	I	–	R
Fuel lines, hoses and connections		–	–	–	I	–	–	–	I
Fuel tank air filter	For China	I	I	R	I	I	R	I	I
	Except China	–	I	–	R	–	I	–	R
Fuel tank and fuel cap		–	–	–	I	–	–	–	I
Air cleaner filter	Except China, India, Middle East	I	I	R	I	I	R	I	I
	For China, India, Middle East	R	R	R	R	R	R	R	R
Exhaust system		I	I	I	I	I	I	I	I
Cooling system		At first, Inspect 60,000 km (40,000 miles) or 48 months after that, Inspect every 30,000 km (20,000 miles) or 24 months							
Air conditioner compressor/refrigerant		I	I	I	I	I	I	I	I
Climate control air filter	Except Australia and New Zealand	R	R	R	R	R	R	R	R
	For Australia and New Zealand	I	R	I	R	I	R	I	R
Brake discs and pads		I	I	I	I	I	I	I	I

MAINTENANCE INTERVALS	Normal Maintenance Schedule – For Gasoline Engine [Except Europe (Including Russia)]							
	Number of months or driving distance, whichever comes first							
MAINTENANCE ITEM	Months	12	24	36	48	60	72	84	96
	Miles×1,000	10	20	30	40	50	60	70	80
	Km×1,000	15	30	45	60	75	90	105	120
Brake drums and linings		–	I	–	I	–	I	–	I
Brake lines, hoses and connections		I	I	I	I	I	I	I	I
Brake/clutch fluid		I	I	R	I	I	R	I	I
Parking brake		–	I	–	I	–	I	–	I
Steering gear rack, linkage and boots		I	I	I	I	I	I	I	I
Suspension ball joints		I	I	I	I	I	I	I	I
Tire (pressure & tread wear)		I	I	I	I	I	I	I	I
Battery condition		I	I	I	I	I	I	I	I

I : Inspect and if necessary, adjust, correct, clean or replace.

R : Replace or change.

Maintenance Under Severe Usage Conditions – For Gasoline Engine [Except Europe (Including Russia)]

MAINTENANCE ITEM			MAINTE-NANCE OPERATION	MAINTENANCE INTERVALS	DRIVING CONDITION
Engine oil and engine oil filter	Smartstream G1.2, (Gasoline engine) 1.4 MPI	Except Middle East, Central & South America, India, Libia, Iran, Algeria, Sudan, Morocco, Tunisia, Egypt, China	R	Every 7,500 km (5,000 miles) or 6 months	A, B, C, D, E, F, G, H, I, J, K, L
		For Middle East, Central & South America, India, Libia, Iran, Algeria, Sudan, Morocco, Tunisia, Egypt	R	Every 5,000 km (3,000 miles) or 6 months	A, B, C, D, E, F, G, H, I, J, K, L
		For China	R	Every 5,000 km (3,000 miles) or 3 months	A, B, C, D, E, F, G, H, I, J, K, L
Spark plugs			R	Replace more frequently depending on the condition	A, B, F, G, H, I, K
Manual transmission fluid			R	Every 120,000 km (80,000 miles)	C, D, E, F, G, H, I, J
Automatic transmission fluid			R	Every 100,000 km (65,000 miles)	A, C, D, E, F, G, H, I, K
Drive shaft and boots			I	Inspect more frequently depending on the condition	C, D, E, F, G, H, I, J
Air cleaner filter			R	Replace more frequently depending on the condition	C, E

MAINTENANCE ITEM	MAINTE-NANCE OPERATION	MAINTENANCE INTERVALS	DRIVING CONDITION
Climate control air filter	R	Replace more frequently depending on the condition	C, E, G
Brake discs, pads and calipers	I	Inspect more frequently depending on the condition	C, D, E, G, H
Brake drums and linings	I	Inspect more frequently depending on the condition	C, D, E, G, H
Parking brake	I	Inspect more frequently depending on the condition	C, D, G, H
Steering gear rack, linkage and boots	I	Inspect more frequently depending on the condition	C, D, E, F, G
Suspension ball joints	I	Inspect more frequently depending on the condition	C, D, E, F, G

Maintenance operation

I : Inspect and if necessary, adjust, correct, clean or replace.
R : Replace or change.

Severe driving conditions

A : Repeatedly driving short distance of less than 8 km (5 miles) in normal temperature or less than 16 km (10 miles) in freezing temperature.

B : Extensive engine idling or low speed driving for long distances.

C : Driving on rough, dusty, muddy, unpaved, graveled or salt-spread roads.

D : Driving in areas using salt or other corrosive materials or in very cold weather

E : Driving in heavy dust condition.

F : Driving in heavy traffic area.

G : Driving on uphill, downhill, or mountain roads repeatedly.

H : Using for towing or camping and driving with loading on the roof.

I : Driving for patrol car, taxi, other commercial use of vehicle towing.

J : Frequently driving under high speed or rapid acceleration/deceleration.

K : Frequently driving in stop-and-go conditions.

L : Engine oil usage which is not recommended (Mineral type, Semisynthetic, Lower grade spec, etc.)

Explanation of scheduled maintenance items

Engine oil and filter

The engine oil and filter should be changed at the intervals specified in the maintenance schedule. If the vehicle is being driven in severe conditions, more frequent oil and filter changes are required.

Drive belts

Inspect all drive belts for evidence of cuts, cracks, excessive wear or oil saturation and replace if necessary. Drive belts should be checked periodically for proper tension and adjusted as necessary.

⚠ CAUTION

When you are inspecting the belt, place the ignition switch in the LOCK/OFF or ACC position.

Fuel filter (for gasoline)

Kia gasoline vehicle is equipped a lifetime fuel filter that integrated with the fuel tank. Regular maintenance or replacement is not needed but depends on fuel quality. If there are some important safety matters like fuel flow restriction, surging, loss of power, hard starting problem etc, fuel filter inspection or replace is needed.

Have the fuel filter inspected or replaced by a professional workshop. Kia recommends to visit an authorized Kia dealer/service partner.

Fuel lines, fuel hoses and connections

Check the fuel lines, fuel hoses and connections for leakage and damage. Have the fuel lines, fuel hoses and connections replaced by a professional workshop. Kia recommends to visit an authorized Kia dealer/service partner.

Vapor hose (for gasoline engine) and fuel filler cap

The vapor hose and fuel filler cap should be inspected at those intervals specified in the maintenance schedule. Make sure that a new vapor hose or fuel filler cap is correctly replaced.

Vacuum crankcase ventilation hoses (if equipped)

Inspect the surface of hoses for evidence of heat and/or mechanical damage. Hard and brittle rubber, cracking, tears, cuts, abrasions, and excessive swelling indicate deterioration. Particular attention should be paid to examine those hose surfaces nearest to high heat sources, such as the exhaust manifold.

Inspect the hose routing to assure that the hoses do not come in contact with any heat source, sharp edges or moving component which might cause heat damage or mechanical wear. Inspect all hose connections, such as clamps and couplings, to make sure they are secure, and that no leaks are present. Hoses should be replaced immediately if there is any evidence of deterioration or damage.

Air cleaner filter

Have the air cleaner filter replaced by a professional workshop. Kia recommends to visit an authorized Kia dealer/service partner.

Spark plugs (for gasoline, FFV engine)

Make sure to install new spark plugs of the correct heat range.

⚠ CAUTION

When assembling parts, be sure to wipe the inside and outside of the boot bottom of the ignition coil and the insulator of the spark plug with a soft cloth to prevent contamination of the spark plug insulator.

⚠ WARNING

Do not disconnect and inspect spark plugs when the engine is hot. You may burn yourself.

Valve clearance (for Smartstream G1.0 T-GDi, Smartstream G1.0 T-GDi 48V HEV)

Inspect for excessive valve noise and/or engine vibration and adjust if necessary. In this case, have the system serviced by a professional workshop. Kia recommends to visit an authorized Kia dealer/service partner.

Cooling system

Check the cooling system components, such as the radiator, coolant reservoir, hoses and connections for leakage and damage. Replace any damaged parts.

Coolant

The coolant should be changed at the intervals specified in the maintenance schedule.

Manual transmission fluid (if equipped)

Inspect the manual transmission fluid according to the maintenance schedule.

Intelligent manual transmission (iMT) system actuator fluid (if equipped)

Inspect the intelligent manual transmission system actuator fluid according to the maintenance schedule.

Automatic transmission fluid (if equipped)

Automatic transmission fluid should not be checked under normal usage conditions.

Have the automatic transmission fluid changed by a professional workshop according to the maintenance schedule. Kia recommends to visit an authorized Kia dealer/service partner.

✻ NOTICE

Automatic transmission fluid color is basically red.
As the vehicle is driven, the automatic transmission fluid will begin to look darker. It is normal condition and you should not judge the need to replace the fluid based upon the changed color.

⚠ CAUTION

The use of a non-specified fluid could result in transmission malfunction and failure.

Use only specified automatic transmission fluid. (Refer to "Recommended lubricants and capacities" on page 8-8".)

Dual clutch transmission fluid (if equipped)

Inspect the dual clutch transmission fluid according to the maintenance schedule.

Brake hoses and lines

Visually check for proper installation, chafing, cracks, deterioration and any leakage. Replace any deteriorated or damaged parts immediately.

Brake/Clutch fluid (if equipped)

Check the brake/clutch fluid level in the brake/clutch fluid reservoir. The level should be between "MIN" and "MAX" marks on the side of the reservoir. Use only hydraulic brake/clutch fluid conforming to DOT 3 or DOT 4 specification.

Parking brake

Inspect the parking brake system including the parking brake lever (or pedal) and cables.

Brake discs, pads and calipers

Check the pads for excessive wear, discs for run out and wear, and calipers for fluid leakage.

For more information on checking the pads or lining wear limit, we recommend to refer to the Kia web site.
(**www.KIA-hotline.com**)

Suspension mounting bolts

Check the suspension connections for looseness or damage. Retighten to the specified torque.

Steering gear box, linkage & boots/ lower arm ball joint

With the vehicle stopped and engine off, check for excessive free-play in the steering wheel.

Check the linkage for bends or damage. Check the dust boots and ball joints for deterioration, cracks, or damage. Replace any damaged parts.

Drive shafts and boots

Check the drive shafts, boots and clamps for cracks, deterioration, or damage. Replace any damaged parts and, if necessary, repack the grease.

Air conditioning refrigerant (if equipped)

Check the air conditioning lines and connections for leakage and damage.

Engine oil (Gasoline)

Checking the engine oil level

Engine oil is used for lubricating, cooling, and operating various hydraulic components in the engine. Engine oil consumption while driving is normal, and it is necessary to check and refill the engine oil regularly. Also, check and refill the oil level within the recommended maintenance schedule to prevent deterioration of oil performance.

Check the engine oil following the below procedure.

Smartstream G1.0 T-GDi /Smartstream G1.0 T-GDi 48V HEV

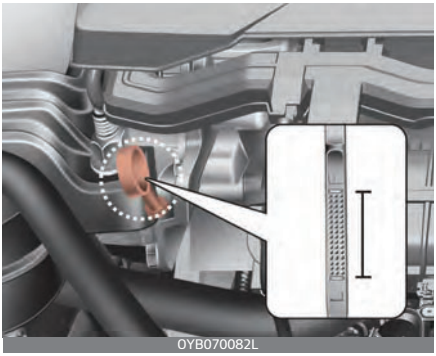

Smartstream G1.2

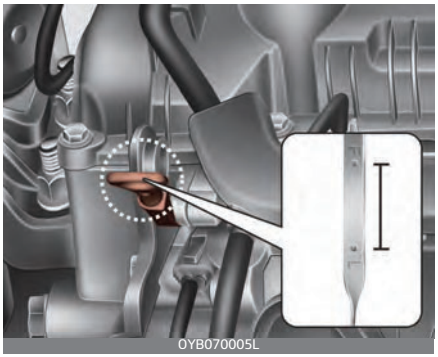

(Gasoline engine) 1.4 MPI

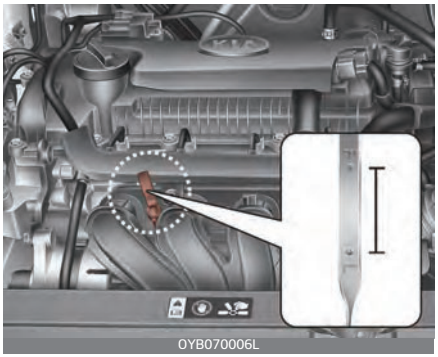

1. Be sure the vehicle is on level ground.
2. Start the engine and allow it to reach normal operating temperature.
3. Turn the engine off, remove the oil filler cap and pull the dipstick out. Wait for 15 minutes for the oil to return to the oil pan.
4. Wipe the dipstick clean and re-insert it fully.

5. Pull the dipstick out again and check the level. Check if the oil level is between the F-L line, and if it is below the L line, add enough oil to bring the level to F line.

⚠ WARNING

Radiator hose

Be very careful not to touch the radiator hose when checking or adding the engine oil as it may be hot enough to burn you.

⚠ CAUTION

When you wipe the oil level gauge, you should wipe it with a clean cloth. When mixed with debris, it can cause engine damage.

Smartstream G1.0 T-GDi / Smartstream G1.0 T-GDi 48V HEV

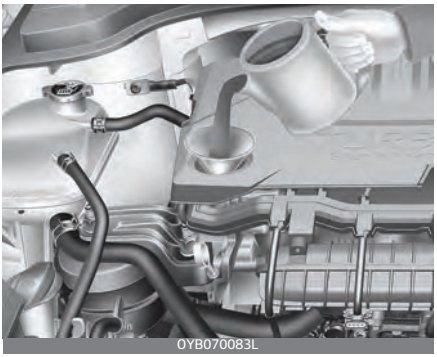

Smartstream G1.2

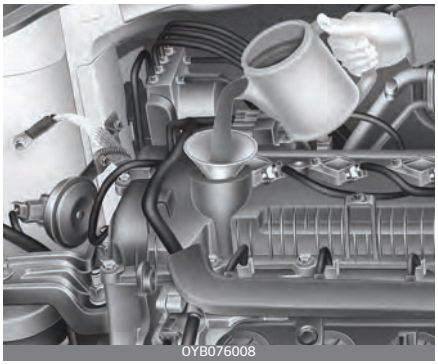

(Gasoline engine) 1.4 MPI

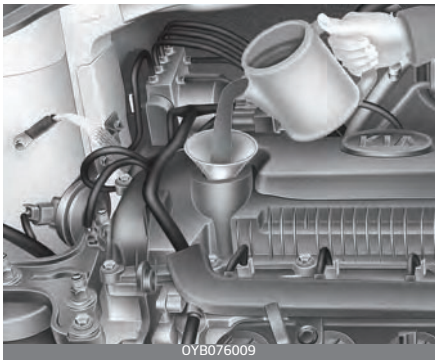

Use a funnel to help prevent oil from being spilled on engine components.

Use only the specified engine oil. (Refer to "Recommended lubricants and capacities" on page 8-8.)

- Do not spill engine oil when adding or changing engine oil. Wipe off spilled oil immediately.
- The engine oil consumption may increase while you break in a new vehicle and it will be stabilized after driving 6,000 km (4,000 miles).

- The engine oil consumption can be affected by driving habits, climate conditions, traffic conditions, oil quality, etc. Therefore, it is recommended that you inspect the engine oil level regularly and refill it if necessary.

Changing the engine oil and filter

Have the engine oil and filter replaced by a professional workshop. Kia recommends to visit an authorized Kia dealer/service partner.

- If the maintenance schedule to replace engine oil is exceeded, the engine oil performance may deteriorate, and the engine condition may be affected. Therefore, replace the engine oil according to the maintenance schedule.
- To keep the engine in optimal condition, use the recommended engine oil and filter. If the recommended engine oil and filter are not used replace it according to the maintenance schedule under severe usage conditions.
- The purpose of the maintenance schedule for engine oil replacement is to prevent oil deterioration and it is irrelevant to oil consumption. Check and refill engine oil regularly.

⚠ WARNING

Used engine oil may cause skin irritation or cancer if left in contact with the skin for prolonged periods of time. Used engine oil contains chemicals that have caused cancer in laboratory animals. Always protect your skin by washing your hands thoroughly with soap and warm water as soon as possible after handling used oil.

Do not leave used engine oil within the reach of children.

✻ NOTICE

For Smartstream T-GDi engine

When the oil pressure is low due to insufficient engine oil, the Engine Oil Pressure () warning light will illuminate. In addition, the enhanced engine protection system, which limits the engine's power is activated and the Malfunction Indicator Lamp () will illuminate when the vehicle is driven in this state continuously.

When oil pressure is restored, the Engine Oil Pressure warning light will turn off and the engine power will no longer be limited.

⚠ CAUTION

The engine oil is very hot immediately after the vehicle has been driven and can cause burns during replacement. Replace the engine oil after the engine oil has cooled down.

Engine Coolant

The high-pressure cooling system has a reservoir filled with year round antifreeze coolant. The reservoir is filled at the factory

Check the antifreeze protection and coolant level at least once a year, at the beginning of the winter season, and before traveling to a colder climate.

⚠ CAUTION

- When the engine overheats from low engine coolant, suddenly adding engine coolant may cause cracks in the engine. To prevent damage, add engine coolant slowly in small quantities.
- Do not drive with no engine coolant. It may cause water pump failure and engine seizure, etc.

Checking the coolant level

⚠ WARNING



Removing radiator cap

•Never attempt to remove the radiator cap while the engine is operating or hot. Doing so might lead to cooling system and engine damage. Also, hot coolant or steam could cause serious personal injury.

- Turn the engine off and wait until it cools down. Use extreme care when removing the radiator cap. Wrap a thick towel around it, and turn it counterclockwise slowly to the first stop. Step back while the pressure is released from the cooling system.
  When you are sure all the pressure has been released, press down on the cap, using a thick towel, and continue turning counterclockwise to remove it.
- Even if the engine is not operating, do not remove the radiator cap or the drain plug while the engine and radiator are hot. Hot coolant and steam may still blow out under pressure, causing serious injury.

⚠ WARNING



The electric motor (cooling fan) is controlled by engine coolant temperature, refrigerant pressure and vehicle speed. It may sometimes operate even when the engine is not running. Use extreme caution when working near the blades of the cooling fan so that you are not injured by a rotating fan blades. As the engine coolant temperature decreases, the electric motor will automatically shut off. This is a normal condition.

Smartstream G1.0 T-GDi / Smartstream G1.0 T-GDi 48V HEV

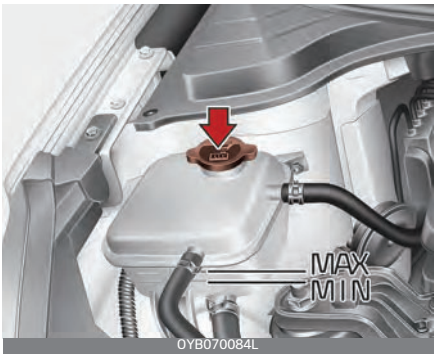

Smartstream G1.2/(Gasoline engine) 1.4 MPI

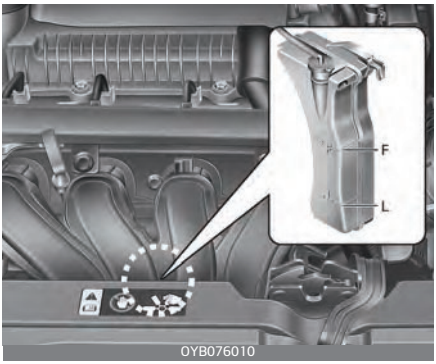

Check the condition and connections of all cooling system hoses and heater hoses. Replace any swollen or deteriorated hoses.

The coolant level should be filled between MAX and MIN (F and L) marks on the side of the coolant reservoir when the engine is cool.

If the coolant level is low, add enough distilled (deionized) or soft water. Bring the level to MAX (F), but do not overfill.

If frequent additions are required, have the system inspected by a professional workshop. Kia recommends to visit an authorized Kia dealer/service partner.

Recommended engine coolant

- When adding coolant, use only deionized water or soft water for your vehicle and never mix hard water in the coolant filled at the factory. An improper coolant mixture can result in serious malfunction or engine damage.
- The engine in your vehicle has aluminum engine parts and must be protected by an ethylene-glycol with phosphate based coolant to prevent corrosion and freezing.
- DO NOT USE alcohol or methanol coolant or mix them with the specified coolant.
- Do not use a solution that contains more than 60% antifreeze or less than 35% antifreeze, which would reduce the effectiveness of the solution.

For mixture percentage, refer to the following table.

Ambient Temperature	Mixture Percentage (volume)	
	Antifreeze	Water
-15°C (5°F)	35	65
-25°C (-13°F)	40	60
-35°C (-31°F)	50	50
-45°C (-49°F)	60	40

Smartstream G1.0 T-GDi / Smartstream G1.0 T-GDi 48V HEV

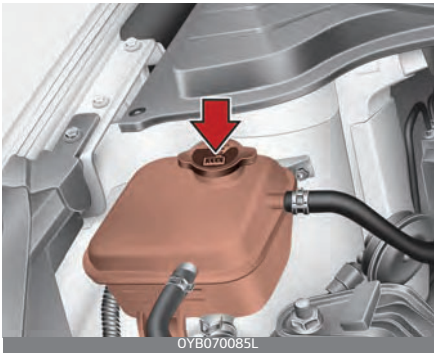

Smartstream G1.2/(Gasoline engine) 1.4 MPI

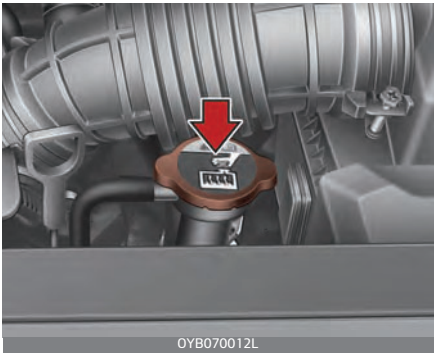

⚠ WARNING

Radiator cap

Do not remove the radiator cap when the engine and radiator are hot. Scalding hot coolant and steam may blow out under pressure causing serious injury.

Changing the coolant

Have the coolant replaced by a professional workshop. Kia recommends to visit an authorized Kia dealer/service partner.

⚠ CAUTION

Put a thick cloth around the radiator cap before refilling the coolant in order to prevent the coolant from overflowing into engine parts such as the alternator.

⚠ WARNING

Coolant

- Do not use radiator coolant or antifreeze in the washer fluid reservoir.
- Radiator coolant can severely obscure visibility when sprayed on the windshield and may cause loss of vehicle control or damage the paint and body trim.

Brake/clutch fluid (if equipped)

Checking the brake/clutch fluid level

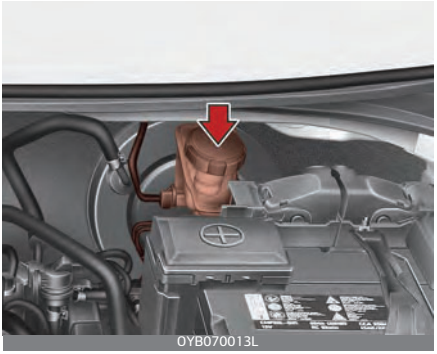

Check the fluid level in the reservoir periodically. The fluid level should be between MAX and MIN marks on the side of the reservoir.

Before removing the reservoir cap and adding brake/clutch fluid, clean the area around the reservoir cap thoroughly to prevent brake/clutch fluid contamination.

Periodically check that the fluid level in the brake fluid reservoir is between MIN and MAX. The level will fall with accumulated mileage. This is a normal condition associated with the wear of the brake linings.

If the fluid level is excessively low, have the system checked by a professional workshop. Kia recommends to visit an authorized Kia dealer/service partner.

Use only the specified brake fluid. (Refer to "Recommended lubricants and capacities" on page 8-8.)

Never mix different types of fluid.

⚠ WARNING

Loss of brake/clutch fluid

In the event the brake/clutch system requires frequent additions of fluid, have the system Inspected by a professional workshop. Kia recommends to visit an authorized Kia dealer/service partner.

⚠ WARNING

Brake / clutch fluid

When changing and adding brake/clutch fluid, handle it carefully. Do not let it come in contact with your eyes. If brake/clutch fluid should come in contact with your eyes, immediately flush them with a large quantity of fresh tap water. Have your eyes examined by a doctor as soon as possible.

⚠ CAUTION

Do not allow brake/clutch fluid to contact the vehicle's body paint, as paint damage will result. Brake/clutch fluid, which has been exposed to open air for an extended time should never be used as its quality cannot be guaranteed. It should be

properly disposed. Don't put in the wrong kind of fluid. A few drops of mineral-based oil, such as engine oil, in your brake/ clutch system can damage brake/clutch system parts.

⚠ CAUTION

To maintain your vehicle's best brake and ABS/ESC performance, use Kia genuine brake fluid as in the specification. (Classification : SAE J1704 DOT4 LV, ISO4925 CLASS-6, FMVSS116 DOT-4)

Intelligent manual transmission (iMT) system actuator fluid (if equipped)

Checking the intelligent manual transmission (iMT) system actuator fluid level

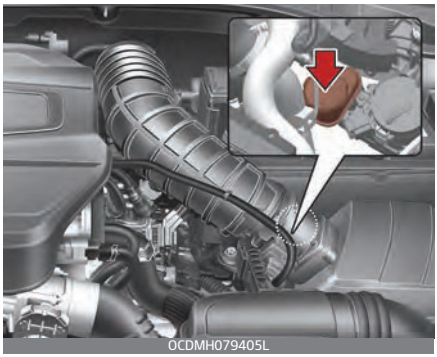

In normal driving conditions, the actuator fluid level does not go down rapidly.

However, oil consumption rate may rise as vehicle mileage increases, and leakage in actuator related parts may result in increased consumption of the iMT system actuator oil. Regularly check and make sure the iMT system actuator oil fluid level is between MIN and MAX marks.

If the oil level is below MIN mark, have the vehicle checked by a professional workshop. Kia recommends to visit an authorized Kia dealer/service partner.

Use only the specified iMT system actuator fluid. (Refer to "Recommended lubricants and capacities" on page 8-8.) Never mix different types of fluid.

✻ NOTICE

Loss of iMT system actuator fluid

In the event the iMT system actuator requires frequent additions of fluid, have the system inspected by a professional workshop.

Kia recommends to visit an authorized Kia dealer/service partner.

✻ NOTICE

iMT system actuator fluid

When changing and adding iMT system actuator fluid, handle it carefully.

Do not let it come in contact with your eyes.

If iMT system actuator fluid should come in Contact with your eyes, immediately flush them with a large quantity of fresh tap water.

Have your eyes examined by a doctor as soon as possible.

⚠ CAUTION

Do not allow iMT system actuator fluid to contact the vehicle's body paint, as paint damage will result.

The iMT system actuator fluid, which has been exposed to open air for an extended time should never be used as its quality cannot be guaranteed. It should be properly disposed.

Don't put in the wrong kind of fluid. A few drops of mineral based oil, such as engine oil, in your iMT system actuator can damage iMT system actuator parts.

Washer fluid

Checking the washer fluid level

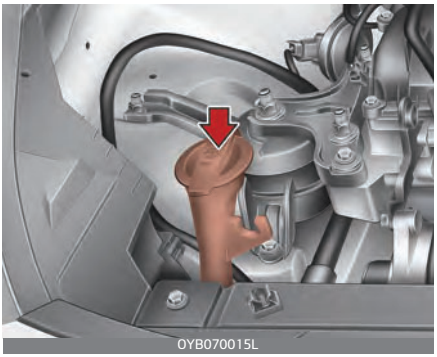

The reservoir is translucent so that you can check the level with a quick visual inspection.

Check the fluid level in the washer fluid reservoir and add fluid if necessary. Plain water may be used if washer fluid is not available. However, use washer solvent with antifreeze characteristics in cold climates to prevent freezing.

⚠ WARNING

Coolant

- Do not use radiator coolant or antifreeze in the washer fluid reservoir.
- Radiator coolant can severely obscure visibility when sprayed on the windshield and may cause loss of vehicle control or damage to paint and body trim.
- Windshield Washer fluid agents contain some amounts of alcohol and can be flammable under certain circumstances. Do not allow sparks or flame to contact the washer fluid or the washer fluid reservoir. Damage to the vehicle or occupants could occur.
- Windshield washer fluid is poisonous to humans and animals. Do not drink and avoid contacting windshield washer fluid. Serious injury or death could occur.

Parking brake

Checking the parking brake


OYB070016L

Check the stroke of the parking brake by counting the number of "clicks" heard while fully applying it from the released position. Also, the parking brake alone should securely hold the vehicle on a fairly steep grade. If the stroke is more or less than specified, have the system serviced by a professional workshop. Kia recommends to visit an authorized Kia dealer/service partner.

Stroke : 5~7 "clicks" at a force of 20 kg (44 lbs, 196 N).

Air cleaner

Filter replacement

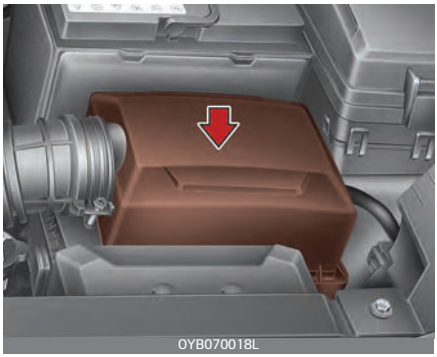
OYB070018L

It must be replaced when necessary, and should not be washed.

You can clean the filter when inspecting the air cleaner element.

Clean the filter by using compressed air.

1. Loosen the air cleaner cover attaching clips and open the cover.

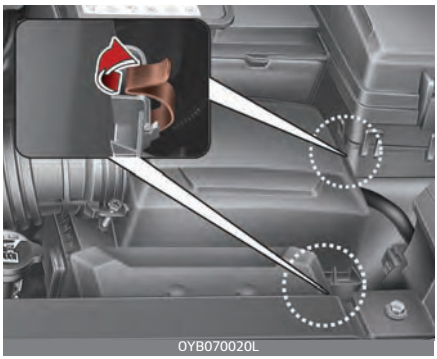
OYB070020L

2. Wipe the inside of the air cleaner.
3. Replace the air cleaner filter.

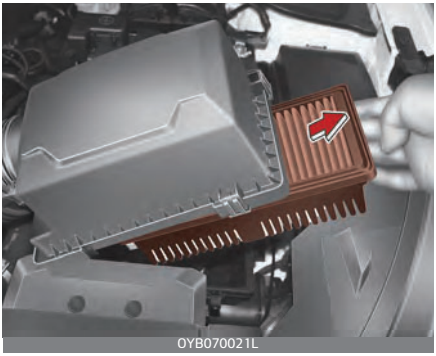
OYB070021L

4. Lock the cover with the cover attaching clips.

Replace the filter according to the Maintenance Schedule.

If the vehicle is operated in extremely dusty or sandy areas, replace the element more often than the usual recommended intervals. (Refer to "Scheduled maintenance service" on page 7-11".)

⚠ CAUTION

- Do not drive with the air cleaner removed; this will result in excessive engine wear.
- When removing the air cleaner filter, be careful that dust or dirt does not enter the air intake, or damage may result.
- Use parts for replacement from a professional workshop. Kia recommends to visit an authorized Kia dealer/service partner.

Climate control air filter

Filter inspection

The climate control air filter should be replaced according to the maintenance schedule. If the vehicle is operated in severely air-polluted cities or on dusty rough roads for a long period, it should be inspected more frequently and replaced earlier. When you replace the climate control air filter, replace it performing the following procedure, and be careful to avoid damaging other components.

1. Open the glove box and remove the stoppers on both sides.


OYB070022L

2. With the glove box open, pull the support strap (1).

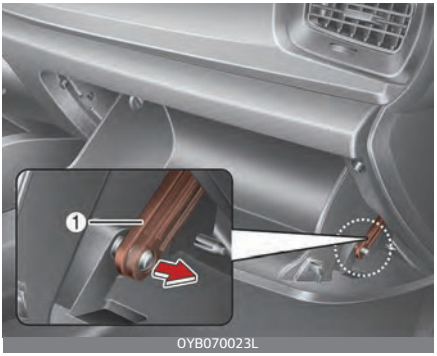

OYB070023L

3. Remove the climate control air filter cover while pressing the lock on the right side of the cover.


OYB070024L

4. Replace the climate control air filter.


OJA070096

5. Reassemble in the reverse order of disassembly.

✻ NOTICE

When replacing the climate control air filter install it properly. Otherwise, the system may produce noise and the effectiveness of the filter may be reduced.

Wiper blades

Blade inspection

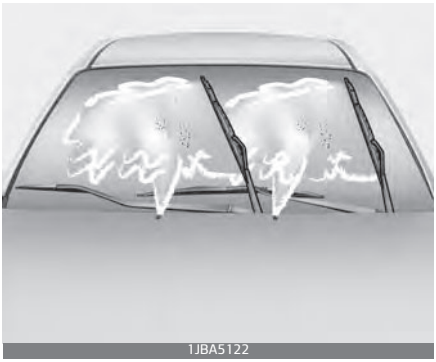

NOTICE

Commercial hot waxes applied by automatic car washes have been known to make the windshield difficult to clean.

Contamination of either the windshield or the wiper blades with foreign matter can reduce the effectiveness of the windshield wipers. Common sources of contamination are insects, tree sap, and hot wax treatments used by some commercial car washes. If the blades are not wiping properly, clean both the window and the blades with a good cleaner or mild detergent, and rinse thoroughly with clean water.

CAUTION

To prevent damage to the wiper blades, do not use gasoline, kerosene, paint thinner, or other solvents on or near them.

Blade replacement

When the wipers no longer clean adequately, the blades may be worn or cracked, and require replacement.

CAUTION

To prevent damage to the wiper arms or other components, do not attempt to move the wipers manually.

CAUTION

The use of a non-specified wiper blade could result in wiper malfunction and failure.

Front windshield wiper blade

Type A

1. Raise the wiper arm and turn the wiper blade assembly to expose the plastic locking clip.


ODEEV098013NR

⚠ CAUTION

Do not allow the wiper arm to fall against the windshield, since it may chip or crack the windshield.

2. Compress the clip and slide the blade assembly downward.

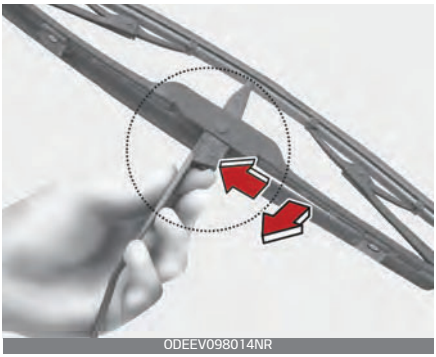
ODEEV098014NR

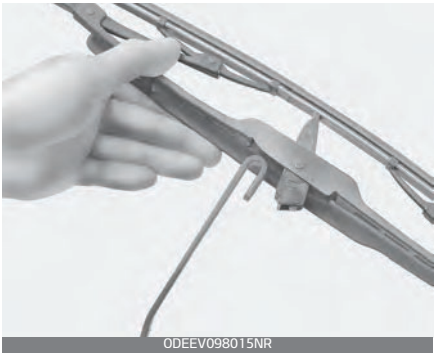
ODEEV098015NR

3. Lift it off the arm.
4. Install the blade assembly in the reverse order of removal.

Type B

1. Raise the wiper arm.


OYB070141L

⚠ CAUTION

Do not allow the wiper arm to fall against the windshield, since it may chip or crack the windshield.

2. Lift up the wiper blade clip (1). Then pull down the blade assembly (2) and remove it.

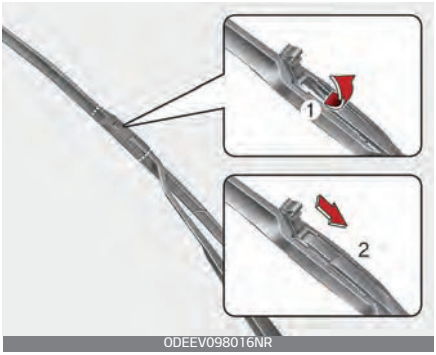

3. Install the new blade assembly.



Rear window wiper blade

1. Raise the wiper arm (1) and pull out the wiper blade assembly.

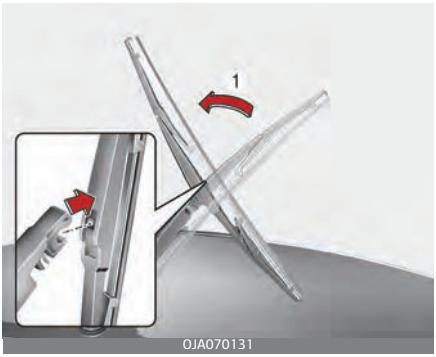

2. Install the new blade assembly by inserting the center part into the slot in the wiper arm until it clicks into place.



3. Make sure the blade assembly is installed firmly by trying to pull it slightly.

To prevent damage to the wiper arms or other components, have the wiper blade replaced by a professional workshop. Kia recommends to visit an authorized Kia dealer/service partner.

Battery

For best battery service

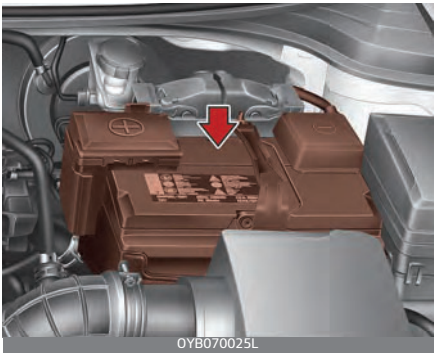
OYB070025L

- Keep the battery securely mounted.
- Keep the battery top clean and dry.
- Keep the terminals and connections clean, tight, and coated with petroleum jelly or terminal grease.
- Rinse any spilled electrolyte from the battery immediately with a solution of water and baking soda.
- If the vehicle is not going to be used for an extended time, disconnect the battery cables.

✻ NOTICE

Basically equipped battery is maintenance free type. If your vehicle is equipped with the battery marked with LOWER and UPPER on the side, you can check the electrolyte level. The electrolyte level should be between LOWER and UPPER. If the electrolyte level is low, should be added distilled (demineralized) water (Never add sulfuric acid or other electrolyte). When refill, be careful not to splash the battery and adjacent components. And do not overfill the battery cells. It can cause corrosion on other parts. After then ensure that tighten the cell caps. Contact a professional workshop. Kia recommends to visit an authorized Kia dealer/service partner.

⚠ WARNING

Battery dangers


Always read the following instructions carefully when handling a battery.


Keep lighted cigarettes and all other flames or sparks away from the battery.


Hydrogen, a highly combustible gas, is always present in battery cells and may explode if ignited.


Keep batteries out of the reach of children because batteries contain highly corrosive SULFURIC ACID. Do not allow battery acid to contact your skin, eyes, clothing or paint finish.


If any electrolyte gets into your eyes, flush your eyes with clean water for at least 15 minutes and get immediate medical attention.
If electrolyte gets on your skin, thoroughly wash the contacted area. If you feel pain or burning sensation, get medical attention immediately.


Wear eye protection when charging or working near a battery. Always provide ventilation when working in an enclosed space.


An inappropriately disposed battery can be harmful to the environment and human health. Dispose the battery according to your local law(s) or regulation.


The battery contains lead. Do not dispose of it after use. Contact a professional workshop. Kia recommends to visit an authorized Kia dealer/service partner.

- When lifting a plastic-cased battery, excessive pressure on the case may cause battery acid to leak, resulting in personal injury. Lift with a battery carrier or with your hands on opposite corners.
- Never attempt to recharge the battery when the battery cables are connected.
- The electrical ignition system works with high voltage. Never touch these components with the engine running or the ignition switched on.

Failure to follow the above warnings can result in serious bodily injury or death.

⚠ CAUTION

- When you don't use the vehicle for a long time in the low temperature area, separate the battery and keep it indoors.
- Always charge the battery fully to prevent battery case damage in low temperature area.
- If you connect unauthorized electronic devices to the battery, the battery may be discharged. Never use unauthorized devices.

Battery capacity label

Example



OUM074113L

* The actual battery label in the vehicle may differ from the illustration.

1. AGM90L-DIN : The Kia model name of battery
2. 90Ah(20HR) : The nominal capacity (in Ampere hours)
3. 170RC : The nominal reserve capacity (in min.)
4. 12V : The nominal voltage
5. 850CCA (SAE) : The cold-test current in amperes by SAE
6. 680A : The cold-test current in amperes by EN

Battery recharging

Your vehicle has a maintenance-free, calcium-based battery.

- If the battery becomes discharged in a short time (because, for example, the headlights or interior lights were left on while the vehicle was not in use), recharge it by slow charging (trickle) for 10 hours.
- If the battery gradually discharges because of high electric load while the vehicle is being used, recharge it at 20-30A for two hours.

⚠ WARNING

Recharging battery

When recharging the battery, observe the following precautions:

- The battery must be removed from the vehicle and placed in an area with good ventilation.
- Do not allow cigarettes, sparks, or flame near the battery.
- Watch the battery during charging, and stop or reduce the charging rate if the battery cells begin gassing (boiling) violently or if the temperature of the electrolyte of any cell exceeds 49°C (120°F).
- Wear eye protection when checking the battery during charging.
- Disconnect the battery charger in the following order.

1. Turn off the battery charger main switch.
2. Unhook the negative clamp from the negative battery terminal.
3. Unhook the positive clamp from the positive battery terminal.

⚠ WARNING

- Before performing maintenance or recharging the battery, turn off all accessories and stop the engine.
- The negative battery cable must be removed first and installed last when the battery is disconnected.
- Operation related to the battery is recommended to be done by a professional workshop. Kia recommends to visit an authorized Kia dealer/service partner.

⚠ CAUTION

- Keep the battery away from water or any liquid.
- For your safety, use parts for replacement from a professional workshop. Kia recommends to visit an authorized Kia dealer/service partner.

⚠ CAUTION

AGM battery (if equipped)

- Absorbent Glass Mat (AGM) batteries are maintenance free and have the AGM battery serviced by a professional workshop. Kia recommends to visit an authorized Kia dealer/service partner.
  For charging your AGM battery, use only fully automatic battery chargers that are specially developed for AGM batteries.
- When replacing the AGM battery, use parts for replacement from a professional workshop. Kia recommends to visit an authorized Kia dealer/service partner.
- Do not open or remove the cap on top of the battery. This may cause leaks of internal electrolyte that could result in severe injury

Reset items

Items should be reset after the battery has been discharged or the battery has been disconnected.

- Auto up/down window
- Sunroof
- Trip computer
- Climate control system
- Audio

Tires and wheels

Tire care

For proper maintenance, safety, and maximum fuel economy, you must always maintain recommended tire inflation pressures and stay within the load limits and weight distribution recommended for your vehicle.

Recommended cold tire inflation pressures

All tire pressures (including the spare) should be checked when the tires are cold. “Cold Tires” means the vehicle has not been driven for at least three hours or driven less than 1.6 km (1 mile).

Recommended pressures must be maintained for the best ride, top vehicle handling, and minimum tire wear.

For recommended inflation pressure, refer to "Tires and wheels" on page 8-5“.

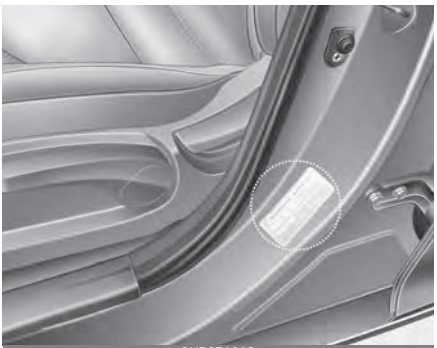
OUB071018

All specifications (sizes and pressures) can be found on a label attached to the driver's side center pillar.

⚠ WARNING

Tire under inflation

Severe under inflation (70 kPa (10 psi) or more) can lead to severe heat build-up, causing blowouts, tread separation and other tire failures that can result in the loss of vehicle control leading to severe injury or death. This risk is much higher on hot days and when driving for long periods at high speeds.

⚠ CAUTION

- Underinflation also results in excessive wear, poor handling and reduced fuel economy. Wheel deformation also is possible. Keep your tire pressures at the proper levels. If a tire frequently needs refilling, have the system checked by a professional workshop. Kia recommends to visit an authorized Kia dealer/service partner.
- Overinflation produces a harsh ride, excessive wear at the center of the tire tread, and a greater possibility of damage from road hazards.

⚠ CAUTION

- Warm tires normally exceed recommended cold tire pressures by 28 to 41 kPa (4 to 6 psi). Do not release air from warm tires to adjust the pressure or the tires will be under inflated.
- Be sure to reinstall the tire inflation valve caps. Without the valve cap, dirt or moisture could get into the valve core and cause air leakage. If a valve cap is missing, install a new one as soon as possible.

⚠ WARNING

Tire Inflation

Overinflation or under inflation can reduce tire life, adversely affect vehicle handling, and lead to sudden tire failure. This could result in loss of vehicle control and potential injury.

⚠ CAUTION

Tire pressure

Always observe the following:

- Check tire pressure when the tires are cold. (After vehicle has been parked for at least three hours or hasn't been driven more than 1.6 km (1 mile) since startup.)
- Check the pressure of your spare tire each time you check the pressure of other tires.
- Never overload your vehicle. Be careful not to overload a vehicle luggage rack if your vehicle is equipped with one.
- Worn, old tires can cause accidents. If your tread is badly worn, or if your tires have been damaged, replace them.

Checking tire inflation pressure

Check your tires once a month or more.

Also, check the tire pressure of the spare tire.

How to check

Use a good quality gauge to check tire pressure. You can not tell if your tires are properly inflated simply by looking at them. Radial tires may look properly inflated even when they're under inflated.

Check the tire's inflation pressure when the tires are cold. – "Cold" means your vehicle has been sitting for at least three hours or driven no more than 1.6 km (1 mile).

Remove the valve cap from the tire valve stem. Press the tire gauge firmly onto the valve to get a pressure measurement. If the cold tire inflation pressure matches the recommended pressure on the tire and loading information label, no further adjustment is necessary. If the pressure is low, add air until you reach the recommended amount.

If you overfill the tire, release air by pushing on the metal stem in the center of the tire valve. Recheck the tire pressure with the tire gauge. Be sure to put the valve caps back on the valve stems. They help prevent leaks by keeping out dirt and moisture.

⚠ WARNING

- Inspect your tires frequently for proper inflation as well as wear and damage. Always use a tire pressure gauge.
- Tires with too much or too little pressure wear unevenly causing poor handling, loss of vehicle control, and sudden tire failure leading to accidents, injuries, and even death. The recommended cold tire pressure for your vehicle can be found in this manual and on the tire label located on the driver's side center pillar.
- Worn tires can cause accidents. Replace tires that are worn, show uneven wear, or are damaged.
- Remember to check the pressure of your spare tire. Kia recommends that you check the spare every time you check the pressure of the other tires on your vehicle.

Tire rotation

To equalize tread wear, it is recommended that the tires be rotated every 10,000 km (6,500 miles) or sooner if irregular wear develops.

During rotation, check the tires for correct balance.

When rotating tires, check for uneven wear and damage. Abnormal wear is usually caused by incorrect tire pressure, improper wheel alignment, out of-balance wheels, severe braking or severe cornering. Look for bumps or bulges in the tread or side of tire. Replace the tire if you find either of these conditions. Replace the tire if fabric or cord is visible. After rotation, be sure to bring the front and rear tire pressures to specification and check lug nut tightness.

Refer to "Tires and wheels" on page 8-5.

With a full-size spare tire (Only the vehicle without TPMS system)

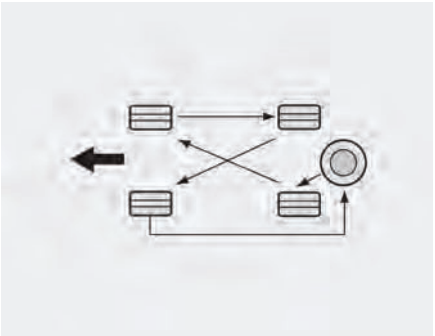

OYB070143L

Without a spare tire

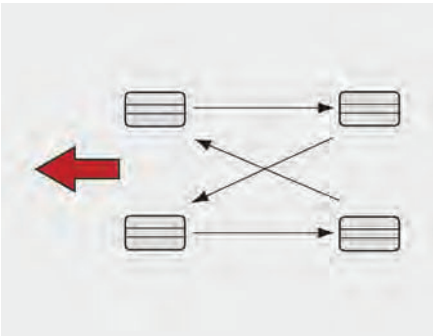

OJA070097

Directional tires (if equipped)

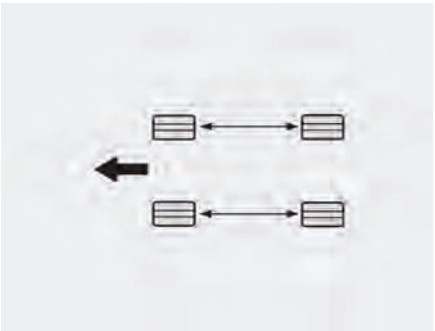

OYB070142L

Disc brake pads should be inspected for wear whenever tires are rotated.

✻ NOTICE

Rotate radial tires that have an asymmetric tread pattern only from front to rear and not from right to left.

⚠ WARNING

- Do not use the compact spare tire (if equipped) for tire rotation.
- Do not mix bias ply and radial ply tires under any circumstances. This may cause unusual handling characteristics that could result in death, severe injury, or property damage.

Wheel alignment and tire balance

The wheels on your vehicle were aligned and balanced carefully at the factory to give you the longest tire life and best overall performance.

In most cases, you will not need to have your wheels aligned again. However, if you notice unusual tire wear or your vehicle pulling one way or the other, the alignment may need to be reset.

If you notice your vehicle vibrating when driving on a smooth road,

your wheels may need to be rebalanced.

⚠ CAUTION

Improper wheel weights can damage your vehicle's aluminum wheels. Use only approved wheel weights.

Tire replacement



If the tire is worn evenly, a tread wear Indicator (A) will appear as a solid band across the tread. This shows there is less than 1.6 mm (1/16 in.) of tread left on the tire. Replace the tire when this happens.

Do not wait for the band to appear across the entire tread before replacing the tire.

✻ NOTICE

We recommend that when replacing tires, use the same originally supplied with the vehicles.

If not, that affects driving performance.

⚠ CAUTION

When replacing the tires, recheck and tighten the wheel nuts after driving about 50 km (31 miles) and recheck after driving about 1,000 km (620 miles). If the steering wheel shakes or the vehicle vibrates while driving, the tire is out of balance. Align the tire balance. If the problem is not solved, contact a professional workshop. Kia recommends to visit an authorized Kia dealer/service partner.

⚠ WARNING

Replacing tires

To reduce the chance of serious or fatal injuries from an accident caused by tire failure or loss of vehicle control:

- Replace tires that are worn, show uneven wear, or are damaged. Worn tires can cause loss of braking effectiveness, steering control, and traction.
- Do not drive your vehicle with too little or too much pressure in your tires. This can lead to uneven wear and tire failure.
- When replacing tires, never mix radial and bias-ply tires on the same car. You must replace all

tires (including the spare) if moving from radial to bias-ply tires.
- Using tires and wheels other than the recommended sizes could cause unusual handling characteristics and poor vehicle control, resulting in a serious accident.
- Wheels that do not meet Kia's specifications may fit poorly and result in damage to the vehicle or unusual handling and poor vehicle control.
- The ABS works by comparing the speed of the wheels. The tire size affects wheel speed. When replacing tires, all 4 tires must use the same size originally supplied with the vehicle. Using tires of a different size can cause the ABS (Anti-lock Brake System) and ESC (Electronic Stability Control) to work irregularly.
- It is best to replace all four tires at the same time. If that is not possible, or necessary, then replace the two front or two rear tires as a pair. Replacing just one tire can seriously affect your vehicle's handling.

Compact spare tire replacement (if equipped)

A compact spare tire has a shorter tread life than a regular size tire. Replace it when you can see the tread wear indicator bars on the tire. The replacement compact spare tire should be the same size and design tire as the one provided with your new vehicle and should be mounted on the same compact spare tire wheel. The compact spare tire is not designed to be mounted on a regular size wheel, and the compact spare tire wheel is not designed for mounting a regular size tire.

Wheel replacement

When replacing the metal wheels for any reason, make sure the new wheels are equivalent to the original factory units in diameter, rim width and offset.

⚠ WARNING

A wheel that is not the correct size may adversely affect wheel and bearing life, braking and stopping abilities, handling characteristics, ground clearance, body-to-tire clearance, snow chain clearance, speedometer and odometer calibration, headlight aim and bumper height.

Tire traction

Tire traction can be reduced if you drive on worn tires, tires that are improperly inflated or on slippery road surfaces. Tires should be replaced when tread wear indicators appear. Slow down whenever there is rain, snow or ice on the road to reduce the possibility of losing control of the vehicle.

Tire maintenance

In addition to proper inflation, correct wheel alignment helps to decrease tire wear. If you find a tire is worn unevenly, have a professional workshop check the wheel alignment. Kia recommends to visit an authorized Kia dealer/service partner.

When you have new tires installed, make sure they are balanced. This will increase vehicle ride comfort and tire life. Additionally, a tire should always be rebalanced if it is removed from the wheel.

Tire sidewall labeling

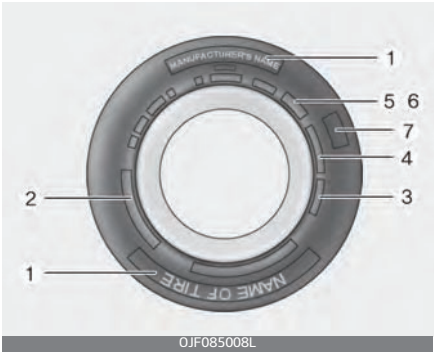

OJF085008L

This information identifies and describes the fundamental characteristics of the tire and also provides the tire identification number (TIN) for safety standard certification. The TIN can be used to identify the tire in case of a recall.

1. Manufacturer or brand name

Manufacturer or Brand name is shown.

2. Tire size designation

A tire's sidewall is marked with a tire size designation. You will need this information when selecting replacement tires for your vehicle. The following explains what the letters and numbers in the tire size designation mean.

Example tire size designation:

(These numbers are provided as an example only; your tire size desig-

nator could vary depending on your vehicle.)

P235/55R19 108T

P – Applicable vehicle type (tires marked with the prefix "P" are intended for use on passenger vehicles or light trucks; however, not all tires have this marking).

235 – Tire width in millimeters.

55 – Aspect ratio. The tire's section height as a percentage of its width.

R – Tire construction code (Radial).

19 – Rim diameter in inches.

108 – Load Index, a numerical code associated with the maximum load the tire can carry.

T – Speed Rating Symbol. See the speed rating chart in this section for additional information.

Wheel size designation

Wheels are also marked with important information that you need if you ever have to replace one. The following explains what the letters and numbers in the wheel size designation mean.

Example wheel size designation : 7.5JX19

7.5 – Rim width in inches.
J – Rim contour designation.
19 – Rim diameter in inches.

Tire speed ratings

The chart below lists many of the different speed ratings currently being used for passenger car tires. The speed rating is part of the tire size designation on the sidewall of the tire. This symbol corresponds to that tire's designed maximum safe operating speed.

Speed Rating Symbol	Maximum Speed
S	180 km/h (112 mph)
T	190 km/h (118 mph)
H	210 km/h (130 mph)
V	240 km/h (149 mph)
W	270 km/h (168 mph)
Y	300 km/h (186 mph)

3. Checking tire life (TIN : Tire Identification Number)

Any tires that are over 6 years old, based on the manufacturing date, (including the spare tire) should be replaced by new ones. You can find the manufacturing date on the tire sidewall (possibly on the inside of the wheel), displaying the DOT Code. The DOT Code is a series of numbers on a tire consisting of numbers and English letters. The manufacturing date is designated by the last four digits (characters) of the DOT code.

DOT : XXXX XXXX 0000

The front part of the DOT means a plant code number, tire size and tread pattern and the last four numbers indicate week and year manufactured.

For example:
DOT XXXX XXXX 1621 represents that the tire was produced in the 16th week of 2021.

⚠ WARNING

Tire age

Tires degrade over time, even when they are not being used.

Regardless of the remaining tread, we recommend that tires be replaced after approximately six (6) years of normal service. Heat caused by hot climates or frequent high loading conditions can accelerate the aging process. Failure to follow this warning can result in sudden tire failure, which could lead to a loss of control and an accident involving serious injury or death.

4. Tire ply composition and material

The number of layers or plies of rubber-coated fabric in the tire. Tire manufacturers also must indicate the materials in the tire, which include steel, nylon, polyester, and others. The letter "R" means radial ply construction; the letter "D" means diagonal or bias ply construction; and the letter "B" means belted-bias ply construction.

5. Maximum permissible inflation pressure

This number is the greatest amount of air pressure that should be put in the tire. Do not exceed the maximum permissible inflation pressure. Refer to the Tire and Loading Information label for recommended inflation pressure.

6. Maximum load rating

This number indicates the maximum load in kilograms and pounds that can be carried by the tire. When replacing the tires on the vehicle, always use a tire that has the same load rating as the factory installed tire.

7. Uniform tire quality grading

Quality grades can be found where applicable on the tire sidewall between tread shoulder and maximum section width.

For example:
TREADWEAR 200
TRACTION AA
TEMPERATURE A

Tread wear

The tread wear grade is a comparative rating based on the wear rate of the tire when tested under controlled conditions on a specified government test course. For example, a tire graded 150 would wear one-and-ahalf times (1½) as well on the government course as a tire graded 100.
The relative performance of tires depends upon the actual conditions of their use, however, and may depart significantly from the norm due to variations in driving habits, service practices and differences in road characteristics and climate.
These grades are molded on the side-walls of passenger vehicle tires. The tires available as standard or optional equipment on your vehicle may vary with respect to grade.

Traction – AA, A, B & C

The traction grades, from highest to lowest, are AA, A, B and C. Those grades represent the tire's ability to stop on wet pavement as measured under controlled conditions on specified government test surfaces of asphalt and concrete. A tire marked C may have poor traction performance.

Temperature –A, B & C

The temperature grades are A (the highest), B, and C, representing the tire's resistance to the generation of heat and its ability to dissipate heat when tested under controlled conditions on a specified indoor laboratory test wheel.
Sustained high temperature can cause the material of the tire to degenerate and reduce tire life, and excessive temperature can lead to sudden tire failure. Grades B and A represent higher levels of performance on the laboratory test wheel than the minimum required by law.

⚠ WARNING

The traction grade assigned to this tire is based on straight-ahead braking traction tests, and does not include acceleration, cornering, hydroplaning, or peak traction characteristics.

⚠ WARNING

Tire temperature

The temperature grade for this tire is established for a tire that is properly inflated and not overloaded. Excessive speed, underinflation, or excessive loading, either separately or in combination, can cause heat build-up and possible sudden tire failure. This can cause loss of vehicle control and serious injury or death.

Low aspect ratio tire (if equipped)

Low aspect ratio tires, whose aspect ratio is lower than 50, are provided for sporty looks.

Because the low aspect ratio tires are optimized for handling and braking, it may be more uncomfortable to ride in and there is more noise compare with normal tires.

⚠ CAUTION

Because the sidewall of the low aspect ratio tire is shorter than the normal, the wheel and tire of the low aspect ratio tire is easier to be damaged. So, follow the instructions below.

- When driving on a rough road or off road, drive cautiously because tires and wheels may be damaged. And after driving, inspect tires and wheels.
- When passing over a pothole, speed bump, manhole, or curb stone, drive slowly so that the tires and wheels are not damaged.
- If the tire is impacted, inspect the tire condition or contact a professional workshop. Kia recommends to visit an authorized Kia dealer/service partner.
- To prevent damage to the tire, inspect the tire condition and pressure every 3,000 km (1,900 miles).

⚠ CAUTION

- It is not easy to recognize the tire damage with your own eyes. But if there is the slightest hint of tire damage, even though you cannot see the tire damage with your own eyes, have the tire checked or replaced because the tire damage may cause air leakage from the tire.
- If the tire is damaged by driving on a rough road, off road, pothole, manhole, or curb stone, it will not be covered by the warranty.
- You can find out the tire information on the tire sidewall.

Fuses

Blade type



ODEEV098032NR

Cartridge type



ODEEV098077NR

Multi fuse



ODEEV098078NR

BFT



ODEEV098079NR

* Left side : Normal
  Right side : Blown

A vehicle's electrical system is protected from electrical overload damage by fuses.

This vehicle has 2 (or 3) fuse panels, one located in the driver's side panel bolster, the others in the engine compartment near the battery.

If any of your vehicle's lights, accessories, or controls do not work, check the appropriate circuit fuse. If a fuse has blown, the element inside the fuse will melt.

If the electrical system does not work, first check the driver's side fuse panel.

Before replacing a blown fuse, disconnect the negative battery cable.

Always replace a blown fuse with one of the same rating.

If the replacement fuse blows, this indicates an electrical problem. Avoid using the system involved and immediately consult a professional workshop. Kia recommends to consult an authorized Kia dealer/service partner.

Three kinds of fuses are used: blade type for lower amperage rating, cartridge type, and multi fuse for higher amperage ratings.

⚠ WARNING

Fuse replacement

- Never replace a fuse with anything but another fuse of the same rating.

- A higher capacity fuse could cause damage and possibly a fire.
- Never install a wire or aluminum foil instead of the proper fuse even as a temporary repair. It may cause extensive wiring damage and a possible fire.
- Do not arbitrarily modify or add-on electric wiring of the vehicle.

⚠ CAUTION

Do not use a screwdriver or any other metal object to remove fuses because it may cause a short circuit and damage the system.

✻ NOTICE

- When replacing fuse, turn the ignition "OFF" and turn off switches of all electrical devices then remove battery (-) terminal.
- The actual fuse/relay panel label may differ from equipped items.

⚠ CAUTION

- When replacing a blown fuse or relay with a new one, make sure the new fuse or relay fits tightly into the clips. The incomplete fastening fuse or relay may cause the vehicle wiring and electric systems damage and a possible fire.
- Do not remove fuses, relays and terminals fastened with bolts or nuts.The fuses, relays and terminals may be fastened incompletely, and it may cause a possible fire. If fuses, relays and terminals fastened with bolts or nuts are blown, consult a professional workshop. Kia recommends to consult an authorized Kia dealer/service partner.
- Do not input any other objects except fuses or relays into fuse/relay terminals such as a driver or wiring. It may cause contact failure and system malfunction.
- Do not plug in screwdrivers or after market wiring into the terminal originally designed for fuse and relays only. The electrical system and wiring of the vehicle interior may be damaged or burned due to contact failure.
- If you directly connect the wire on the taillight or replace the bulb which is over the regulated capacity to install trailers etc., the inner junction block can get burned.

⚠ CAUTION

Visually inspect the battery cap to ensure it is securely closed. If the battery cap is not securely closed, moisture may enter the system and damage the electrical components.

✻ NOTICE

Random wiring prohibited when retrofitting equipment

Use of random wiring in the vehicle might cause danger due to failure and damage of the vehicle's performance.

Using random wires especially when retrofitting infotainment or theft alarm system, remote engine control, car phone or radio might damage the vehicle or cause fire.

✻ NOTICE

Remodeling Prohibited

Do not try remodeling the vehicle in any way. It is illegal, and may affect the vehicle's performance, durability, and safety. Warranty is also not provided for problems caused by remodeling.

Be aware of safety problems caused by remodeling the vehicle with unauthorized electrical devices (lamp, black box, electrical equipment, diagnostic device, communication device, etc.). It might cause malfunction of the vehicle, wiring damage, battery discharge, connector damage, or fire. the vehicle or cause fire.

✻ NOTICE

Window tinting precaution

Window tint (especially metallic film) might cause communication disorder or poor radio reception, and malfunction of the automatic lighting system due to excessive change of illumination inside the vehicle. The solution used might also flow into electric, electronic devices causing disorder and failure.

Inner panel fuse replacement

1. Turn the ignition switch and all other switches off.
2. Open the fuse panel cover.


OYB070026L

3. Pull the suspected fuse straight out. Use the removal tool provided in the main fuse box in the engine compartment.

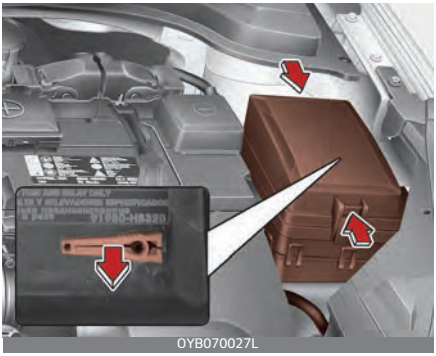
OYB070027L

4. Check the removed fuse; replace it if it is blown.
   Spare fuses are provided in the instrument panel fuse panel (or in the engine compartment fuse panel).
5. Push in a new fuse of the same rating, and make sure it fits tightly in the clips.

If it fits loosely, consult a professional workshop. Kia recommends to consult an authorized Kia dealer/ service partner.

If you do not have a spare, use a fuse of the same rating from a circuit you may not need for operating the vehicle, such as the cigarette lighter fuse.

If the headlights or taillights, stoplights, courtesy lamp, day time running lights (D.R.L) do not work and the fuses are OK, check the fuse panel in the engine compartment. If a fuse is blown, it must be replaced.

Memory fuse


OYB070037L

Your vehicle is equipped with a memory fuse to prevent battery discharge if your vehicle is parked without being operated for prolonged periods. Use the following procedures before parking the vehicle for prolonged periods.

1. Turn off the engine.
2. Turn off the headlights and tail lights.
3. Open the driver's side panel cover and pull up the memory fuse.

NOTICE

- If the memory fuse is pulled up from the fuse panel, the warning chime, audio, clock and interior lamps, etc., will not operate. Some items must be reset after replacement. Refer to "Battery" on page 7-49.
- Even when the memory fuse is pulled up, the battery can still be discharged by operation of the

headlights or other electrical devices.

Engine compartment fuse replacement

1. Turn the ignition switch and all other switches off.
2. Remove the fuse panel cover by pressing the tab and pulling the cover up. When the blade type fuse is disconnected, remove it by using the clip designed for changing fuses located in the engine room fuse box. Upon removal, securely insert reserve fuse of equal quantity.

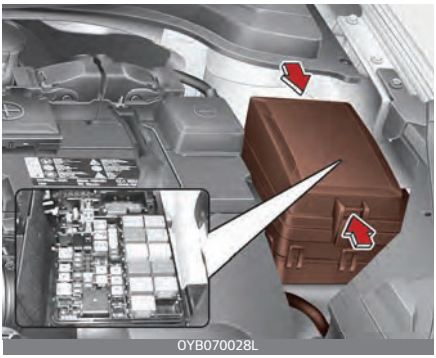
OYB070028L

3. Check the removed fuse; replace it if it is blown. To remove or insert the fuse, use the fuse puller in the engine compartment fuse panel.
4. Push in a new fuse of the same rating, and make sure it fits tightly in the clips. If it fits loosely, consult a professional workshop. Kia recommends to consult an authorized Kia dealer/service partner.

⚠ CAUTION

After checking the fuse panel in the engine compartment, securely install the fuse panel cover through the audible clicking sound.

If not, electrical failures may occur from water contact.

Multi fuse

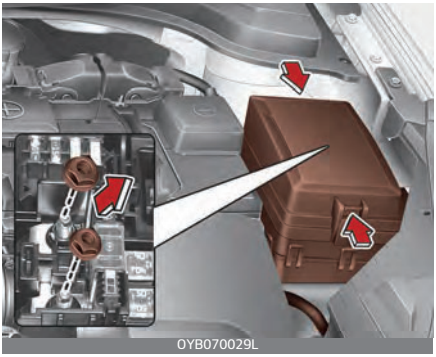
OYB070029L

If the multi fuse is blown, it must be removed as follows:

1. Disconnect the negative battery cable.
2. Remove the nuts shown in the picture above.
3. Replace the fuse with a new one of the same rating.
4. Reinstall in the reverse order of removal.

✻ NOTICE

If the multi fuse is blown, consult a professional workshop. Kia recommends to consult an authorized Kia dealer/service partner.

Fuse/relay panel description

Driver's side fuse panel


OYB070030L

Engine compartment fuse panel

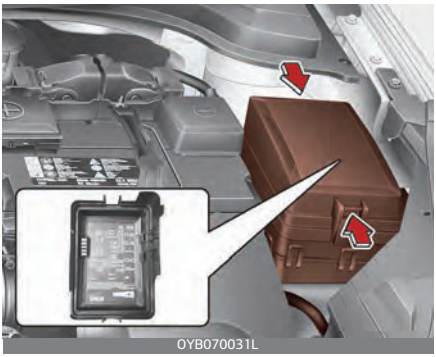
OYB070031L

Engine compartment fuse panel (Smartstream G1.0 T-GDi PTC Heater only)

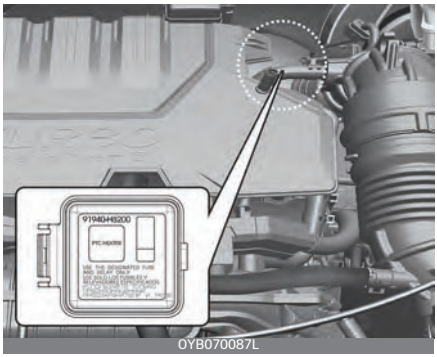
OYB070087L

Inside the fuse/relay panel covers, you can find the fuse/relay label describing fuse/relay name and capacity.

✻ NOTICE

Not all fuse panel descriptions in this manual may be applicable to your vehicle. It is accurate at the time of printing. When you inspect the fuse panel in your vehicle, refer to the fuse panel label.

Driver's side fuse panel

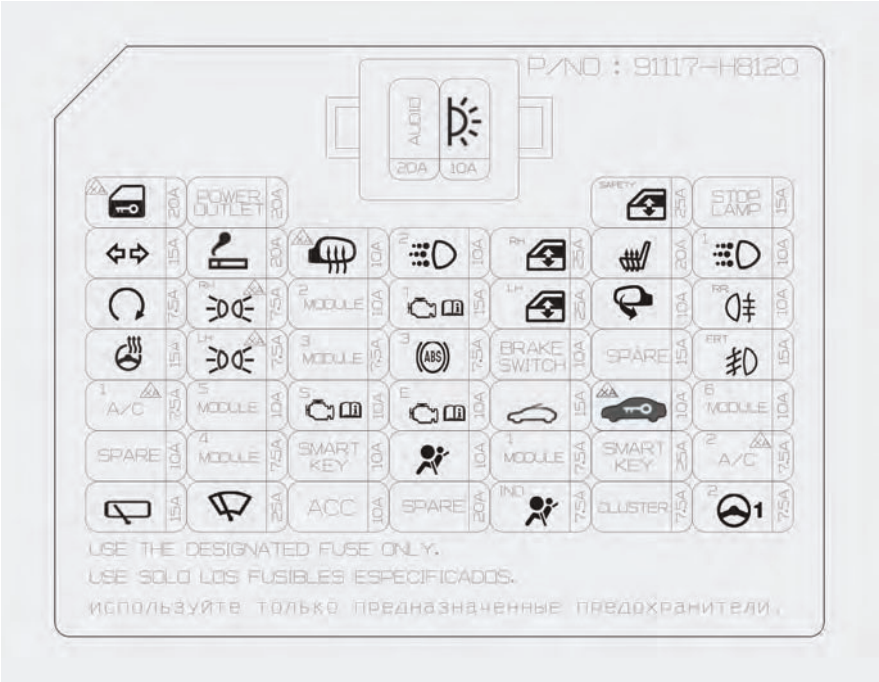

OYB070144L

Instrument panel (Driver's side fuse panel)

Symbol	Fuse rating	Circuit Protected
	20A	Tail Gate Unlock Relay, Dead Lock Relay, Door Lock/Unlock Relay
POWER OUTLET	20A	Power Outlet
	25A	Driver Safety Power Window Module
STOP LAMP	15A	Stop Signal Electronic Module
	15A	BCM (Body Control Module), SLM Unit
	20A	Cigarette Lighter
	10A	Driver Power Outside Mirror, Passenger Power Outside Mirror, Air Conditioner Control Module, ECM (Engine Control Module)/ PCM (Power train Control Module)
	10A	Body Control Module (Daytime Running Light 1/2 Power)
	25A	Power Window Main Switch, Passenger Power Window Switch (LHD)
	20A	Front Seat Warmer Control Module
	10A	DRL (Daytime Running Light) Relay
	7.5A	ECM (Engine Control Module), Engine Room Junction Block (Start Relay), Ignition Lock & Clutch Switch, Transmission Range Switch, Burglar Alarm Relay, Smart Key Control Module
	7.5A	Head Lamp Right Handle Side, License Lamp Right Handle Side, Rear Combination Lamp (IN/OUT) Right Handle Side, ILL (+)
2 MODULE	10A	BCM (Body Control Module), Crash Pad Switch, Front Console Switch, Front Radar, Front View Camera, Blind-Spot Collision Warning Unit Left Handle Side/Right Handle Side
	15A	Engine Room Junction Block (Back-Up Lamp Switch), Transmission Range Switch, Sport Mode Switch, TCM (Transmission Control Module), Clutch Sensor, Speed Sensor, Stop Lamp Switch, Electronic Clutch Module

Symbol	Fuse rating	Circuit Protected
LH	25A	Power Window Main Switch, Passenger Power Window Switch (RHD)
	10A	Power Outside Mirror Switch
RR	10A	Rear Fog Lamp Relay
	15A	Clock Spring
LH	7.5A	Head Lamp Left Handle Side, License Lamp Left Handle Side, Rear Combination Lamp (IN/OUT) Left Handle Side
3 MODULE	7.5A	Front Seat Warmer Control Module, Audio, Audio/Video & Navigation Head Unit, Head Lamp Leveling Device Actuator Left Handle Side/Right Handle Side, Head Lamp Left Handle Side/Right Handle Side, Air Conditioner Control Module, Electro Chromic Mirror, Crash Pad Switch, DC-DC Converter, Clock Spring, Automatic Transmission Shift Lever Indicator
3 ABS	7.5A	Data Link Connector, ABS/ESC (Electronic Stability Control) Control Module
BRAKE SWITCH	10A	Smart Key Control Module, Stop Lamp Switch
SPARE	15A	Spare
FRT	15A	Front Fog Lamp Relay
1 A/C	7.5A	Engine Room Junction Block (Air Conditioner Blower Relay), Gasoline Junction Block (PTC Heater Relay), Air Conditioner Control Module
5 MODULE	10A	Engine Room Junction Block (Head Lamp LO Relay, Head Lamp HI Relay), Front Seat Warmer Control Module, BCM (Body Control Module)
S	10A	CVVD (Continuously Variable Valve Duration) Actuator
E	10A	ECM (Engine Control Module)/PCM (Power train Control Module)
	15A	Sunroof Motor
	10A	Immobilizer Module
6 MODULE	10A	Key Interlock, Center Fascia Switch, Data Link Connector
SPARE	10A	Spare
4 MODULE	7.5A	SLM Unit, BCM (Body Control Module), Smart Key Control Module

Symbol	Fuse rating	Circuit Protected
SMART KEY	10A	Smart Key Control Module, Immobilizer Module, BSA Control Module
	10A	SRS (Supplemental Restraint System) Control Module
1 MODULE	7.5A	BCM (Body Control Module), SLM Unit
SMART KEY	25A	Smart Key Control Module
2 A/C	7.5A	Air Conditioner Control Module
	15A	Multifunction Switch, Rear Wiper Motor, Rear Wiper Relay
	25A	Multifunction Switch, Wiper Motor, Engine Room Junction Block (Wiper LO Relay)
ACC	10A	Power Outlet Relay, BCM (Body Control Module), SLM Unit, Audio, Audio/Video & Navigation Head Unit, DC-DC Converter, USB Charging Connector, Power Outside Mirror Switch, Smart Key Control Module
SPARE	20A	Spare
IND 	7.5A	Instrument Cluster
CLUSTER	7.5A	Instrument Cluster
2  1	7.5A	MDPS (Motor Driven Power Steering) Unit
AUDIO	20A	DC-DC Converter, Audio, Audio / Video & Navigation Head Unit
	10A	Room Lamp Relay, Air Conditioner Control Module, Auto Light & Photo Sensor, BCM (Body Control Module), Instrument Cluster, Rain Sensor, SLM Unit, Glove Box Lamp, Tailgate Room Lamp, Room Lamp, Overhead Console Lamp, Front Vanity Lamp Left Handle Side/ Right Handle Side

Engine compartment fuse panel

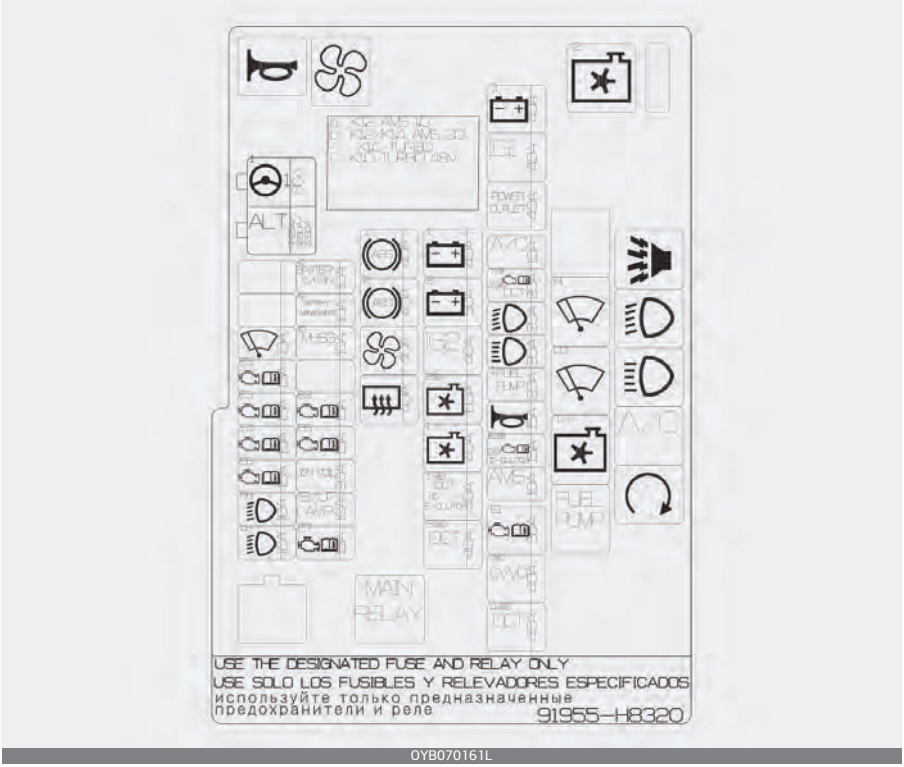

0YB070161L

Engine room compartment fuse panel (Smartstream G1.0 T-GDi/Smartstream G1.0 T-GDi 48V HEV)

Symbol	Fuse rating	Circuit Protected
1	80A	MDPS (Motor Driven Power Steering) Unit
ALT	150A / 180A	Fuse - ABS 1, ABS 2, BLOWER, REAR DEFOG
	10A	Wiper LO Relay, Front Wiper Motor, Multifunction Switch
E5	15A	ECM (Engine Control Module)
E3	15A	Purge Control Solenoid Valve, Oil Control Valve #1/#2, Oxygen Sensor (Up/Down)
E4	10A	A/Con Relay, Sub junction block (Cooling Fan 2 Relay), RCV Control Solenoid Valve, Variable Oil Pump Valve
E6	15A	Fuel Pump Relay
RH	10A	Head Lamp Right Handle Side
LH	10A	Head Lamp Left Handle Side
BATTERY C/FAN	10A	[With Mild HEV] BSA Cooling Fan
BATTERY MANAGEMENT	10A	[With Mild HEV] BSA Control Module
MHSG	10A	[With Mild HEV] Hybrid Starter & Generator Motor
E9	15A	ECM (Engine Control Module)
E8	15A	ECM (Engine Control Module)
IGN COIL	20A	Ignition Coil #1, #2, #3
B/UP LAMP	10A	Back-Up Lamp Switch
E7	15A	ECM (Engine Control Module)
1 ABS	40A	ABS/ESC (Electronic Stability Control) Control Module
2 ABS	40A	ABS/ESC (Electronic Stability Control) Control Module
	40A	A/C Blower Relay
	40A	Instrument Panel Junction Block (Rear Defogger Relay)
1	40A	Instrument Panel Junction Block (Fuse - STOP LAMP, DRL 2, DRL 1, REAR FOG, FRONT FOG, MODULE 6, AUDIO, ROOM LAMP)

Symbol	Fuse rating	Circuit Protected
	50A	Instrument Panel Junction Block (Fuse - SAFETY WINDOW, P/WINDOW RH, S/HEATER, P/WINDOW LH, FOLD MIRROR, BRAKE SWITCH, SUNROOF, IMMOBILIZER, SMART KEY, Power Window Relay)
IG2	40A	Ignition Switch, PDM Relay Box (IG 2 Relay), Start Relay
	60A	Sub junction block (Cooling Fan 2 Relay)
DCT1	40A	TCM (Transmission Control Module)
E-CLUTCH1	40A	[With Clutch By Wire] Electronic Clutch Module
DCT2	40A	TCM (Transmission Control Module)
	40A	Instrument Panel Junction Block (Fuse - DOOR LOCK, TURN LAMP, Tail Lamp Relay) [With Mild HEV] Main Relay, Horn Relay
IG1	40A	Ignition Switch, PDM Relay Box (IG1 Relay, ACC Relay)
POWER OUTLET	40A	Instrument Panel Junction Block (Power Outlet Relay)
A/C	10A	Air Conditioner Relay
DCT3	20A	TCM (Transmission Control Module)
	20A	Head Lamp LO Relay
	20A	Head Lamp HI Relay
FUEL PUMP	20A	Fuel Pump Relay
	15A	Burglar Alarm Horn Relay, Horn Relay
E-CLUTCH2	15A	[With Clutch By Wire] Electronic Clutch Module
AMS	10A	[With ISG] Battery Sensor
	30A	ENG E9, ENG E8, Main Relay
CVVD	40A	CVVD (Continuously Variable Valve Duration) Actuator
DCT4	40A	[Dual Clutch Transmission] Smart Gear Actuator

Relay (Smartstream G1.0 T-GDi/Smartstream G1.0 T-GDi 48V HEV)

Symbol	Relay Name	Type
	Burglar Alarm Horn Relay	MICRO
	Wiper HI Relay	MICRO
	Head Lamp LO Relay	MICRO
	Wiper LO Relay	MICRO
	Head Lamp HI Relay	MICRO
A/C	Air Conditioner Relay	MICRO
FUEL PUMP	Fuel Pump Relay	MICRO
	Start Relay	MICRO
	Cooling Fan 2 Relay	MICRO
MAIN	Main Relay	MINI
	Horn Relay	MICRO
	Air Conditioner Blower Relay	MICRO

Engine room compartment fuse panel (Smartstream G1.2)

Symbol	Fuse rating	Circuit Protected
	80A	MDPS (Motor Driven Power Steering) Unit
ALT	125A / 150A	Fuse - ABS 1, ABS 2, BLOWER, REAR DEFOG
	10A	Wiper LO Relay, Front Wiper Motor, Multifunction Switch
	15A	ECM (Engine Control Module)
	15A	Purge Control Solenoid Valve, Oil Control Valve #1/#2, Oxygen Sensor (Up/Down)
	10A	Cooling Fan 1 Relay, Air Conditioner Relay, Front Wheel Sensor Right Handle Side, Sub junction block (Cooling Fan 2 Relay)
	15A	Fuel Pump Relay, Injector #1, #2, #3, #4
	10A	Head Lamp Right Handle Side
	10A	Head Lamp Left Handle Side
	15A	ECM (Engine Control Module)
	15A	ECM (Engine Control Module)
IGN COIL	20A	Ignition Coil #1, #2, #3, #4
B/UP LAMP	10A	[Manual Transmission] Back-Up Lamp Switch
	15A	ECM (Engine Control Module)
	40A	ABS(Anti-lock Brake System)/ ESC (Electronic Stability Control) Control Module
	40A	ABS(Anti-lock Brake System)/ ESC (Electronic Stability Control) Control Module
	40A	Air Conditioner Blower Relay
	40A	Instrument Panel Junction Block (Rear Defogger Relay)
	40A	Instrument Panel Junction Block (Fuse - STOP LAMP, DRL 2, DRL 1, REAR FOG, FRONT FOG, MODULE 6, AUDIO, ROOM LAMP)

Symbol	Fuse rating	Circuit Protected
	50A	Instrument Panel Junction Block (Fuse – SAFETY WINDOW, P/WINDOW RH, S/HEATER, P/WINDOW LH, FOLD MIRROR, BRAKE SWITCH, SUNROOF, IMMOBILIZER, SMART KEY, Power Window Relay)
IG2	40A	Ignition Switch, PDM (Power Distribution Modules) Relay Box (IG2 Relay), Start Relay
	40A	Cooling Fan 1 Relay, Sub junction block (Cooling Fan 2 Relay)
	40A	Instrument Panel Junction Block (Fuse – DOOR LOCK, TURN LAMP, Tail Lamp Relay)
IG1	40A	Ignition Switch, PDM (Power Distribution Modules) Relay Box (IG1 Relay, ACC Relay)
POWER OUTLET	40A	Instrument Panel Junction Block (Power Outlet Relay)
A/C	10A	Air Conditioner Relay
	20A	Head Lamp LO Relay
	20A	Head Lamp HI Relay
FUEL PUMP	20A	Fuel Pump Relay
	15A	Burglar Alarm Horn Relay, Horn Relay
AMS	10A	Battery Sensor
	30A	ENG E9, ENG E8, Main Relay

Relay (Smartstream G1.2)

Symbol	Relay Name	Type
	Burglar Alarm Horn Relay	MICRO
	Wiper HI Relay	MICRO
	Head Lamp LO Relay	MICRO
	Wiper LO Relay	MICRO
	Head Lamp HI Relay	MICRO
	Cooling Fan 1 Relay	MICRO
A/C	Air Conditioner Relay	MICRO
FUEL PUMP	Fuel Pump Relay	MICRO
	Start Relay	MICRO
	Cooling Fan 2 Relay	MICRO
MAIN	Main Relay	MINI
	Horn Relay	MICRO
	Air Conditioner Blower Relay	MICRO

Engine room compartment fuse panel ((Gasoline engine) 1.4 MPI)

Symbol	Fuse rating	Circuit Protected
	80A	MDPS (Motor Driven Power Steering) Unit
ALT	150A	Fuse - ABS 1, ABS 2, BLOWER, REAR DEFOG
	10A	Wiper LO Relay, Front Wiper Motor, Multifunction Switch
	15A	Purge Control Solenoid Valve, Oil Control Valve #1/#2, Engine Coolant Stop Valve, A/Con Relay, Variable Intake Solenoid Valve, ECM (Engine Control Module)/PCM (Power train Control Module)
	10A	Cooling Fan 1 Relay, Oxygen Sensor (Up/Down), Engine Coolant Stop Valve, Front Wheel Sensor Right Handle Side, Sub junction block (Cooling Fan 2 Relay), Variable Intake Solenoid Valve
	15A	Fuel Pump Relay, Injector #1, #2, #3, #4, ECM (Engine Control Module), PCM (Power train Control Module), Oil Control Valve #1/#2, Purge Control Solenoid Valve
	10A	Head Lamp Right Handle Side
	10A	Head Lamp Left Handle Side
IGN COIL	20A	Ignition Coil #1, #2, #3, #4, Condenser
B/UP LAMP	10A	[Manual Transmission] Back-Up Lamp Switch
	40A	ABS (Anti-lock Brake System)/ ESC (Electronic Stability Control) Control Module
	40A	ABS (Anti-lock Brake System)/ ESC (Electronic Stability Control) Control Module
	40A	Air Conditioner Blower Relay
	40A	Instrument Panel Junction Block (Rear Defogger Relay)
	40A	Instrument Panel Junction Block (Fuse - STOP LAMP, DRL 2, DRL 1, REAR FOG, FRONT FOG, MODULE 6, AUDIO, ROOM LAMP)
	50A	Instrument Panel Junction Block (Fuse - SAFETY WDW, P/WDW RH, S/HEATER, P/WDW LH, FOLD MIRROR, BRAKE SWITCH, SUNROOF, IMMOBILIZER, SMART KEY, Power Window Relay)

Symbol	Fuse rating	Circuit Protected
IG2	40A	Ignition Switch, PDM (Power Distribution Modules) Relay Box (IG 2 Relay), Start Relay
1	40A	Cooling Fan 1 Relay, Sub junction block (Cooling Fan 2 Relay)
3	40A	Instrument Panel Junction Block (Fuse - DOOR LOCK, TURN LAMP, Tail Lamp Relay)
IG1	40A	Ignition Switch, PDM Relay Box (IG 1 Relay, ACC Relay)
POWER OUTLET	40A	Instrument Panel Junction Block (Power Outlet Relay)
A/C	10A	Air Conditioner Relay
T1	20A	PCM (Power train Control Module)
	20A	Head Lamp LO Relay
	20A	Head Lamp HI Relay
FUEL PUMP	20A	Fuel Pump Relay
	15A	Burglar Alarm Horn Relay, Horn Relay
E2	15A	ECM (Engine Control Module)/PCM (Power train Control Module)
AMS	10A	Battery Sensor
E1	30A	Main Relay

Relay ((Gasoline engine) 1.4 MPI)

Symbol	Relay Name	Type
	Burglar Alarm Horn Relay	MICRO
	Wiper HI Relay	MICRO
	Head Lamp LO Relay	MICRO
	Wiper LO Relay	MICRO
	Head Lamp HI Relay	MICRO
	Cooling Fan 1 Relay	MICRO
A/C	Air Conditioner Relay	MICRO
FUEL PUMP	Fuel Pump Relay	MICRO
	Start Relay	MICRO
	Cooling Fan 2 Relay	MICRO
MAIN	Main Relay	MINI
	Horn Relay	MICRO
	Air Conditioner Blower Relay	MICRO

Engine room compartment fuse panel (Smartstream G1.0 T-GDi/Smartstream G1.0 T-GDi 48V HEV PTC Heater only)

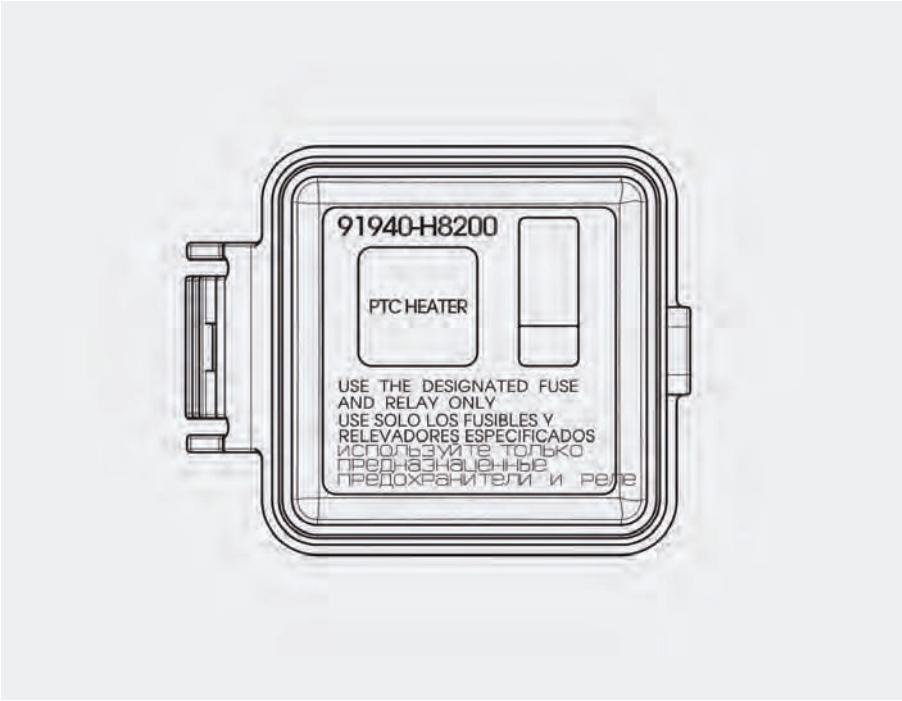

Light bulbs

Bulb replacement precaution

Please prepare bulbs with appropriate standards in case of emergencies. Refer to "Bulb wattage" on page 8-4.

When changing bulbs and sorts, first turn off the engine at a safe place, firmly apply the side brake and take out the battery's negative (-) terminal.

⚠ WARNING

Working on the lights

Prior to working on the light, firmly apply the parking brake, ensure that the ignition switch is turned to the LOCK position and turn off the lights to avoid sudden movement of the vehicle and burning your fingers or receiving an electric shock.

Use only the bulbs of the specified wattage.

⚠ WARNING

Be sure to replace the burnedout bulb with one of the same wattage rating. Otherwise, it may cause extensive wiring damage and possible fire.

⚠ CAUTION

If you don't have necessary tools, the correct bulbs and the expertise, consult a professional workshop. Kia recommends to consult an authorized Kia dealer/service partner.

In many cases, it is difficult to replace vehicle light bulbs because other parts of the vehicle must be removed before you can get to the bulb.This is especially true if you have to remove the headlight assembly to get to the bulb(s). Removing/ installing the headlight assembly can result in damage to the vehicle.

⚠ CAUTION

- If unauthentic parts or substandard lights are used when changing lights, it may lead to fuse disconnection and malfunction, and other wiring damages.
- Do not install extra lamps or LED to the vehicle. If supplementary lights are installed, it may lead to lamp malfunction and flickering of the lights. In addition, the fuse box and other writing may be damaged.

- **Lamp part malfunction due to net-work failure**

The headlamp, taillight, and fog light may lit up when the head lamp switch is turned ON, and not light up when the taillight or for light switch is turned ON. This may be cause by network failure or vehicle electrical control system malfunction. If there is a problem, have the system serviced by a professional workshop. Kia recommends to visit an authorized Kia dealer/service partner.

- **Lamp part malfunction due to electrical control system stabilization**

A normally functioning lamp may flicker momentarily. This momentary occurrence is due to stabilization function of the vehicle's electrical control system. If the lamp soon returns to normal, the vehicle does not require service.

However, if the lamp goes out after the momentary flickering, or the flickering continues, have the system serviced by a professional workshop. Kia recommends to visit an authorized Kia dealer/service partner.

✻ NOTICE

- If the light bulb or lamp connector is removed from an operating lamp activated by electricity, the fuse box's electronic device may scan it as a malfunction. Therefore, a lamp malfunction history may be recorded in Diagnostic Trouble Code (DTC) in the fuse box.
- It is normal for an operating lamp may blink temporarily. Since this occurrence is due stabilization function of the vehicle's electronic control device, if the lamp lights up normally after temporary blinking, there is no problem in the vehicle.
  However, if the lamp continues to blink several times or turn off completely, there may be an error in the vehicle's electronic control device. In this case, have the vehicle checked by a professional workshop immediately. Kia recommends to visit an authorized Kia dealer/service partner.

✻ NOTICE

After an accident or after the headlight assembly is reinstalled, have the headlight aiming adjusted by a professional workshop. Kia recommends to visit an authorized Kia dealer/service partner.

✻ NOTICE

You can find moisture inside the lens of lamps after a car wash or driving in the rain. It is a natural event caused by the temperature difference between the inside and the outside of the lamp and does not mean a problem with its functions. The moisture inside the lamp would disappear if you drive the vehicle with the headlamp turned on, however, the level at which the moisture is removed may differ depending on the size / location / condition of the lamp. If the moisture continues to stay inside the lamp, have the vehicle checked by a professional workshop. Kia recommends to visit an authorized Kia dealer/service partner.

Light bulb position (Front)

Head lamp - Type A

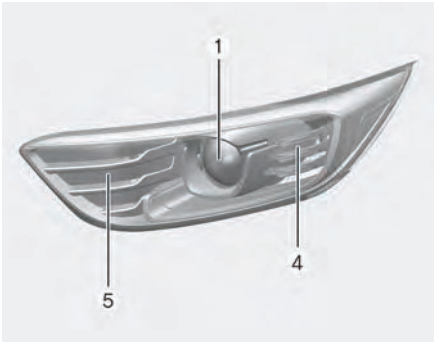

OST070179L

Head lamp - Type B

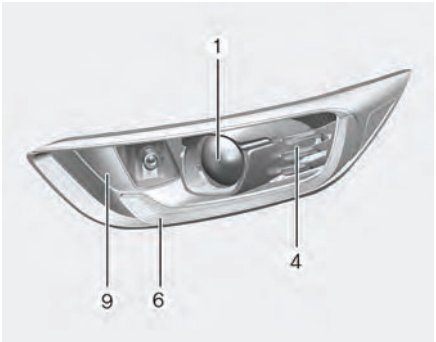

OST070180L

Head lamp Type C

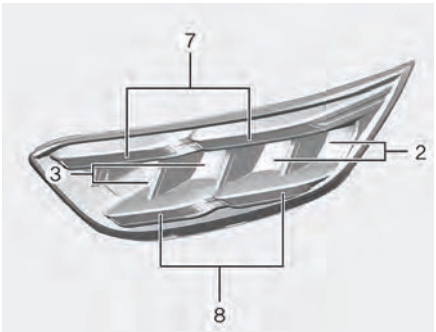

OST070181L

Fog lamp - Type A



OYB070040L

Fog lamp - Type B



OST070207L

1. Headlamp (Low/High) (Bulb type)
2. Headlamp (Low) (LED type)
3. Headlamp (High) (LED type)
4. Front turn signal lamp (Bulb type)
5. Position lamp/Daytime running lamp (Bulb type)
6. Position lamp/Daytime running lamp (LED type)
7. Daytime running lamp/Front turn signal lamp (LED type)
8. Daytime running lamp/Position lamp (LED type)
9. Static bending light (Bulb type)
10. Fog lamp (Bulb type)
11. Fog lamp (LED type)

Light bulb position (Rear)

Rear combination lamp - Type A



OYB077043

Rear combination lamp - Type B

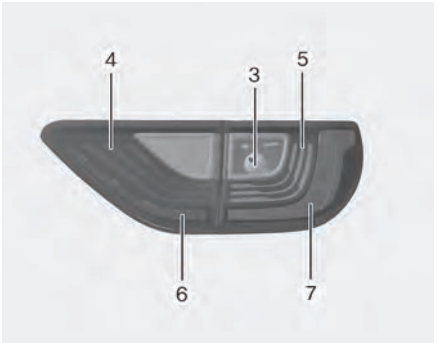

OYB077091

Back up lamp - Type A

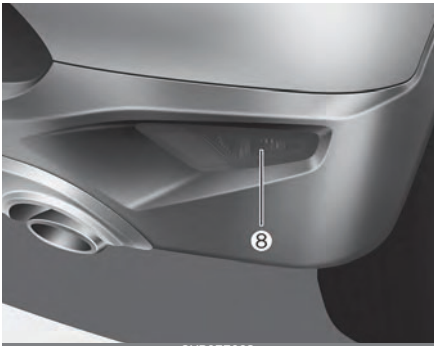

OYB077092

Back up lamp - Type B



Back up lamp

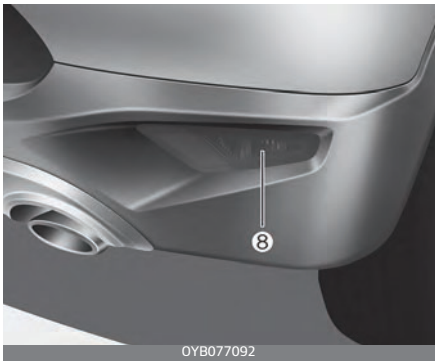

Rear fog lamp - Type A

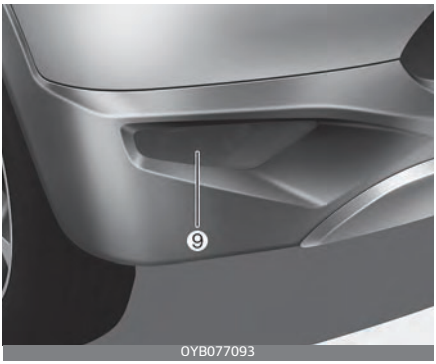

Rear fog lamp

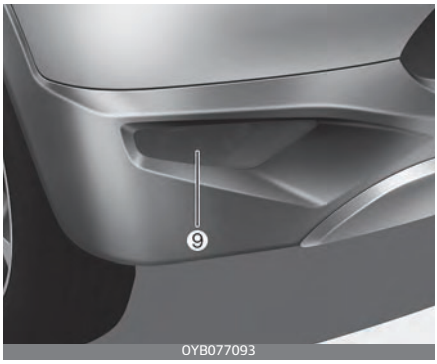

Rear fog lamp - Type B



License plate lamp

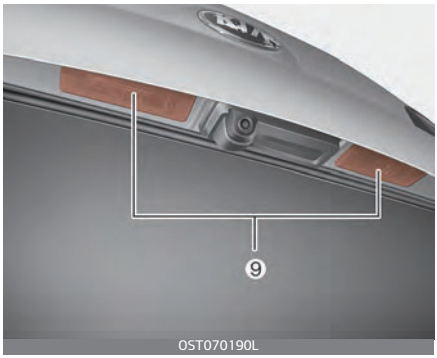

High mounted stop lamp



1. Tail lamp (Bulb type)
2. Stop and tail lamp (Bulb type)
3. Rear turn signal lamp (Bulb type)
4. Tail lamp (LED type)
5. Tail lamp (LED type)
6. Stop and tail lamp (LED type)
7. Stop and tail lamp (LED type)
8. Back up lamp (Bulb type)
9. Rear fog lamp (Bulb type)
10. License plate lamp (Bulb type)
11. High mounted stop lamp (Bulb type)

Light bulb position (Side)

Type A

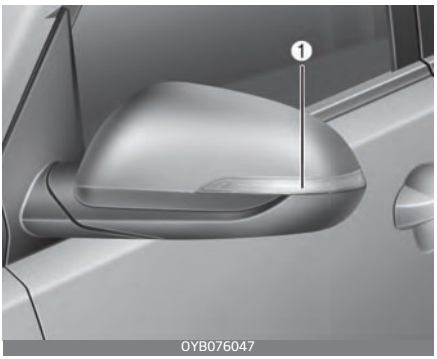

Type B

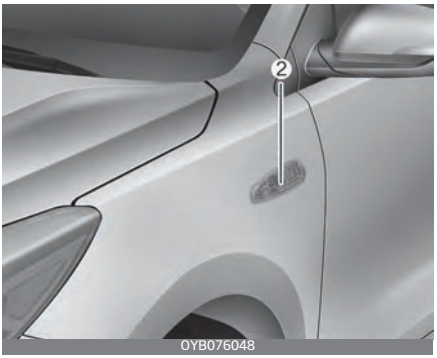

1. Side repeater lamp (LED type)
2. Side repeater lamp (Bulb type)

Side repeater lamp (LED type) bulb Replacement

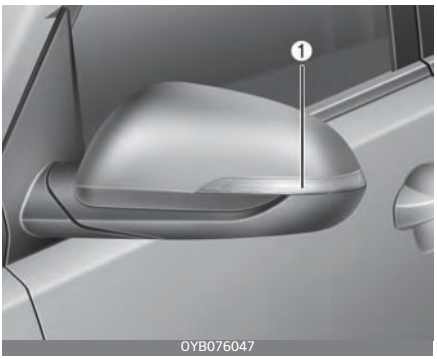

If the side repeater lamp (LED) (1) does not operate, have your vehicle checked by a professional workshop.

Kia recommends to visit an authorized Kia dealer/service partner.

The LED lamps cannot be replaced as a single unit because it is an integrated unit. The LED lamps has to be replaced with the unit.

A skilled technician should check or repair side repeater lamp (LED), for it may damage related parts of the vehicle.

Side repeater lamp (Bulb type) bulb Replacement

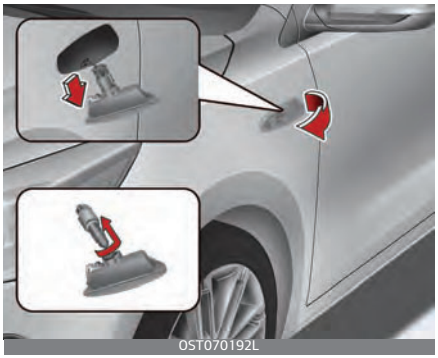
OST070192L

1. Remove the lamp assembly from the vehicle by prying the lens and pulling the assembly out.
2. Disconnect the bulb electrical connector.
3. Separate the socket and the lens parts by turning the socket counterclockwise until the tabs on the socket align with the slots on the lens part.
4. Remove the bulb by pulling it straight out.
5. Insert a new bulb in the socket.
6. Reassemble the socket and the lens part.
7. Connect the bulb electrical connector.
8. Reinstall the lamp assembly to the body of the vehicle.

Headlamp (Low/High beam) bulb replacement (Headlamp Type A)

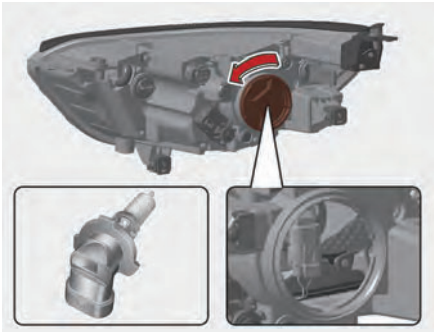
OST070193L

1. Open the hood.
2. Remove the headlamp bulb cover by turning it counterclockwise.
3. Disconnect the headlamp bulb socket-connector.
4. Remove the bulb-socket from the headlamp assembly by turning the bulb-socket counterclockwise until the tabs on the bulb-socket align with the slots on the headlamp assembly.
5. Install a new bulb-socket assembly in the headlamp assembly by aligning the tabs on the bulb-socket with the slots in the headlamp assembly. Push the bulb-socket into the headlamp assembly and turn the bulb-socket clockwise.
6. Install the headlamp bulb cover by turning it clockwise.

Headlamp bulb


OJA070102

⚠ WARNING

Halogen bulbs

- Halogen bulbs contain pressurized gas that will produce flying pieces of glass if broken.
- Always handle them carefully, and avoid scratches and abrasions. If the bulbs are lit, avoid contact with liquids. Never touch the glass with bare hands. Residual oil may cause the bulb to overheat and burst when lit.
  A bulb should be operated only when installed in a headlight.
- If a bulb becomes damaged or cracked, replace it immediately and carefully dispose of it.
- Wear eye protection when changing a bulb. Allow the bulb to cool down before handling it.

Front turn signal lamp bulb replacement (Headlamp Type A)

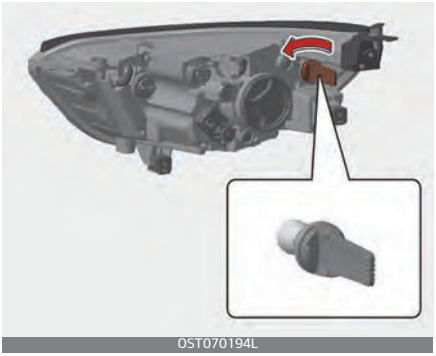
OST070194L

1. Open the hood.
2. Remove the bulb-socket from the headlamp assembly by turning the bulb-socket counterclockwise until the tabs on the bulb-socket align with the slots on the headlamp assembly.
3. Remove the bulb from the bulb-socket by pressing it in and rotating it counterclockwise until the tabs on the bulb align with the slots in the bulb-socket. Pull the bulb out of the bulb-socket.
4. Insert a new bulb by inserting it into the bulb-socket and rotating it until it locks into place.
5. Install the socket in the headlamp assembly by aligning the tabs on the bulb-socket with the slots in the assembly. Push the bulb-socket into the headlamp assembly and turn the socket clockwise.

Position lamp/Daytime running lamp bulb replacement (Headlamp Type A)

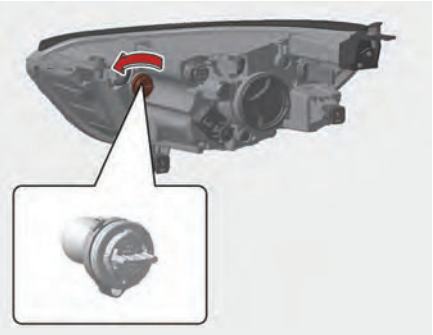
OST070195L

1. Open the hood.
2. Remove the bulb-socket from the headlamp assembly by turning the bulb-socket counterclockwise until the tabs on the bulb-socket align with the slots on the headlamp assembly.
3. Remove the bulb from the bulb-socket by pressing it in and rotating it counterclockwise until the tabs on the bulb align with the slots in the bulb-socket. Pull the bulb out of the bulb-socket.
4. Insert a new bulb by inserting it into the bulb-socket and rotating it until it locks into place.
5. Install the socket in the headlamp assembly by aligning the tabs on the bulb-socket with the slots in the assembly. Push the bulb-socket into the headlamp assembly and turn the socket clockwise.

Headlamp (Low/High beam) bulb replacement (Headlamp Type B)

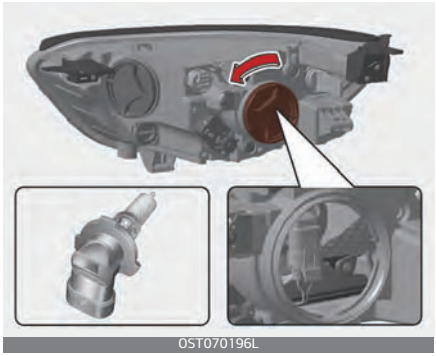
OST070196L

1. Open the hood.
2. Remove the headlamp bulb cover by turning it counterclockwise.
3. Disconnect the headlamp bulb socket-connector.
4. Remove the bulb-socket from the headlamp assembly by turning the bulb-socket counterclockwise until the tabs on the bulb-socket align with the slots on the headlamp assembly.
5. Install a new bulb-socket assembly in the headlamp assembly by aligning the tabs on the bulb-socket with the slots in the headlamp assembly. Push the bulb-socket into the headlamp assembly and turn the bulb-socket clockwise.
6. Install the headlamp bulb cover by turning it clockwise.

Headlamp bulb


OJA070102

⚠ WARNING

Halogen bulbs

- Halogen bulbs contain pressurized gas that will produce flying pieces of glass if broken.
- Always handle them carefully, and avoid scratches and abrasions. If the bulbs are lit, avoid contact with liquids. Never touch the glass with bare hands. Residual oil may cause the bulb to overheat and burst when lit.
  A bulb should be operated only when installed in a headlight.
- If a bulb becomes damaged or cracked, replace it immediately and carefully dispose of it.
- Wear eye protection when changing a bulb. Allow the bulb to cool down before handling it.

Front turn signal lamp bulb replacement (Headlamp Type B)

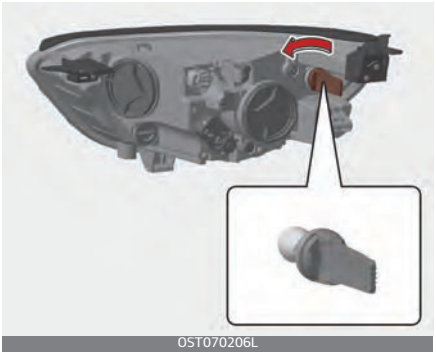
OST070206L

1. Open the hood.
2. Remove the bulb-socket from the headlamp assembly by turning the bulb-socket counterclockwise until the tabs on the bulb-socket align with the slots on the headlamp assembly.
3. Remove the bulb from the bulb-socket by pressing it in and rotating it counterclockwise until the tabs on the bulb align with the slots in the bulb-socket. Pull the bulb out of the bulb-socket.
4. Insert a new bulb by inserting it into the bulb-socket and rotating it until it locks into place.
5. Install the socket in the headlamp assembly by aligning the tabs on the bulb-socket with the slots in the assembly. Push the bulb-socket into the headlamp assembly and turn the socket clockwise.

Static bending light (Bulb type) replacement (Headlamp Type B)

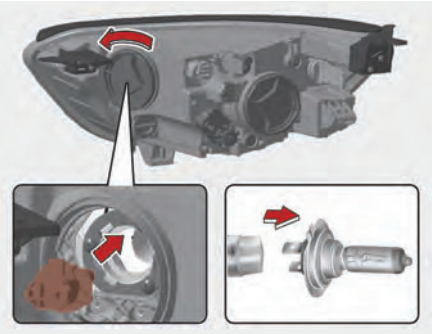

OYB070097

1. Open the hood.
2. Remove the headlamp bulb cover by turning it counterclockwise.
3. Remove the bulb-socket from the headlamp assembly by turning the bulb-socket counterclockwise until the tabs on the bulb-socket align with the slots on the headlamp assembly.
4. Remove the bulb from bulb-socket by pulling it out.
5. Insert a new bulb by inserting it into the bulb-socket.
6. Install the bulb-socket in the headlamp assembly by aligning the tabs on the bulb-socket with the slots in the headlamp assembly. Push the bulb-socket into the headlamp assembly and turn the bulb-socket clockwise.
7. Install the headlamp bulb cover by turning it clockwise.

Position lamp/Daytime running lamp (LED type) replacement (Headlamp Type B)



OYB077098

If the position lamp/daytime running lamp (LED) (1) does not operate, have your vehicle checked by a professional workshop.

Kia recommends to visit an authorized Kia dealer/service partner.

The LED lamps cannot be replaced as a single unit because it is an integrated unit. The LED lamps has to be replaced with the unit.

A skilled technician should check or repair the position lamp/daytime running lamp (LED), for it may damage related parts of the vehicle.

Headlamp (Low beam) (LED Type) bulb replacement (Headlamp Type C)

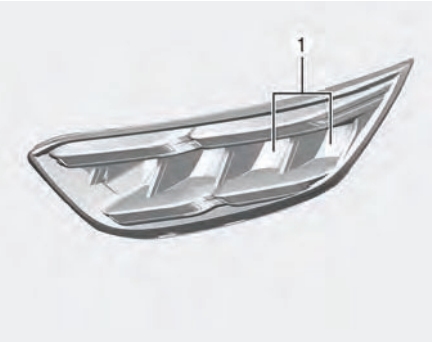

OST070184L

If the headlamp (Low beam) (LED) (1) does not operate, have your vehicle checked by a professional workshop.

Kia recommends to visit an authorized Kia dealer/service partner.

The LED lamps cannot be replaced as a single unit because it is an integrated unit. The LED lamps has to be replaced with the unit.

A skilled technician should check or repair the headlamp (Low beam) (LED), for it may damage related parts of the vehicle.

Headlamp (High beam) (LED Type) bulb replacement (Headlamp Type C)

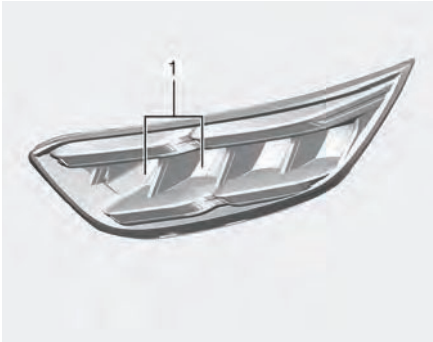

OST070183L

If the headlamp (High beam) (LED) (1) does not operate, have your vehicle checked by a professional workshop.

Kia recommends to visit an authorized Kia dealer/service partner.

The LED lamps cannot be replaced as a single unit because it is an integrated unit. The LED lamps has to be replaced with the unit.

A skilled technician should check or repair the headlamp (High beam) (LED), for it may damage related parts of the vehicle.

Daytime running lamp/Front turn signal lamp (LED Type) replacement (Headlamp Type C)



OST070185L

If the daytime running lamp/front turn signal lamp (LED) (1) does not operate, have your vehicle checked by a professional workshop.

Kia recommends to visit an authorized Kia dealer/service partner.

The LED lamps cannot be replaced as a single unit because it is an integrated unit. The LED lamps has to be replaced with the unit.

A skilled technician should check or repair the daytime running lamp/front turn signal lamp (LED), for it may damage related parts of the vehicle.

Daytime running lamp/Position lamp (LED Type) replacement (Headlamp Type C)



OST070186L

If the daytime running lamp/position lamp (LED) (1) does not operate, have your vehicle checked by a professional workshop.

Kia recommends to visit an authorized Kia dealer/service partner.

The LED lamps cannot be replaced as a single unit because it is an integrated unit. The LED lamps has to be replaced with the unit.

A skilled technician should check or repair the daytime running lamp/position lamp (LED), for it may damage related parts of the vehicle.

Front fog lamp (bulb type) bulb replacement (Fog lamp type A)



OYB070057L

1. Disconnect the negative (-) battery terminal.
2. Disconnect the side after loosening the front bumper sides screws and clips.
3. Disconnect the front fog lamp connector.
4. Remove the socket from the assembly by turning the socket counterclockwise until the tabs on the socket align with the slots on the assembly.
5. Remove the bulb from the socket by pressing it in and rotating it counter-clockwise until the tabs on the bulb align with the slots in the socket. Pull the bulb out of the socket.
6. Insert a new bulb by inserting it into the socket and rotating it until it locks into place.
7. Install the socket in the assembly by aligning the tabs on the socket with the slots in the assembly. Push the socket into the assembly and turn the socket clockwise.
8. Connect the front fog lamp connector.
9. Install the front bumper side assembly to the body of the vehicle.

Front fog lamp (LED type) bulb replacement (Fog lamp type B)

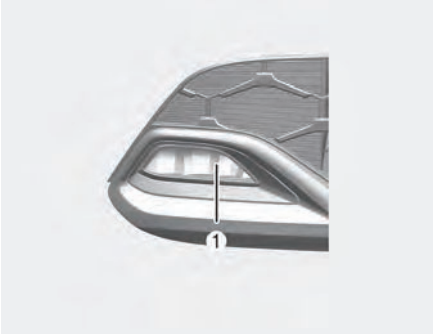

OST070208L

If the front fog lamp (LED) (1), does not operate, have your vehicle checked by a professional workshop. Kia recommends to visit an authorized Kia dealer/service partner.The LED lamps cannot be replaced as a single unit because it is an integrated unit. The LED lamps has to be replaced with the unit.A skilled technician should check or repair the front fog lamp (LED), for it may damage related parts of the vehicle.

Rear turn signal lamp bulb replacement

1. Open the tail gate.
2. Loosen the light assembly retaining screws with a cross-tip screwdriver.

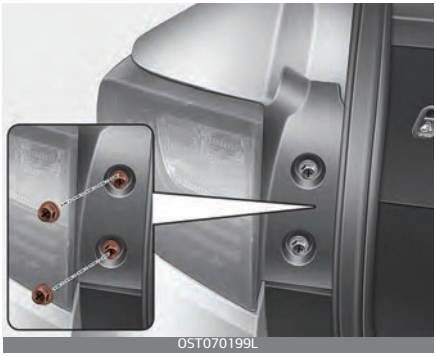
OST070199L

3. Remove the rear combination lamp assembly from the body of the vehicle.
4. Disconnect the rear combination lamp connector.

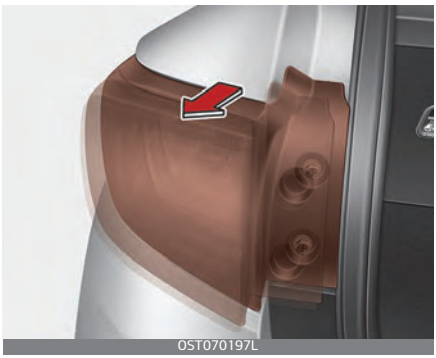
OST070197L

5. Remove the socket from the assembly by turning the socket counterclockwise until the tabs on the socket align with the slots on the assembly.
6. Remove the bulb from the socket by pressing it in and rotating it counterclockwise until the tabs on the bulb align with the slots in the socket. Pull the bulb out of the socket.
7. Insert a new bulb by inserting it into the socket and rotating it until it locks into place.

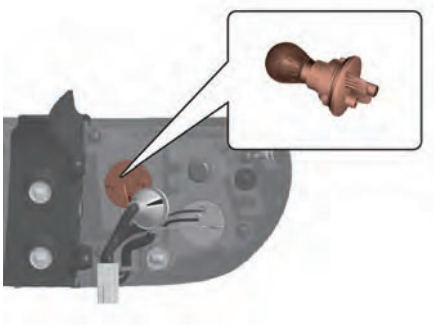
OST070198L

8. Install the socket in the assembly by aligning the tabs on the socket with the slots in the assembly. Push the socket into the assembly and turn the socket clockwise.
9. Install the rear combination lamp assembly to the body of the vehicle.

Stop and tail lamp bulb replacement

1. Open the tail gate.
2. Loosen the light assembly retaining screws with a cross-tip screwdriver.

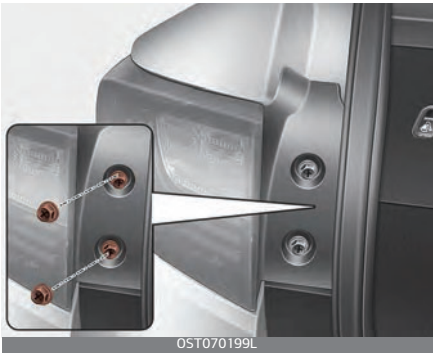
OST070199L

3. Remove the rear combination lamp assembly from the body of the vehicle.
4. Disconnect the rear combination lamp connector.

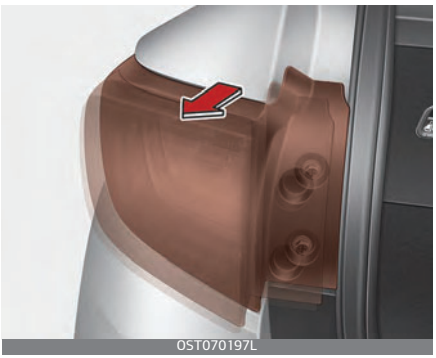
OST070197L

5. Remove the socket from the assembly by turning the socket counterclockwise until the tabs on the socket align with the slots on the assembly.
6. Remove the bulb from the socket by pressing it in and rotating it counterclockwise until the tabs on the bulb align with the slots in the socket. Pull the bulb out of the socket.
7. Insert a new bulb by inserting it into the socket and rotating it until it locks into place.

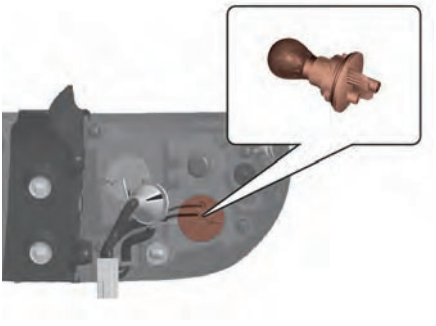
OST070200L

8. Install the socket in the assembly by aligning the tabs on the socket with the slots in the assembly. Push the socket into the assembly and turn the socket clockwise.
9. Install the rear combination lamp assembly to the body of the vehicle.

Tail lamp (inside) bulb replacement

1. Open the tailgate.
2. Remove the service cover.

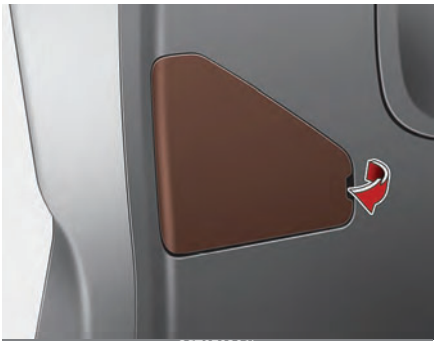
OST070201L

3. Remove the socket from the assembly by turning the socket counterclockwise until the tabs on the socket align with the slots on the assembly.
4. Remove the bulb from bulb-socket by pulling it out.
5. Insert a new bulb by inserting it into the bulb-socket.

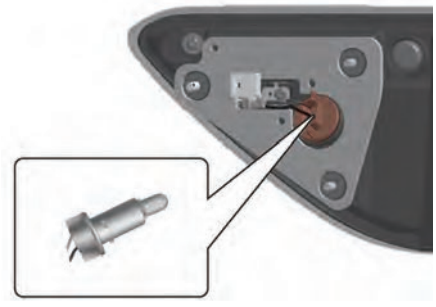

OST070202L

6. Install the socket in the assembly by aligning the tabs on the socket with the slots in the assembly. Push the socket into the assembly and turn the socket clockwise.
7. Install the service cover by putting it into the service hole.

Stop and tail lamp (LED type) bulb replacement

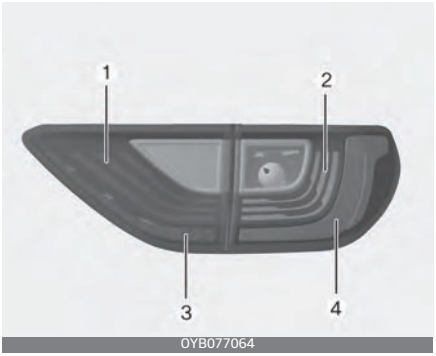

OYB077064

If the stop and tail lamp (LED) (1,2,3,4) does not operate, have your vehicle checked by a professional workshop.

Kia recommends to visit an authorized Kia dealer/service partner.

The LED lamps cannot be replaced as a single unit because it is an integrated unit. The LED lamps has to be replaced with the unit.

A skilled technician should check or repair the stop and tail lamp (LED), for it may damage related parts of the vehicle.

Back up lamp (Bulb type) bulb replacement

Back up lamp type A

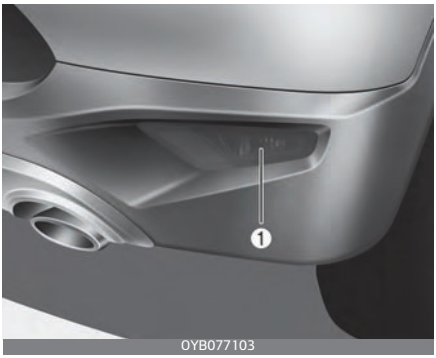

Back up lamp type B



1. Disconnect the negative (–) battery terminal.
2. Remove the rear wheel guard after loosening the mounting screws and clips.
3. Disconnect the back up lamp connector.
4. Remove the socket from the assembly by turning the socket counterclockwise until the tabs on the socket align with the slots on the assembly.
5. Remove the bulb from the socket by pressing it in and rotating it counterclockwise until the tabs on the bulb align with the slots in the socket. Pull the bulb out of the socket.
6. Insert a new bulb by inserting it into the socket and rotating it until it locks into place.
7. Install the socket into the assembly by aligning the tabs on the socket with the slots in the assembly. Push the socket into the assembly and turn the socket clockwise.
8. Reinstall the lamp assembly to the body of the vehicle.

Rear fog lamp (Bulb type) bulb replacement

Rear fog lamp type A

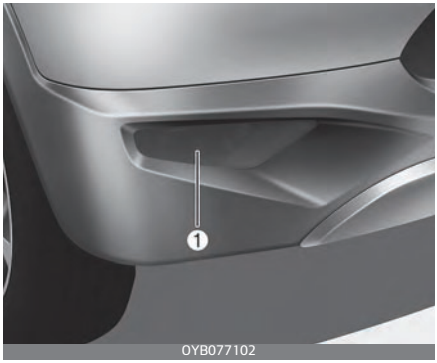

Rear fog lamp type B



1. Disconnect the negative (-) battery terminal.
2. Remove the rear wheel guard after loosening the mounting screws and clips.
3. Disconnect the rear fog lamp connector.
4. Remove the socket from the assembly by turning the socket counterclockwise until the tabs on the socket align with the slots on the assembly.
5. Remove the bulb from the socket by pressing it in and rotating it counterclockwise until the tabs on the bulb align with the slots in the socket. Pull the bulb out of the socket.
6. Insert a new bulb by inserting it into the socket and rotating it until it locks into place.
7. Install the socket into the assembly by aligning the tabs on the socket with the slots in the assembly. Push the socket into the assembly and turn the socket clockwise.
8. Reinstall the lamp assembly to the body of the vehicle.

High mounted stop lamp bulb replacement



If the high mounted stop lamp (1) does not operate, have your vehicle checked by a professional workshop. Kia recommends to visit an authorized Kia dealer/service partner.

License plate lamp bulb replacement

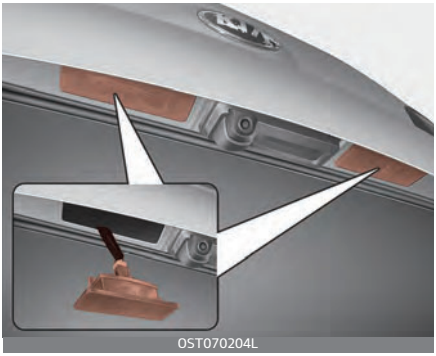
OST070204L

1. Using a flat-blade screwdriver, gently pry the lens cover from lamp housing.
2. Remove the socket from the assembly by turning the socket counterclockwise until the tabs on the socket align with the slots on the assembly.
3. Remove the bulb from bulb-socket by pulling it out.
4. Insert a new bulb by inserting it into the bulb-socket.
5. Install the socket in the assembly by aligning the tabs on the socket with the slots in the assembly. Push the socket into the assembly and turn the socket clockwise.
6. Align the lens cover tabs with the lamp housing notches and snap the lens into place.

Map lamp bulb replacement

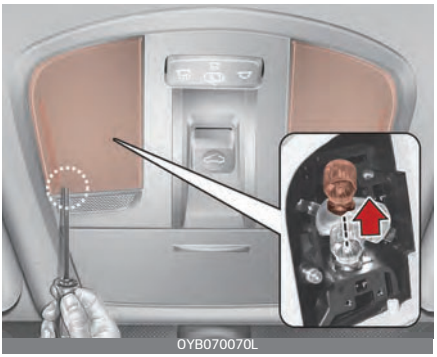
OYB070070L

⚠ WARNING

Prior to working on the Interior lamps, ensure that the "OFF" button is depressed to avoid burning your fingers or receiving an electric shock.

1. Using a flat-blade screwdriver, gently pry the lens cover from lamp housing.
2. Remove the bulb by pulling it straight out.
3. Install a new bulb in the socket.
4. Align the lens cover tabs with the lamp housing notches and snap the lens into place.

⚠ CAUTION

Be careful not to dirty or damage the lens, lens tab, and plastic housings.

Vanity mirror lamp bulb replacement


OYB070154L

⚠ WARNING

Prior to working on the Interior lamps, ensure that the "OFF" button is depressed to avoid burning your fingers or receiving an electric shock.

1. Using a flat-blade screwdriver, gently pry the lamp assembly from interior.
2. Remove the bulb by pulling it straight out.
3. Install a new bulb in the socket.
4. Install the lamp assembly to interior.

⚠ CAUTION

Be careful not to dirty or damage the lens, lens tab, and plastic housings.

Room lamp bulb replacement

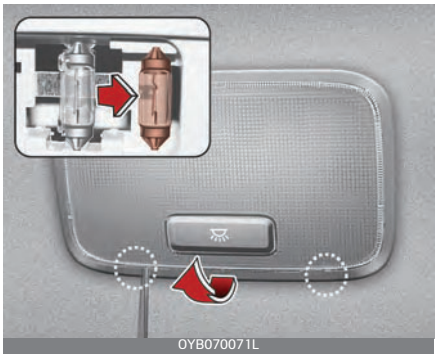
OYB070071L

⚠ WARNING

Prior to working on the Interior lamps, ensure that the "OFF" button is depressed to avoid burning your fingers or receiving an electric shock.

1. Using a flat-blade screwdriver, gently pry the lens cover from lamp housing.
2. Remove the bulb by pulling it straight out.
3. Install a new bulb in the socket.
4. Align the lens cover tabs with the lamp housing notches and snap the lens into place.

⚠ CAUTION

Be careful not to dirty or damage the lens, lens tab, and plastic housings.

Glove box lamp bulb replacement

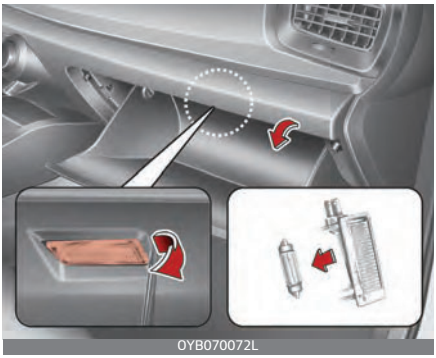
OYB070072L

1. Using a flat-blade screwdriver, gently pry the lamp assembly from interior.
2. Remove the bulb by pulling it straight out.
3. Install a new bulb in the socket.
4. Install the lamp assembly to interior.

⚠ CAUTION

Be careful not to dirty or damage the lens, lens tab, and plastic housings.

Tailgate room lamp bulb replacement

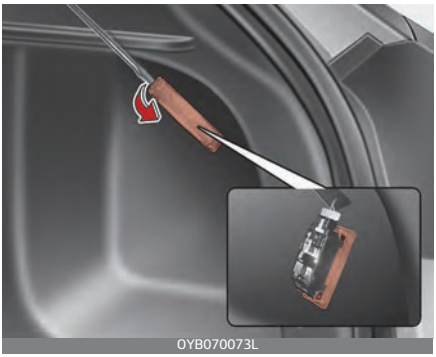
OYB070073L

1. Using a flat-blade screwdriver, gently pry the lens cover from lamp housing.
2. Remove the bulb by pulling it straight out.
3. Install a new bulb in the socket.
4. Align the lens cover tabs with the lamp housing notches and snap the lens into place.

⚠ CAUTION

Be careful not to dirty or damage the lens, lens tab, and plastic housings.

✻ NOTICE

If the LED lamp does not operate, have your vehicle checked by a professional workshop. Kia recommends to visit an authorized Kia dealer/service partner.

Headlamp and front fog lamp aiming (for Europe)

Headlamp aiming

Type A

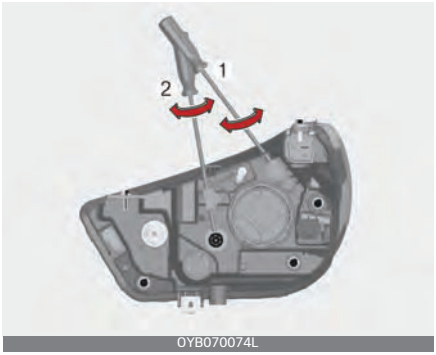

OYB070074L

Type B



OYB070075L

Type C

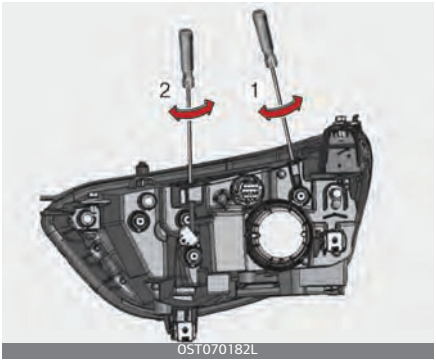

OST070182L

1. Inflate the tires to the specified pressure and remove any loads from the vehicle except the driver, spare tire, and tools.
2. The vehicle should be placed on a flat floor.
3. Draw vertical lines (Vertical lines passing through respective head lamp centers) and a horizontal line (Horizontal line passing through center of head lamps) on the screen.
4. With the head lamp and battery in normal condition, aim the head lamps so the brightest portion falls on the horizontal and vertical lines.
5. To aim the low and high beams left or right, turn the driver (1) clockwise or counterclockwise. To aim the low and high beams up or down, turn the driver (2) clockwise or counterclockwise.

Front fog lamp aiming

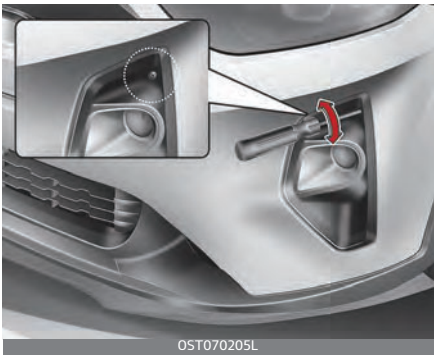

The front fog lamp can be aimed as the same manner of the head lamps aiming.

With the front fog lamps and battery normal condition, aim the front fog lamps.

To aim the front fog lamp up or down, turn the driver clockwise or counterclockwise.

Aiming point

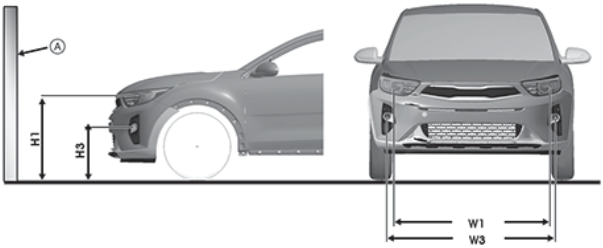

* A : Screen

Headlamp

vehicle condition	Headlamp (MFR type)		Headlamp (BI-FUNCTION type)	
	Ground Height	Distance between lamps	Ground Height	Distance between lamps
	Low/High beam	Low/High beam	Low/High beam	Low/High beam
	H1	W1	H1'	W1'
Without driver / [mm (in)]	757 (29.8)	1,259 (49.6)	760 (29.9)	1,250 (49.2)
With driver / [mm (in)]	747 (29.4)	1,259 (49.6)	750 (29.5)	1,250 (49.2)

vehicle condition	Headlamp (LED type)			
	Ground Height		Distance between lamps	
	Low beam	High beam	Low beam	High beam
	H1″	H2″	W1″	W2″
Without driver / [mm (in)]	756 (29.8)	740 (29.1)	1,378 (54.3)	1,112 (43.8)
With driver / [mm (in)]	751 (29.6)	735 (28.9)	1,378 (54.3)	1,112 (43.8)

Front fog lamp

Vehicle condition	Front Fog lamp (Bulb type)	
	Ground Height	Distance between lamps
	H3	W3
Without driver / [mm (in)]	493 (19.4)	1,431 (56.3)
With driver / [mm (in)]	483 (19.0)	1,431 (56.3)

Head lamp low beam (LHD Vehicle)

1. Turn the low beam on without driver aboard.
2. The cut-off line should be projected in the cut-off line shown in the picture.
3. When aiming the low beam, vertical aiming should be adjusted after adjusting the horizontal aiming.
4. If head lamp leveling device is equipped, adjust the head lamp leveling device switch with 0 positions.

Based on 10m screen

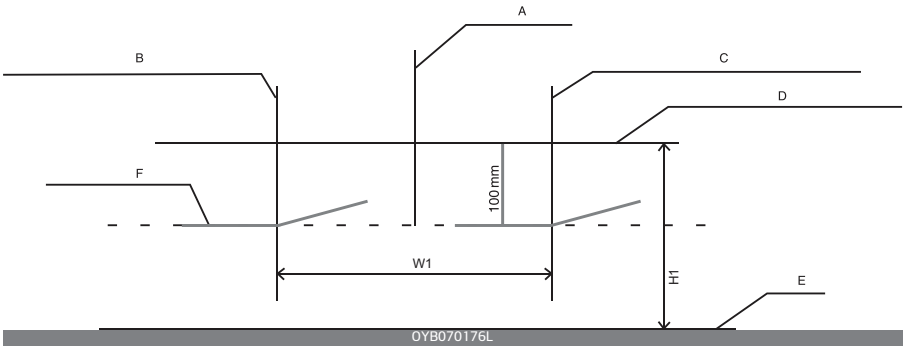

A : Vehicle axis
B : Vertical line of the left head lamp bulb center
C : Vertical line of the right head lamp bulb center
D : Horizontal line of head lamp bulb center
E : Ground
F : Cut-Off line

Head lamp low beam (RHD Vehicle)

1. Turn the low beam on without driver aboard.
2. The cut-off line should be projected in the cut-off line shown in the picture.
3. When aiming the low beam, vertical aiming should be adjusted after adjusting the horizontal aiming.
4. If head lamp leveling device is equipped, adjust the head lamp leveling device switch with 0 positions.

Based on 10m screen

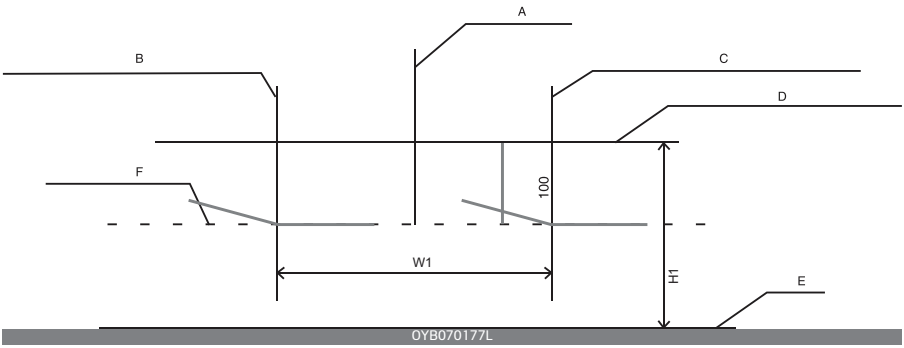

A : Vehicle axis
B : Vertical line of the left head lamp bulb center
C : Vertical line of the right head lamp bulb center
D : Horizontal line of head lamp bulb center
E : Ground
F : Cut-Off line

Front fog lamp

1. Turn the front fog lamp on without the driver aboard.
2. The cut-off line should be projected in the allowable range (shaded region).

Based on 10m screen

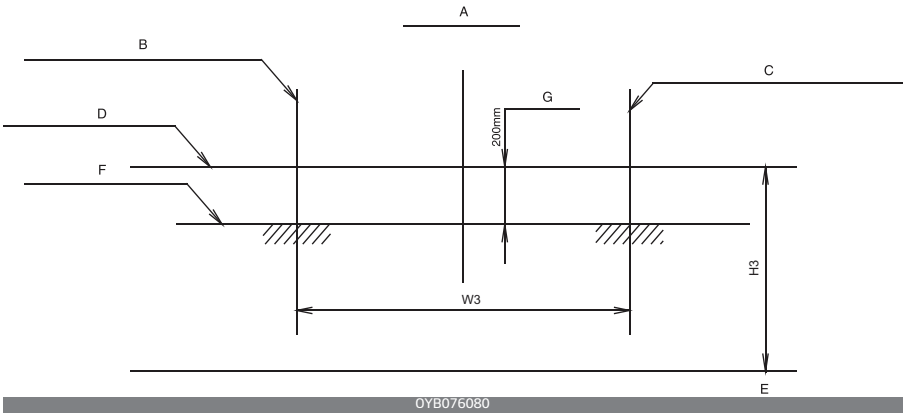

A : Vehicle axis
B : Vertical line of the left fog lamp bulb center
C : Vertical line of the right fog lamp bulb center
D : Horizontal line of fog lamp bulb center
E : Ground
F : Cut-Off line
G : Upper limit

Appearance care

Exterior care

NOTICE

If you park the vehicle around a stainless signboard or windshield building etc., the plastic exterior trim (bumper, spoiler, garnish, lamp, outside mirror etc.) may be damaged by reflected sunlight from the external structure. To avoid damaging the plastic exterior trim, park the vehicle away from the areas where the reflected light may occur or use a vehicle cover (Depending on the vehicle, the type of exterior trim applied such as spoiler may differ).

Exterior general caution

It is very important to follow the label directions when using any chemical cleaner or polish. Read all warning and caution statements that appear on the label.

Finish maintenance

Washing

To help protect your vehicle's finish from rust and deterioration, wash it thoroughly and frequently at least once a month with lukewarm or cold water.

If you use your vehicle for off-road driving, you should wash it after each off-road trip. Pay special attention to the removal of any accumulation of salt, dirt, mud, and other foreign materials. Make sure the drain holes in the lower edges of the doors and rocker panels are kept clear and clean.

Insects, tar, tree sap, bird droppings, industrial pollution and similar deposits can damage your vehicle's finish if not removed immediately.

Even prompt washing with plain water may not completely remove all these deposits. A mild soap, safe for use on painted surfaces, may be used.
After washing, rinse the vehicle thoroughly with lukewarm or cold water. Do not allow soap to dry on the finish.

CAUTION

- Do not use strong soap, chemical detergents or hot water, and do not wash the vehicle in direct sunlight or when the body of the vehicle is warm.
- Be careful when washing the side windows of your vehicle. Especially, with high-pressure water, water may leak through the windows and wet the interior.
- To prevent damage to the plastic parts and lamps, do not clean with

chemical solvents or strong detergents.

⚠ WARNING

Wet brakes

After washing the vehicle, test the brakes while driving slowly to see if they have been affected by water. If braking performance is impaired, dry the brakes by applying them lightly while maintaining a slow forward speed.

High-pressure washing

- When using high-pressure washers, make sure to maintain sufficient distance from the vehicle. Insufficient clearance or excessive pressure can lead to component damage or water penetration.
- Do not spray the camera, sensors or its surrounding area directly with a high pressure washer. Shock applied from high pressure water may cause the device to not operate normally.
- Do not bring the nozzle tip close to boots (rubber or plastic covers) or connectors as they may be damaged if they come into contact with high pressure water.


OYB070145L

⚠ CAUTION

- Water washing in the engine compartment including high pressure water washing may cause the failure of electrical circuits located in the engine compartment.
- Never allow water or other liquids to come in contact with electrical/electronic components inside the vehicle as this may damage them.

Waxing

Wax the vehicle when water will no longer bead on the paint.
Always wash and dry the vehicle before waxing. Use a good quality liquid or paste wax, and follow the manufacturer's instructions. Wax all metal trim to protect it and to maintain its luster.

Removing oil, tar, and similar materials with a spot remover will usually strip the wax from the finish. Be sure to re-wax these areas even if

the rest of the vehicle does not yet need waxing. Do not apply wax on embossed unpainted unit, as it may tarnish the unit.

⚠ CAUTION

- Wiping dust or dirt off the body with a dry cloth will scratch the finish.
- Do not use steel wool, abrasive cleaners, acid detergents or strong detergents containing high alkaline or caustic agents on chrome-plated or anodized aluminum parts. This may result in damage to the protective coating and cause discoloration or paint deterioration.

Finish damage repair

Deep scratches or stone chips in the painted surface must be repaired promptly. Exposed metal will quickly rust and may develop into a major repair expense.

✻ NOTICE

If your vehicle is damaged and requires any metal repair or replacement, be sure the body shop applies anti-corrosion materials to the parts repaired or replaced.

Bright-metal maintenance

- To remove road tar and insects, use a tar remover, not a scraper or other sharp object.
- To protect the surfaces of bright-metal parts from corrosion, apply a coating of wax or chrome preservative and rub to a high luster.
- During winter weather or in coastal areas, cover the bright metal parts with a heavier coating of wax or preservative. If necessary, coat the parts with non-corrosive petroleum jelly or other protective compound.

Underbody maintenance

Corrosive materials used for ice and snow removal and dust control may collect on the underbody. If these materials are not removed, accelerated rusting can occur on underbody parts such as the fuel lines, frame, floor pan and exhaust system, even though they have been treated with rust protection.

Thoroughly flush the vehicle underbody and wheel openings with lukewarm or cold water once a month, after off-road driving and at the end of each winter. Pay special attention to these areas because it is difficult to see all the mud and dirt. It will do more harm than good to wet down the road grime without removing it. The lower edges of the

doors, rocker panels, and frame members have drain holes that should not clog with dirt; trapped water in these areas can cause rusting.

⚠ WARNING

After washing the vehicle, test the brakes while driving slowly to see if they have been affected by water. If braking performance is impaired, dry the brakes by applying them lightly while maintaining a slow forward speed.

Aluminum wheel maintenance

The aluminum wheels are coated with a clear protective finish.

- Do not use any abrasive cleaner, polishing compound, solvent, or wire brushes on aluminum wheels. They may scratch or damage the finish.
- Clean the wheel when it has cooled.
- Use only a mild soap or neutral detergent, and rinse thoroughly with water. Also, be sure to clean the wheels after driving on salted roads.This helps prevent corrosion.
- Avoid washing the wheels with high-speed car wash brushes.
- Do not use any alkaline or acid detergent. It may damage and corrode the aluminum wheels coated with a clear protective finish.

Corrosion protection

Protecting your vehicle from corrosion

By using the most advanced design and construction practices to combat corrosion, we produce vehicles of the highest quality. However, this is only part of the job. To achieve the longterm corrosion resistance your vehicle can deliver, the owner's cooperation and assistance is also required.

Common causes of corrosion

The most common causes of corrosion on your vehicle are:

- Road salt, dirt and moisture that is allowed to accumulate underneath the vehicle.
- Removal of paint or protective coatings by stones, gravel, abrasion or minor scrapes and dents which leave unprotected metal exposed to corrosion.

High-corrosion areas

If you live in an area where your vehicle is regularly exposed to corrosive materials, corrosion protection is particularly important. Some of the common causes of accelerated corrosion are road salts, dust

control chemicals, ocean air and industrial pollution.

Moisture breeds corrosion

Moisture creates the conditions in which corrosion is most likely to occur. For example, corrosion is accelerated by high humidity, particularly when temperatures are just above freezing. In such conditions, the corrosive material is kept in contact with the vehicle's surface by moisture that evaporate slowly. Mud is particularly corrosive because it dries slowly and holds moisture in contact with the vehicle. Although the mud appears to be dry, it can still retain moisture and promote corrosion.
High temperatures can also accelerate corrosion of parts that are not properly ventilated so the moisture can be dispersed.

For all these reasons, it is particularly important to keep your vehicle clean and free of mud or accumulations of other materials. This applies not only to the visible surfaces but particularly to the underside of the vehicle.

To help prevent corrosion

You can help prevent corrosion from getting started by observing the following:

Keep your vehicle clean
The best way to prevent corrosion is to keep your vehicle clean and free of corrosive materials. Attention to the underside of the vehicle is particularly important.

- If you live in a high-corrosion area — where road salts are used, near the ocean, areas with industrial pollution, acid rain, etc.—, you should take extra care to prevent corrosion. In winter, hose off the underside of your vehicle at least once a month and be sure to clean the underside thoroughly when winter is over.
- When cleaning underneath the vehicle, give particular attention to the components under the fenders and other areas that are hidden from view. Do a thorough job; just dampening the accumulated mud rather than washing it away will accelerate corrosion rather than prevent it. Water under high pressure and steam are particularly effective in removing accumulated mud and corrosive materials.
- When cleaning lower door panels, rocker panels and frame members, be sure that drain holes are kept open so that moisture can escape and not be trapped inside to accelerate corrosion.

Keep your garage dry
Don't park your vehicle in a damp, poorly ventilated garage. This creates a favorable environment for corrosion. This is particularly true if you wash your vehicle in the garage or drive it into the garage when it is still wet or covered with snow, ice or mud. Even a heated garage can contribute to corrosion unless it is well ventilated so moisture is dispersed.

Keep paint and trim in good condition
Scratches or chips in the finish should be covered with "touch-up" paint as soon as possible to reduce the possibility of corrosion. If bare metal is showing through, the attention of a qualified body and paint shop is recommended.
Bird droppings : Bird droppings are highly corrosive and may damage painted surfaces in just a few hours. Always remove bird droppings as soon as possible.

Don't neglect the interior
Moisture can collect under the floor mats and carpeting and cause corrosion. Check under the mats periodically to be sure the carpeting is dry. Use particular care if you carry fertilizers, cleaning materials or chemicals in the vehicle.
These should be carried only in proper containers and any spills or leaks should be cleaned up, flushed with clean water and thoroughly dried.

Interior care

Interior general precautions

Prevent chemicals such as perfume, cosmetic oil, sun cream, hand cleaner, and air freshener from contacting the interior parts because they may cause damage or discoloration. If they do contact the interior parts, wipe them off immediately. If necessary, use a vinyle cleaner, see instructions for correct usage.

⚠ CAUTION

Never allow water or other liquids to come in contact with electrical/electronic components inside the vehicle as this may damage them.

⚠ CAUTION

When cleaning leather products (steering wheel, seats etc.), use neutral detergents or low alcohol content solutions. If you use high alcohol content solutions or acid/alkaline detergents, the color of the leather may fade or the surface may get stripped off.

Taking care of leather seats

- Vacuum the seat periodically to remove dust and sand on the seat. It will prevent abrasion or damage of the leather and maintain its quality.

- Wipe the natural leather seat cover often with dry or soft cloth.
- Sufficient use of a leather protective may prevent abrasion of the cover and helps maintain the color.
  Be sure to read the instructions and consult a specialist when using leather coating or protective agents.
- Leather with bright colors(beige, cream beige) is easily contaminated and clear in appearance. Clean the seats frequently.
- Avoid wiping with wet cloth. It may cause the surface to crack.

Cleaning the leather seats

- Remove all contaminations instantly. Refer to instructions below for removal of each contaminant.
- Cosmetic products (sunscreen, foundation, etc.)
  - Apply cleansing cream on a cloth and wipe the contaminated point. Wipe off the cream with a wet cloth and remove water with a dry cloth.
- Beverages (coffee, soft drink, etc.)
  - Apply a small amount of neutral detergent and wipe until contaminations do not smear.
- Oil
  - Remove oil instantly with absorbable cloth and wipe with stain remover for natural leather only.
- Chewing gum
  - Harden the gum with ice and remove gradually.

Fabric seat cover using precautions (if equipped)

Please clean the fabric seats regularly with a vacuum cleaner in consideration of fabric material characteristics. If they are heavily soiled with beverage stains, etc., use a suitable interior cleaner. To prevent damage to seat covers, wipe off the seat covers down to the seams with a large wiping motion and moderate pressure using a soft sponge or microfiber cloth.

Velcro closures on clothing or sharp objects may cause snagging or scratches on the surface of the seats. Make sure not to rub such objects against the surface.

Cleaning the upholstery and interior trim

Vinyl

Remove dust and loose dirt from vinyl with a whisk broom or vacuum cleaner. Clean vinyl surfaces with a vinyl cleaner.

Fabric

Remove dust and loose dirt from fabric with a whisk broom or vacuum cleaner. Clean with a mild soap solution recommended for upholstery or carpets. Remove fresh spots immediately with a fabric spot cleaner. If fresh spots do not receive immediate attention, the fabric can be stained and its color can be affected. Also, its fire-resistant properties can be reduced if the material is not properly maintained.

⚠ CAUTION

Using anything but recommended cleaners and procedures may affect the fabric's appearance and fire-resistant properties.

Cleaning the lap/shoulder belt webbing

Clean the belt webbing with any mild soap solution recommended for cleaning upholstery or carpet. Follow the instructions provided with the soap. Do not bleach or re-dye the webbing because this may weaken it.

Cleaning the interior window glass

If the interior glass surfaces of the vehicle become fogged (that is, covered with an oily, greasy or waxy film), they should be cleaned with a glass cleaner. Follow the directions on the glass cleaner container.

⚠ CAUTION

Do not scrape or scratch the inside of the rear window. This may result in damage of the rear window defroster grid.

Emission control system (if equipped)

The emission control system of your vehicle is covered by a written limited warranty. Please see the warranty information contained in the Warranty & Maintenance book in your vehicle.

Your vehicle is equipped with an emission control system to meet all applicable emission regulations.

There are three emission control systems, as follows.

1. Crankcase emission control system
2. Evaporative emission control system
3. Exhaust emission control system

In order to assure the proper function of the emission control systems, have your vehicle inspected and maintained by a professional workshop in accordance with the maintenance schedule in this manual. Kia recommends to visit an authorized Kia dealer/service partner.

Caution for the Inspection and Maintenance Test (With Electronic Stability Control (ESC) system)

- **To prevent the vehicle from misfiring during dynamometer testing, turn the Electronic Stability Control (ESC) system off by pressing the ESC switch.**
- **After dynamometer testing is completed, turn the ESC system back on by pressing the ESC switch again.**

1. Crankcase emission control system

The positive crankcase ventilation system is employed to prevent air pollution caused by blow-by gases being emitted from the crankcase. This system supplies fresh filtered air to the crankcase through the air intake hose. Inside the crankcase, the fresh air mixes with blow-by gases, which then pass through the PCV valve into the induction system.

2. Evaporative emission control system

The Evaporative Emission Control System is designed to prevent fuel vapors from escaping into the atmosphere.

Canister

Fuel vapors generated inside the fuel tank are absorbed and stored in the onboard canister. When the engine is running, the fuel vapors absorbed in the canister are drawn into the surge tank through the purge control solenoid valve.

Purge Control Solenoid Valve (PCSV)

The purge control solenoid valve is controlled by the Engine Control Module (ECM); when the engine coolant temperature is low during idling, the PCSV closes so that evaporated fuel is not taken into the engine. After the engine warms up during ordinary driving, the PCSV opens to introduce evaporated fuel to the engine.

3. Exhaust emission control system

The Exhaust Emission Control System is a highly effective system which controls exhaust emissions while maintaining good vehicle performance.

Engine exhaust gas precautions (carbon monoxide)

- Carbon monoxide can be present with other exhaust fumes. Therefore, if you smell exhaust fumes of any kind inside your vehicle, have it inspected and repaired immediately. If you ever suspect exhaust fumes are coming into your vehicle, drive it only with all the windows fully open. Have your vehicle checked and repaired immediately.

⚠ WARNING

Exhaust

Engine exhaust gases contain carbon monoxide (CO). Though colorless and odorless, it is dangerous and could be lethal if inhaled. Follow the instructions on this page to avoid CO poisoning.

- Do not operate the engine in confined or closed areas (such as garages) any more than what is necessary to move the vehicle in or out of the area.
- When the vehicle is stopped in an open area for more than a short time with the engine running, adjust the ventilation system (as needed) to draw outside air into the vehicle.
- Never sit in a parked or stopped vehicle for any extended time with the engine running.
- When the engine stalls or fails to start, excessive attempts to restart the engine may cause damage to the emission control system.

Operating precautions for catalytic converters (if equipped)

⚠ WARNING

Fire

- A hot exhaust system can ignite flammable items under your vehi-

cle. Do not park the vehicle over or near flammable objects, such as grass, vegetation, paper, leaves, etc.
- The exhaust system and catalytic system are very hot while the engine is running or immediately after the engine is turned off. Keep away from the exhaust system and catalytic, you may get burned.
  Also, do not remove the heat sink around the exhaust system, do not seal the bottom of the vehicle or do not coat the vehicle for corrosion control. It may present a fire risk under certain conditions.

Your vehicle is equipped with a catalytic converter emission control device.

Therefore, the following precautions must be observed:
- Make sure to refuel your vehicle according to the "Fuel requirements" suggested in chapter 1.
- Do not operate the vehicle when there are signs of engine malfunction, such as misfire or a noticeable loss of performance.
- Do not misuse or abuse the engine. Examples of misuse are coasting with the ignition off and descending steep grades in gear with the ignition off.
- Do not operate the engine at high idle speed for extended periods (5 minutes or more).
- Do not modify or tamper with any part of the engine or emission control system. All inspections and adjustments must be made by a professional workshop. Kia recommends to visit an authorized Kia dealer/service center.
- Avoid driving with an extremely low fuel level. Running out of fuel could cause the engine to misfire, damaging the catalytic converter.

Failure to observe these precautions could result in damage to the catalytic converter and to your vehicle.

Additionally, such actions could void your warranties.

Gasoline Particulate Filter (GPF) (if equipped)

The Gasoline Particulate Filter (GPF) is the system that removes the soot from the exhaust gas. Unlike a disposable air filter, the GPF system automatically burns (oxidizes) and removes the accumulated soot while driving.

However, repeated short-distance driving or long-distance driving at a low speed can stop the accumulated soot from automatically being removed by the GPF system. If the accumulated soot reaches a certain amount, the GPF warning light ()

will illuminate. To re-operate the GPF system, the vehicle should be driven for more than 30 minutes at a speed of 80 km/h (50 mph) and faster. Ensure the following conditions are met: safe road conditions, transmission 3 or above, and engine speed of 1,500-4,000 rpm. Driving at 80 km/h (50 mph) or faster for recommended hours will get the GPF system back to work and stop the GPF warning light.

If the GPF warning light stays on or the warning message "Check exhaust system" pops up even after driving at recommended speed and for recommended hours, visit a professional workshop and check the GPF system. Kia recommends to visit an authorized Kia dealer/service partner. Constant driving with the GPF warning light on can damage the GPF system and undermine fuel economy.

Specifications & Consumer information 8

Engine **8-2**
Dimensions **8-3**
Bulb wattage **8-4**
Tires and wheels **8-5**
Weight/volume **8-7**
Air conditioning system **8-7**
Recommended lubricants and capacities **8-8**
Vehicle identification number (VIN) **8-12**
Vehicle certification label **8-13**
Tire specification and pressure label **8-13**
Engine number **8-14**
Air conditioner compressor label **8-15**
Refrigerant label **8-15**
Declaration of conformity **8-16**
Fuel label **8-16**
• Gasoline (Petrol) engine 8-16

Specifications & Consumer information

Engine

Item	Smartstream G1.0 T-GDi	Smartstream G1.0 T-GDi 48V HEV	Smartstream G1.2	(Gasoline engine) 1.4 MPI
Displacement / [cc(cu.in)	998 (60.9)	998 (60.9)	1,197 (73.04)	1,368 (83.48)
Bore x Stroke / [mm(in)]	71 x 84 (2.8 x 3.3)	71 x 84 (2.8 x 3.3)	71.0 x 75.6 (2.79 x 2.97)	72 x 84 (2.83 x 3.30)
Firing order	1-2-3	1-2-3	1-3-4-2	1-3-4-2
No. of cylinders	3	3	4, In-line	4, In-line

Dimensions

Item		mm (in)
Overall length		4,140 (163.0)
Overall width		1,760 (69.3)
Overall height	Without roof rack	1,485 (58.5) (15″ tire) 1,505 (59.3) (17″ tire)
	With roof rack	1,500 (59.1) (15″ tire) 1,520 (59.8) (17″ tire)
Front tread	185/65R15	1,537 (60.5)
	195/55R16	1,531 (60.2)
	205/55R17	1,531 (60.2)
Rear tread	185/65R15	1,544 (60.8)
	195/55R16	1,539 (60.6)
	205/55R17	1,539 (60.6)
Wheelbase		2,580 (101.6)

Bulb wattage

Light Bulb			Wattage (W)	Bulb type
Front	Head lamp (Low/High)	Type A	55W/60W	H4
		Type B	60W/60W	HB3
		Type C	LED	LED
	Static bending light*		55W	H7
	Daytime running light		21W or LED	P21W or LED
	Position lamp		55W or LED	W5W or LED
	Turn signal lamp		21W	PY21W
	Front fog lamp*		51W or LED	HB4 or LED
Rear	Tail lamp	Inside	5W or LED	W5W or LED
		Outside	5W or LED	P21/5W or LED
	Stop lamp	Inside	LED	LED
		Outside	21W or LED	P21/5W or LED
	Turn signal lamp		21W	PY21W
	Back up lamp		16W	W16W
	Rear fog light*		21W	P21W
	High mounted stop lamp		5W X 4EA	W5W
	License plate lamp		5W X 2EA	W5W
Interior	Map lamps		10W X 2EA	W10W
	Room lamp		8W	FESTOON
	Luggage lamp		8W	FESTOON
	Glove box lamp*		8W	FESTOON
	Vanity mirror lamps*		5W	FESTOON

* If equipped

Tires and wheels

Item	Tire size	Wheel size	Load Capacity		Speed capacity		Inflation pressure [bar(psi, kPa)]				Wheel lug nut torque Kgf·m (lbf·ft, N·m)
							Normal load		Maximum load		
			LI*1	Kg	SS*2	Km/h	Front	Rear	Front	Rear	
Full size tire	185/65R15	6.0J×15	88	560	H	210	2.35 (34, 235)	2.15 (31, 215)	2.4 (35, 240)	2.5 (36, 250)	11 ~ 13 (79 ~ 94, 107 ~ 127)
	195/55R16	6.0J×16	87	545	H	210	2.35 (34, 235)	2.15 (31, 215)	2.4 (35, 240)	2.6 (38, 260)	
	205/55R17	6.5J×17	91	615	V	240	2.35 (34, 235)	2.15 (31, 215)	2.4 (35, 240)	2.6 (38, 260)	
Com-pact spare tire	T125/80D15	3.5J X 15	95	690	M	130	4.2 (60, 420)	4.2 (60, 420)	4.2 (60, 420)	4.2 (60, 420)	
	T125/80D16	4.0T x 16	97	730	M	130	4.2 (60, 420)	4.2 (60, 420)	4.2 (60, 420)	4.2 (60, 420)	

*1. : Load Index
*2. : Speed Symbol

✻ NOTICE

- We recommend that when replacing tires, use the same originally supplied with the vehicles.
  If not, that affects driving performance.
- When driving in high altitude grades, it is natural for the atmospheric pressure to decrease.
  Therefore, please check the tire pressure and add more air when necessary.
  Additionally required tire air pressure per km above sea level: 1.5psi/km
- Must do not exceed maximum inflation pressure shown on equipped tire sidewall.

⚠ CAUTION

When replacing tires, use the same size originally supplied with the vehicle.
Using tires of a different size can damage the related parts or make it work irregularly.

Weight/volume

Item		Smartstream G1.0 T-GDi		Smartstream G1.0 T-GDi 48V HEV		Smart stream G1.2	(Gasoline engine) 1.4 MPI	
		6M/T	7DCT	6iMT	7DCT	5M/T	6M/T	6A/T
Gross vehicle weight kg / (lbs.)	For Europe	1,650 (3,638)	1,680 (3,704)	1,680 (3,704)	1,710 (3,770)	1,600 (3,527)	-	-
	For Australia	-	1,680 (3,704)	-	-	-	1,610 (3,549)	1,640 (3,616)
Luggage volume / l (cu ft)	MIN	352 (12.4)						
	MAX	1,155 (40.8)						

Air conditioning system

ITEM	Weight of volume	Classification
Refrigerant	450 ± 25g	R-1234yf
		R-134a
Compressor lubricant	120 ±10g	PAG 30

Please contact a professional workshop for more details.
Kia recommends to contact an authorized Kia dealer/service partner.

Recommended lubricants and capacities

To help achieve proper engine and powertrain performance and durability, use only lubricants of the proper quality.
The correct lubricants also help promote engine efficiency that results in improved fuel economy.
These lubricants and fluids are recommended for use in your vehicle.

<table>
<tr><th colspan="3">Lubricant</th><th>Volume</th><th>Classification</th></tr>
<tr><td rowspan="4">Engine oil*1*2 (drain and refill) Recommends
TOTAL QUARTZ</td><td colspan="2">Smartstream G1.0 T-GDi</td><td rowspan="2">3.6 l (3.8 US qt.)</td><td rowspan="3">SAE 0W20, API SN PLUS/SP or ILSAC GF-6 *3
SAE 5W30, API LATEST or ACEA A5/B5 *4</td></tr>
<tr><td colspan="2">Smartstream G1.0 T-GDi 48V HEV</td></tr>
<tr><td colspan="2">Smartstream G1.2</td><td>3.4 l (3.6 US qt.)</td></tr>
<tr><td colspan="2">(Gasoline engine) 1.4 MPI</td><td>3.5 l (3.7 US qt.)</td><td>SAE 0W20, API LATEST or ACEA C5 *3
SAE 5W30, API LATEST or ACEA A5/B5 *4</td></tr>
<tr><td rowspan="3">Manual transmission fluid</td><td colspan="2">Smartstream G1.2</td><td>1.3 ~ 1.4 l (1.4 ~ 1.5 US qt.)</td><td rowspan="3">API GL-4, SAE 70W
- SK : HK SYN MTF 70W
- H.K.SHELL:SPIRAX S6 GHME 70W MTF
- GS CALTEX: GS MTF HD 70W</td></tr>
<tr><td colspan="2">Smartstream G1.0 T-GDi</td><td rowspan="2">1.5~1.6 l (1.6~1.7 US qt.)</td></tr>
<tr><td colspan="2">(Gasoline engine) 1.4 MPI</td></tr>
<tr><td>Automatic transmission fluid</td><td>(Gasoline engine) 1.4 MPI</td><td>6 A/T</td><td>7.2 l (7.6 US qt.)</td><td>ATF SP-IV (Recommended MICHANG, SK, NOCA, Kia genuine)</td></tr>
<tr><td rowspan="2">Dual clutch transmission</td><td colspan="2">Smartstream G1.0 T-GDi</td><td rowspan="2">1.6~1.7 l (1.7~1.8 US qt.)</td><td rowspan="2">API GL-4, SAE 70W
- HK D DCTF TGO-10 (SK)
- SPIRAX S6 GHDE 70W DCTF (H.K.SHELL)
- 7 DCTF HKM (S-OIL)</td></tr>
<tr><td colspan="2">Smartstream G1.0 T-GDi 48V HEV</td></tr>
</table>

Lubricant			Volume	Classification
Coolant	Smartstream G1.0 T-GDi	6M/T	5.9 l (6.2 US qt.)	Mixture of antifreeze and water (Ethylene glycol base coolant for aluminum radiator)
		7DCT		
	Smartstream G1.0 T-GDi 48V HEV	6iMT	5.9 l (6.2 US qt.)	
		7DCT		
	Smartstream G1.2	5M/T	5.4 l (5.7 US qt.)	
	(Gasoline engine) 1.4 MPI	6M/T	4.9 l (5.2 US qt.)	
		6A/T	5.1 l (5.4 US qt.)	
Brake / clutch fluid *5			0.7~0.8 l (0.7 ~ 0.8 US qt.)	SAE J1704 DOT-4 LV, ISO4925 CLASS-6, FMVSS116 DOT-4
Intelligent Manual Transmission system actuator fluid	Smartstream G1.0 T-GDi 48V HEV		0.082 l (0.087 US qt.)	SAE J1704 DOT-4 LV, ISO4925 CLASS-6, FMVSS116 DOT-4, FMVSS116 DOT-3
Fuel			45 / (11.9 US gal.)	-

*1. : Refer to the recommended SAE viscosity numbers on the next page.
*2. :If the above recommended specification oil is not available, SAE 0W-20 grade synthetic oil can be used. (Except India, Middle East, Iran, Libia, Algeria, Sudan, Morocco, Tunisia, Egypt, Central & South America)
*3. :Except India, Middle East, Iran, Libia, Algeria, Sudan, Morocco, Tunisia, Egypt, Central & South America
*4. : For India, Middle East, Iran, Libia, Algeria, Sudan, Morocco, Tunisia, Egypt, Central & South America
*5. : To maintain your vehicle's best brake and ABS/ESC performance, use Kia genuine brake fluid as in the specification.

Recommended SAE viscosity number

⚠ CAUTION

Always be sure to clean the area around any filler plug, drain plug, or dipstick before checking or draining any lubricant. This is especially important in dusty or sandy areas and when the vehicle is used on unpaved roads. Cleaning the plug and dipstick areas will prevent dirt and grit from entering the engine and other mechanisms that could be damaged.

Engine oil viscosity (thickness) has an effect on fuel economy and cold weather operating (engine start and engine oil flowability). Lower viscosity engine oils can provide better fuel economy and cold weather performance, however, higher viscosity engine oils are required for satisfactory lubrication in hot weather. Using oils of any viscosity other than those recommended could result in engine damage.

When choosing an oil, consider the range of temperature your vehicle will be operated in before the next oil change. Proceed to select the recommended oil viscosity from the chart.

Temperature Range for SAE Viscosity Numbers										
Temperature	°C	-30	-20	-10	0	10	20	30	40	50
	(°F)	-10	0	20	40	60	80	100		120
Gasoline Engine Oil	*1	0W-20								
	*2	5W-30								

*1. : - Smartstream G1.0 T-GDi, Smartstream G1.0 T-GDi 48V HEV, Smartstream G1.2 : Except Middle east, Iran, Libia, Algeria, Sudan, Tunisia, Egypt
- (Gasoline engine) 1.4 MPI : Except India, Middle east, Iran, Libia, Algeria, Sudan, Tunisia, Egypt
If the above recommended specification oil is not available, SAE 0W-20 grade synthetic oil can be used. If mineral oil or semi-synthetic oil is used, it is a severe maintenance condition in terms of engine oil change.
*2. : - Smartstream G1.0 T-GDi, Smartstream G1.0 T-GDi 48V HEV, Smartstream G1.2 : For Middle east, Iran, Libia, Algeria, Sudan, Tunisia, Egypt
- (Gasoline engine) 1.4 MPI : For India, Middle east, Iran, Libia, Algeria, Sudan, Tunisia, Egypt
If the above recommended specification oil is not available, SAE 5W-30 grade synthetic oil can be used. If mineral oil or semi-synthetic oil is used, it is a severe maintenance condition in terms of engine oil change.



An engine oil displaying this American Petroleum Institute (API) Certification Mark conforms to the International Lubricant Specification Advisory Committee (ILSAC). It is recommended to only use engine oils that uphold this API Certification Mark.

Vehicle identification number (VIN)

Type A

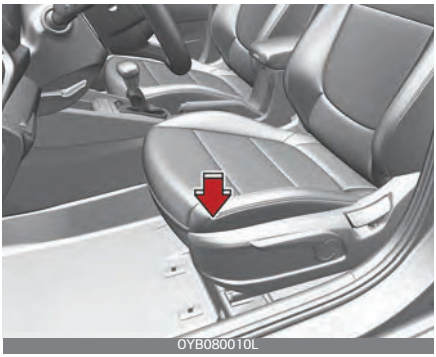

The vehicle identification number (VIN) is the number used in registering your car and in all legal matters pertaining to its ownership, etc.

The number is punched on the floor under the passenger seat. To check the number, remove the cover.

VIN label

Type B (if equipped)

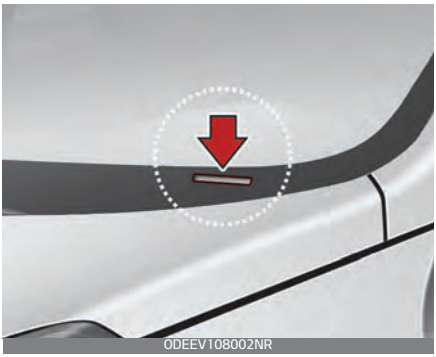

The VIN is also on a plate attached to the top of the dashboard. The number on the plate can easily be seen through the windshield from outside.

Vehicle certification label (if equipped)



The vehicle certification label attached on the driver's (or front passenger's) side center pillar gives the vehicle identification number (VIN).

Tire specification and pressure label



The tires supplied on your new vehicle are chosen to provide the best performance for normal driving.

The tire label located on the driver's side center pillar gives the tire pressures recommended for your car.

Engine number

Smartstream G1.0 T-GDi

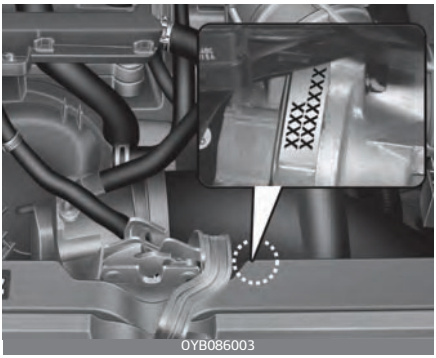

Smartstream G1.2

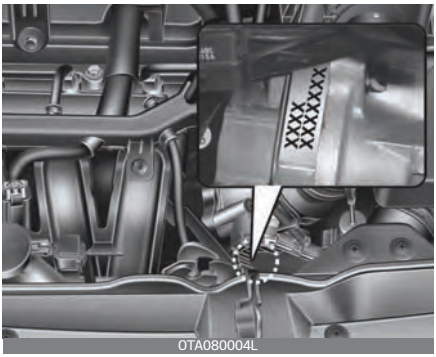

(Gasoline engine) 1.4 MPI

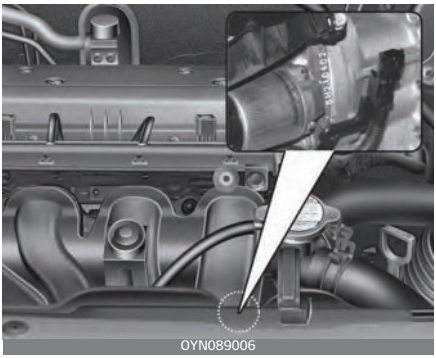

The engine number is stamped on the engine block as shown in the drawing.

Air conditioner compressor label

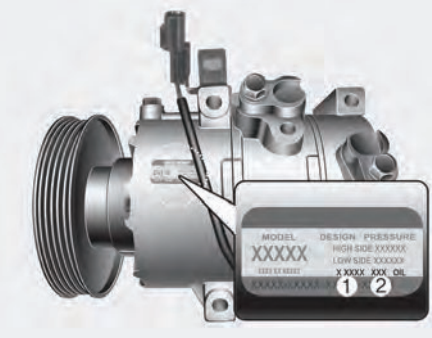

OSK3068047NR

A compressor label informs you the type of compressor your vehicle is equipped with such as model, supplier part number, production number, refrigerant (1) and refrigerant oil (2).

Refrigerant label (if equipped)

Type A

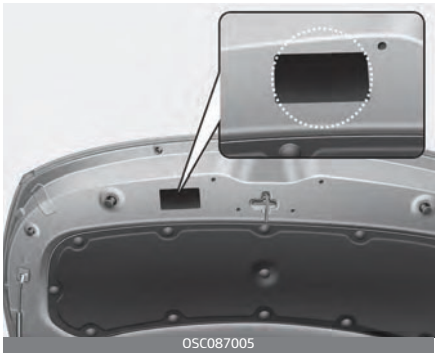
OSC087005

Type B

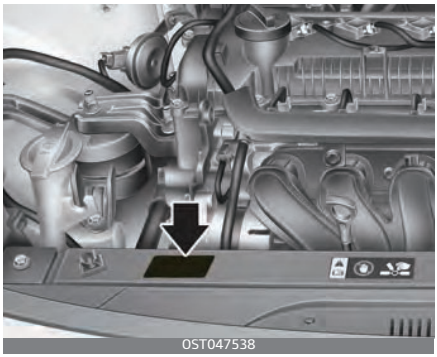
OST047538

The refrigerant label is located :

- Type A : The underside of the hood
- Type B : The front of the engine room.

Declaration of conformity

Example

CE 0678

CE0678

The radio frequency components of the vehicle comply with requirements and other relevant provisions of Directive 1995/5/EC.

Further information including the manufacturer's declaration of conformity is available on Kia web site as follows;
http://www.kia-hotline.com

Fuel label (if equipped)

Gasoline (Petrol) engine

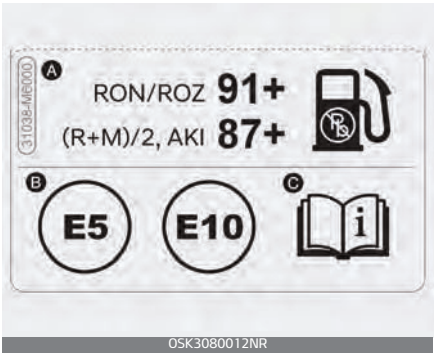

OSK3080012NR

The fuel label is attached on the fuel filler door.

A. Octane rating of unleaded Gasoline (Petrol)
1. RON/ROZ : Research Octane Number
2. (R+M)/2, AKI : Anti Knock Index

B. Identifiers for Petrol-type fuels

* This symbol means usable fuel. Do not use any other fuel.

C. For further details, refer to "Fuel requirements" on page 1-2.

Appendix 9

Зимно шофиране 9-2
• Условия на сняг или лед 9-2
• Зимни гуми 9-3
Vetrarakstur 9-6
• Aðstæður í snjó eða hálku 9-6
• Snjóhjólbarðar 9-7

Appendix

Зимно шофиране



По-тежките метеорологични условия през зимата водят до по голямо износване и други проблеми. За да сведете до минимум проблемите при зимно шофиране, трябва да следвате тези предписания:

Условия на сняг или лед

За да шофирате вашия автомобил в дълбок сняг, може да е необходимо използването на зимни гуми или поставянето на вериги за сняг на вашите гуми. Ако са ви нужни зимни гуми, необходимо е да изберете такива, които са еднакви по размер и тип с оригиналните гуми. Ако не го направите, това може да повлияе негативно върху сигурността и управляемостта на вашия автомобил. Освен това шофирането с превишена скорост, бързото ускоряване, внезапното използване на спирачки и рязкото завиване могат да бъдат много опасни.

При намаляване на скоростта използвайте двигателната спирачка възможно най-много. Внезапното използване на спирачки по снежна и заледена настилка може да доведе до подхлъзване. Необходимо е да спазвате достатъчно голяма дистанция между автомобила, който се движи пред вас, и вашия автомобил. Освен това натискайте спирачката леко. Трябва да се има предвид, че поставянето на вериги за сняг върху гумите ще осигури по голяма задвижваща сила, но няма да предотврати страничното занасяне.

※ ВНИМАНИЕ

Веригите за гуми не са позволени от закона във всички държави. Проверете законите на държавата, преди да сложите вериги за гуми.

Зимни гуми

Когато монтирате гуми за сняг на автомобила, уверете се, че са със същия размер като оригиналните и използвайте препоръчаните гуми в това ръководство. Използването на гуми, различни от препоръчителните, може да доведе до необичаен шум по време на шофиране. Максималното тегло, което гумите могат да издържат, е различно за различните автомобили, така че не забравяйте да използвате гуми с подходящ размер.

Монтирайте гуми за сняг и на четирите колела, за да балансирате експлоатацията на автомобила при всякакви атмосферни условия. Имайте предвид, че сцеплението, което осигуряват зимните гуми при суха настилка, може да не е толкова високо като това на оригиналните гуми на автомобила ви. Трябва да шофирате внимателно дори когато пътищата са чисти.

Консултирайте се с доставчика на гумите за допустимата максимална скорост.

※ Препоръчителни гуми

185/65 R15	205/55 R17
Kumho (WINTERCRAFT WP71)	
Continental (CONTI PREMIUM CONTACT5, WINTER CONTACT TS850P)	

⚠ ПРЕДУПРЕЖДЕНИЕ

Размер на зимните гуми

Зимните гуми трябва да са еднакви по размер и тип със стандартните гуми на автомобила. В противен случай сигурността и управляемостта на вашия автомобил могат да бъдат повлияни негативно.

Не поставяйте гуми с шипове преди първо да проверите за възможни ограничения за използването на такива в местните, щатските и общинските разпоредби.

Вериги за гуми



Тъй като страничните стени на радиалните гуми са по-тънки, те могат да се повредят при монтирането на някои типове вериги за гуми върху тях. Поради това се препоръчва използване на зимни гуми, вместо вериги за сняг. Не монтирайте вериги за гуми на автомобили, оборудвани с алуминиеви джанти – веригите за сняг могат да повредят джантите. Ако се налага използването на вериги за сняг, използвайте кабелни вериги с дебелина, помалка от 12 mm (0,47 инча). Повреди по вашия автомобил, предизвикани от използването на неподходящи вериги за сняг, не се покриват от гаранцията на производителя на автомобила ви.

Поставете вериги за гуми само на предните гуми.

ВНИМАНИЕ

- Уверете се, че веригите за сняг са с правилния размер и тип за вашите гуми. Неподходящи вериги за сняг могат да повредят шасито и окачването на автомобила, които може да не се покриват от гаранцията на производителя на автомобила ви. Също и куките за свързване на веригите за сняг могат да бъдат повредени от допирането до компоненти на автомобила, в резултат на което веригите за сняг да се разхлабят от гумата. Уверете се, че веригите за сняг са сертифицирани по стандарта SAE, клас „S".
- Винаги проверявайте дали правилно сте монтирали веригите след приблизително 0,5 до 1 км (0,3 до 0,6 мили) шофиране, за да се уверите, че монтажът е безопасен. Стегнете или монтирайте отново веригите, ако са хлабави.
- Дори и с правилната монтирана верига, не правете пълен завой (да завъртите волана изцяло на една страна) при шофиране на автомобила. (Ако правите пълен завой, шофирайте със скорост под 10 км/ч.)
- Ако автомобилът ви има гуми с размер 205/55R17, не използвайте вериги – те могат да повредят вашия автомобил (джанти, окачване и каросерия).

Поставяне на вериги

При поставяне на вериги следвайте инструкциите на производителя и ги монтирайте възможно най-плътно. Шофирайте бавно с поставените вериги. Ако чуете, че веригите се допират до каросерията или шасито, спрете и ги затегнете. Ако все още се допират, намалете скоростта, докато спрат. Махнете веригите веднага щом започнете да шофирате по изчистени пътища.

ПРЕДУПРЕЖДЕНИЕ

Монтиране на вериги

При монтиране на вериги за сняг паркирайте автомобила на нивото на земята, далеч от пътното движение. Включете аварийните светлини на автомобила и поставете предупредителен светлоотразителен триъгълник зад него, ако имате такъв. Винаги оставяйте автомобила на P (паркиране), използвайте ръчната спирачка и изключвайте двигателя, преди да поставите веригите за сняг.

⚠ ПРЕДУПРЕЖДЕНИЕ

Вериги за гуми

- Използването на вериги може да повлияе негативно на управляемостта на автомобила.
- Не превишавайте 30 км/ч (20 мили/час) или препоръча- ното от производителя на вери- ги ограничение на скоростта – което от двете е по-ниско.
- Шофирайте внимателно и из- бягвайте неравности, дупки, остри завои и други опасности на пътищата, които могат да до- ведат до отскачане на автомо- била.
- Избягвайте остри завои или бло- киране на колелата при спира- не.

✻ ВНИМАНИЕ

- Вериги, които са с неправилен размер или са неправилно по- ставени, могат да повредят спи- рачните маркучи, окачването, каросерията и джантите на ва- шия автомобил.
- Спрете да шофирате и стегнете наново веригите всеки път, ко- гато чуете, че се удрят в авто- мобила.

Vetrarakstur



Alvarlegri veðuraðstæður að vetri til leiða til meira slits og annarra vandamála. Til að lágmarka akstursvandamál að vetri til ættir þú að fylgja eftirfarandi uppástungum:

Aðstæður í snjó eða hálku

Til að geta ekið ökutækinu þínu í djúpum snjó kann að vera nauðsynlegt að nota snjóhjólbarða eða setja snjókeðjur á hjólin. Ef þörf er á snjóhjólbörðum er nauðsynlegt að velja hjólbarða sem eru jafngildir upprunalegu hjólbörðunum að stærð og tegund. Misbrestur á að gera svo hefur óhagstæð áhrif á öryggi og ak- sturseiginleika bílsins þíns. Ennfre- mur kunna hraðakstur, snögg hröðun, skyndileg beiting hemla og krappar beygjur hugsanlega að reynast mjög hættuleg iðja.

Meðan á hraðaminnkun stendur skal nota hreyfilhemilinn til hins ýtrasta. Skyndileg beiting hemla á snævi þöktum eða ísuðum vegum kann að valda því að bíllinn renni til. Þú þarft að halda hæfilegri fjarlægð frá ökutækjunum fyrir framan þitt ökutæki. Beittu einnig hemlunum varlega. Taka ætti fram að uppsetning snjókeðja á hjólbarðana veitir meiri akstur- skraft en kemur ekki í veg fyrir hliðarskrik.

✻ TILKYNNING

Snjókeðjur eru ekki löglegar í öllum löndum. Athugaðu landslög áður en snjókeðjur eru settar á.

Snjóhjólbarðar

Þegar snjóhjólbarðar eru settir á ökutæki skal gæta þess að þeir séu af sömu stærð og þeir upprunalegu og að nota hjólbarða sem mælt er með í þessari handbók. Það getur valdið óeðlilegum hávaða í akstri ef notaðir eru aðrir hjólbarðar en þeir sem mælt er með. Hámarksþyngd sem hjólbarðar þola er mismunandi eftir ökutækjum, svo gættu þess að nota rétta stærð af hjólbörðum.

Settu snjóhjólbarða á öll fjögur hjólin til að jafna út meðhöndlun ökutækisins við öll veðurskilyrði. Hafðu í huga að gripið sem snjóhjólbarðar veita á þurrum vegum kann að vera minna en hjólbarðanna sem ökutækið var upphaflega búið. Þú ættir að aka varlega, jafnvel þegar vegurinn er auður.

Athugaðu hjá hjólbarðasalanum varðandi ráðleggingar um hámarkshraða.

※ Ráðlagðir hjólbarðar

185/65 R15	205/55 R17
Kumho (WINTERCRAFT WP71)	
Continental (CONTI PREMIUM CONTACT5, WINTER CONTACT TS850P)	

⚠ VIÐVÖRUN

Stærð snjóhjólbarða

Snjóhjólbarðar ættu að vera af jafngildri stærð og tegund og venjulegir hjólbarðar ökutækisins. Að öðrum kosti kann það að hafa óhagstæð áhrif á akstureiginleika ökutækisins.

Settu ekki negldа hjólbarða undir án þess að athuga fyrst staðbundnar reglugerðir ríkis og bæja vegan mögulegra takmarkana á notkun þeirra.

Snjókeðjur



Þar sem hliðar þverbandahjólbarða eru þynnri kunna þeir að skemmast ef sumar tegundir af snjókeðjum eru festar við þá. Þar af leiðandi er mælt með notkun snjóhjólbarða í stað snjókeðja. Ekki skal setja keðjur á ökutæki sem búin eru álfelgum; snjókeðjur kunna að valda skemmdum á felgunum. Ef það verður að nota snjókeðjur skal nota vírkeðjur sem eru innan við 12 mm (0,47 tommu) að þykkt. Skemmdir á ökutækinu þínu af völdum rangrar notkunar snjókeðja falla ekki undir ábyrgð framleiðandans.

Settu snjókeðjur aðeins upp á hjólbörðunum að framan.

✻ TILKYNNING

- Gakktu úr skugga um að snjókeðjurnar séu af réttri stærð og tegund fyrir hjólbarðana þína. Rangar snjókeðjur geta valdið skemmdum á yfirbyggingu ökutækisins og fjöðrun og ekki er víst að þær falli undir ábyrgð framleiðanda ökutækisins. Einnig geta tengikrókar snjókeðjanna skemmst vegna snertingar við ökutækið sem veldur því að snjókeðjurnar losna frá hjólbarðanum. Gakktu úr skugga um að snjókeðjurnar séu af SAEflokki og "S"-vottaðar.
- Athugaðu alltaf uppsetningu og rétta festingu keðja eftir að hafa ekið um það bil 0,5 til 1 km (0,3 til 0,6 mílur) til að tryggja örugga festingu. Hertu keðjurnar eða settu þær upp aftur ef þær eru lausar.
- Jafnvel með viðeigandi keðju uppsetta skal ekki taka fulla beygju (snúa stýrinu til fulls til annarrar hliðar) þegar ökutækinu er ekið. (Ef þú ert að taka fulla beygju skaltu aka á hraða undir 10 km/klst.)
- Ef ökutækið er með hjólbarða af stærðinni 205/55R17 skaltu ekki nota snjókeðjur; þær geta skemmt ökutækið (hjól, fjöðrun og skrokk).

Uppsetning á keðjum

Þegar þú setur upp keðjur skaltu fylgja leiðbeiningum framleiðandans og festa þær eins þétt og þú getur. Aktu hægt með uppsettar keðjur. Ef þú heyrir keðjurnar snerta yfirbyggingu eða undirvagn skaltu stöðva og herða þær. Ef þær snerta enn skaltu hægja á þar til það hættir. Fjarlægðu keðjurnar um leið og þú byrjar að aka á hreinsuðum vegum.

⚠ VIÐVÖRUN

Keðjur festar á

Þegar þú festir snjókeðjur á skaltu leggja ökutækinu á jafnsléttu fjarri umferð. Kveiktu á blikkandi hættuljósum ökutækisins og settu neyðarviðvörunarþrihyrning fyrir aftan ökutækið, ef til staðar. Settu ökutækið alltaf í P (Leggja), settu stöðuhemilinn á og slökktu á hreyflinum áður en þú setur upp snjókeðjur.

⚠ VIÐVÖRUN

Snjókeðjur

- Notkun keðja kann að hafa óhagstæð áhrif á aksturseiginleika ökutækisins.
- Farðu ekki umfram 30 km/klst. (20 míl/klst) eða ráðlögð hraðatakmörk framleiðanda keðjanna, hvort sem er lægra.
- Aktu varlega og forðastu ójöfnur, holur, krappar beygjur og aðrar hættur á veginum sem kunna að valda því að ökutækið skoppi.
- Forðastu krappar beygjur og læsingu hjóla lvið hemlun.

✻ TILKYNNING

- Keðjur sem eru af rangri stærð eða rangt settar upp kunna að skemma hemlaleiðslur ökutækisins, fjöðrun, yfirbyggingu og hjól.
- Keðjur sem eru af rangri stærð eða rangt settar upp kunna að skemma hemlaleiðslur ökutækisins, fjöðrun, yfirbyggingu og hjól.

Abbreviation A

ABBREVIATION

ABS
Anti-lock Brake System

BCA
Blind-Spot Collision-Avoidance Assist

BCW
Blind-Spot Collision Warning

BVM
Blind-Spot View Monitor

CC
Cruise Control

CRS
Child Restraint System

DAW
Driver Attention Warning

DRL
Daytime Running Light

EBD
Electronic Brake force Distribution

ECM
Electric Chromic Mirror

EPS
Electronic Power Steering

ESC
Electronic Stability Control

ESS
Emergency Stop Signal

FCA
Forward Collision-Avoidance Assist

HAC
Hill-start Assist Control

HBA
High Beam Assist

HMSL
High Mounted Stop Lamp

HUD
Head-Up Display

LATCH
Lower Anchors and Tether for Children

LFA
Lane Following Assist

LKA
Lane Keeping Assist

MDPS
Motor Driven Power Steering

MIL
Malfunction Indicator Lamp

MSLA
Manual Speed Limit Assist

ODS
Occupant Detection System

PCA-R
Reverse Parking Collision-Avoidance Assist

PDW
Reverse Parking Distance Warning

RCCA
Rear Cross-Traffic Collision-Avoidance Assist

RCCW
Rear Cross-Traffic Collision Warning

RVM
Rear View Monitor

SCC
Smart Cruise Control

SRS
Supplemental Restraint System

SRSCM
SRS Control Module

SVM
Surround View Monitor

TBT
Turn By Turn

TCS
Traction Control System

TIN
Tire Identification Number

TPMS
Tire Pressure Monitoring System

VIN
Vehicle Identification Number

VSM
Vehicle Stability Management

Index I

Index

A

air bag 3-41
air bag collision sensors 3-57
air bag warning label 3-44, 3-63
air bag warning light 3-44
curtain air bag 3-55
driver's and passenger's front air bag 3-48
side air bag 3-54
SRS components and functions 3-46
air cleaner 7-43
filter replacement 7-43
air conditioner compressor label 8-15
air conditioning system 8-7
antenna 4-160
appearance care 7-113
exterior care 7-113
interior care 7-118
ashtray 4-151
auto start ISG 5-20
excluding mild hybrid electric vehicle 5-20
auto stop ISG 5-18
excluding mild hybrid electric vehicle 5-18
mild hybrid electric vehicle 5-19
auto up/down window 4-29
automatic climate control system 4-131
activate upon washer fluid use 4-139
air intake control 4-135
automatic heating and air conditioning 4-131
defrost mode 4-134
fan speed control 4-136
manual heating and air conditioning 4-132
mode selection 4-133
OFF mode 4-136
outside (fresh) air 4-135
recirculated air 4-135
sunroof inside air recirculation 4-142
temperature control 4-134
automatic transmission (AT) 5-34
automatic transmission operation 5-34
good driving practices 5-40
parking in N (neutral) gear 5-36
shift lock system 5-39
sports mode 5-37
transmission ranges 5-35
using the shift lever 5-38

B

battery 7-49
battery capacity label 7-51
battery recharging 7-51
for best battery service 7-49
reset items 7-52
Before 5-7
before driving 5-7
before entering vehicle 5-7
before starting 5-7
Before entering vehicle 5-7
blind-spot collision warning (BCW) 5-88
detecting sensor 5-89
function malfunction and limitations 5-93
function operation 5-92
function settings 5-90
limitations of the function 5-94
blind-spot collision-avoidance assist (BCA) 5-98
detecting sensor 5-99
function malfunction and limitations 5-104
function operation 5-101
function settings 5-100
blind-spot safety 5-90, 5-100
brake system 5-51
anti-lock brake system (ABS) 5-55

electronic stability control (ESC) 5-57
ESC indicator light 5-59
ESC operation 5-58
hill-start assist control (HAC) 5-60
parking brake 5-53
power brakes 5-51
vehicle stability management (VSM) 5-61
VSM operation 5-61
brake/clutch fluid 7-39
checking the brake/clutch fluid level 7-39
bulb wattage 8-4

C

center console storage 4-147
central door lock/unlock switch 4-22
child restraint system (CRS) 3-28
Installing a Child Restraint System (CRS) 3-30
installing a child restraint system with a lap/shoulder belt 3-37
ISOFIX anchorage 3-31
top-tether anchorage 3-31
child-protector rear door lock 4-23
cigarette lighter 4-150
climate control air filter 7-44
filter inspection 7-44
coat hook 4-157
covering shelf trim 4-156
cruise control (CC) 5-124
function operation 5-124
to resume the function 5-126
to turn off the function 5-127
cup holder 4-151
curtain air bag 3-55

D

declaration of conformity 5-164, 8-16
defroster 4-118
outside rearview mirror defroster 4-119
rear window defroster 4-118
dimensions 8-3
distance to empty 4-55
door locks 4-19
central door lock/unlock switch 4-22
child-protector rear door lock 4-23
from inside 4-21
from outside 4-19
impact sensing door unlock system 4-23
in case of an emergency 4-20
rear occupant alert (ROA) system 4-24
speed sensing door lock system 4-23
drive mode integrated control 5-64
drive mode 5-64
drive mode integrated control system
ECO mode 5-65
SPORT mode 5-66
driver attention warning (DAW) 5-117
basic function 5-117
detecting sensor 5-117
function malfunction and limitations 5-121
function operation 5-119
function settings 5-117
leading vehicle departure warning function 5-117
dual clutch transmission (DCT) 5-42
DCT warning messages 5-44
dual clutch transmission operation 5-42
good driving practices 5-50
LCD display for warning message 5-44

parking in N (neutral) gear 5-47
shift-lock override 5-49
sports mode 5-48
transmission overheated 5-45

E

economical operation 5-169
emergency commodity 6-36
fire extinguisher 6-36
first aid kit 6-36
tire pressure gauge 6-37
triangle reflector 6-37
emergency starting 6-6
jump starting 6-6
push-starting 6-8
emission control system 7-121
crankcase emission control system 7-121
evaporative emission control system 7-121
exhaust emission control system 7-122
energy flow (for 48V HEV) 4-66
engine 8-2
engine compartment 2-9, 7-5
engine coolant 7-36
changing the coolant 7-38
checking the coolant level 7-36
engine coolant temperature gauge 4-53
engine number 8-14
engine oil (gasoline) 7-32
changing the engine oil and filter 7-34
Checking the engine oil level 7-32
ENGINE START/STOP button 5-12
ENGINE START/STOP button position 5-12
illuminated ENGINE START/STOP button 5-12
starting the engine 5-15
start/run 5-14
stopping the engine 5-17
explanation of scheduled maintenance items 7-28
exterior features 4-158
roof rack 4-158
side seal molding 4-159
exterior overview 2-2

F

forward collision-avoidance assist (FCA) 5-66
brake operation 5-70
collision warning 5-69
detecting sensor 5-66
emergency braking 5-70
forward safety 5-67
function malfunction 5-72
function settings 5-67
limitations of FCA 5-74
warning message and warning light 5-72
warning timing 5-68
forward/reverse parking distance warning (PDW) 4-98
non-operational conditions 4-102
operation 4-99
PDW ON button 4-99
front headrest 3-7
front seat adjustment 3-6
seat cushion height 3-7
seatback angle 3-7
fuel filler door 4-35
closing 4-35
opening 4-35
fuel gauge 4-54
fuel label 8-16
fuses 7-64
engine compartment fuse replacement 7-68
fuse/relay panel description 7-69
inner panel fuse replacement 7-66

G

gauges 4-52
glove box 4-147
glove box lamp 4-118

H

headrest (front)
adjusting the height up and down 3-8
forward and backward adjustment 3-9
removal and installation 3-9
heated steering wheel 4-44
high beam assist (HBA) 4-107
hood 4-33
closing 4-34
hood open warning 4-34
opening 4-33

I

idle stop and go (ISG) 5-17
activating the ISG 5-17
auto start 5-20
auto stop 5-18
condition of ISG system operation 5-21
deactivating the ISG 5-18
ISG indication 5-23
to restart the engine from idle stop mode 5-21
if the engine overheats 6-8
if the engine will not start 6-5
if engine doesn't turn over or turns over slowly 6-5
if engine turns over normally but does not start 6-5
if you have a flat tire (with spare tire) 6-14
changing tires 6-16
EC declaration of conformity for jack 6-24
jack and tools 6-14
jack label 6-22
removing and storing the spare tire 6-15
if you have a flat tire (with tire mobility kit) 6-25
checking the tire inflation pressure 6-30
components of the tire mobility kit (TMK) 6-27
distributing the sealant 6-29
introduction 6-26
notes on the safe use of the tire mobility kit 6-30
technical data 6-31
using the tire mobility kit 6-28
in case of an emergency while driving 6-4
if engine stalls while driving 6-4
if the engine stalls at a crossroad or crossing 6-4
if you have a flat tire while driving 6-4
increase cargo space 4-149
infotainment system 4-160
antenna 4-160
how vehicle audio works 4-161
USB port 4-161
instrument cluster 4-50
adjusting Instrument cluster Illumination 4-51
distance to empty 4-55
engine coolant temperature gauge 4-53
fuel gauge 4-54
gauges 4-52
LCD display control 4-51
odometer 4-54
outside temperature gauge 4-56
speedometer 4-52
tachometer 4-53
transmission shift indicator 4-57
instrument panel overview 2-7
intelligent manual transmission (IMT) 5-29

downshifting 5-32
good driving practices 5-33
intelligent manual transmission (IMT) operation 5-30
using the clutch 5-32
intelligent manual transmission (iMT) system actuator fluid 7-40
checking the intelligent manual transmission (iMT) system actuator fluid level 7-40
intelligent speed limit warning (ISLW) 5-112
end of a speed limit 5-115
function setting and activation 5-113
no passing information 5-114
no reliable speed limit information 5-114
unlimited speed 5-114
interior features 4-150
ashtray 4-151
cigarette lighter 4-150
coat hook 4-157
covering shelf trim 4-156
cup holder 4-151
floor mat anchor(s) 4-155
power outlet 4-154
seat warmer 4-152
shopping bag holder 4-157
sun visor 4-152
USB charger 4-155
interior light 4-116
glove box lamp 4-118
luggage room lamp 4-117
map lamp 4-116
room lamp 4-117
vanity mirror lamp 4-117
interior overview 2-5
ISG indication 5-23

K

key positions 5-9
ignition switch 5-9
starting the engine 5-10
stopping the engine 5-11
keys 4-7
folding key 4-7
immobilizer system 4-8
smart key 4-7

L

lane following assist (LFA) 5-144
detecting sensor 5-144
function settings 5-144
hands-off warning 5-145
lane following assist 5-145
turning the function ON/OFF 5-144
lane keeping assist (LKA) 5-81
detecting sensor 5-81
function malfunction 5-86
hands-off warning 5-85
limitations of the function 5-86
LKA activation 5-84
LKA function 5-83
to activate/deactivate LKA 5-83
LCD display control 4-51
LCD display (for type B cluster) 4-68
digital speedometer 4-70
driving assist mode 4-69
information 4-70
LCD display modes 4-68
master warning mode 4-70
trip computer mode 4-69
user settings mode 4-71
warning messages (for type B cluster) 4-77
light bulbs 7-85
bulb replacement precaution 7-85
lighting 4-104
battery saver function 4-104
daytime running light 4-105
front fog light 4-110
headlight escort function 4-104
headlight leveling device 4-111
high beam assist (HBA) 4-107
high beam operation 4-107

lighting control 4-105
one-touch lane change function 4-110
rear fog light 4-110
static bending light 4-105
turn signals and lane change signals 4-109
luggage board 4-149
luggage net holder 4-148
luggage room lamp 4-117

M

maintenance services 7-7
owner maintenance precautions 7-7
owner's responsibility 7-7
manual climate control system 4-120
activate upon washer fluid use 4-127
air intake control 4-123
fan speed control 4-124
mode selection 4-122
outside (fresh) air 4-123
recirculated air 4-123
sunroof inside air recirculation 4-130
temperature control 4-123
manual speed limit assist (MSLA) 5-109
function operation 5-110
to set speed limit 5-110
to turn off the speed limit control 5-111
manual transmission (MT) 5-25
good driving practices 5-28
manual transmission operation 5-25
using the clutch 5-27
mirrors - inside rearview mirror 4-45
day/night rearview mirror 4-46
electrochromic mirror (ECM) 4-46
mirrors - outside rearview mirror 4-47
folding 4-48
remote control 4-48

O

odometer 4-54
outside temperature gauge 4-56
owner maintenance 7-9
owner maintenance schedule 7-9

P

parking brake 5-53, 7-43
checking the parking brake 7-43
power window lock button 4-31

R

rear cross-traffic collision warning (RCCW) 5-147
detecting sensor 5-148
function operation 5-149
function settings 5-148
system malfunction and limitations 5-150
rear cross-traffic collision-avoidance assist (RCCA) 5-154
detecting sensor 5-155
emergency braking 5-157
function malfunction and limitations 5-160
function settings 5-155
function warning and control 5-156
stopping vehicle and ending brake control 5-158
rear headrest 3-10
rear occupant alert (ROA) system 4-24
rear view monitor (RVM) 4-94
recommended lubricants and capacities 8-8
recommended SAE viscosity number 8-10
refrigerant label 4-129, 4-141, 8-

15
remote keyless entry 4-10
battery replacement 4-12
precautions 4-11
system operations 4-10
reverse parking distance warning (PDW) 4-95
road warning 6-3
hazard warning flasher 6-3
room lamp 4-117

S

scheduled maintenance service 7-11
maintenance under severe usage conditions for gasoline engine (except europe (including russia)) 7-25
maintenance under severe usage conditions for gasoline engine (for europe (except russia)) 7-17
normal maintenance schedule for gasoline engine (except europe (including russia)) 7-20
normal maintenance schedule for gasoline engine (for europe (except russia)) 7-12
scheduled maintenance service precaution 7-11
seat belt warning 3-16
driver's seat belt warning 3-16
front passenger's seat belt warning 3-17
rear passenger's seat belt warning 3-18
seat belts 3-15
lap/shoulder belt 3-18
pre-tensioner seat belt 3-21
seat belt warning 3-16
seat warmer 4-152
seats 3-3
front headrest adjustment 3-7
front seat adjustment 3-6
rear headrest adjustment 3-10
rear seat adjustment 3-10
seatback pocket 3-10
shopping bag holder 4-157
side air bag 3-54
smart cruise control (SCC) 5-128
collision warning 5-137
cruise indicator 5-128
function display and control 5-134
function malfunction and limitations 5-139
function operating 5-133
function settings 5-129
limitations of the function 5-140
SCC reaction 5-133
to resume the function 5-132
to temporarily accelerate 5-135
to temporarily cancel the function 5-132
smart key 4-14
functions 4-14
precautions 4-15
special driving conditions 5-171
driving at night 5-173
driving in flooded areas 5-174
driving in the rain 5-173
driving off-road 5-174
hazardous driving conditions 5-171
highway driving 5-174
rocking the vehicle 5-172
smooth cornering 5-173
speedometer 4-52
steering wheel 4-42
electric power steering 4-42
heated steering wheel 4-44
horn 4-44
tilt & telescopic steering 4-43
storage compartments 4-147
center console storage 4-147
glove box 4-147
increase cargo space 4-149
luggage board 4-149
luggage net holder 4-148
sunglass holder 4-148

sun visor 4–152
sunglass holder 4–148
sunroof 4–38
resetting the sunroof 4–41
sliding the sunroof 4–39
sunshade 4–41
tilting the sunroof 4–40

T

tachometer 4–53
tailgate 4–25
closing 4–25
emergency tailgate safety release 4–26
opening 4–25
theft-alarm system 4–16
tire pressure monitoring system (TPMS) 6–10
indication of low tire pressure 6–11
indicator light status 6–14
system overview 6–10
tire pressure monitoring system malfunction 6–13
TPMS setting 6–10
tire specification and pressure label 8–13
tires and wheels 7–53, 8–5
checking tire inflation pressure 7–54
low aspect ratio tire 7–63
recommended cold tire inflation pressures 7–53
tire care 7–53
tire maintenance 7–59
tire replacement 7–57
tire rotation 7–55
tire sidewall labeling 7–59
tire traction 7–59
wheel alignment and tire balance 7–56
wheel replacement 7–58
towing 6–32
emergency towing 6–33
removable towing hook 6–33
towing service 6–32
trailer towing (for europe) 5–181
driving with a trailer 5–184
parking on hills 5–187
trailer brakes 5–183
trip computer 4–60
trip information (trip computer) (for type A cluster) 4–60
trip information (trip computer) (for type B cluster) 4–64

U

USB charger 4–155
USB port 4–161
user settings mode 4–71

V

vanity mirror lamp 4–117
vehicle certification label 8–13
vehicle identification number (VIN) 8–12
vehicle weight 5–192

W

warning and indicator lights 4–82
indicator lights 4–90
warning lights 4–82
warning messages (for type B cluster) 4–77
washer fluid 7–42
checking the washer fluid level 7–42
weight/volume 8–7
what to do in an emergency 6–3
windows 4–28
auto up/down window 4–29
manual windows 4–32
opening and closing 4–29
power window lock button 4–31
power windows 4–29

windshield defrosting and defogging 4–142
auto defogging system 4–145
automatic climate control system 4–143
manual climate control system 4–143
winter driving 5–176
snow tires 5–176
tire chains 5–177
wiper blades 7–46
blade inspection 7–46
blade replacement 7–46
wipers and washers 4–112
AUTO (automatic) control 4–113
rear window wiper and washer switch 4–115
windshield washers (front) 4–114

Y

your vehicle at a glance 2–2