YN ENG FOREWORD.qxp 4/16/2012 9:55 AM Page 1

KIA, THE COMPANY

Thank you for becoming the owner of a new Kia vehicle.

As a global car manufacturer focused on building high-quality, value for reasonable prices, Kia Motors is dedicated to providing you with a customer service experience that exceeds your expectations.

At all of our Kia dealerships you will be treated with warmth, hospitality and professionalism by people who care based on our **"Family-like Care"** promise.

All information contained in this Owner's Manual is accurate at the time of publication. However, Kia reserves the right to make changes at any time so that our policy of continual product improvement can be carried out.

This manual applies to all Kia models and includes descriptions and explanations of optional as well as standard equipment. As a result, you may encounter material in this manual that is not applicable to your specific Kia vehicle.

Enjoy your vehicle and Kia's "Family-like Care" experience!

YN ENG FOREWORD.qxp 4/16/2012 9:55 AM Page 2

FOREWORD

Thank you for choosing a Kia vehicle.

This manual will familiarize you with operational, maintenance and safety information about your new vehicle. It is supplemented by a Warranty and Maintenance book that provides important information on all warranties regarding your vehicle. Kia urges you to read these publications carefully and follow the recommendations to help assure enjoyable and safe operation of your new vehicle.

Kia offers a great variety of options, components and features for its various models. Therefore, some of the equipment described in this manual, along with the various illustrations, may not be applicable to your particular vehicle.

The information and specifications provided in this manual were accurate at the time of printing. Kia reserves the right to discontinue or change specifications or design at any time without notice and without incurring any obligation. If you have questions, we recommend to contact your authorized Kia dealer.

Kia assures you of our continuing interest in your motoring pleasure and satisfaction in your Kia vehicle.

© 2012 Kia Motors Slovakia s.r.o.

All rights reserved. Reproduction by any means, electronic or mechanical, including photocopying, recording, or by any information storage and retrieval system or translation in whole or part is not permitted without written authorization from Kia Motors Slovakia s.r.o..

YN ENG FOREWORD.qxp 4/16/2012 9:55 AM Page 3

TABLE OF CONTENTS

Introduction	1
Your vehicle at a glance	2
Safety features of your vehicle	3
Features of your vehicle	4
Driving your vehicle	5
What to do in an emergency	6
Maintenance	7
Specifications & Consumer information	8
Index	I

YN ENG 1.QXP 4/16/2012 9:56 AM Page 1

Introduction

1

How to use this manual / 1-2
Fuel requirements / 1-3
Vehicle break-in process / 1-5
Indicator symbols on the instrument cluster / 1-6

YN ENG 1.QXP 4/16/2012 9:56 AM Page 2

HOW TO USE THIS MANUAL

We want to help you get the greatest possible driving pleasure from your vehicle. Your Owner's Manual can assist you in many ways. We strongly recommend that you read the entire manual. In order to minimize the chance of death or injury, you must read the WARNING and CAUTION sections in the manual.

Illustrations complement the words in this manual to best explain how to enjoy your vehicle. By reading your manual, you learn about features, important safety information, and driving tips under various road conditions.

The general layout of the manual is provided in the Table of Contents. A good place to start is the index; it has an alphabetical listing of all information in your manual.

Sections: This manual has eight sections plus an index. Each section begins with a brief list of contents so you can tell at a glance if that section has the information you want.

You will find various WARNINGs, CAUTIONs, and NOTICEs in this manual. These WARNINGs were prepared to enhance your personal safety. You should carefully read and follow ALL procedures and recommendations provided in these WARNINGs, CAUTIONs and NOTICEs.

⚠ WARNING

A WARNING indicates a situation in which harm, serious bodily injury or death could result if the warning is ignored.

⚠ CAUTION

A CAUTION indicates a situation in which damage to your vehicle could result if the caution is ignored.

✻ NOTICE

A NOTICE indicates interesting or helpful information is being provided.

YN ENG 1.QXP 4/16/2012 9:56 AM Page 3

FUEL REQUIREMENTS

Gasoline engine

Unleaded

For Europe

For the optimal vehicle performance, we recommend you to use unleaded gasoline with an octane rating of RON (Research Octane Number) 95 / AKI (Anti Knock Index) 91 or higher.

You may use unleaded gasoline with an octane rating of RON 91~94 / AKI 87~90 but it may result in slight performance reduction of the vehicle.

Except Europe

Your new Kia vehicle is designed to use only unleaded fuel having an Octane Rating of RON (Research Octane Number) 91 / AKI (Anti-Knock Index) 87 or higher.

Your new vehicle is designed to obtain maximum performance with UNLEADED FUEL, as well as minimize exhaust emissions and spark plug fouling.

⚠ CAUTION

NEVER USE LEADED FUEL. The use of leaded fuel is detrimental to the catalytic converter and will damage the engine control system's oxygen sensor and affect emission control.

Never add any fuel system cleaning agents to the fuel tank other than what has been specified. (We recommend that you consult an authorized Kia.)

⚠ WARNING

- **Do not "top off" after the nozzle automatically shuts off when refueling.**
- **Always check that the fuel cap is installed securely to prevent fuel spillage in the event of an accident.**

Leaded (if equipped)

For some countries, your vehicle is designed to use leaded gasoline. When you are going to use leaded gasoline, we recommend that you ask to an authorized Kia dealer.

Octane Rating of leaded gasoline is same with unleaded one.

Gasoline containing alcohol and methanol

Gasohol, a mixture of gasoline and ethanol (also known as grain alcohol), and gasoline or gasohol containing methanol (also known as wood alcohol) are being marketed along with or instead of leaded or unleaded gasoline.

Do not use gasohol containing more than 10% ethanol, and do not use gasoline or gasohol containing any methanol. Either of these fuels may cause drivability problems and damage to the fuel system.

Discontinue using gasohol of any kind if drivability problems occur.

Vehicle damage or drivability problems may not be covered by the manufacturer's warranty if they result from the use of:

YN ENG 1.QXP 4/16/2012 9:56 AM Page 4

1. Gasohol containing more than 10% ethanol.
2. Gasoline or gasohol containing methanol.
3. Leaded fuel or leaded gasohol.

⚠ CAUTION

Never use gasohol which contains methanol. Discontinue use of any gasohol product which impairs drivability.

Use of MTBE

Kia recommends avoiding fuels containing MTBE (Methyl Tertiary Butyl Ether) over 15.0% vol. (Oxygen Content 2.7% weight) in your vehicle.

Fuel containing MTBE over 15.0% vol. (Oxygen Content 2.7% weight) may reduce vehicle performance and produce vapor lock or hard starting.

Do not use methanol

Fuels containing methanol (wood alcohol) should not be used in your vehicle. This type of fuel can reduce vehicle performance and damage components of the fuel system.

⚠ CAUTION

Your New Vehicle Limited Warranty may not cover damage to the fuel system and any performance problems that are caused by the use of fuels containing methanol or fuels containing MTBE (Methyl Tertiary Butyl Ether) over 15.0% vol. (Oxygen Content 2.7% weight.)

Fuel Additives

Kia recommends that you use good quality gasolines meet Europe Fuel standards (EN228) or equivalents.

For customers who do not use good quality gasolines including fuel additives regularly, and have problems starting or the engine does not run smoothly, one bottle of additives added to the fuel tank at every 15,000km (For Europe)/ 5,000km (Except Europe). Additives are available from your authorized Kia dealer along with information on how to use them. Do not mix other additives.

Operation in foreign countries

If you are going to drive your vehicle in another country, be sure to:

- Observe all regulations regarding registration and insurance.
- Determine that acceptable fuel is available.

Diesel engine

Diesel fuel

Diesel engine must be operated only on commercially available diesel fuel that complies with EN 590 or comparable standard. (EN stands for "European Norm"). Do not use marine diesel fuel, heating oils, or non-approved fuel additives, as this will increase wear and cause damage to the engine and fuel system. The use of non-approved fuels and / or fuel additives will result in a limitation of your warranty rights.

Diesel fuel of above cetane 51 is used in your vehicle. If two types of diesel fuel are available, use summer or winter fuel properly according to the following temperature conditions.

- Above -5°C(23°F) ... Summer type diesel fuel.
- Below -5°C(23°F) ... Winter type diesel fuel.

Watch the fuel level in the tank very carefully : If the engine stops through fuel failure, the circuits must be completely purged to permit restarting.

YN ENG 1.QXP 4/16/2012 9:56 AM Page 5

⚠ CAUTION

Do not let any gasoline or water enter the tank. This would make it necessary to drain it out and to bleed the lines to avoid jamming the injection pump and damaging the engine.

⚠ CAUTION - Diesel Fuel (if equipped with DPF)

It is recommended to use the regulated automotive diesel fuel for diesel vehicle equipped with the DPF system.

If you use diesel fuel including high sulfur (more than 50 ppm sulfur) and unspecified additives, it can cause the DPF system to be damaged and white smoke can be emitted.

Biodiesel

Commercially supplied Diesel blends of no more than 7% biodiesel, commonly known as "B7 Diesel" may be used in your vehicle if Biodiesel meets EN 14214 or equivalent specifications. (EN stands for "European Norm"). The use of biofuels exceeding 7% made from rapeseed methyl ester (RME), fatty acid methyl ester (FAME), vegetable oil methyl ester (VME) etc. or mixing diesel exceeding 7% with biodiesel will cause increased wear or damage to the engine and fuel system. Repair or replacement of worn or damaged components due to the use of non approved fuels will not be covered by the manufactures warranty.

⚠ CAUTION

- ***Never use any fuel, whether diesel, B7 biodiesel or otherwise, that fails to meet the latest petroleum industry specification.***
- ***Never use any fuel additives or treatments that are not recommended or approved by the vehicle manufacturer.***

VEHICLE BREAK-IN PROCESS

No special break-in period is needed. By following a few simple precautions for the first 1,000 km (600 miles) you may add to the performance, economy and life of your vehicle.

- Do not race the engine.
- While driving, keep your engine speed (rpm, or revolutions per minute) within 3000 rpm.
- Do not maintain a single speed for long periods of time, either fast or slow. Varying engine speed is needed to properly break-in the engine.
- Avoid hard stops, except in emergencies, to allow the brakes to seat properly.
- Don't let the engine idle longer than 3 minutes at one time.
- Don't tow a trailer during the first 2,000 km (1,200 miles) of operation.

YN ENG 1.QXP 4/16/2012 9:56 AM Page 6

INDICATOR SYMBOLS ON THE INSTRUMENT CLUSTER


Door ajar warning light*


Seat belt warning light


High beam indicator


Light on indicator


Turn signal indicator


Front fog light indicator*


Rear fog light indicator*


ESP indicator*



ESP OFF indicator*



ABS warning light*



Parking brake & Brake fluid warning light


Engine oil pressure warning light



Electric power steering (EPS) system warning light*


Charging system warning light


Malfunction indicator*


Air bag warning light*


Immobilizer indicator*


Tailgate open warning light*


Door open position indicator*


Automatic transaxle shift pattern indicator*


Manual transaxle shift pattern indicator*


Low fuel level warning light


Glow indicator (Diesel only)


Fuel filter warning light (Diesel only)


Cruise indicator*



Cruise SET indicator*


Speed limit indicator*



AUTO STOP for ISG system indicator*



KEY OUT indicator*


Engine coolant temperature warning light


Low tire pressure telltale* / TPMS malfunction indicator*


Low tire pressure position telltale*

* if equipped

❉ For more detailed explanations, refer to “Instrument cluster” in section 4.

YN eng 2.QXP 19.9.2011 19:21 Page 1

Your vehicle at a glance

2

Interior overview / 2-2
Instrument panel overview / 2-3
Engine compartment / 2-4

YN eng 2.QXP 19.9.2011 19:21 Page 2

INTERIOR OVERVIEW

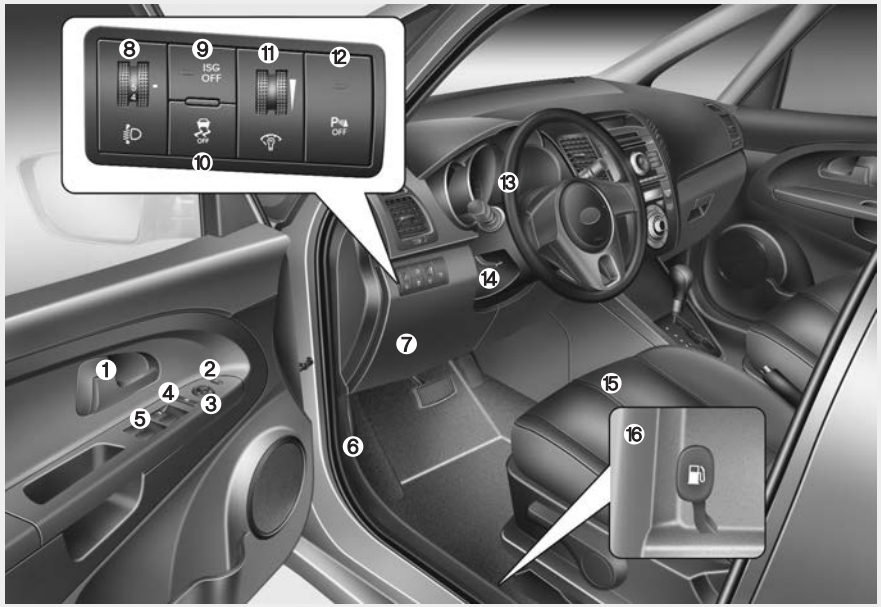

1. Inside door handle 4-14
2. Outside rearview mirror folding button*.....4-39
3. Outside rearview mirror control switch 4-38
4. Power window lock button* 4-22
5. Power window switches*.....4-20
6. Hood release lever.....4-24
7. Fuse box 7-52
8. Head lamp leveling device*.....4-66
9. ISG OFF button* 5-14
10. ESP OFF button* 5-29
11. Instrument panel illumination*.....4-42
12. Parking assist OFF button*.....4-57
13. Steering wheel 4-33
14. Steering wheel tilt lever.....4-33
15. Seat.....3-2
16. Fuel filler lid release lever 4-26

* if equipped

OYN029001-1

YN eng 2.QXP 19.9.2011 19:21 Page 3

INSTRUMENT PANEL OVERVIEW



1. Driver's front air bag* 3-44
2. Light control / Turn signals 4-61
3. Instrument cluster.....4-40
4. Wiper/Washer.....4-67
5. Steering wheel audio controls* 4-125
6. Auto cruise controls* / Speed limiter* 5-35/5-39
7. LCD display* / Trip computer* ..4-93/4-44
8. Audio controls*.....4-100
9. Hazard warning flasher switch....4-61/6-2
10. Central door lock/unlock button.....4-14
11. Seat warmer* 3-8
12. Climate control system*.....4-72
13. Passenger's front air bag*.....3-44
14. Glove box 4-91
15. Power outlet* / Cigarette lighter* 4-96/4-93
16. Shift lever*.....5-19
17. Parking brake 5-25
18. Brake pedal 5-24
19. Accelerator pedal 5-6
20. Vent controls.....4-75

* if equipped

* The actual instrument panel in the vehicle may differ from the illustration.

OYN029002

YN eng 2.QXP 19.9.2011 19:21 Page 4

ENGINE COMPARTMENT

■ **Gasoline Engine**

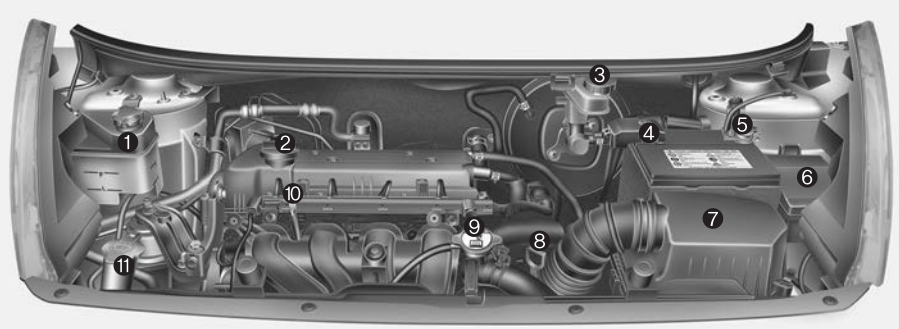

■ **Diesel Engine**

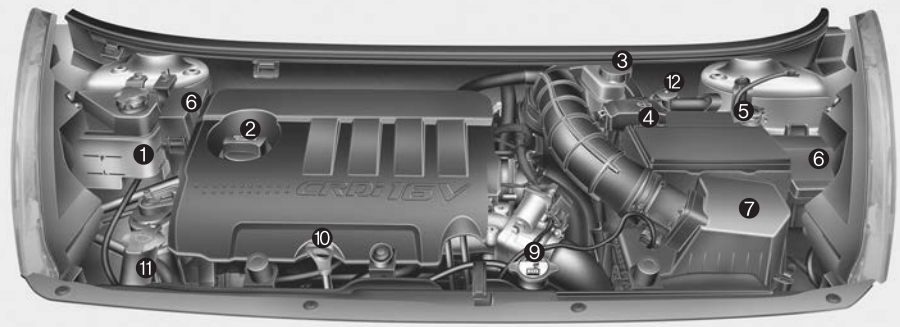

1. Engine coolant reservoir 7-25
2. Engine oil filler cap 7-24
3. Brake fluid reservoir 7-28
4. Positive battery terminal 7-39
5. Negative battery terminal.....7-39
6. Fuse box 7-52
7. Air cleaner.....7-33
8. Auto transaxle oil dipstick*.....7-29
9. Radiator cap 7-27
10. Engine oil dipstick.....7-24
11. Windshield washer fluid reservoir...7-31
12. Fuel filter 7-32

* if equipped

❈ The actual engine room in the vehicle may differ from the illustration.

OYN022003/OYN072002-1

YN ENG 3.QXP 4/16/2012 9:57 AM Page 1

Seats / 3-2
Seat belts / 3-14
Child restraint system / 3-26
Air bag - supplemental restraint system / 3-37

Safety features of your vehicle 3

YN ENG 3.QXP 4/16/2012 9:57 AM Page 2

SEATS

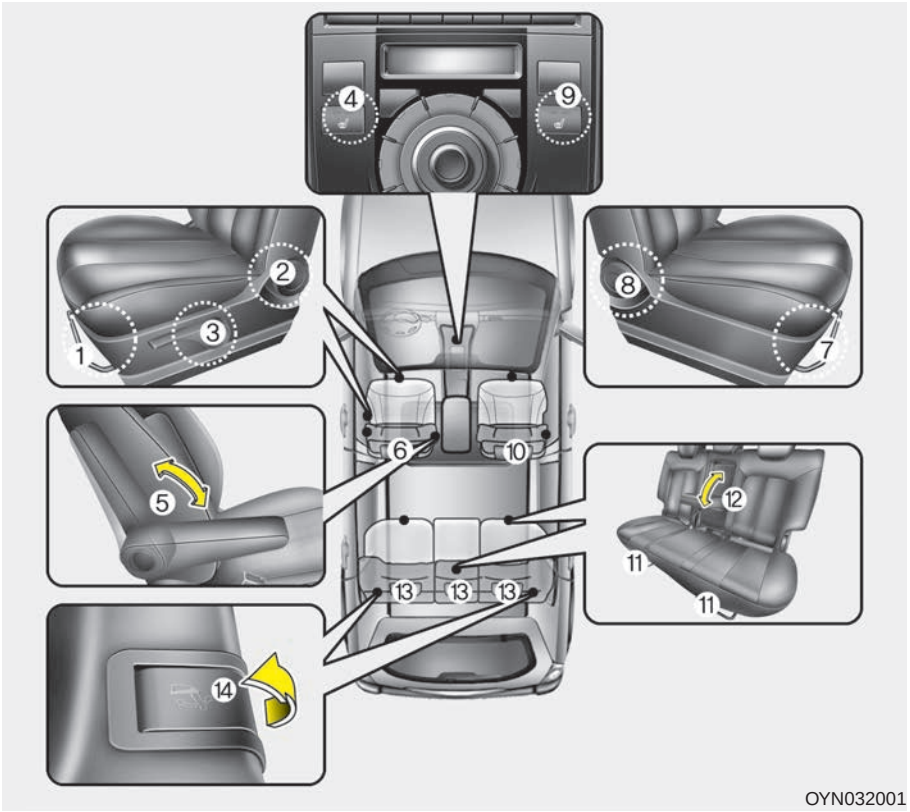

OYN032001

Driver's seat

(1) Seat adjustment, forward / backward
(2) Seatback recliner
(3) Seat adjustment, height*
(4) Seat warmer*
(5) Armrest*
(6) Headrest adjustment

Front passenger seat

(7) Seat adjustment, forward / backward
(8) Seatback recliner
(9) Seat warmer*
(10) Headrest adjustment

Rear seat

(11) Seat adjustment, forward / backward
(12) Armrest*
(13) Headrest adjustment
(14) Split folding rear seat

* if equipped

YN ENG 3.QXP 4/16/2012 9:57 AM Page 3

⚠ WARNING - Loose objects

Loose objects in the driver's foot area could interfere with the operation of the foot pedals, possibly causing an accident. Do not place anything under the front seats.

⚠ WARNING - Uprighting seat

When you return the seatback to its upright position, hold the seatback and return it slowly and be sure there are no other occupants around the seat. If the seatback is returned without being held and controlled, the back of the seat could move forward or backward resulting in accidental injury to a person struck by the seatback.

⚠ WARNING - Driver responsibility for passengers

Riding in a vehicle with seatback reclined could lead to serious or fatal injury in an accident. If a seat is reclined during an accident, the occupant's hips may slide under the lap portion of the seat belt applying great force to the unprotected abdomen. Serious or fatal internal injuries could result. The driver must advise the passenger to keep the seatback in an upright position whenever the vehicle is in motion.

⚠ WARNING

Do not use a sitting cushion that reduces friction between the seat and passenger. The passenger's hips may slide under the lap portion of the seat belt during an accident or a sudden stop. Serious or fatal internal injuries could result because the seat belt can't operate normally.

⚠ WARNING - Driver's seat

- **Never attempt to adjust seat while the vehicle is moving. This could result in loss of control, and an accident causing death, serious injury, or property damage.**
- **Do not allow anything to interfere with the normal position of the seatback. Storing items against a seatback or in any other way interfering with proper locking of a seatback could result in serious or fatal injury in a sudden stop or collision.**
- **Always drive and ride with your seatback upright and the lap portion of the seat belt snug and low across the hips. This is the best position to protect you in case of an accident.**
- **In order to avoid unnecessary and perhaps severe air bag injuries, always sit as far back as possible from the steering wheel while maintaining comfortable control of the vehicle. We recommend that your chest be at least 250 mm (10 inches) away from the steering wheel.**

YN ENG 3.QXP 4/16/2012 9:57 AM Page 4

⚠ WARNING - Rear seatbacks

- **The rear seatback must be securely latched. If not, passengers and objects could be thrown forward resulting in serious injury or death in the event of a sudden stop or collision.**
- **Luggage and other cargo should be laid flat in the cargo area. If objects are large, heavy, or must be piled, they must be secured. Under no circumstances should cargo be piled higher than the seatbacks. Failure to follow these warnings could result in serious injury or death in the event of a sudden stop, collision or rollover.**
- **No passenger should ride in the cargo area or sit or lie on folded seatbacks while the vehicle is moving. All passengers must be properly seated in seats and restrained properly while riding.**
- **When resetting the seatback to the upright position, make sure it is securely latched by pushing it forward and backwards.**

(Continued)

(Continued)

- **To avoid the possibility of burns, do not remove the carpet in the cargo area. Emission control devices beneath this floor generate high temperatures.**

⚠ WARNING

After adjusting the seat, always check that it is securely locked into place by attempting to move the seat forward or backward without using the lock release lever. Sudden or unexpected movement of the driver's seat could cause you to lose control of the vehicle resulting in an accident.

⚠ WARNING

- **Do not adjust the seat while wearing seat belts. Moving the seat cushion forward may cause strong pressure on the abdomen.**
- **Use extreme caution so that hands or other objects are not caught in the seat mechanisms while the seat is moving.**
- **Do not put a cigarette lighter on the floor or seat. When you operate the seat, gas may gush out of the lighter and cause fire.**

YN ENG 3.QXP 4/16/2012 9:57 AM Page 5

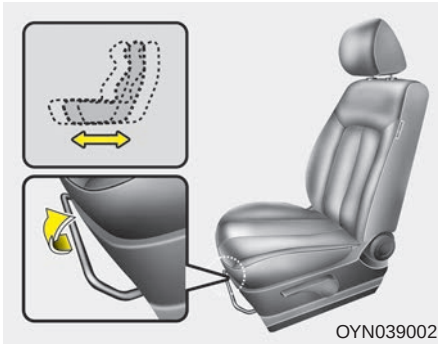
OYN039002

Front seat adjustment

Forward and backward

To move the seat forward or backward:

1. Pull the seat slide adjustment lever that is under the front edge of the seat cushion up and hold it.
2. Slide the seat to the position you desire.
3. Release the lever and make sure the seat is locked in place.

Adjust the seat before driving, and make sure the seat is locked securely by trying to move forward and backward without using the lever. If the seat moves, it is not locked properly.

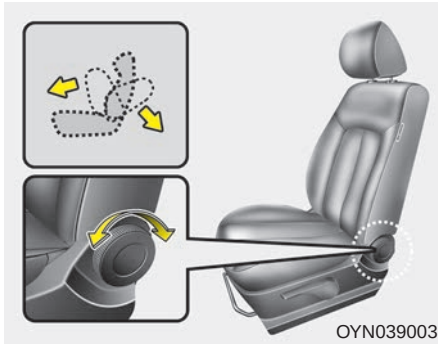
OYN039003

Adjusting the seatback recliner

To recline the seatback, rotate the knob forward or rearward to the desired angle.

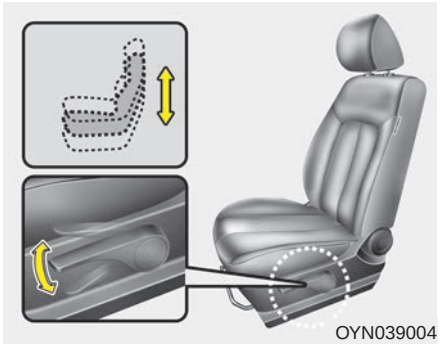
OYN039004

Seat cushion height (for driver's seat)

To change the height of the seat cushion, push the lever that is located on the outside of the seat cushion upwards or downwards.

- To lower the seat cushion, push the lever down several times.
- To raise the seat cushion, pull the lever up several times.

YN ENG 3.QXP 4/16/2012 9:57 AM Page 6

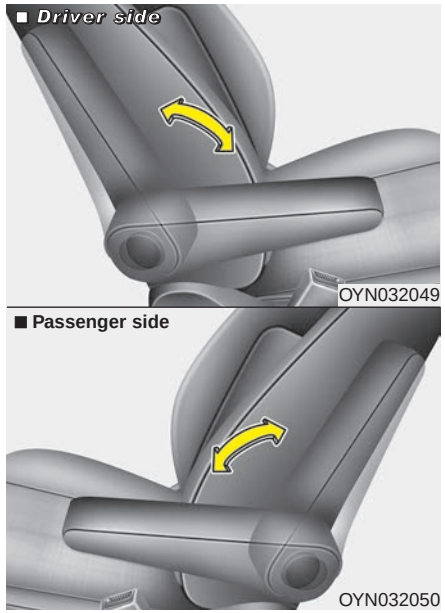

Armrest (if equipped)

To use the armrest, swing down the armrest to the lowest position.

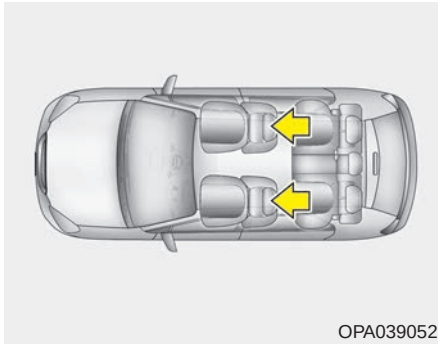

Headrest

The driver's and front passenger's seats are equipped with a headrest for the occupant's safety and comfort.

The headrest not only provides comfort for the driver and front passenger, but also helps to protect the head and neck in the event of a collision.

⚠ WARNING

- **For maximum effectiveness in case of an accident, the headrest should be adjusted so the middle of the headrest is at the same height of the center of gravity of an occupant's head. Generally, the center of gravity of most people's head is similar with the height of the top of their eyes. Also, adjust the headrest as close to your head as possible. For this reason, the use of a cushion that holds the body away from the seatback is not recommended.**
- **Do not operate the vehicle with the headrests removed as severe injury to the occupants may occur in the event of an accident. Headrests may provide protection against neck injuries when properly adjusted.**
- **Do not adjust the headrest position of the driver's seat while the vehicle is in motion.**

YN ENG 3.QXP 4/16/2012 9:57 AM Page 7

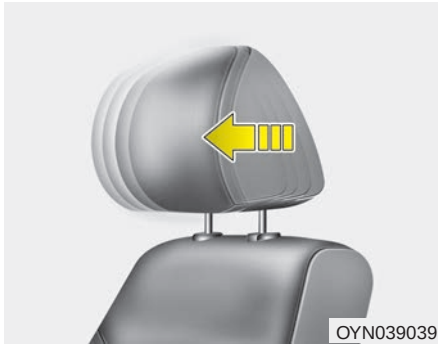

Forward and backward (if equipped)

The headrest will be adjusted forward to 4 positions by pulling it forward. To adjust the headrest backward, pull it fully forward to the foremost position and release it. Adjust the headrest so that it properly supports the head and neck.

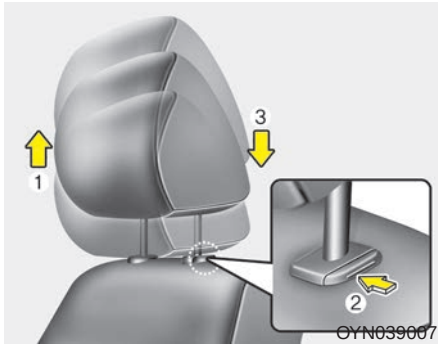

Adjusting the height up and down

To raise the headrest, pull it up to the desired position (1). To lower the headrest, push and hold the release button (2) on the headrest support and lower the headrest to the desired position (3).

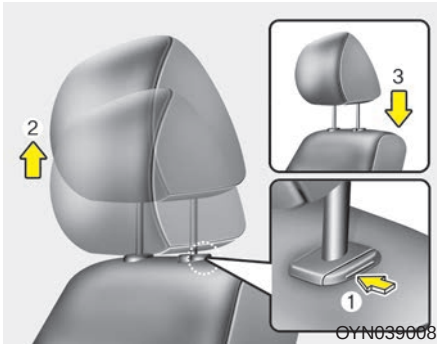

Removal

To remove the headrest, raise it as far as it can go then press the release button (1) while pulling upward (2).

To reinstall the headrest, put the headrest poles (3) into the holes while pressing the release button (1). Then adjust it to the appropriate height.

⚠ WARNING

Make sure the headrest locks in position after adjusting it to properly protect the occupants.

YN ENG 3.QXP 4/16/2012 9:58 AM Page 8

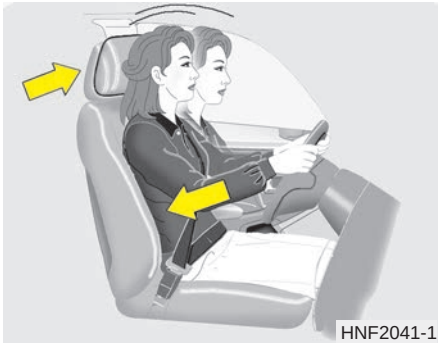
HNF2041-1

Active headrest (if equipped)

The active headrest is designed to move forward and upward during a rear impact. This helps to prevent the driver's and front passenger's heads from moving backward and thus helps prevent neck injuries.

⚠ WARNING

A gap between the seat and the headrest release button may appear when seating on the seat or when you push or pull the seat. Be careful not to get your finger, etc. caught in the gap.

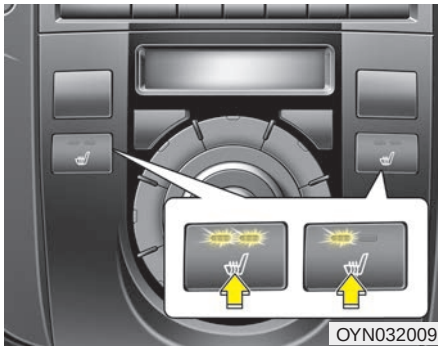
OYN032009

Seat warmer (if equipped)

The seat warmer is provided to warm the front seats during cold weather. With the ignition switch in the ON position, push either of the switches to warm the driver's seat or the front passenger's seat.

The seat warmer defaults to the OFF position whenever the ignition switch is turned on.

During mild weather or under conditions where the operation of the seat warmer is not needed, keep the switches in the "OFF" position.

- Each time you press the button, the temperature setting of the seat will change as follows :

OFF → HIGH( ) → LOW( )

✻ NOTICE

- **With the seat warmer switch in the ON position, the heating system in the seat turns off or on automatically depending on the seat temperature.**
- **If the seat warmer doesn't work when the ambient temperature is below 21 °C (70 °F), have the system checked by an authorized dealer.**

⚠ CAUTION

- ***When cleaning the seats, do not use an organic solvent such as thinner, benzene, alcohol and gasoline. Doing so may damage the surface of the heater or seats.***
- ***To prevent overheating the seat warmer, do not place anything on the seats that insulates against heat, such as blankets, cushions or seat covers while the seat warmer is in operation.***
- ***Do not place heavy or sharp objects on seats equipped with seat warmers. Damage to the seat warming components could occur.***

YN ENG 3.QXP 4/16/2012 9:58 AM Page 9

⚠ WARNING - Seat warmer burns

Passengers should use extreme caution when using seat warmers due to the possibility of excess heating or burns. The occupants must be able to feel if the seat is becoming too warm and to turn the seat warmer off. The seat warmer may cause burns even at low temperatures, especially if used for long periods of time. In particular, the driver must exercise extreme care for the following types of passengers:

1. **Infants, children, elderly or disabled persons, or hospital outpatients**
2. **Persons with sensitive skin or those that burn easily**
3. **Fatigued individuals**
4. **Intoxicated individuals**
5. **Individuals taking medication that can cause drowsiness or sleepiness (sleeping pills, cold tablets, etc.)**

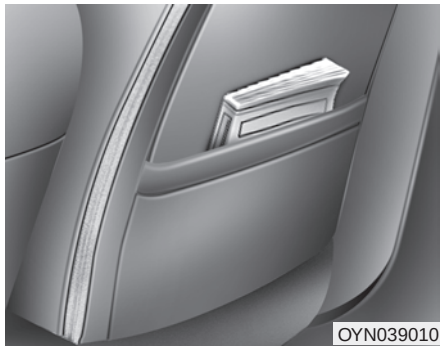

Seatback pocket (if equipped)

⚠ WARNING - Seatback pockets

Do not put heavy or sharp objects in the seatback pockets. In an accident they could come loose from the pocket and injure vehicle occupants.

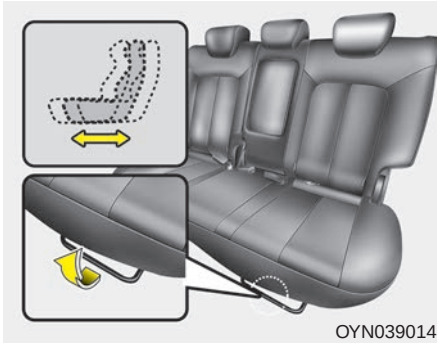

Rear seat adjustment

Forward and backward

To move the seat forward or backward:

1. Pull the seat slide adjustment lever that is under the front edge of the seat cushion up and hold it.
2. Slide the seat to the position you desire.
3. Release the lever and make sure the seat is locked in place.

Make sure the seat is locked securely by trying to move forward and backward without using the lever. If the seat moves, it is not locked properly.

YN ENG 3.QXP 4/16/2012 9:58 AM Page 10

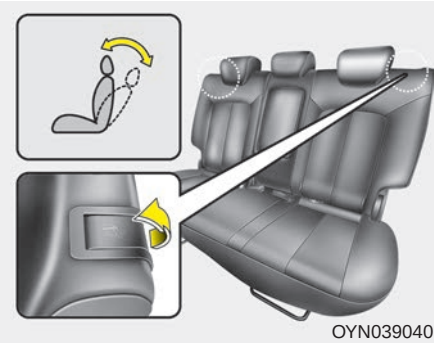
OYN039040

Seatback angle

To recline the seatback:

1. Pull up the seatback recline lever.
2. Hold the lever and adjust the seatback of the seat to the position you desire.
3. Release the lever and make sure the seatback is locked in place. (The lever MUST return to its original position for the seatback to lock.)

Folding the rear seat

The rear seatbacks may be folded to facilitate carrying long items or to increase the luggage capacity of the vehicle.

⚠ WARNING

The purpose of the fold-down rear seatbacks is to allow you to carry longer objects than could not otherwise be accommodated.

Never allow passengers to sit on top of the folded down seatback while the car is moving as this is not a proper seating position and no seat belts are available for use. This could result in serious injury or death in case of an accident or sudden stop. Objects carried on the folded down seatback should not extend higher than the top of the front seats. This could allow cargo to slide forward and cause injury or damage during sudden stops.

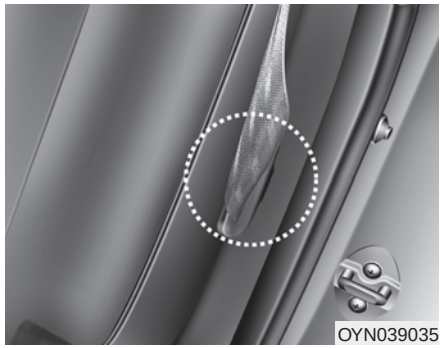
OYN039035

To fold the rear seat

1. Insert the rear seat belt buckle in the pocket between the rear seatback and cushion, and insert the rear seat belt metal tab in the guide to prevent the seat belt from being damaged.
2. Set the front seatback to the upright position and if necessary, slide the front seat forward and the rear seat rearward.
3. Lower the rear headrests to lowest position.

YN ENG 3.QXP 4/16/2012 9:58 AM Page 11

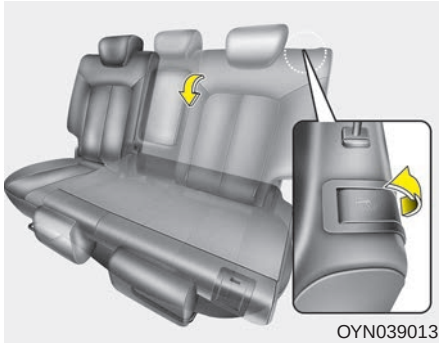
OYN039013

4. Pull the lock release lever and fold the rear seatback forward and down firmly.
5. To use the rear seat, lift the seatback by pulling the lock release lever and push the seatback backward firmly until it clicks into place. Make sure the seatback is locked in place.
6. Return the rear seat belt to the proper position.

⚠ WARNING

When you return the rear seatback to its upright position after being folded down:

Be careful not to damage the seat belt webbing or buckle. Do not allow the seat belt webbing or buckle to get caught or pinched in the rear seat. Ensure that the seatback is completely locked into its upright position by pushing on the top of the seatback. Otherwise, in an accident or sudden stop, the seat could fold down and allow cargo to enter the passenger compartment, which could result in serious injury or death.

⚠ CAUTION - Damaging rear seat belt buckles

When you fold the rear seatback or put luggage on the rear seat cushion, insert the buckle in the pocket between the rear seatback and cushion. Doing so can prevent the buckle from being damaged by the rear seatback or luggage.

⚠ CAUTION - Rear seat belts

When returning the rear seatbacks to the upright position, remember to return the rear shoulder belts to their proper position.

⚠ WARNING - Cargo

Cargo should always be secured to prevent it from being thrown about the vehicle in a collision and causing injury to the vehicle occupants. Special care of objects should be taken when placing them in the rear seats, since those may hit the front seat occupants in a frontal collision.

⚠ WARNING - Cargo loading

Make sure the engine is off, the automatic transaxle is in P (Park) or the manual transaxle is in R (Reverse) or 1st, and the parking brake is securely applied whenever loading or unloading cargo. Failure to take these steps may allow the vehicle to move if the shift lever is inadvertently moved to another position.

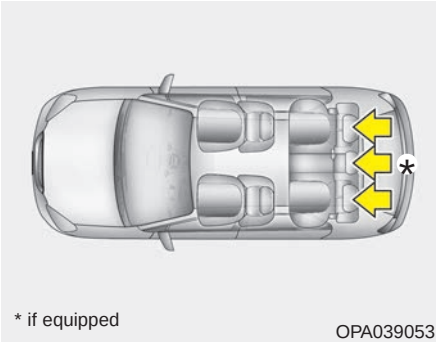

* if equipped

OPA039053

Headrest

The rear seat(s) is equipped with headrests in all the seating positions for the occupant's safety and comfort.

The headrest not only provides comfort for passengers, but also helps to protect the head and neck in the event of a collision.

⚠ WARNING

- **For maximum effectiveness in case of an accident, the headrest should be adjusted so the middle of the headrest is at the same height of the center of gravity of an occupant's head. Generally, the center of gravity of most people's head is similar with the height of the top of their eyes. Also adjust the headrest as close to your head as possible. The use of a cushion that holds the body away from the seatback is not recommended.**
- **Do not operate the vehicle with the headrests removed as severe injury to an occupant may occur in the event of an accident. Headrests may provide protection against severe neck injuries when properly adjusted.**

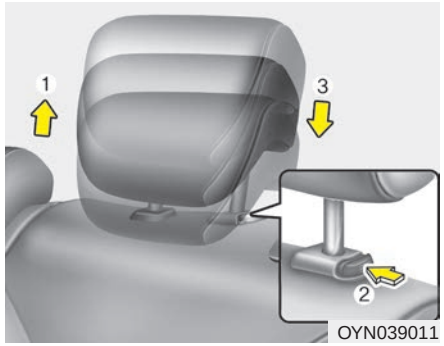

OYN039011

Adjusting the height up and down

To raise the headrest, pull it up to the highest position (1). To lower the headrest, push and hold the release button (2) on the headrest support and lower the headrest to the lowest position (3).

YN ENG 3.QXP 4/16/2012 9:58 AM Page 13

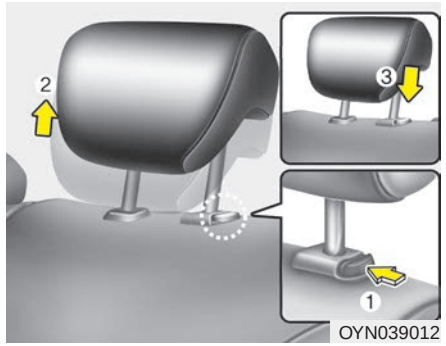

Removal

To remove the headrest, raise it as far as it can go then press the release button (1) while pulling upward (2).

To reinstall the headrest, put the headrest poles (3) into the holes while pressing the release button (1). Then adjust it to the appropriate height.

⚠ WARNING

Make sure the headrest locks in position after adjusting it to properly protects the occupants.

YN ENG 3.QXP 4/16/2012 9:58 AM Page 14

SEAT BELTS

Seat belt restraint system

⚠ WARNING

- For maximum restraint system protection, the seat belts must always be used whenever the car is moving.
- Seat belts are most effective when seatbacks are in the upright position.
- Children age 12 and under must always be properly restrained in the rear seat. Never allow children to ride in the front passenger seat. If a child over 12 must be seated in the front seat, he/she must be properly belted and the seat should be moved as far back as possible.
- Never wear the shoulder belt under your arm or behind your back. An improperly positioned shoulder belt can cause serious injuries in a crash. The shoulder belt should be positioned midway over your shoulder across your collarbone.

(Continued)

(Continued)

- Avoid wearing twisted seat belts. A twisted belt can't do its job as well. In a collision, it could even cut into you. Be sure the belt webbing is straight and not twisted.
- Be careful not to damage the belt webbing or hardware. If the belt webbing or hardware is damaged, replace it.

⚠ WARNING

Seat belts are designed to bear upon the bony structure of the body, and should be worn low across the front of the pelvis or the pelvis, chest and shoulders, as applicable; wearing the lap section of the belt across the abdominal area must be avoided.

Seat belts should be adjusted as firmly as possible, consistent with comfort, to provide the protection for which they have been designed.

A slack belt will greatly reduce the protection afforded to the wearer.

(Continued)

(Continued)

Care should be taken to avoid contamination of the webbing with polishes, oils and chemicals, and particularly battery acid. Cleaning may safely be carried out using mild soap and water. The belt should be replaced if webbing becomes frayed, contaminated or damaged.

It is essential to replace the entire assembly after it has been worn in a severe impact even if damage to the assembly is not obvious. Belts should not be worn with straps twisted. Each belt assembly must only be used by one occupant; it is dangerous to put a belt around a child being carried on the occupant's lap.

YN ENG 3.QXP 4/16/2012 9:58 AM Page 15

⚠ WARNING

- **No modifications or additions should be made by the user which will either prevent the seat belt adjusting devices from operating to remove slack, or prevent the seat belt assembly from being adjusted to remove slack.**
- **When you fasten the seat belt, be careful not to latch the seat belt in buckles of other seat. It's very dangerous and you may not be protected by the seat belt properly.**
- **Do not unfasten the seat belt and do not fasten and unfasten the seat belt repeatedly while driving. This could result in loss of control, and an accident causing death, serious injury, or property damage.**
- **When fastening the seat belt, make sure that the seat belt does not pass over objects that are hard or can break easily.**
- **Make sure there is nothing in the buckle. The seat belt may not be fastened securely.**



1GQA2083

Seat belt warning

Type A

As a reminder to the driver, the seat belt warning light will blink for approximately 6 seconds each time you turn the ignition switch ON regardless of belt fastening.

If the driver's seat belt is unfastened after the ignition switch is ON, the seat belt warning light blinks again for approximately 6 seconds.

If the driver's seat belt is not fastened when the ignition switch is turned ON or if it is unfastened after the ignition switch is ON, the seat belt warning chime will sound for approximately 6 seconds. At this time, if the seat belt is fastened, the chime will stop at once. (if equipped)

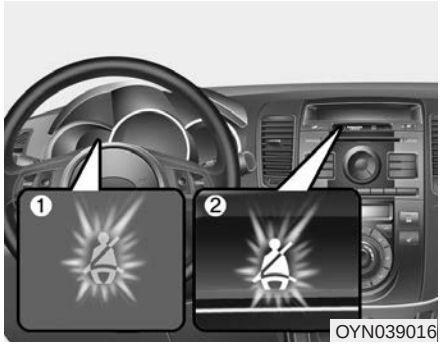

OYN039016

Type B

(1) Driver's seat belt warning light

(2) Front passenger's seat belt warning light

As a reminder to the driver and front passenger, the driver's and front passenger's seat belt warning lights will illuminate for approximately 6 seconds each time you turn the ignition switch ON regardless of belt fastening.

If the driver's or front passenger's seat belt is not fastened when the ignition switch is turned ON or if it is disconnected after the ignition switch is turned ON, the corresponding seat belt warning light will illuminate until the belt is fastened.

YN ENG 3.QXP 4/16/2012 9:58 AM Page 16

If you continue not to fasten the seat belt and you drive over 9km/h, the illuminated warning light will start to blink until you drive under 6km/h.

If you continue not to fasten the seat belt and you drive over 20km/h the seat belt warning chime will sound for approximately 100 seconds and the corresponding warning light will blink.

✻ NOTICE

- **You can find the front passenger's seat belt warning light on the center fascia panel.**
- **Although the front passenger seat is not occupied, the seat belt warning light will blink or illuminate for 6 seconds.**
- **The front passenger's seat belt warning may operate when luggage is placed on the front passenger seat.**

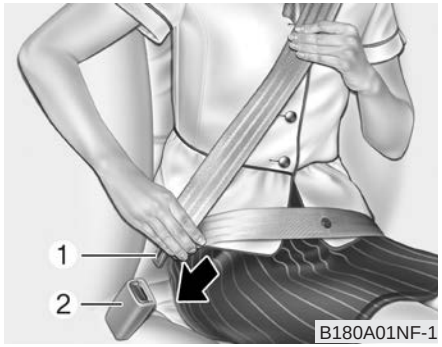

Lap/shoulder belt

To fasten your seat belt:

To fasten your seat belt, pull it out of the retractor and insert the metal tab (1) into the buckle (2). There will be an audible "click" when the tab locks into the buckle.

The seat belt automatically adjusts to the proper length only after the lap belt portion is adjusted manually so that it fits snugly around your hips. If you lean forward in a slow, easy motion, the belt will extend and let you move around. If there is a sudden stop or impact, however, the belt will lock into position. It will also lock if you try to lean forward too quickly.

✻ NOTICE

If you are not able to pull out the safety belt from the retractor, firmly pull the belt out and release it. Then you will be able to pull the belt out smoothly.

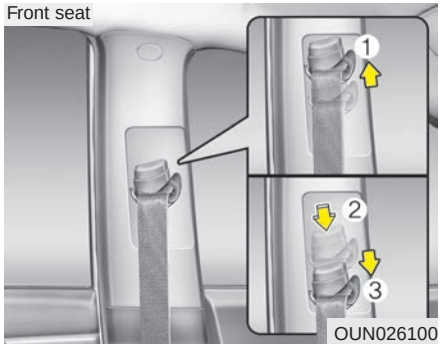

You can adjust the height of the shoulder belt anchor to one of 4 positions for maximum comfort and safety.

If the height of the adjusting seat belt is too near your neck, you will not be getting the most effective protection. The shoulder portion should be adjusted so that it lies across your chest and midway over your shoulder nearest the door and not your neck.

YN ENG 3.QXP 4/16/2012 9:58 AM Page 17

To adjust the height of the seat belt anchor, lower or raise the height adjuster into an appropriate position.

To raise the height adjuster, pull it up (1). To lower it, push it down (3) while pressing the height adjuster button (2).

Release the button to lock the anchor into position. Try sliding the height adjuster to make sure that it has locked into position.

⚠ WARNING

- **Verify the shoulder belt anchor is locked into position at the appropriate height. Never position the shoulder belt across your neck or face. Improperly positioned seat belts can cause serious injuries in an accident.**
- **Failure to replace seat belts after an accident could leave you with damaged seat belts that will not provide protection in the event of another collision leading to personal injury or death. Replace your seat belts after being in an accident as soon as possible.**

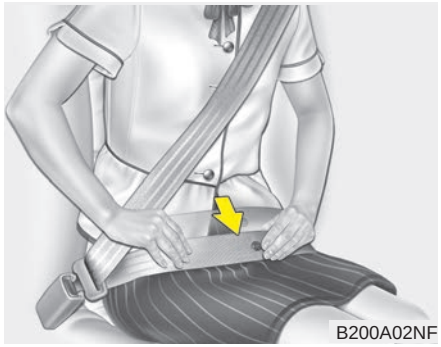

B200A02NF

⚠ WARNING

You should place the lap belt portion as low as possible and snugly across your hips, not on your waist. If the lap belt is located too high on your waist, it may increase the chance of injury in the event of a collision. Both arms should not be under or over the belt. Rather, one should be over and the other under, as shown in the illustration.

Never wear the seat belt under the arm nearest the door.

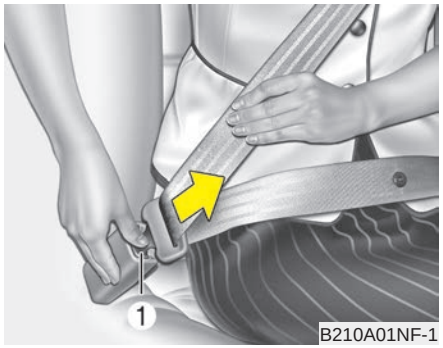

B210A01NF-1

To release the seat belt:

The seat belt is released by pressing the release button (1) in the locking buckle. When it is released, the belt should automatically draw back into the retractor.

If this does not happen, check the belt to be sure it is not twisted, then try again.

YN ENG 3.QXP 4/16/2012 9:58 AM Page 18

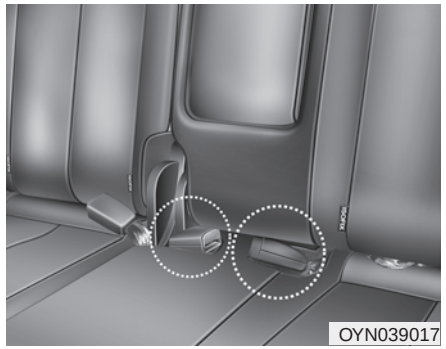

Stowing the rear seat belt

The rear seat belt buckles can be stowed in the pocket between the rear seatback and cushion when not in use.

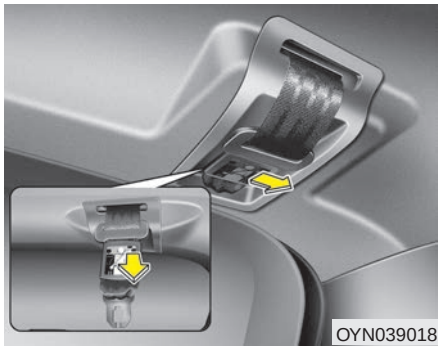

3 Point rear center belt (if equipped)

To fasten the rear center belt

1. Extract the tongue plates from the holes on the belt assembly cover and slowly pull the tongue plates out from the retractor.

⚠ CAUTION - Cargo

Be sure that the cargo is securely loaded in the rear cargo area. Doing not so may damage the rear center safety belt in sudden stop or certain collisions.

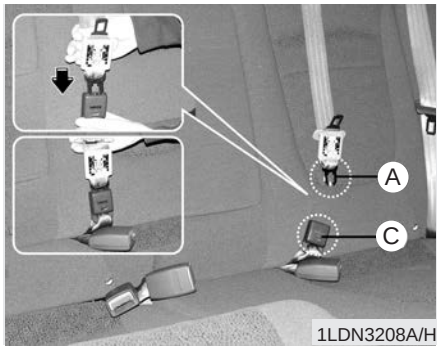

2. Insert the tongue plate (A) into the open end of the anchor connector (C) until an audible “click" is heard, indicating the latch is locked. Make sure the belt is not twisted.

YN ENG 3.QXP 4/16/2012 9:58 AM Page 19

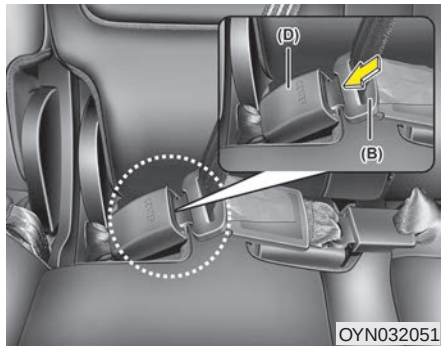

3. Pull the tongue plate (B) and insert the tongue plate (B) into the open end of the buckle (D) until an audible “click” is heard, indicating the latch is locked. Make sure the belt is not twisted.

There will be an audible “click” when the tab locks in the buckle. The seat belt automatically adjusts to the proper length only after the lap belt is adjusted manually so that it fits snugly around your hips, if you lean forward in a slow, easy motion, the belt will extend and let you move around. If there is a sudden stop or impact, the belt will lock into position. It will also lock if you try to lean forward too quickly.

⚠ WARNING

When using the rear seat center belt, you must lock all tongue plates and buckles. If any tongue plate or buckle is not locked, it will increase the chance of injury in the event of collision.

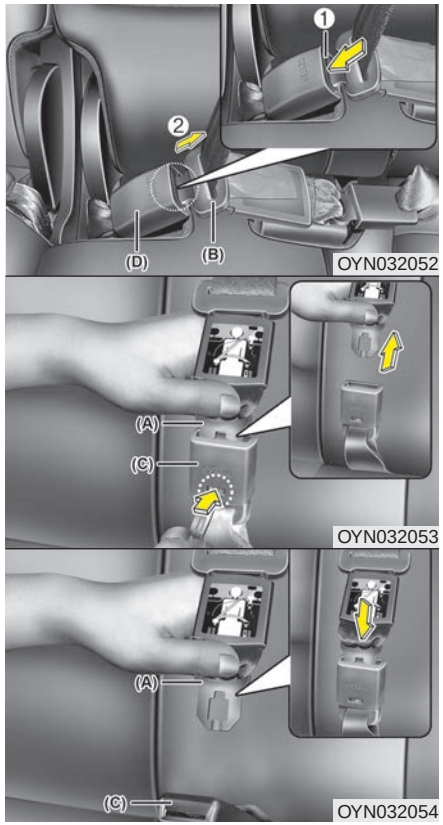

To unfasten the rear center belt

YN ENG 3.QXP 4/16/2012 9:59 AM Page 20

1. Press the release button on the buckle (D) and remove the tongue plate (B) from the buckle (D).
2. To retract the rear center seatbelt, insert the key or similar small rigid device into the web release button (C) on the anchor connector. Pull up on the seat belt web (A) and allow the webbing to retract automatically.

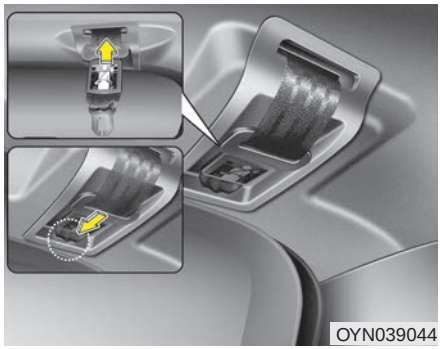

3. Insert the tongue plates into the holes and hang the tongue plates on the hooks on the belt assembly cover.

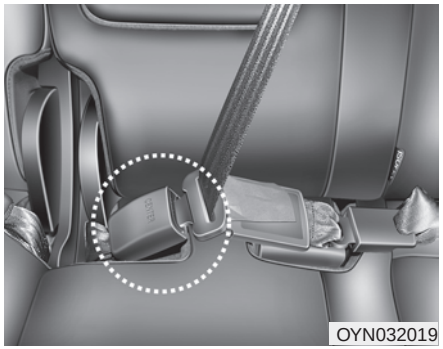

When using the rear center seat belt, the buckle with the “CENTER” mark must be used. (if equipped)

YN ENG 3.QXP 4/16/2012 9:59 AM Page 21


OED030300

Pre-tensioner seat belt (if equipped)

Your vehicle is equipped with driver's and front passenger's pre-tensioner seat belts. The purpose of the pre-tensioner is to make sure that the seat belts fit tightly against the occupant's body in certain frontal collisions. The pre-tensioner seat belts may be activated in crashes where the frontal collision is severe enough.

When the vehicle stops suddenly, or if the occupant tries to lean forward too quickly, the seat belt retractor will lock into position. In certain frontal collisions, the pre-tensioner will activate and pull the seat belt into tighter contact against the occupant's body.

If the system senses excessive seat belt tension on the driver or passenger's seat belt when the pre-tensioner activates, the load limiter inside the pre-tensioner will release some of the pressure on the affected seat belt. (if equipped)

⚠ WARNING

For your safety, be sure that the belt webbing is not loose or twisted and always sit properly on your seat.

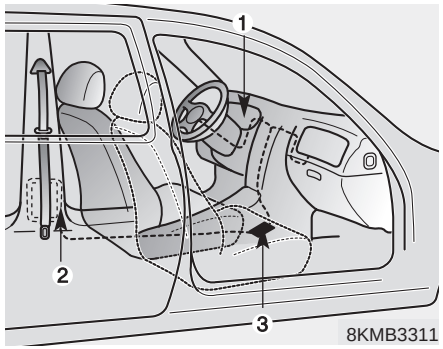

8KMB3311

The seat belt pre-tensioner system consists mainly of the following components. Their locations are shown in the illustration:

1. SRS air bag warning light
2. Retractor pre-tensioner assembly
3. SRS control module

YN ENG 3.QXP 4/16/2012 9:59 AM Page 22

⚠ WARNING

To obtain maximum benefit from a pre-tensioner seat belt:

1. **The seat belt must be worn correctly and adjusted to the proper position. Please read and follow all of the important information and precautions about your vehicle's occupant safety features – including seat belts and air bags – that are provided in this manual.**
2. **Be sure you and your passengers always wear seat belts properly.**

✻ NOTICE

- **Both the driver's and front passenger's pre-tensioner seat belts will be activated in certain frontal collisions. The pre-tensioner seat belts can be activated, where the frontal collision is severe enough, together with the air bags.**
- **When the pre-tensioner seat belts are activated, a loud noise may be heard and fine dust, which may appear to be smoke, may be visible in the passenger compartment. These are normal operating conditions and are not hazardous.**
- **Although it is harmless, the fine dust may cause skin irritation and should not be breathed for prolonged periods. Wash all exposed skin areas thoroughly after an accident in which the pre-tensioner seat belts were activated.**

✻ NOTICE

Because the sensor that activates the SRS air bag is connected with the pre-tensioner seat belt, the SRS air bag warning light (🪑) on the instrument panel will illuminate for approximately 6 seconds after the ignition switch has been turned to the ON position, and then it should turn off.

⚠ CAUTION

If the pre-tensioner seat belt is not working properly, this warning light will illuminate even if there is no malfunction of the SRS air bag. If the SRS air bag warning light does not illuminate when the ignition switch is turned to ON, or if it remains illuminated after illuminating for approximately 6 seconds, or if it illuminates while the vehicle is being driven, we recommend that the system be inspected by an authorized Kia dealer.

⚠ WARNING

- **Pre-tensioners are designed to operate only one time. After activation, pre-tensioner seat belts must be replaced. All seat belts, of any type, should always be replaced after they have been worn during a collision.**

(Continued)

YN ENG 3.QXP 4/16/2012 9:59 AM Page 23

(Continued)

- **The pre-tensioner seat belt assembly mechanisms become hot during activation. Do not touch the pre-tensioner seat belt assemblies for several minutes after they have been activated.**
- **Do not attempt to inspect or replace the pre-tensioner seat belts yourself. We recommend that the system be serviced by an authorized Kia dealer.**
- **Do not strike the pre-tensioner seat belt assemblies.**
- **Improper handling of the pre-tensioner seat belt assemblies, and failure to heed the warnings not to strike, modify, inspect, replace, service or repair the pre-tensioner seat belt assemblies may lead to improper operation or inadvertent activation and serious injury.**
- **Always wear the seat belts when driving or riding in a motor vehicle.**
- **If the vehicle or pre-tensioner seat belt must be discarded, we recommend that you contact an authorized Kia dealer.**

Seat belt precautions

⚠ WARNING

All occupants of the vehicle must wear their seat belts at all times. Seat belts and child restraints reduce the risk of serious or fatal injuries for all occupants in the event of a collision or sudden stop. Without a seat belt, occupants could be shifted too close to a deploying air bag, strike the interior structure or be thrown from the vehicle. Properly worn seat belts greatly reduce these hazards.

Always follow the precautions about seat belts, air bags and occupant seating contained in this manual.

Infant or small child

You should be aware of the specific requirements in your country. Child and/or infant seats must be properly placed and installed in the rear seat. For more information about the use of these restraints, refer to “Child restraint system” in this section.

⚠ WARNING

Every person in your vehicle needs to be properly restrained at all times, including infants and children. Never hold a child in your arms or lap when riding in a vehicle. The violent forces created during a crash will tear the child from your arms and throw the child against the interior. Always use a child restraint appropriate for your child's height and weight.

✻ NOTICE

Small children are best protected from injury in an accident when properly restrained in the rear seat by a child restraint system that meets the requirements of the Safety Standards of your country. Before buying any child restraint system, make sure that it has a label certifying that it meets Safety Standards of your country. The restraint must be appropriate for your child's height and weight. Check the label on the child restraint for this information. Refer to “Child restraint system” in this section.

YN ENG 3.QXP 4/16/2012 9:59 AM Page 24

Larger children

Children who are too large for child restraint systems should always occupy the rear seat and use the available lap/shoulder belts. The lap portion should be fastened and snugged on the hips and as low as possible. Check if belt fits periodically. A child's squirming could put the belt out of position. Children are given the most safety in the event of an accident when they are restrained by a proper restraint system in the rear seat. If a larger child (over age 12) must be seated in the front seat, the child should be securely restrained by the available lap/shoulder belt and the seat should be placed in the rearmost position. Children age 12 and under should be restrained securely in the rear seat. NEVER place a child age 12 and under in the front seat. NEVER place a rear facing child seat in the front seat of a vehicle.

If the shoulder belt portion slightly touches the child's neck or face, try placing the child closer to the center of the vehicle. If the shoulder belt still touches their face or neck they need to be returned to a child restraint system.

⚠ WARNING - Shoulder belts on small children

- **Never allow a shoulder belt to be in contact with a child's neck or face while the vehicle is in motion.**
- **If seat belts are not properly worn and adjusted on children, there is a risk of death or serious injury.**

Pregnant women

The use of a seat belt is recommended for pregnant women to lessen the chance of injury in an accident. When a seat belt is used, the lap belt portion should be placed as low and snugly as possible on the hips, not across the abdomen. For specific recommendations, consult a physician.

⚠ WARNING - Pregnant women

Pregnant women must never place the lap portion of the safety belt over the area of the abdomen where the fetus is located or above the abdomen where the belt could crush the fetus during an impact.

Injured person

A seat belt should be used when an injured person is being transported. When this is necessary, you should consult a physician for recommendations.

One person per belt

Two people (including children) should never attempt to use a single seat belt. This could increase the severity of injuries in case of an accident.

YN ENG 3.QXP 4/16/2012 9:59 AM Page 25

Do not lie down

To reduce the chance of injuries in the event of an accident and to achieve maximum effectiveness of the restraint system, all passengers should be sitting up and the front and rear seats should be in an upright position when the car is moving. A seat belt cannot provide proper protection if the person is lying down in the rear seat or if the front and rear seats are in a reclined position.

⚠ WARNING

Riding with a reclined seatback increases your chance of serious or fatal injuries in the event of a collision or sudden stop. The protection of your restraint system (seat belts and air bags) is greatly reduced by reclining your seat. Seat belts must be snug against your hips and chest to work properly. The more the seatback is reclined, the greater the chance that an occupant's hips will slide under the lap belt causing serious internal injuries or the occupant's neck could strike the shoulder belt. Drivers and passengers should always sit well back in their seats, properly belted, and with the seatbacks upright.

Care of seat belts

Seat belt systems should never be disassembled or modified. In addition, care should be taken to assure that seat belts and belt hardware are not damaged by seat hinges, doors or other abuse.

⚠ WARNING

When you return the rear seatback to its upright position after the rear seatback has been folded down, be careful not to damage the seat belt webbing or buckle. Be sure that the webbing or buckle does not get caught or pinched in the rear seat. A seat belt with damaged webbing or buckle could possibly fail during a collision or sudden stop, resulting in serious injury. If the webbing or buckles are damaged, get them replaced immediately.

Periodic inspection

All seat belts should be inspected periodically for wear or damage of any kind. Any damaged parts should be replaced as soon as possible.

Keep belts clean and dry

Seat belts should be kept clean and dry. If belts become dirty, they can be cleaned by using a mild soap solution and warm water. Bleach, dye, strong detergents or abrasives should not be used because they may damage and weaken the fabric.

When to replace seat belts

The entire in-use seat belt assembly or assemblies should be replaced if the vehicle has been involved in an accident. This should be done even if no damage is visible. Additional questions concerning seat belt operation we recommend that you consult an authorized Kia dealer.

YN ENG 3.QXP 4/16/2012 9:59 AM Page 26

CHILD RESTRAINT SYSTEM

Children riding in the car should sit in the rear seat and must always be properly restrained to minimize the risk of injury in an accident, sudden stop or sudden maneuver. According to accident statistics, children are safer when properly restrained in the rear seats than in the front seat. Larger children not in a child restraint should use one of the seat belts provided.

You should be aware of the specific requirements in your country. Child and/or infant safety seats must be properly placed and installed in the rear seat. You must use a commercially available child restraint system that meets the requirements of the Safety Standards of your country.

Child restraint systems are designed to be secured in vehicle seats by lap belts or the lap belt portion of a lap/shoulder belt, or by a tether anchor and/or ISOFIX anchors (if equipped).

Children could be injured or killed in a crash if their restraints are not properly secured. For small children and babies, a child seat or infant seat must be used.

Before buying a particular child restraint system, make sure it fits your car seat and seat belts, and fits your child. Follow all the instructions provided by the manufacturer when installing the child restraint system.

⚠ WARNING

- **A child restraint system must be placed in the rear seat. Never install a child or infant seat on the front passenger's seat. Should an accident occur and cause the passenger-side air bag to deploy, it could severely injure or kill an infant or child seated in an infant or child seat. Thus only use a child restraint in the rear seat of your vehicle.**
- **A seat belt or child restraint system can become very hot if it is left in a closed vehicle on a sunny day, even if the outside temperature does not feel hot. Be sure to check the seat cover and buckles before placing a child there.**

(Continued)

(Continued)

- **When the child restraint system is not in use, store it in the luggage area or fasten it with a seat belt so that it will not be thrown forward in the case of a sudden stop or an accident.**
- **Children may be seriously injured or killed by an inflating air bag. All children, even those too large for child restraints, must ride in the rear seat.**

YN ENG 3.QXP 4/16/2012 9:59 AM Page 27

⚠ WARNING

To reduce the chance of serious or fatal injuries:

- **Children of all ages are safer when restrained in the rear seat. A child riding in the front passenger seat can be forcefully struck by an inflating air bag resulting in serious or fatal injuries.**
- **Always follow the instructions for installation and use of the child restraint maker.**
- **Always make sure the child seat is secured properly in the car and your child is securely restrained in the child seat.**
- **Never hold a child in your arms or lap when riding in a vehicle. The violent forces created during a crash will tear the child from your arms and throw the child against the car's interior.**
- **Never put a seat belt over yourself and a child. During a crash, the belt could press deep into the child causing serious internal injuries.**

(Continued)

(Continued)

- **Never leave children unattended in a vehicle – not even for a short time. The car can heat up very quickly, resulting in serious injuries to children inside. Even very young children may inadvertently cause the vehicle to move, entangle themselves in the windows, or lock themselves or others inside the vehicle.**
- **Never allow two children, or any two persons, to use the same seat belt.**
- **Children often squirm and reposition themselves improperly. Never let a child ride with the shoulder belt under their arm or behind their back. Always properly position and secure children in rear seat.**
- **Never allow a child to stand-up or kneel on the seat or floorboard of a moving vehicle. During a collision or sudden stop, the child can be violently thrown against the vehicles interior, resulting in serious injury.**

(Continued)

(Continued)

- **Never use an infant carrier or a child safety seat that "hooks" over a seatback, it may not provide adequate security in an accident.**
- **Seat belts can become very hot, especially when the car is parked in direct sunlight. Always check seat belt buckles before fastening them over a child.**
- **After an accident, we recommend that the system be checked by an authorized Kia dealer.**
- **If there is not enough space to place the child restraint system because of the driver's seat, install the child restraint system in the rear right seat.**

YN ENG 3.QXP 4/16/2012 9:59 AM Page 28

Rearward-facing child restraint system

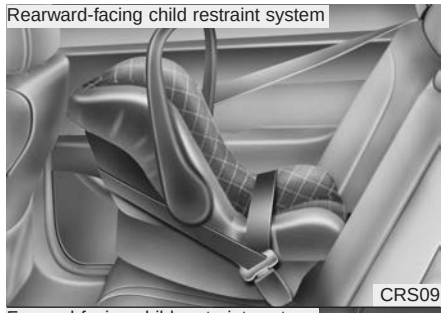

CRS09

Forward-facing child restraint system



OYN039037

Using a child restraint system

For small children and babies, the use of a child seat or infant seat is required. This child seat or infant seat should be of appropriate size for the child and should be installed in accordance with the manufacturer's instructions.

For safety reasons, we recommend that the child restraint system be used in the rear seats.

⚠ WARNING

Never place a rear-facing child restraint in the front passenger seat, because of the danger that an inflating passenger-side air bag could impact the rear-facing child restraint and kill the child.

⚠ WARNING - Child seat installation

- **A child can be seriously injured or killed in a collision if the child restraint is not properly anchored to the car and the child is not properly restrained in the child restraint. Before installing the child restraint system, read the instructions supplied by the child restraint system manufacturer.**
- **If the seat belt does not operate as described in this section, we recommend that the system be checked by an authorized Kia dealer.**
- **Failure to observe this manual's instructions regarding child restraint system and the instructions provided with the child restraint system could increase the chance and/or severity of injury in an accident.**

YN ENG 3.QXP 4/16/2012 9:59 AM Page 29

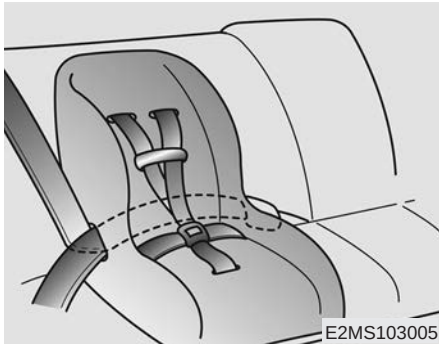
E2MS103005

Installing a child restraint system by lap/shoulder belt

To install a child restraint system on the outboard or center rear seats, do the following:

1. Place the child restraint system in the seat and route the lap/shoulder belt around or through the restraint, following the restraint manufacturer's instructions. Be sure the seat belt webbing is not twisted.

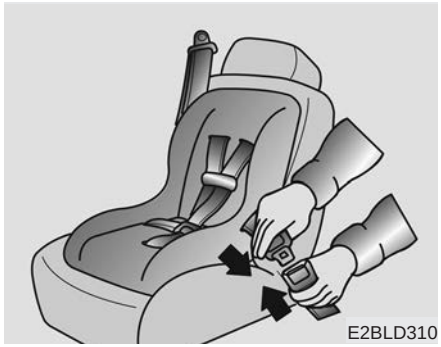
E2BLD310

2. Fasten the lap/shoulder belt latch into the buckle. Listen for the distinct "click" sound.

Position the release button so that it is easy to access in case of an emergency.


MMSA3030

3. Buckle the seat belt and allow the seat belt to take up any slack. After installation of the child restraint system, try to move it in all directions to be sure the child restraint system is securely installed.

If you need to tighten the belt, pull more webbing toward the retractor. When you unbuckle the seat belt and allow it to retract, the retractor will automatically revert back to its normal seated passenger emergency locking usage condition.

Child seat restraint suitability for seat position using the seat belt - For Europe

Use child safety seats that have been officially approved and are appropriate for your children. When using the child safety seats, refer to the following table.

Mass Group	Seating Position		
	Front Passenger	Rear Outboard	Rear Center
0 : Up to 10 kg (0 - 9 months)	U	U	U
0+ : Up to 13 kg (0 - 2 years)	U	U	U
I : 9 kg to 18 kg (9 months - 4 years)	U	U	U
II & III : 15 kg to 36 kg (4 - 12 years)	U	U	U

U : Suitable for "universal" category restraints approved for use in this mass group
UF : Suitable for forward-facing "universal" category restraints approved for use in this mass group
X : Seat position not suitable for children in this mass group

⚠ WARNING

We recommend that a child restraint seat be installed in the rear seat, even if the front passenger's air bag ON/OFF switch is set to the OFF position. To ensure the safety of your child, the front passenger's air bag must be deactivated when it should be necessary to install a child restraint seat on the front passenger seat in exceptional circumstances.

YN ENG 3.QXP 4/16/2012 9:59 AM Page 31

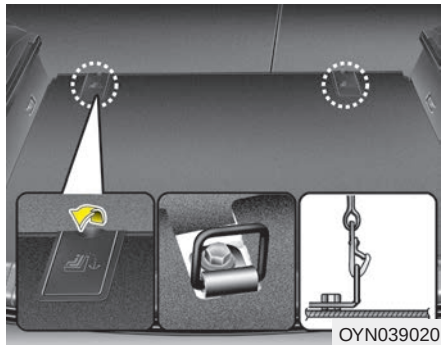
OYN039020

Securing a child restraint seat with "Tether Anchor" system (if equipped)

Child restraint hook holders are located on the floor behind the rear seats.


OYN039021

1. Route the child restraint seat strap over the seatback.
   For vehicles with adjustable headrest, route the tether strap under the headrest and between the headrest posts, otherwise route the tether strap over the top of the seatback.
2. If your vehicle is equipped with a luggage board, set the board to the lower position.
3. Open the tether anchor cover.
4. Connect the tether strap hook to the appropriate child restraint hook holder and tighten to secure the seat.

⚠ WARNING

A child can be seriously injured or killed in a collision if the child restraint is not properly anchored to the car and the child is not properly restrained in the child restraint. Always follow the child seat manufacturer's instructions for installation and use.

⚠ WARNING - Tether strap

Never mount more than one child restraint to a single tether or to a single lower anchorage point. The increased load caused by multiple seats may cause the tethers or anchorage points to break, causing serious injury or death.

YN ENG 3.QXP 4/16/2012 9:59 AM Page 32

⚠ WARNING - Child restraint check

Check that the child restraint system is secure by pushing and pulling it in different directions. Incorrectly fitted child restraints may swing, twist, tip or separate causing death or serious injury.

⚠ WARNING - Child restraint anchorage

- **Child restraint anchorages are designed to withstand only those loads imposed by correctly fitted child restraints. Under no circumstances are they to be used for adult seat belts or harnesses or for attaching other items or equipment to the vehicle.**
- **The tether strap may not work properly if attached somewhere other than the correct tether anchor.**

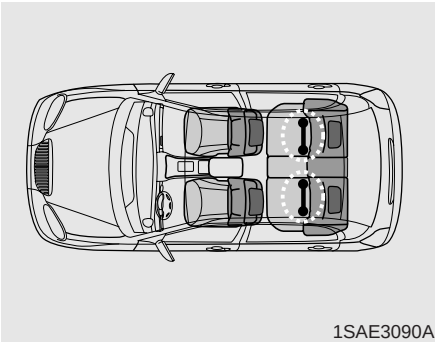

1SAE3090A

Securing a child restraint system with "ISOFIX" system and "Tether Anchorage" system (if equipped)

ISOFIX is a standardized method of fitting child seats that eliminates the need to use the standard adult seat belt to secure the seat in the vehicle. This enables a much more secure and positive location with the added benefit of easier and quicker installation.

An ISOFIX-seat may only be installed if it has vehicle-specific or universal approval in accordance with the requirements of ECE-R 44.

✻ ISOFIX: International Standards Origanisation FIX

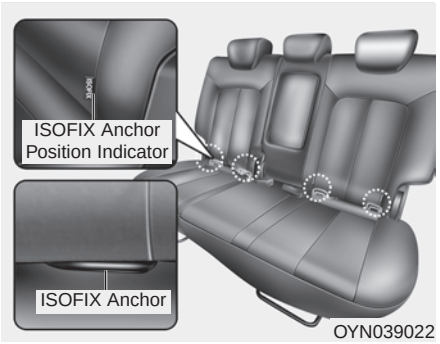

OYN039022

There are child restraint symbols located on the lower portion of each side of the rear seatbacks. These symbols indicate the position of the lower anchors for child restraints so equipped.

YN ENG 3.QXP 4/16/2012 9:59 AM Page 33

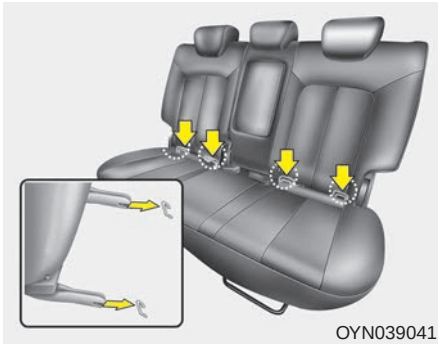
OYN039041

Both rear outboard seats are equipped with a pair of ISOFIX anchorages as well as a corresponding top tether anchorage on the back side of the back rest. The ISOFIX anchorages are located between seat cushion and back rest, marked with the ISOFIX icon.

For installation, CRS ISOFIX connecters have to engage with the vehicles ISOFIX anchorages (listen for a CLICK, check potential visual indicators on the CRS and cross-check by pulling).

CRS with universal approval to ECE-R 44 need to be fixed additionally with a top tether strap connected to the corresponding top tether anchorage point in the back rest.

The installing and the use of a child-seat has to be done according to the installing-manual, which is added to the ISOFIX-seat.

⚠ WARNING

Install the child restraint seat fully rearward against the seatback with the seatback inclined two positions from the rearmost latched position.

⚠ WARNING

- **When using the vehicle's "ISOFIX" system to install a child restraint system in the rear seat, all unused vehicle rear seat belt metal latch plates or tabs must be latched securely in their seat belt buckles and the seat belt webbing must be retracted behind the child restraint to prevent the child from reaching and taking hold of unretracted seat belts. Unlatched metal latch plates or tabs may allow the child to reach the unretracted seat belts which may result in strangulation and a serious injury or death to the child in the child restraint.**
- **Do not place anything around the lower anchors. Also make sure that the seat belt is not caught in the lower anchors.**

YN ENG 3.QXP 4/16/2012 9:59 AM Page 34

To secure the child restraint seat:

1. To engage the child restraint seat to the ISOFIX lower anchor, insert the child restraint seat latch into the ISOFIX anchor. Listen for the audible “click” sound.

⚠ CAUTION

Do not allow the rear seat belt webbing to get scratched or pinched by the ISOFIX-seat latch and ISOFIX anchor during the installation.

2. Connect the tether strap hook to the child restraint hook holder and tighten to secure the seat. (Refer to the previous page.)

⚠ WARNING

- **Do not install a child restraint seat at the center of the rear seat using the vehicle's ISOFIX anchors. The ISOFIX anchors are only provided for the left and right outboard rear seating positions. Do not misuse the ISOFIX anchors by attempting to attach a child restraint seat in the middle of the rear seat to the ISOFIX anchors.**

  In a crash, the child restraint seat ISOFIX attachments may not be strong enough to secure the child restraint seat properly in the center of the rear seat and may break, causing serious injury or death.
- **Do not mount more than one child restraint to a child restraint lower anchorage point. The improper increased load may cause the anchorage points or tether anchor to break, causing serious injury or death.**

(Continued)

(Continued)

- **Attach the ISOFIX or ISOFIX-compatible child restraint seat only to the appropriate locations shown in the illustration.**
- **Always follow the installation and use instructions provided by the manufacturer of the child restraint.**

YN ENG 3.QXP 4/16/2012 9:59 AM Page 35

Child seat restraint suitability for vehicle ISOFIX positions - For Europe

Mass Group	Size Class	Fixture	vehicle ISOFIX positions			
			Front Passenger	Rear Outboard (Driver side)	Rear Outboard (Passenger side)	Rear Center
Carrycot	F	ISO/L1	-	X	X	-
	G	ISO/L2	-	X	X	-
0 : UP to 10kg	E	ISO/R1	-	IUF	IUF	-
0+ : UP to 13kg	E	ISO/R1	-	IUF	IUF	-
	D	ISO/R2	-	IUF	IUF	-
	C	ISO/R3	-	IUF	IUF	-
I : 9 to 18kg	D	ISO/R2	-	IUF	IUF	-
	C	ISO/R3	-	IUF	IUF	-
	B	ISO/F2	-	IUF	IUF	-
	B1	ISO/F2X	-	IUF	IUF	-
	A	ISO/F3	-	IUF	IUF	-

IUF = Suitable for ISOFIX forward child restraints systems of universal category approved for use in the mass group.

IL = Suitable for particular ISOFIX child restraints systems (CRS) given in the attached list. These ISOFIX CRS are those of the "specific vehicle", "restricted" or "semi-universal" categories.

X = ISOFIX position not suitable for ISOFIX child restraint system in this mass group and/or this size class.

* Both ISO/R2 and ISO/R3 are able to be set up only at the foremost position of the passenger seat.

* ISOFIX child restraint system size classes and fixtures

A - ISO/F3: Full-Height Forward-Facing toddler CRS (height 720mm)

B - ISO/F2: Reduced-Height Forward-Facing toddler CRS (height 650mm)

B1 - ISO/F2X: Reduced-Height Second Version Back Surface Shape Forward-Facing toddler CRS (height 650mm)

C - ISO/R3: Full-Size Rearward-Facing toddler CRS

D - ISO/R2: Reduced-Size Rearward-Facing toddler CRS

E - ISO/R1: Infant-Size Rearward-Facing CRS

F - ISO/L1: Left Lateral Facing position CRS (carry-cot)

G - ISO/L2: Right Lateral Facing position CRS (carry-cot)

YN ENG 3.QXP 4/16/2012 9:59 AM Page 36

Recommended child restraint systems – For Europe

Mass Group	Name	Manufacturer	Type of Fixation	ECE-R44 Approval No.
Group 0-1 (0-18kg)	FAIR G0/1 TYPE “S”	FAIR S.r.l	rearward facing with vehicle specific ISOFIX platform type “G”	E4 04443718
Group 1 (9-18kg)	FAIR G0/1 TYPE “S”	FAIR S.r.l	forward facing with vehicle specific ISOFIX platform type “I”	E4 04443718

CRS Manufacturer information

FAIR S.r.l http://www.fairbimbofix.com

❉ The rear seat has to be adjusted to the rearmost position when the CRS is fitted into the car.

❉ Please ask dealer to buy FAIR CRS
- FAIR G0/1 TYPE “S” CRS : E894566099
- RWF ISOFIX PLATFORM TYPE “G” : E894566099A
- FWF ISOFIX PLATFORM TYPE “I” : E894566099B

YN ENG 3.QXP 4/16/2012 9:59 AM Page 37

AIR BAG - SUPPLEMENTAL RESTRAINT SYSTEM (IF EQUIPPED)

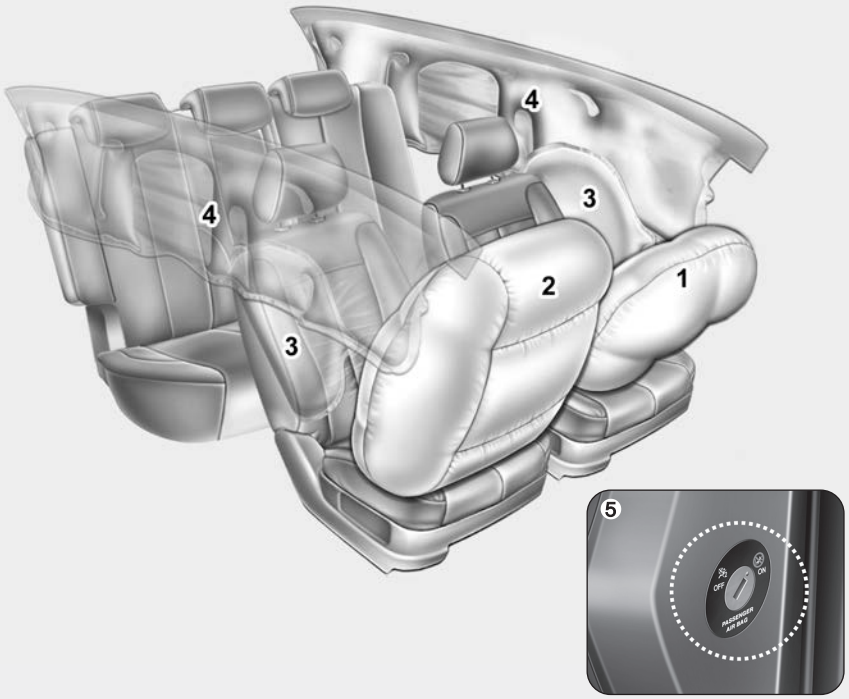

* The actual air bags in the vehicle may differ from the illustration.

OYN032042/OYN039026

(1) Driver's front air bag
(2) Passenger's front air bag*
(3) Side impact air bag*
(4) Curtain air bag*
(5) Front passenger's air bag ON/OFF switch*

* : if equipped

⚠ WARNING

Even in vehicles with air bags, you and your passengers must always wear the safety belts provided in order to minimize the risk and severity of injury in the event of a collision or rollover.

YN ENG 3.QXP 4/16/2012 9:59 AM Page 38

How does the air bag system operate

- Air bags are activated (able to inflate if necessary) only when the ignition switch is turned to the ON or START position.
- Air bags inflate instantly in the event of serious frontal or side collision (if equipped with side impact air bag or curtain air bag) in order to help protect the occupants from serious physical injury.
- There is no single speed at which the air bags will inflate.

  Generally, air bags are designed to inflate based upon the severity of a collision and its direction. These two factors determine whether the sensors produce an electronic deployment/ inflation signal.
- Air bag deployment depends on a number of factors including vehicle speed, angles of impact and the density and stiffness of the vehicles or objects which your vehicle hits in the collision. The determining, factors are not limited to those mentioned above.
- The front air bags will completely inflate and deflate in an instant.

  It is virtually impossible for you to see the air bags inflate during an accident. It is much more likely that you will simply see the deflated air bags hanging out of their storage compartments after the collision.
- In order to help provide protection in a severe collision, the air bags must inflate rapidly. The speed of air bag inflation is a consequence of extremely short time in which a collision occurs and the need to get the air bag between the occupant and the vehicle structures before the occupant impacts those structures. This speed of inflation reduces the risk of serious or life-threatening injuries in a severe collision and is thus a necessary part of air bag design.

  However, air bag inflation can also cause injuries which can include facial abrasions, bruises and broken bones because the inflation speed also causes the air bags to expand with a great deal of force.
- **There are even circumstances under which contact with the steering wheel air bag can cause fatal injuries, especially if the occupant is positioned excessively close to the steering wheel.**

⚠ WARNING

- **To avoid severe personal injury or death caused by deploying air bags in a collision, the driver should sit as far back from the steering wheel air bag as possible (at least 250 mm (10 inches) away). The front passenger should always move their seat as far back as possible and sit back in their seat.**
- **Air bag inflates instantly in an event of a collision, passengers may be injured by the air bag expansion force if they are not in a proper position.**
- **Air bag inflation may cause injuries including facial or bodily abrasions, injuries from broken glasses or burns.**

YN ENG 3.QXP 4/16/2012 9:59 AM Page 39

Noise and smoke

When the air bags inflate, they make a loud noise and they leave smoke and powder in the air inside of the vehicle. This is normal and is a result of the ignition of the air bag inflator. After the air bag inflates, you may feel substantial discomfort in breathing due to the contact of your chest with both the seat belt and the air bag, as well as from breathing the smoke and powder. **Open your doors and/or windows as soon as possible after impact in order to reduce discomfort and prevent prolonged exposure to the smoke and powder.**

Though smoke and powder are nontoxic, it may cause irritation to the skin (eyes, nose and throat, etc.). If this is the case, wash and rinse with cold water immediately and consult the doctor if the symptom persists.

⚠ WARNING

When the air bags deploy, the air bag related parts in the steering wheel and/or instrument panel and/or in both sides of the roof rails above the front and rear doors are very hot. To prevent injury, do not touch the air bag storage areas internal components immediately after an air bag has inflated.



1JBH3051

Installing a child restraint on a front passenger's seat is forbidden when the air bag is active

Never place a rear-facing child restraint in the front passenger's seat. If the air bag deploys, it would impact the rear-facing child restraint, causing serious or fatal injury.

In addition, do not place front-facing child restraints in the front passenger's seat either. If the front passenger air bag inflates, it would cause serious or fatal injuries to the child.

If your vehicle is equipped with the passenger's front air bag ON/OFF switch, you can activate or deactivate the front passenger's air bag when necessary.

For more details, please refer to 3-47 page.

YN ENG 3.QXP 4/16/2012 9:59 AM Page 40

⚠ WARNING

- **Extreme Hazard! Do not use a rearward facing child restraint on a seat protected by an air bag in front of it!**
- **Never put a child restraint in the front passenger's seat. If the front passenger air bag inflates, it would cause serious or fatal injuries.**
- **When children are seated in the rear outboard seats of vehicle equipped with side and/or curtain air bags, be sure to install the child restraint system as far away from the door side as possible, and securely lock the child restraint system in position.**

  Inflation of side and/or curtain air bags could cause serious injury or death to an infant or child.



W7-147

Air bag warning and indicator

Air bag warning light

The purpose of the air bag warning light in your instrument panel is to alert you of a potential problem with your air bag - Supplemental Restraint System (SRS).

When the ignition switch is turned ON, the warning light should illuminate for approximately 6 seconds, then go off.

Have the system checked if:

- The light does not turn on briefly when you turn the ignition ON.
- The light stays on after illuminating for approximately 6 seconds.
- The light comes on while the vehicle is in motion.
- The light blinks when the ignition switch is in ON position.

YN ENG 3.QXP 4/16/2012 9:59 AM Page 41



OYN039028

Passenger's front air bag ON indicator (if equipped)

The passenger's front air bag ON indicator illuminates for approximately 4 seconds after the ignition switch is turned to the ON position.

The passenger's front air bag ON indicator also comes on when the passenger's front air bag ON/OFF switch is set to the ON position and goes off after approximately 60 seconds.



OYN039036

Passenger's front air bag OFF indicator (if equipped)

The passenger's front air bag OFF indicator illuminates for about 4 seconds after the ignition switch is turned to the ON position.

The passenger's front air bag OFF indicator also comes on when the passenger's front air bag ON/OFF switch is set to the OFF position and goes off when the passenger's front air bag ON/OFF switch is set to the ON position.

⚠ CAUTION

If the passenger's front air bag ON/OFF switch malfunctions, the passenger's front air bag OFF indicator will not illuminate (The passenger's front air bag ON indicator comes on and goes off after approximately 60 seconds) and the passenger's front air bag will inflate in a frontal impact even if the passenger's front air bag ON/OFF switch is set to the OFF position.

If this occurs, we recommend that the system be inspected by an authorized Kia dealer.

YN ENG 3.QXP 4/16/2012 9:59 AM Page 42

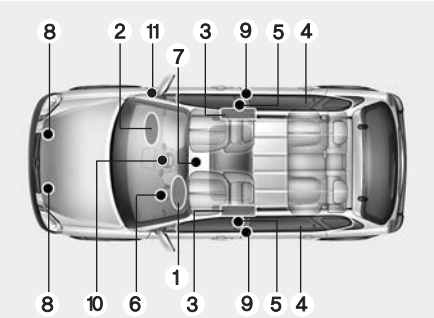

OAM039049L/Q

SRS components and functions

The SRS consists of the following components:

1. Driver's front air bag module
2. Passenger's front air bag module*
3. Side impact air bag modules*
4. Curtain air bag modules*
5. Retractor pre-tensioner assemblies*
6. Air bag warning light
7. SRS control module (SRSCM)
8. Front impact sensors
9. Side impact sensors*
10. Passenger's front air bag ON/OFF indicator (front passenger's seat only)*
11. Passenger's front air bag ON/OFF switch*

* if equipped

The SRSCM continually monitors all SRS components while the ignition switch is ON to determine if a crash impact is severe enough to require air bag deployment or pre-tensioner seat belt deployment.

The SRS air bag warning light on the instrument panel will illuminate for about 6 seconds after the ignition switch is turned to the ON position, after which the air bag warning light should go out.

⚠ WARNING

If any of the following conditions occurs, this indicates a malfunction of the SRS. We recommend that the system be inspected by an authorized Kia dealer.

- **The light does not turn on briefly when you turn the ignition ON.**
- **The light stays on after illuminating for approximately 6 seconds.**
- **The light comes on while the vehicle is in motion.**
- **The light blinks when the ignition switch is in ON position.**

YN ENG 3.QXP 4/16/2012 9:59 AM Page 43

Driver's front air bag (1)



B240B01L

The air bag modules are located both in the center of the steering wheel and in the front passenger's panel above the glove box. When the SRSCM detects a sufficiently severe impact to the front of the vehicle, it will automatically deploy the front air bags.

Driver's front air bag (2)

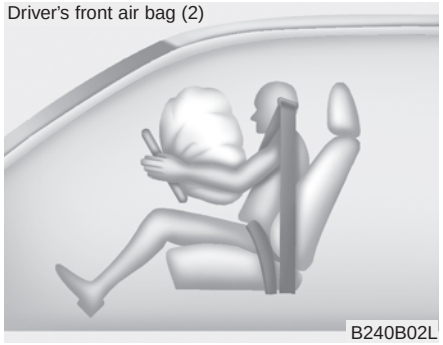

B240B02L

Upon deployment, tear seams molded directly into the pad covers will separate under pressure from the expansion of the air bags. Further opening of the covers then allows full inflation of the air bags.

Driver's front air bag (3)

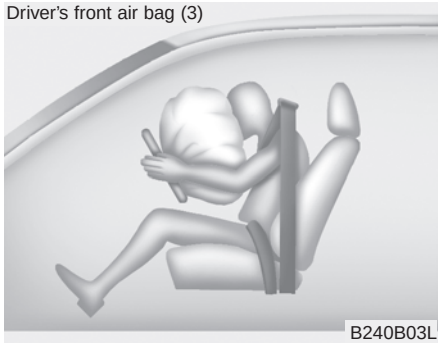

B240B03L

A fully inflated air bag, in combination with a properly worn seat belt, slows the driver's or the passenger's forward motion, reducing the risk of head and chest injury.

After complete inflation, the air bag immediately starts deflating, enabling the driver to maintain forward visibility and the ability to steer or operate other controls.

YN ENG 3.QXP 4/16/2012 9:59 AM Page 44

Passenger's front air bag



B240B05L

⚠ WARNING

- **Do not install or place any accessories (drink holder, cassette holder, sticker, etc.) on the front passenger's panel above the glove box in a vehicle with a passenger's air bag. Such objects may become dangerous projectiles and cause injury if the passenger's air bag inflates.**
- **When installing a container of liquid air freshener inside the vehicle, do not place it near the instrument cluster nor on the instrument panel surface.**

  It may become a dangerous projectile and cause injury if the passenger's air bag inflates.

⚠ WARNING

- **If an air bag deploys, there may be a loud noise followed by a fine dust released in the vehicle. These conditions are normal and are not hazardous - the air bags are packed in this fine powder. The dust generated during air bag deployment may cause skin or eye irritation as well as aggravate asthma for some persons. Always wash all exposed skin areas thoroughly with lukewarm water and a mild soap after an accident in which the air bags were deployed.**
- **The SRS can function only when the ignition switch is in the ON position.**
- **Before you replace a fuse or disconnect a battery terminal, turn the ignition switch to the LOCK position and remove the ignition key. Never remove or replace the air bag related fuse(s) when the ignition switch is in the ON position. Failure to heed this warning will cause the SRS air bag warning light to illuminate.**

Driver's front air bag



OYN039024

Passenger's front air bag



OYN039025

Driver's and passenger's front air bag (if equipped)

Your vehicle is equipped with a Supplemental Restraint (Air Bag) System and lap/shoulder belts at both the driver and passenger seating positions.

YN ENG 3.QXP 4/16/2012 9:59 AM Page 45

The indications of the system's presence are the letters "AIR BAG" embossed on the air bag pad cover in the steering wheel and the passenger's side front panel pad above the glove box.

The SRS consists of air bags installed under the pad covers in the center of the steering wheel and the passenger's side front panel above the glove box.

The purpose of the SRS is to provide the vehicle's driver and/or the front passenger with additional protection than that offered by the seat belt system alone in case of a frontal impact of sufficient severity.

⚠ WARNING

Always use seat belts and child restraints – every trip, every time, everyone! Air bags inflate with considerable force and in the blink of an eye. Seat belts help keep occupants in proper position to obtain maximum benefit from the air bag. Even with air bags, improperly and unbelted occupants can be severely injured when the air bag inflates. Always follow the precautions about seat belts, air bags and occupant safety contained in this manual.

To reduce the chance of serious or fatal injuries and receive the maximum safety benefit from your restraint system:

- **Never place a child in any child or booster seat in the front seat.**
- **ABC – Always Buckle Children in the back seat. It is the safest place for children of any age to ride.**
- **Front and side impact air bags can injure occupants improperly positioned in the front seats.**

(Continued)

(Continued)

- **Move your seat as far back as practical from the front air bags, while still maintaining control of the vehicle.**
- **You and your passengers should never sit or lean unnecessarily close to the air bags. Improperly positioned drivers and passengers can be severely injured by inflating air bags.**
- **Never lean against the door or center console – always sit in an upright position.**
- **Do not allow a passenger to ride in the front seat when the passenger's front air bag OFF indicator is illuminated, because the air bag will not deploy in the event of a moderate or severe frontal crash.**

(Continued)

YN ENG 3.QXP 4/16/2012 9:59 AM Page 46

(Continued)

- **No objects should be placed over or near the air bag modules on the steering wheel, instrument panel, and the front passenger's panel above the glove box, because any such object could cause harm if the vehicle is in a crash severe enough to cause the air bags to deploy.**
- **Do not tamper with or disconnect SRS wiring or other components of the SRS system. Doing so could result in injury, due to accidental deployment of the air bags or by rendering the SRS inoperative.**
- **If the SRS air bag warning light remains illuminated or blinks while the vehicle is being driven, we recommend that the system be inspected by an authorized Kia dealer.**

(Continued)

(Continued)

- **Air bags can only be used once – we recommend that the system be replaced by Kia dealer.**
- **The SRS is designed to deploy the front air bags only when an impact is sufficiently severe and when the impact angle is less than 30° from the forward longitudinal axis of the vehicle. Additionally, the air bags will only deploy once. Seat belts must be worn at all times.**
- **Front air bags are not intended to deploy in side-impact, rear-impact or rollover crashes. In addition, front air bags will not deploy in frontal crashes below the deployment threshold.**
- **A child restraint system must never be placed in the front seat. The infant or child could be severely injured or killed by an air bag deployment in case of an accident.**

(Continued)

(Continued)

- **Children age 12 and under must always be properly restrained in the rear seat. Never allow children to ride in the front passenger seat. If a child over 12 must be seated in the front seat, he or she must be properly belted and the seat should be moved as far back as possible.**
- **For maximum safety protection in all types of crashes, all occupants including the driver should always wear their seat belts whether or not an air bag is also provided at their seating position to minimize the risk of severe injury or death in the event of a crash. Do not sit or lean unnecessarily close to the air bag while the vehicle is in motion.**

(Continued)

YN ENG 3.QXP 4/16/2012 10:00 AM Page 47

(Continued)

- **Sitting improperly or out of position can result in serious or fatal injury in a crash. All occupants should sit upright with the seat back in an upright position, centered on the seat cushion with their seat belt on, legs comfortably extended and their feet on the floor until the vehicle is parked and the ignition key is removed.**
- **The SRS air bag system must deploy very rapidly to provide protection in a crash. If an occupant is out of position because of not wearing a seat belt, the air bag may forcefully contact the occupant causing serious or fatal injuries.**

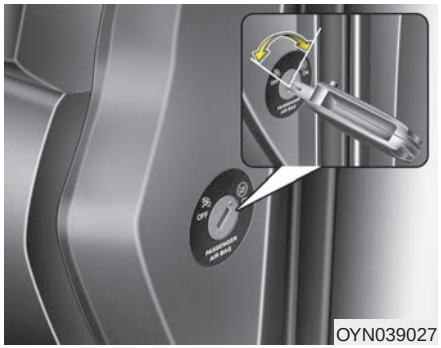

Passenger's front air bag ON/OFF switch (if equipped)

The passenger's front air bag can be deactivated by the passenger's front air bag ON/OFF switch if a child restraint is installed on the front passenger's seat or if the front passenger's seat is unoccupied by a person.

To ensure the safety of your child, the passenger's front air bag must be deactivated when it should be necessary to install a rearward facing child seat on the front passenger seat in exceptional circumstances.



To deactivate or reactivate the passenger's front air bag:

To deactivate the passenger's front air bag, insert the master key into the passenger's front air bag ON/OFF switch and turn it to the OFF position. The passenger's front air bag OFF indicator ( ) will illuminate and stay on until the passenger's front air bag is reactivated.

To reactivate the passenger's front air bag, insert the master key into the passenger's front air bag ON/OFF switch and turn it to the ON position. The passenger's front air bag OFF indicator will go out and the passenger's front air bag ON indicator ( ) will illuminate for approximately 60 seconds.

YN ENG 3.QXP 4/16/2012 10:00 AM Page 48

⚠ WARNING

On some models, the front air bag ON/OFF switch could turn by using a similar small rigid device. Always check the status of the front air bag ON/OFF switch and passenger's front air bag ON/OFF indicator.

✻ NOTICE

- **When the passenger's front air bag ON/OFF switch is set to the ON position, the passenger's front air bag is activated and child or infant seat should not be installed on the front passenger seat.**
- **When the passenger's front air bag ON/OFF switch is set to the OFF position, the passenger's front air bag is deactivated.**

⚠ CAUTION

- ***If the passenger's front air bag ON/OFF switch is not working properly, the air bag warning light (🪑) on the instrument panel will illuminate.***

  And, the passenger's front air bag OFF indicator (🪑2) will not illuminate (The passenger's front air bag ON indicator comes on and goes off after approximately 60 seconds), the SRS Control Module reactivate the passenger's front air bag and the passenger's front air bag will inflate in frontal impact crashes even if the passenger's front air bag ON/OFF switch is set to the OFF position.

  If this occurs, we recommend that the system be inspected by an authorized Kia dealer.

(Continued)

(Continued)

- ***If the SRS air bag warning light blinks or does not illuminate when the ignition switch is turned to the ON position, or if it illuminates while the vehicle is being driven, we recommend that the system be inspected by an authorized Kia dealer.***

YN ENG 3.QXP 4/16/2012 10:00 AM Page 49

⚠ WARNING

- **The driver is responsible for the proper position of the passenger's front air bag ON/OFF switch.**
- **Deactivate the passenger's front air bag only when the ignition switch is switched off, or the malfunction may occur in the SRS Control Module.**
  And there may be a danger that the driver's and/or front passenger's and/or side and curtain air bag may fail to trigger, or not trigger correctly during a collision.
- **Never install a rearward facing child seat on the front passenger's seat unless the passenger's front air bag has been deactivated. The infant or child could be severely injured or killed by an air bag deployment in case of an accident.**

(Continued)

(Continued)

- **Even though your vehicle is equipped with the passenger's front air bag ON/OFF switch, do not install a child restraint system in the front passenger's seat. A child restraint system must never be placed in the front seat. Children who are too large for child restraint systems should always occupy the rear seat and use the available lap/shoulder belts. Children are afforded the most safety in the event of an accident when they are restrained by a proper restraint system in the rear seat.**
- **As soon as the child seat is no longer needed on the front passenger's seat, reactivate the front passenger's air bag.**

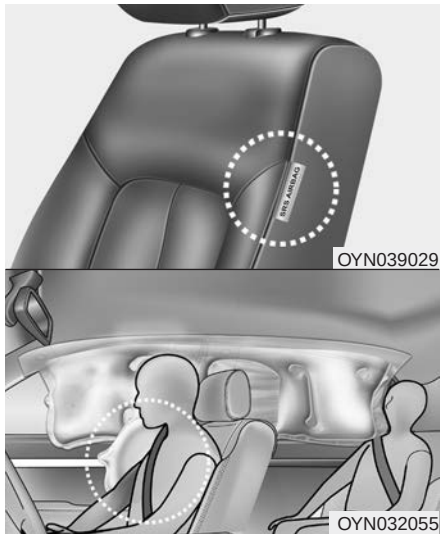

Side impact air bag (if equipped)

Your vehicle is equipped with a side impact air bag in each front seat. The purpose of the air bag is to provide the vehicle's driver and/or the front passenger with additional protection than that offered by the seat belt alone.

The side impact air bags are designed to deploy only during certain side-impact collisions, depending on the crash severity, angle, speed and point of impact. The side impact air bags are not designed to deploy in all side impact situations.

⚠ WARNING

- **Do not allow the passengers to lean their heads or bodies onto doors, put their arms on the doors, stretch their arms out of the window, or place objects between the doors and passengers when they are seated on seats equipped with side and/or curtain air bags.**
- **The side impact air bag is supplemental to the driver's and the passenger's seat belt systems and is not a substitute for them. Therefore your seat belts must be worn at all times while the vehicle is in motion. The air bags deploy only in certain side impact conditions severe enough to cause significant injury to the vehicle occupants.**
- **For best protection from the side impact air bag system and to avoid being injured by the deploying side impact air bag, both front seat occupants should sit in an upright position with the seat belt properly fastened. The driver's hands should be placed on the steering wheel at the 9:00 and 3:00 positions. The passenger's arms and hands should be placed on their laps.**

(Continued)

(Continued)

- **Do not use any accessory seat covers.**
- **Use of seat covers could reduce or prevent the effectiveness of the system.**
- **Do not install any accessories on the side or near the side impact air bag.**
- **Do not place any objects over the air bag or between the air bag and yourself.**
- **Do not place any objects (an umbrella, bag, etc.) between the front door and the front seat. Such objects may become dangerous projectiles and cause injury if the supplemental side impact air bag inflates.**
- **To prevent unexpected deployment of the side impact air bag that may result in personal injury, avoid impact to the side impact sensor when the ignition switch is on.**
- **If seat or seat cover is damaged, we recommend that the system be serviced by an authorized Kia dealer.**

YN ENG 3.QXP 4/16/2012 10:00 AM Page 51

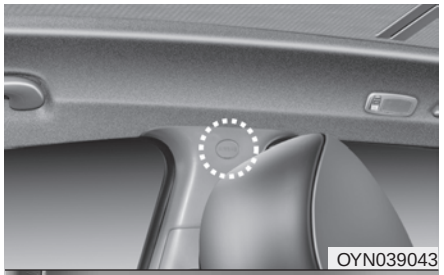
OYN039043


OED036098

Curtain air bag (if equipped)

Curtain air bags are located along both sides of the roof rails above the front and rear doors.

They are designed to help protect the heads of the front seat occupants and the rear outboard seat occupants in certain side impact collisions.

The curtain air bags are designed to deploy only during certain side impact collisions, depending on the crash severity, angle, speed and impact. The curtain air bags are not designed to deploy in all side impact situations, collisions from the front or rear of the vehicle or in most rollover situations.

⚠ WARNING

- **In order for side impact and curtain air bags to provide the best protection, both front seat occupants and both outboard rear occupants should sit in an upright position with the seat belts properly fastened.**

  Importantly, children should sit in a proper child restraint system in the rear seat.

(Continued)

(Continued)

- **When children are seated in the rear outboard seats, they must be seated in the proper child restraint system. Make sure to put the child restraint system as far away from the door side as possible, and secure the child restraint system in a locked position.**
- **Do not allow the passengers to lean their heads or bodies onto doors, put their arms on the doors, stretch their arms out of the window, or place objects between the doors and passengers when they are seated on seats equipped with side and/or curtain air bags.**
- **Never try to open or repair any components of the side curtain air bag system. We recommend that the system be serviced by an authorized Kia dealer.**

Failure to follow the above mentioned instructions can result in injury or death to the vehicle occupants in an accident.

Why didn't my air bag go off in a collision? (Inflation and non-inflation conditions of the air bag)

There are many types of accidents in which the air bag would not be expected to provide additional protection.

These include rear impacts, second or third collisions in multiple impact accidents, as well as low speed impacts.

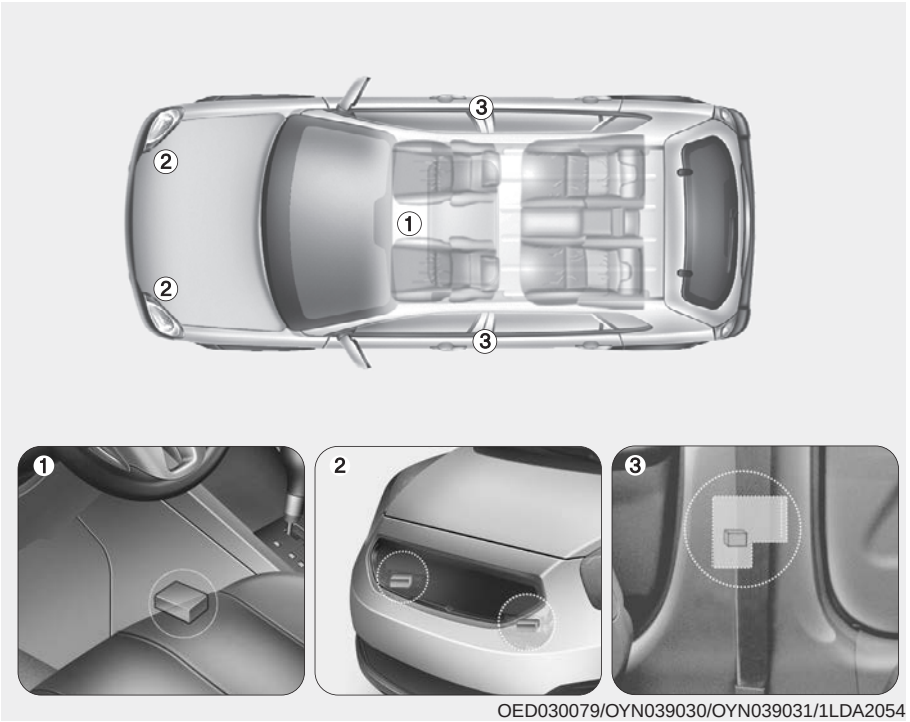

OED030079/OYN039030/OYN039031/1LDA2054

Air bag collision sensors

(1) SRS control module
(2) Front impact sensor
(3) Side impact sensor (if equipped)

YN ENG 3.QXP 4/16/2012 10:00 AM Page 53

⚠ WARNING

- **Do not hit or allow any objects to impact the locations where air bags or sensors are installed.**

  This may cause unexpected air bag deployment, which could result in serious personal injury or death.
- **If the installation location or angle of the sensors is altered in any way, the air bags may deploy when they should not or they may not deploy when they should, causing severe injury or death.**

  Therefore, do not try to perform maintenance on or around the air bag sensors. We recommend that the system be serviced by an authorized Kia dealer.

(Continued)

(Continued)

- **Problems may arise if the sensor installation angles are changed due to the deformation of the front bumper, body or B pillar where side collision sensors are installed. We recommend that the system be serviced by an authorized Kia dealer.**
- **Your vehicle has been designed to absorb impact and deploy the air bag(s) in certain collisions. Installing aftermarket bumper guards or replacing a bumper with non-genuine parts may adversely affect your vehicles collision and air bag deployment performance.**



Air bag inflation conditions

Front air bags

Front air bags are designed to inflate in a frontal collision depending on the intensity, speed or angles of impact of the front collision.

YN ENG 3.QXP 4/16/2012 10:00 AM Page 54

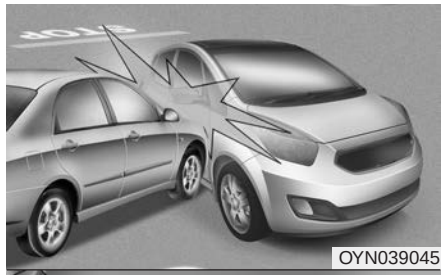
OYN039045

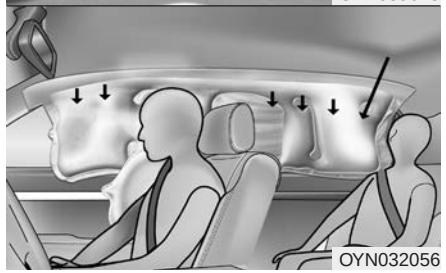
OYN032056

Side air bags (if equipped)

Side air bags (side impact and/or curtain air bags) are designed to inflate when an impact is detected by side collision sensors depending on the strength, speed or angles of impact resulting from a side impact collision.

Although the front air bags (driver's and front passenger's air bags) are designed to inflate only in frontal collisions, they also may inflate in other types of collisions if the front impact sensors detect a sufficient impact. Side air bags (side impact and/or curtain air bags) are designed to inflate only in side impact collisions, but they may inflate in other collisions if the side impact sensors detect a sufficient impact.

If the vehicle chassis is impacted by bumps or objects on unimproved roads or sidewalks, air bags may deploy. Drive carefully on unimproved roads or on surfaces not designed for vehicle traffic to prevent unintended air bag deployment.


OED036099

Air bag non-inflation conditions

- In certain low-speed collisions the air bags may not deploy. The air bags are designed not to deploy in such cases because they may not provide benefits beyond the protection of the seat belts in such collisions.

YN ENG 3.QXP 4/16/2012 10:00 AM Page 55

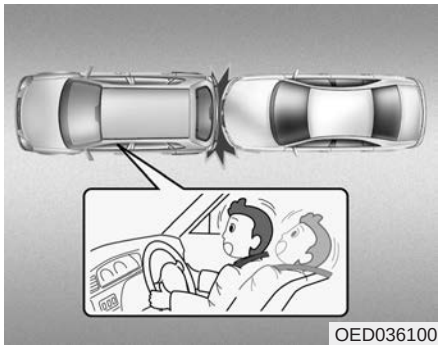
OED036100

- Frontal air bags are not designed to inflate in rear collisions, because occupants are moved backward by the force of the impact. In this case, inflated air bags would not be able to provide any additional benefit.


OYN039046

- Front air bags may not inflate in side impact collisions, because occupants move to the direction of the collision, and thus in side impacts, frontal air bag deployment would not provide additional occupant protection.

  However, side impact or curtain air bags may inflate depending on the intensity, vehicle speed and angles of impact.

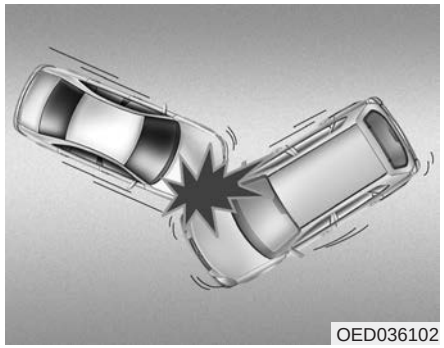
OED036102

- In a slant or angled collision, the force of impact may direct the occupants in a direction where the air bags would not be able to provide any additional benefit, and thus the sensors may not deploy any air bags.

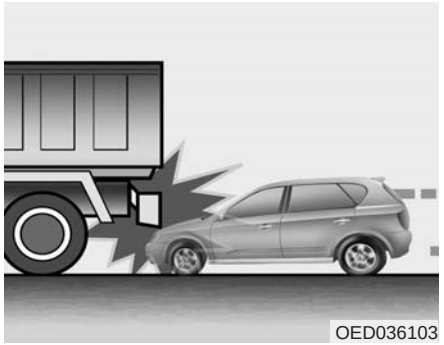

OED036103

- Just before impact, drivers often brake heavily. Such heavy braking lowers the front portion of the vehicle causing it to “ride” under a vehicle with a higher ground clearance. Air bags may not inflate in this "under-ride" situation because deceleration forces that are detected by sensors may be significantly reduced by such “under-ride” collisions.

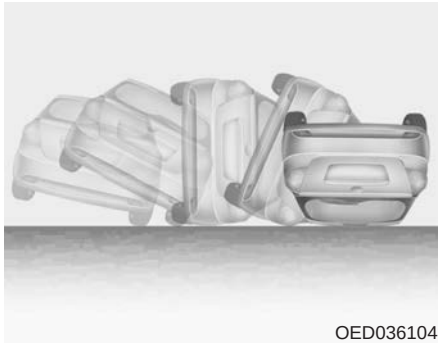

OED036104

- Air bags may not inflate in rollover accidents because air bag deployment would not provide protection to the occupants.

  However, side and/or curtain air bags may inflate when the vehicle is rolled over by a side impact collision, if the vehicle is equipped with side impact air bags and curtain air bags.

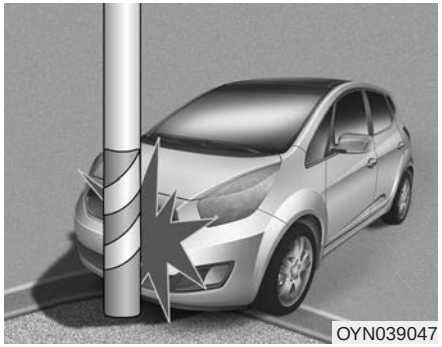

OYN039047

- Air bags may not inflate if the vehicle collides with objects such as utility poles or trees, where the point of impact is concentrated to one area and the full force of the impact is not delivered to the sensors.

YN ENG 3.QXP 4/16/2012 10:00 AM Page 57

SRS Care

The SRS is virtually maintenance-free and so there are no parts you can safely service by yourself. If the SRS air bag warning light does not illuminate, or continuously remains on, we recommend that the system be inspected by an authorized Kia dealer.

⚠ WARNING

- **Modification to SRS components or wiring, including the addition of any kind of badges to the pad covers or modifications to the body structure, can adversely affect SRS performance and lead to possible injury.**
- **For cleaning the air bag pad covers, use only a soft, dry cloth or one which has been moistened with plain water. Solvents or cleaners could adversely affect the air bag covers and proper deployment of the system.**
- **No objects should be placed over or near the air bag modules on the steering wheel, instrument panel, and the front passenger's panel above the glove box, because any such object could cause harm if the vehicle is in a crash severe enough to cause the air bags to inflate.**

(Continued)

(Continued)

- **If the air bags inflate, we recommend that the system be replaced by an authorized Kia dealer.**
- **Do not tamper with or disconnect SRS wiring, or other components of the SRS system. Doing so could result in injury, due to accidental inflation of the air bags or by rendering the SRS inoperative.**
- **If components of the air bag system must be discarded, or if the vehicle must be scrapped, certain safety precautions must be observed. An authorized Kia dealer knows these precautions and can give you the necessary information. Failure to follow these precautions and procedures could increase the risk of personal injury.**
- **If your car was flooded and has soaked carpeting or water on flooring, you shouldn't try to start the engine; we recommend that you contact an authorized Kia dealer.**

YN ENG 3.QXP 4/16/2012 10:00 AM Page 58

Additional safety precautions

- **Never let passengers ride in the cargo area or on top of a folded-down back seat.** All occupants should sit upright, fully back in their seats with their seat belts on and their feet on the floor.
- **Passengers should not move out of or change seats while the vehicle is moving.** A passenger who is not wearing a seat belt during a crash or emergency stop can be thrown against the inside of the vehicle, against other occupants, or out of the vehicle.
- **Each seat belt is designed to restrain one occupant.** If more than one person uses the same seat belt, they could be seriously injured or killed in a collision.
- **Do not use any accessories on seat belts.** Devices claiming to improve occupant comfort or reposition the seat belt can reduce the protection provided by the seat belt and increase the chance of serious injury in a crash.
- **Passengers should not place hard or sharp objects between themselves and the air bags.** Carrying hard or sharp objects on your lap or in your mouth can result in injuries if an air bag inflates.
- **Keep occupants away from the air bag covers.** All occupants should sit upright, fully back in their seats with their seat belts on and their feet on the floor. If occupants are too close to the air bag covers, they could be injured if the air bags inflate.
- **Do not attach or place objects on or near the air bag covers.** Any object attached to or placed on the front or side impact air bag covers could interfere with the proper operation of the air bags.
- **Do not modify the front seats.** Modification of the front seats could interfere with the operation of the supplemental restraint system sensing components or side impact air bags.
- **Do not place items under the front seats.** Placing items under the front seats could interfere with the operation of the supplemental restraint system sensing components and wiring harnesses.
- **Never hold an infant or child on your lap.** The infant or child could be seriously injured or killed in the event of a crash. All infants and children should be properly restrained in appropriate child safety seats or seat belts in the rear seat.

⚠ WARNING

- **Sitting improperly or out of position can cause occupants to be shifted too close to a deploying air bag, strike the interior structure or be thrown from the vehicle resulting in serious injury or death.**
- **Always sit upright with the seatback in an upright position, centered on the seat cushion with your seat belt on, legs comfortably extended and your feet on the floor.**

Adding equipment to or modifying your air bag-equipped vehicle

If you modify your vehicle by changing your vehicle's frame, bumper system, front end or side sheet metal or ride height, this may affect the operation of your vehicle's air bag system.

YN ENG 3.QXP 4/16/2012 10:00 AM Page 59

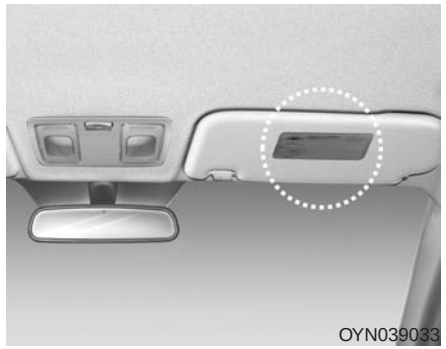

Air bag warning label (if equipped)

Air bag warning label is attached to alert the passengers of potential risk of the air bag system.

Note that these government warnings focus on the risk to children, we also want you to be aware of the risks which adults are exposed to that have been described in previous pages.

YN ENG 4(~99).QXP 4/16/2012 10:15 AM Page 1

Keys / 4-2
Remote keyless entry / 4-5
Smart key / 4-8
Theft-alarm system / 4-11
Door locks / 4-13
Tailgate / 4-17
Windows / 4-19
Hood / 4-24
Fuel filler lid / 4-26
Panorama sunroof / 4-29

Features of your vehicle 4

Steering wheel / 4-33
Mirrors / 4-35
Instrument cluster / 4-40
Rear parking assist system / 4-57
Rearview camera / 4-60
Hazard warning flasher / 4-60
Lighting / 4-61
Wipers and washers / 4-67
Interior light / 4-70
Defroster / 4-71
Manual climate control system / 4-72
Automatic climate control system / 4-81
Windshield defrosting and defogging / 4-89
Storage compartment / 4-91
Interior features / 4-93
Audio system / 4-100

YN ENG 4(~99).QXP 4/16/2012 10:15 AM Page 2

KEYS

Record your key number



The key code number is stamped on the bar code tag attached to the key set. Should you lose your keys, we recommend that you contact an authorized Kia dealer. Remove the bar code tag and store it in a safe place. Also, record the code number and keep it in a safe place (not in the vehicle).

Key operations

■ Type A



OYN049001

■ Type B

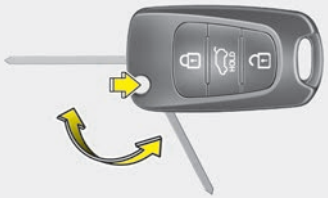

OAM049096L

■ Type C



OXM049200L

- Used to start the engine.
- Used to lock and unlock the doors.

Type B

To unfold the key, press the release button then the key will unfold automatically.

To fold the key, fold the key manually while pressing the release button.

⚠ CAUTION

Do not fold the key without pressing the release button. This may damage the key.

Type C

To remove the mechanical key, press and hold the release button and remove the mechanical key.

To reinstall the mechanical key, put the key into the hole and push it until a click sound is heard.

YN ENG 4(~99).QXP 4/16/2012 10:15 AM Page 3

⚠ WARNING - Ignition key

Leaving children unattended in a vehicle with the ignition key is dangerous even if the key is not in the ignition switch. Children copy adults and they could place the key in the ignition switch. The ignition key would enable children to operate power windows or other controls, or even make the vehicle move, which could result in serious bodily injury or even death. Never leave the keys in your vehicle with unsupervised children.

⚠ WARNING

We recommend that you use parts for replacement from an authorized Kia dealer. If an aftermarket key is used, the ignition switch may not return to ON after START. If this happens, the starter will continue to operate causing damage to the starter motor and possible fire due to excessive current in the wiring.

Immobilizer system (if equipped)

Your vehicle may be equipped with an electronic engine immobilizer system to reduce the risk of unauthorized vehicle use.

Your immobilizer system is comprised of a small transponder in the ignition key and electronic devices inside the vehicle.

With the immobilizer system, whenever you insert your ignition key into the ignition switch and turn it to ON, it checks and determines and verifies if the ignition key is valid or not.

If the key is determined to be valid, the engine will start.

If the key is determined to be invalid, the engine will not start.

To deactivate the immobilizer system:

Insert the ignition key into the key cylinder and turn it to the ON position.

To activate the immobilizer system:

Turn the ignition key to the OFF position. The immobilizer system activates automatically. Without a valid ignition key for your vehicle, the engine will not start.

⚠ WARNING

In order to prevent theft of your vehicle, do not leave spare keys anywhere in your vehicle. Your immobilizer password is a customer unique password and should be kept confidential. Do not leave this number anywhere in your vehicle.

YN ENG 4(~99).QXP 4/16/2012 10:15 AM Page 4

✻ NOTICE

When starting the engine, do not use the key with other immobilizer keys around. Otherwise the engine may not start or may stop soon after it starts. Keep each key separately in order to avoid a starting malfunction.

⚠ CAUTION

Do not put metal accessories near the ignition switch. Metal accessories may interrupt the transponder signal and may prevent the engine from being started.

✻ NOTICE

If you need additional keys or lose your keys, we recommend that you consult with an authorized Kia dealer.

⚠ CAUTION

The transponder in your ignition key is an important part of the immobilizer system. It is designed to give years of trouble-free service, however you should avoid exposure to moisture, static electricity and rough handling. Immobilizer system malfunction could occur.

⚠ CAUTION

Do not change, alter or adjust the immobilizer system because it could cause the immobilizer system to malfunction. We recommend that the system be serviced by an authorized Kia dealer.

Malfunctions caused by improper alterations, adjustments or modifications to the immobilizer system are not covered by your vehicle manufacturer warranty.

YN ENG 4(~99).QXP 4/16/2012 10:15 AM Page 5

REMOTE KEYLESS ENTRY (IF EQUIPPED)

■ Type A



OAM049097L

■ Type B



OXM049001L

Remote keyless entry system operations

Lock (1)

All doors are locked if the lock button is pressed.

If all doors are closed, the hazard warning lights blink once to indicate that all doors are locked. If any door is opened when the lock button is pressed, all doors will not lock.

Unlock (2)

All doors are unlocked if the unlock button is pressed.

The hazard warning lights will blink twice to indicate that all doors are unlocked.

After depressing this button, the doors will be locked automatically unless you open any door within 30 seconds.

Tailgate unlock (3, if equipped)

The tailgate is unlocked if the button is pressed for more than 1 second.

The hazard warning lights will blink twice to indicate that the tailgate is unlocked.

After depressing this button, the tailgate will be locked automatically unless you open the tailgate within 30 seconds.

Also, once the tailgate is opened and then closed, the tailgate will be locked automatically.

✻ The word “HOLD” is written on the button to inform you that you must press and hold the button for 1 second.

Transmitter precautions

✻ NOTICE

The transmitter will not work if any of following occur:

- **The ignition key is in ignition switch.**
- **You exceed the operating distance limit (about 10 m [30 feet]).**
- **The battery in the transmitter is weak.**
- **Other vehicles or objects may be blocking the signal.**
- **The weather is extremely cold.**
- **The transmitter is close to a radio transmitter such as a radio station or an airport which can interfere with normal operation of the transmitter.**

When the transmitter does not work properly, open and close the door with the ignition key. If you have a problem with the transmitter, we recommend that you contact an authorized Kia dealer.

(Continued)

YN ENG 4(~99).QXP 4/16/2012 10:15 AM Page 6

(Continued)

- **If the transmitter is in close proximity to your cell phone or smart phone, the signal from the transmitter could be blocked by normal operation of your cell phone or smart phone. This is especially important when the phone is active such as making call, receiving calls, text messaging, and/or sending/receiving emails. Avoid placing the transmitter and your cell phone or smart phone in the same pants or jacket pocket and maintain adequate distance between the two devices.**

⚠ CAUTION

Keep the transmitter away from water or any liquid. If the keyless entry system is inoperative due to exposure to water or liquids, it will not be covered by your manufacturer vehicle warranty.

⚠ CAUTION

Changes or modifications not expressly approved by the party responsible for compliance could void the user's authority to operate the equipment. If the keyless entry system is inoperative due to changes or modifications not expressly approved by the party responsible for compliance, it will not be covered by your manufacturer's vehicle warranty.



OED039003A

Battery replacement

The transmitter uses a 3 volt lithium battery which will normally last for several years. When replacement is necessary, use the following procedure.

1. Insert a slim tool into the slot and gently pry open the transmitter center cover (1).
2. Replace the battery with new one. When replacing the battery, make sure the battery positive "+" symbol faces up as indicated in the illustration.
3. Install the battery in the reverse order of removal.

YN ENG 4(~99).QXP 4/16/2012 10:15 AM Page 7

For transmitter replacement, we recommend that you contact an authorized Kia dealer.

⚠ CAUTION

- ***The keyless entry system transmitter is designed to give you years of trouble-free use, however it can malfunction if exposed to moisture or static electricity. If you are unsure how to use your transmitter or replace the battery, we recommend that you contact an authorized Kia dealer.***
- ***Using the wrong battery can cause the transmitter to malfunction. Be sure to use the correct battery.***
- ***To avoid damaging the transmitter, don't drop it, get it wet, or expose it to heat or sunlight.***

⚠ CAUTION

An inappropriately disposed battery can be harmful to the environment and human health.
Dispose the battery according to your local law(s) or regulation.

YN ENG 4(~99).QXP 4/16/2012 10:15 AM Page 8

SMART KEY (IF EQUIPPED)



OXM049001L

With a smart key, you can lock or unlock a door (and tailgate) and even start the engine without inserting the key.

The functions of the buttons on a smart key are similar to the remote keyless entry. (Refer to the “Remote keyless entry” in this section.)

Smart key functions

Carrying the smart key, you may lock and unlock the vehicle doors (and tailgate). Also, you may start the engine. Refer to the following, for more details.

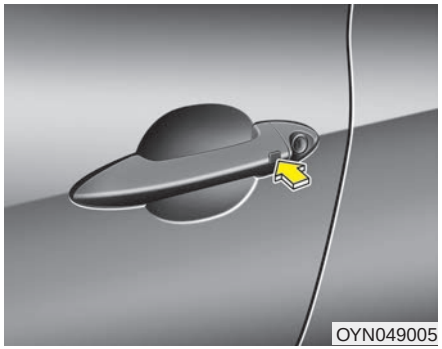

OYN049005

Locking

Pressing the button of the front outside door handles with all doors (and tailgate) closed and any door unlocked, locks all the doors (and tailgate). The hazard warning lights will blink once to indicate that all doors (and tailgate) are locked. The button will only operate when the smart key is within 0.7 m (28 in.) from the outside door handle. If you want to make sure that a door has locked or not, you should check the door lock button inside the vehicle or pull the outside door handle.

Even though you press the button, the doors will not lock and the chime sounds if any of the following occurs:

- The smart key is in the vehicle.
- The ENGINE START/STOP button is in the ACC or ON position.
- Any door except the tailgate is opened.

Unlocking

Pressing the button of the front outside door handles with all doors (and tailgate) closed and locked, unlocks all the doors (and tailgate). The hazard warning lights will blink twice to indicate that all doors (and tailgate) are unlocked. The button will only operate when the smart key is within 0.7 m (28 in.) from the outside door handle.

When the smart key is recognized in the area of 0.7 m (28 in.) from the front outside door handle, other people can also open a door without possession of the smart key.

YN ENG 4(~99).QXP 4/16/2012 10:15 AM Page 9

Tailgate unlocking

If you are within 0.7 m (28 in.) from the outside tailgate handle, with your smart key in possession, the tailgate will unlock and open when you press the tailgate handle switch.

The hazard warning lights will blink twice to indicate that the tailgate is unlocked.

Also, once the tailgate is opened and then closed, the tailgate will lock automatically.

Start-up

You can start the engine without inserting the key. For detailed information refer to “Starting the engine with a smart key” in section 5.

Smart key precautions

✻ NOTICE

- **If, for some reason, you happen to lose your smart key, you will not be able to start the engine. Tow the vehicle, if necessary. We recommend that you contact an authorized Kia dealer.**
- **A maximum of 2 smart keys can be registered to a single vehicle. If you lose a smart key, we recommend that you contact an authorized Kia dealer.**
- **The smart key will not work if any of the following occurs:**
  - **The smart key is close to a radio transmitter such as a radio station or an airport which can interfere with normal operation of the smart key.**
  - **The smart key is near a mobile two-way radio system or a cellular phone.**
  - **Another vehicle’s smart key is being operated close to your vehicle.**

  When the smart key does not work properly, open and close the door with the mechanical key. If you have a problem with the smart key, we recommend that you contact an authorized Kia dealer.

(Continued)

(Continued)

- **If the smart key is in close proximity to your cell phone or smart phone, the signal from the smart key could be blocked by normal operation of your cell phone or smart phone. This is especially important when the phone is active such as making call, receiving calls, text messaging, and/or sending/receiving emails. Avoid placing the smart key and your cell phone or smart phone in the same pants or jacket pocket and maintain adequate distance between the two devices.**

⚠ CAUTION

Keep the smart key away from water or any liquid. If the keyless entry system is inoperative due to exposure to water or liquids, it will not be covered by your manufacturer’s vehicle warranty.

YN ENG 4(~99).QXP 4/16/2012 10:15 AM Page 10

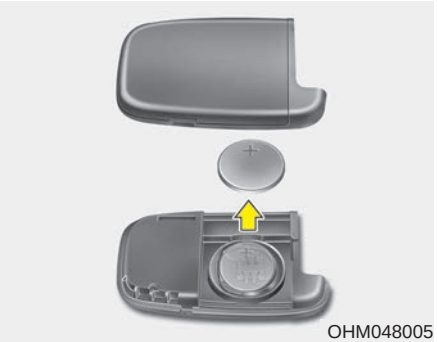

OHM048005

Battery replacement

A smart key battery should last for several years, but if the smart key is not working properly, try replacing the battery with a new one. If you are unsure how to use your smart key or replace the battery, we recommend that you contact an authorized Kia dealer.

✻ NOTICE

The circuit inside the smart key can have a problem if exposed to moisture or static electricity. If you are unsure how to use your smart key or replace the battery, we recommend that you contact an authorized Kia dealer.

1. Pry open the rear cover of the smart key.
2. Replace the battery with a new battery (CR2032). When replacing the battery, make sure the battery positive "+" symbol faces up as indicated in the illustration.
3. Install the battery in the reverse order of removal.

✻ NOTICE

- **Using the wrong battery can cause the smart key to malfunction. Be sure to use the correct battery.**
- **Circuits inside the smart key may develop problems when dropped, exposed to moisture or static electricity.**
- **If you suspect that your smart key might have sustained some damage, or you feel your smart key is not working correctly, we recommend that you contact an authorized Kia dealer.**

⚠ CAUTION

An inappropriately disposed battery can be harmful to the environment and human health.

Dispose the battery according to your local law(s) or regulation.

YN ENG 4(~99).QXP 4/16/2012 10:15 AM Page 11

THEFT-ALARM SYSTEM (IF EQUIPPED)

(if equipped)



OJC040170

Vehicles equipped with a theft alarm system will have a label attached to the vehicle with the following words:
1. WARNING
2. SECURITY SYSTEM

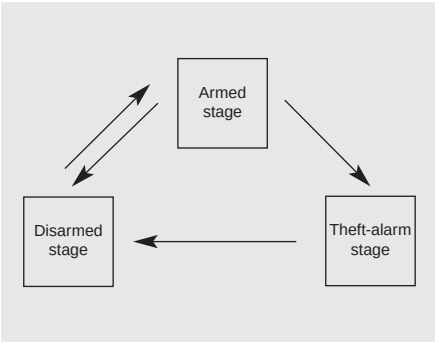

This system is designed to provide protection from unauthorized entry into the car. This system is operated in three stages: the first is the "Armed" stage, the second is the "Theft-alarm" stage, and the third is the "Disarmed" stage. If triggered, the system provides an audible alarm with blinking of the hazard warning lights.

Armed stage

Park the car and stop the engine. Arm the system as described below.

1. Remove the ignition key from the ignition switch and exit the vehicle.
2. Make sure that all doors (and tailgate) and the engine hood are closed and latched.
3. Lock the doors using the transmitter of the keyless entry system.

After completion of the steps above, the hazard warning lights will blink once to indicate that the system is armed.

If any door (or tailgate) or engine hood remains open, the hazard warning lights will not blink and the theft-alarm will not arm. If all doors (and tailgate) and engine hood are closed after the lock button is pressed, the hazard warning lights blink once.

Do not arm the system until all passengers have left the vehicle. If the system is armed while a passenger(s) remains in the vehicle, the alarm may be activated when the remaining passenger(s) leave the vehicle. If any door (or tailgate) or engine hood is opened within 30 seconds after the system enters the armed stage, the system is disarmed to prevent unnecessary alarm.

YN ENG 4(~99).QXP 4/16/2012 10:15 AM Page 12

Theft-alarm stage

The alarm will be activated if any of the following occurs while the system is armed.

- A front or rear door is opened without using the transmitter (or smart key).
- The tailgate is opened without using the transmitter (or smart key).
- The engine hood is opened.

The siren will sound and the hazard warning lights will blink continuously for 27 seconds, unless the system is disarmed. To turn off the system, unlock the doors with the transmitter (or smart key).

Disarmed stage

The system will be disarmed when:

Transmitter

- The door unlock button is pressed.
- The engine is started. (within 3 seconds)
- The ignition switch is in the “ON” position for 30 seconds or more.

Smart key

- The door unlock button is pressed.
- The button of the front outside door is pressed while carrying the smart key.
- The engine is started. (within 3 seconds)

After the doors are unlocked, the hazard warning lights will blink twice to indicate that the system is disarmed.

After pressing the unlock button, if any door (or tailgate) is not opened within 30 seconds, the system will be rearmed.

✻ NOTICE - Immobilizer system

- **If the system is not disarmed with the transmitter, insert the key into the ignition switch and start the engine. Then the system will be disarmed.**
- **If you lose your keys, we recommend that you consult your authorized Kia dealer.**

✻ NOTICE - Non-immobilizer system

- **Avoid trying to start the engine while the alarm is activated. The vehicle starting motor is disabled during the theft-alarm stage.**
  If the system is not disarmed with the transmitter, insert the key into the ignition switch, turn the ignition switch to the ON position and wait for 30 seconds. Then the system will be disarmed.
- **If you lose your keys, we recommend that you consult your authorized Kia dealer.**

⚠ CAUTION

Do not change, alter or adjust the theft-alarm system because it could cause the theft-alarm system to malfunction. We recommend that the system be serviced by an authorized Kia dealer.

Malfunctions caused by improper alterations, adjustments or modifications to the theft-alarm system are not covered by your vehicle manufacturer warranty.

YN ENG 4(~99).QXP 4/16/2012 10:15 AM Page 13

DOOR LOCKS

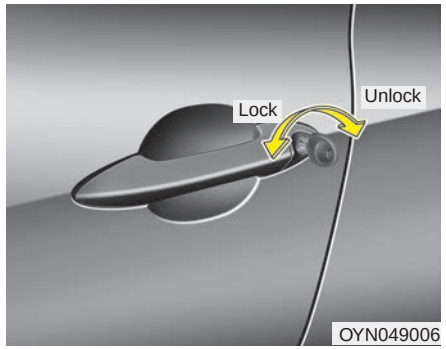

Operating door locks from outside the vehicle

- Turn the key toward rear of vehicle to unlock and toward front of vehicle to lock.
- If you lock/unlock the door with a key, all vehicle doors will lock/unlock automatically. (if equipped)
- Doors can also be locked and unlocked with the transmitter (if equipped).
- Once the doors are unlocked, they may be opened by pulling the door handle.
- When closing the door, push the door by hand. Make sure that doors are closed securely.

✻ NOTICE

- **In cold and wet climates, door lock and door mechanisms may not work properly due to freezing conditions.**
- **If the door is locked/unlocked multiple times in rapid succession with either the vehicle key or door lock switch, the system may stop operating temporarily in order to protect the circuit and prevent damage to system components.**

⚠ WARNING

- **If you don't close the door securely, the door may open again.**
- **Be careful that someone's body and hands are not trapped when closing the door.**

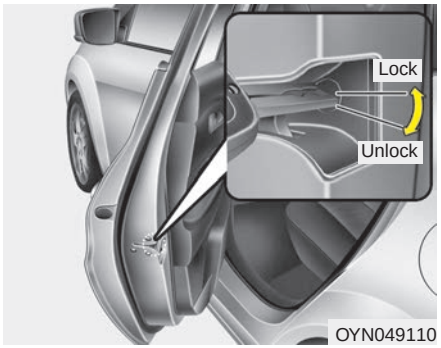

In case of an emergency

If the power door lock switch does not operate electrically, you can only lock the door(s) with the ignition key from the outside key hole.

The doors without the outside key hole, you can lock as follows;

1. Open the door.
2. Insert the key into the emergency door lock hole and turn the key horizontally to lock.
3. Close the door securely.

The tailgate will lock and will not unlock if you close the tailgate when the power door lock switch does not operate electrically.

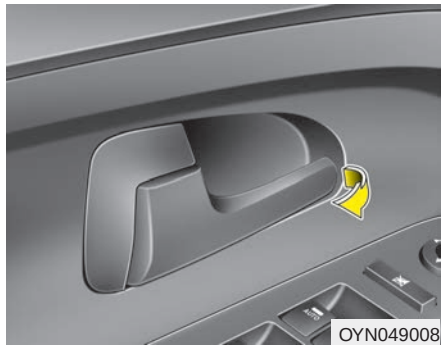
OYN049008

Operating door locks from inside the vehicle

With the door handle

If the inner door handle is pulled once when the door is locked, the door will unlock.

If the inner door handle is pulled twice, the door will open.

Inside handle override (front door, if equipped)

If the inner door handle is pulled when the door is locked, the door will unlock and open.

Inside handle central door unlock (front door, if equipped)

If the inner door handle is pulled when all door are locked, all doors will unlock.

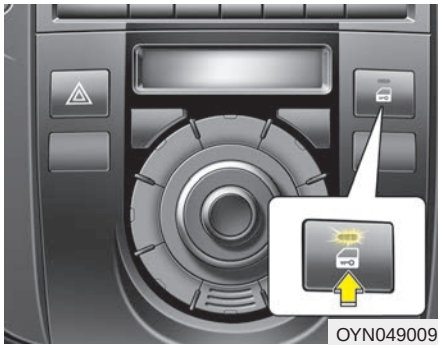
OYN049009

With central door lock switch

It is operated by depressing the door lock switch.

- When pushing the door lock switch, all vehicle doors will lock and the indicator light on the switch will illuminate.

  If any door is opened when the switch is pushed, all doors will not lock.
- If any door is unlocked, the indicator of the door lock switch will blink. If you push the switch when the indicator is blinking, all doors will lock.
- When pushing the door lock switch again, all vehicle doors will unlock and the indicator light on the switch will not illuminate.

⚠ WARNING - Door lock malfunction

If a power door lock ever fails to function while you are in the vehicle, try one or more of the following techniques to exit:

- **Operate the other door locks and handles, front and rear.**
- **Lower a driver's window and use the key to unlock the door from outside.**
- **Move to the cargo area and open the tailgate.**

YN ENG 4(~99).QXP 4/16/2012 10:15 AM Page 15

⚠ WARNING - Doors

- **The doors should always be fully closed and locked while the vehicle is in motion to prevent accidental opening of the door. Locked doors will also discourage potential intruders when the vehicle stops or slows.**
- **Be careful when opening doors and watch for vehicles, motorcycles, bicycles or pedestrians approaching the vehicle in the path of the door. Opening a door when something is approaching can cause damage or injury.**

⚠ WARNING - Unlocked vehicles

Leaving your vehicle unlocked can invite theft or possible harm to you or others from someone hiding in your vehicle while you are gone. Always remove the ignition key, engage the parking brake, close all windows and lock all doors when leaving your vehicle unattended.

⚠ WARNING - Unattended children

An enclosed vehicle can become extremely hot, causing death or severe injury to unattended children or animals who cannot escape the vehicle. Furthermore, children might operate features of the vehicle that could injure them, or they could encounter other harm, possibly from someone gaining entry to the vehicle. Never leave children or animals unattended in your vehicle.

Impact sensing door unlock system (if equipped)

All doors will automatically unlock when an impact causes the air bags to deploy.

Speed sensing door lock system (if equipped)

When the speed of the vehicle keeps above15 km/h for 1 second, it will automatically lock all doors. For deactivation of this feature, we recommend that you contact an authorized Kia dealer.

YN ENG 4(~99).QXP 4/16/2012 10:15 AM Page 16

Deadlock system (if equipped)

Some vehicles are equipped with a deadlocking system. Deadlocks prevent opening a door from either inside or outside the vehicle once the deadlocks have been activated providing an additional measure of vehicle security.

To lock the vehicle using the deadlock function, the doors must be locked using the (smart) key or the Remote Keyless Entry transmitter. To unlock the vehicle, the (smart) key or the transmitter must be used again.

To lock a vehicle without using the deadlock function, the doors should be locked by pressing the door lock button and closing the doors.

⚠ WARNING

Do not lock the doors with the (smart) key or the transmitter with anybody left in the vehicle. The passenger in the vehicle cannot unlock the doors with the door lock button. For example, if the door is locked with the transmitter, the passenger in the vehicle cannot unlock the door without the transmitter.

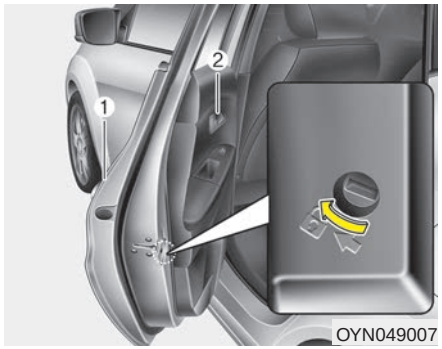

Child-protector rear door lock

The child safety lock is provided to help prevent children from accidentally opening the rear doors from inside the vehicle. The rear door safety locks should be used whenever children are in the vehicle.

1. Open the rear door.
2. Turn the child safety lock located on the rear edge of the door to the lock (🔒) position. When the child safety lock is in the lock position, the rear door will not open even though the inner door handle is pulled.
3. Close the rear door.

To open the rear door, pull the outside door handle (1).

Even though the doors may be unlocked, the rear door will not open by pulling the inner door handle (2) until the rear door child safety lock is unlocked.

⚠ WARNING - Rear door locks

If children accidentally open the rear doors while the vehicle is in motion, they could fall out and be severely injured or killed. To prevent children from opening the rear doors from the inside, the rear door safety locks should be used whenever children are in the vehicle.

YN ENG 4(~99).QXP 4/16/2012 10:15 AM Page 17

TAILGATE

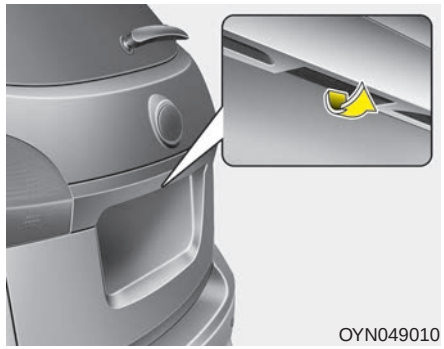
OYN049010

Opening the tailgate

- The tailgate is locked or unlocked when all doors are locked or unlocked with the key, transmitter or central door lock switch.
- Only the tailgate is unlocked if the only tailgate unlock button on the transmitter is pressed (if equipped). Once the tailgate is opened and then closed, the tailgate is locked automatically.
- If unlocked, the tailgate can be opened by pressing the handle and pulling it up.

✻ NOTICE

- **In cold and wet climates door lock and door mechanisms may not work properly due to freezing conditions.**
- **When jacking up the vehicle to change a tire or repair the vehicle, do not operate the tailgate. This could cause the tailgate to close improperly.**

⚠ CAUTION

Do not put any heavy object on the covering shelf. It may damage the covering shelf.

⚠ WARNING

• Do not put any object on the covering shelf. If the vehicle suddenly stops or makes a curve, the object may injure passengers.

• Watch out for the edge of the covering shelf, when you are using the luggage room. You may injure yourself.

Closing the tailgate

To close the tailgate, lower and push down the tailgate firmly. Make sure that the tailgate is securely latched.

⚠ WARNING - Exhaust fumes

If you drive with the tailgate open, you will draw dangerous exhaust fumes into your vehicle which can cause serious injury or death to vehicle occupants.

If you must drive with the tailgate open, keep the air vents and all windows open so that additional outside air comes into the vehicle.

⚠ WARNING - Rear cargo area

Occupants should never ride in the rear cargo area where no restraints are available. To avoid injury in the event of an accident or sudden stops, occupants should always be properly restrained.

YN ENG 4(~99).QXP 4/16/2012 10:16 AM Page 18

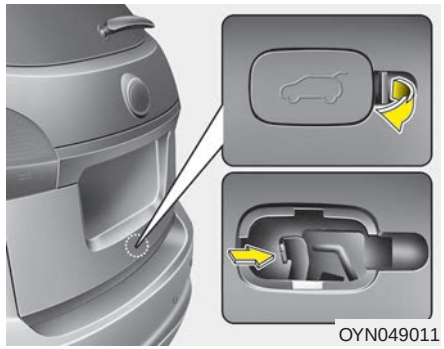
OYN049011

Emergency tailgate safety release

Your vehicle is equipped with the emergency tailgate safety release lever located on the bottom of the tailgate. When someone is inadvertently locked in the luggage compartment, the tailgate can be opened by pushing the release lever and pushing open the tailgate.

⚠ WARNING

- **For emergency, be fully aware of the location of the emergency tailgate safety release lever in this vehicle and how to open the tailgate if you are accidentally locked in the luggage compartment.**
- **No one should be allowed to occupy the luggage compartment of the vehicle at any time. The luggage compartment is a very dangerous location in the event of a crash.**
- **Use the release lever for emergency only. Use extreme caution, especially while the vehicle is in motion.**

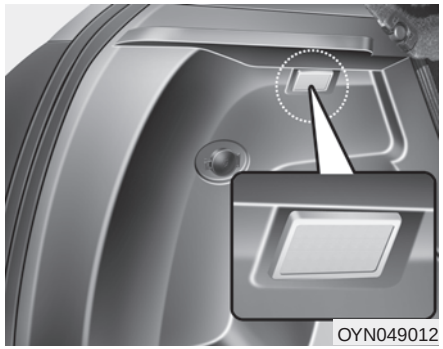
OYN049012

Luggage room lamp (if equipped)

Luggage room lamp turns on when the tailgate is opened. It remains on until the tailgate is securely closed.

✻ NOTICE

Make sure to close the tailgate securely. If it remains open while engine is not running, it may cause battery discharge because luggage room lamp remains on.

YN ENG 4(~99).QXP 4/16/2012 10:16 AM Page 19

WINDOWS

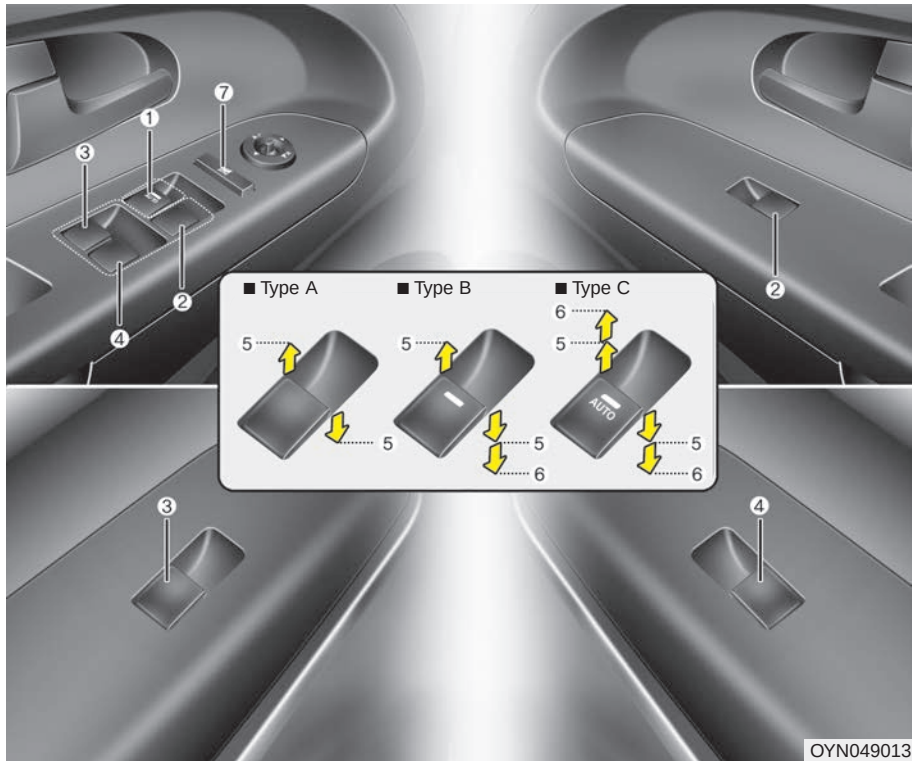

(1) Driver's door power window switch
(2) Front passenger's door power window switch
(3) Rear door (left) power window switch*
(4) Rear door (right) power window switch*
(5) Window opening and closing
(6) Automatic power window*
(7) Power window lock switch*

* if equipped

✻ NOTICE

In cold and wet climates, power windows may not work properly due to freezing conditions.

YN ENG 4(~99).QXP 4/16/2012 10:16 AM Page 20

Power windows

The ignition switch must be in the ON position for power windows to operate.

Each door has a power window switch that controls the door's window. The driver has a power window lock switch which can block the operation of passenger windows. The power windows can be operated for approximately 30 seconds after the ignition key is removed or turned to the ACC or LOCK position. However, if the front doors are opened, the power windows cannot be operated within the 30 seconds period after the ignition key removal.

The driver's door has a master power window switch that controls all the windows in the vehicle.

✻ NOTICE

While driving with the rear windows down or with the sunroof (if equipped) in an open (or partially open position), your vehicle may demonstrate a wind buffeting or pulsation noise. This noise is a normal occurrence and can be reduced or eliminated by taking the following actions. If the noise occurs with one or both of the rear windows down, partially lower both front windows approximately one inch. If you experience the noise with the sunroof open, slightly reduce the size of the sunroof opening

■ Type A

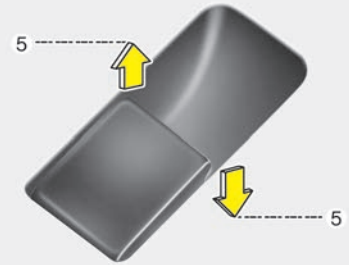

OYN049136

Window opening and closing

Type A

To open or close a window, press down or pull up the front portion of the corresponding switch to the first detent position (5).

YN ENG 4(~99).QXP 4/16/2012 10:16 AM Page 21

■ Type B

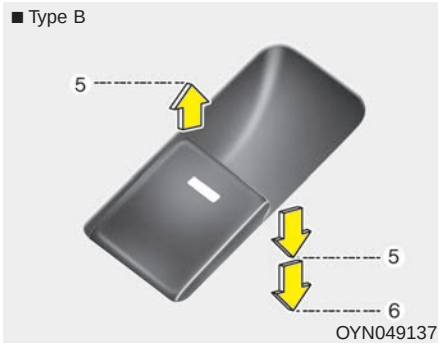

OYN049137

Type B - Auto down window (if equipped)

Depressing the power window switch momentarily to the second detent position (6) completely lowers the window even when the switch is released. To stop the window at the desired position while the window is in operation, pull up the switch momentarily to the opposite direction of the window movement.

■ Type C



OYN049138

Type C - Auto up/down window (if equipped)

Pressing or pulling up the power window switch momentarily to the second detent position (6) completely lowers or lifts the window even when the switch is released. To stop the window at the desired position while the window is in operation, pull up or press down and release the switch.

If the power window does not operate normally, the automatic power window system must be reset as follows:

1. Turn the ignition switch to the ON position.
2. Close the window and continue pulling up the power window switch for at least 1 second after the window is completely closed.

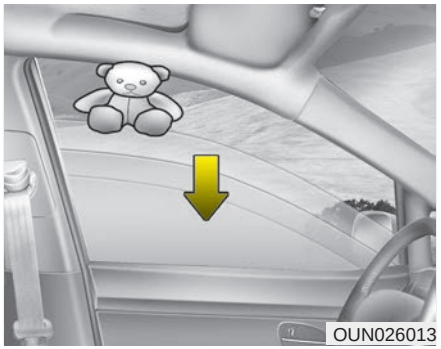

OUN026013

Automatic reversal (if equipped)

If the upward movement of the window is blocked by an object or part of the body, the window will detect the resistance and will stop upward movement. The window will then lower approximately 30 cm (11.8 in.) to allow the object to be cleared.

If the window detects the resistance while the power window switch is pulled up continuously, the window will stop upward movement then lower approximately 2.5 cm (1 in.). And if the power window switch is pulled up continuously again within 5 seconds after the window is lowered by the automatic window reversal feature, the automatic window reversal will not operate.

YN ENG 4(~99).QXP 4/16/2012 10:16 AM Page 22

✻ NOTICE

The automatic reverse feature for the window is only active when the "auto up" feature is used by fully pulling up the switch. The automatic reverse feature will not operate if the window is raised using the halfway position on the power window switch.

⚠ WARNING

Always check for obstructions before raising any window to avoid injuries or vehicle damage. If an object less than 4 mm (0.16 in.) in diameter is caught between the window glass and the upper window channel, the automatic reverse window may not detect the resistance and will not stop and reverse direction.

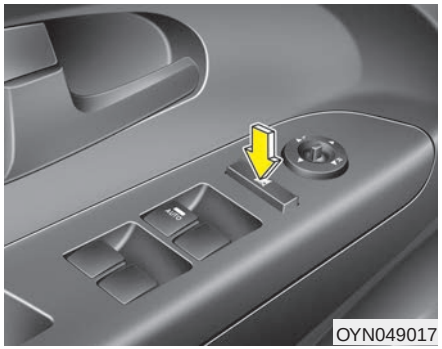

Power window lock button

- The driver can disable the power window switches on the rear passenger doors by pressing the power window lock button located on the driver's door to the LOCK position(pressed). (For Europe)
- When the power window lock button is in the LOCK position (pressed), the driver's master control can operate all power windows. (For Europe)

⚠ CAUTION

- ***To prevent possible damage to the power window system, do not open or close two windows or more at the same time. This will also ensure the longevity of the fuse.***
- ***Never try to operate the main switch on the driver's door and the individual door window switch in opposing directions at the same time. If this is done, the window will stop and cannot be opened or closed.***

YN ENG 4(~99).QXP 4/16/2012 10:16 AM Page 23

⚠ WARNING - Windows

- **NEVER leave the ignition key in the vehicle.**
- **NEVER leave any child unattended in the vehicle. Even very young children may inadvertently cause the vehicle to move, entangle themselves in the windows, or otherwise injure themselves or others.**
- **Always double check to make sure all arms, hands, head and other obstructions are safely out of the way before closing a window.**
- **Do not allow children to play with the power windows. Keep the driver's door power window lock switch in the LOCK position (depressed). Serious injury can result from unintentional window operation by the child.**
- **Do not extend face or arms outside the window opening while driving.**

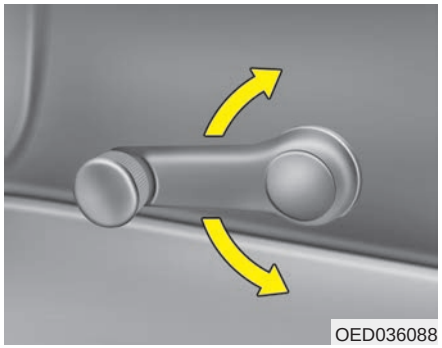
OED036088

Manual windows (if equipped)

To raise or lower the window, turn the window regulator handle clockwise or counterclockwise.

⚠ WARNING

When opening or closing the windows, make sure your passenger's arms, hands and body are safely out of the way.

HOOD

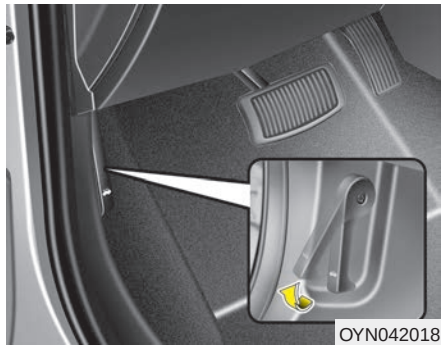
OYN042018

Opening the hood

1. Pull the release lever to unlatch the hood. The hood should pop open slightly.

⚠ WARNING

Open the hood after turning off the engine on a flat surface, shifting the shift lever to the P(Park) position for automatic transaxle and to the 1st(First) gear or R(Reverse) for manual transaxle, and setting the parking brake.

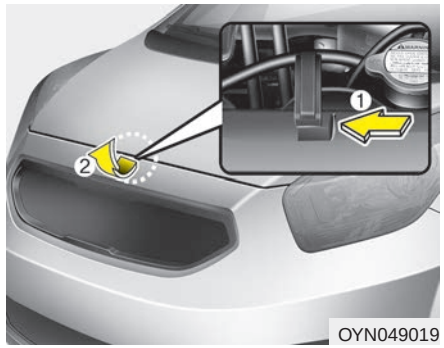

OYN049019

2. Go to the front of the vehicle, raise the hood slightly, push the secondary latch inside of the hood center to the left side and lift the hood.

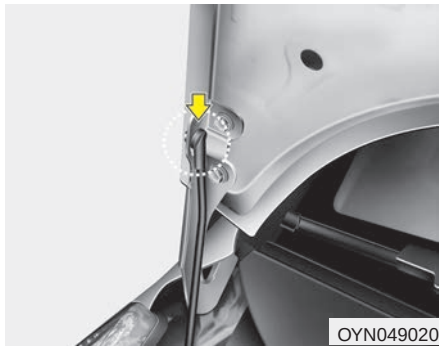
OYN049020

3. Pull out the support rod from the hood.
4. Hold the hood open with the support rod.

⚠ WARNING - Hot parts

Be very careful not to touch the support rod when the engine and parts are hot. This could burns or other serious injury.

YN ENG 4(~99).QXP 4/16/2012 10:16 AM Page 25

Closing the hood

1. Before closing the hood, check the following:
   - All filler caps in engine compartment must be correctly installed.
   - Gloves, rags or any other combustible material must be removed from the engine compartment.
2. Return the support rod to its clip to prevent it from rattling.
3. Lower the hood until it is about 30 cm (1 ft.) above the closed position and let it drop. Make sure that it locks into place.

⚠ WARNING

- **Before closing the hood, ensure that all obstructions are removed from the hood opening. Closing the hood with an obstruction present in the hood opening may result in property damage or severe personal injury.**
- **Do not leave gloves, rags or any other combustible material in the engine compartment. Doing so may cause a heat-induced fire.**

⚠ WARNING

- **Always double check to be sure that the hood is firmly latched before driving away. If it is not latched, the hood could open while the vehicle is being driven, causing a total loss of visibility, which might result in an accident.**
- **The support rod must be inserted completely into the hole provided whenever you inspect the engine compartment. This will prevent the hood from falling and possibly injuring you.**
- **Do not move the vehicle with the hood raised. The view will be blocked and the hood could fall or get damaged.**

YN ENG 4(~99).QXP 4/16/2012 10:16 AM Page 26

FUEL FILLER LID

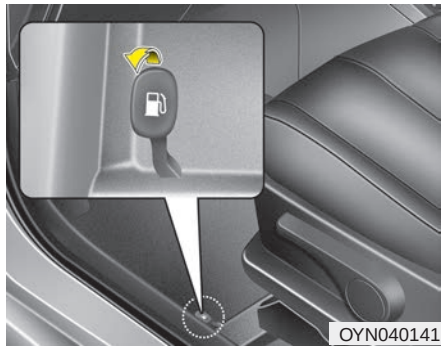
OYN040141

Opening the fuel filler lid

The fuel filler lid must be opened from inside the vehicle by pulling up the fuel filler lid opener.

✻ NOTICE

If the fuel filler lid does not open because ice has formed around it, tap lightly or push on the lid to break the ice and release the lid. Do not pry on the lid. If necessary, spray around the lid with an approved de-icer fluid (do not use radiator anti-freeze) or move the vehicle to a warm place and allow the ice to melt.

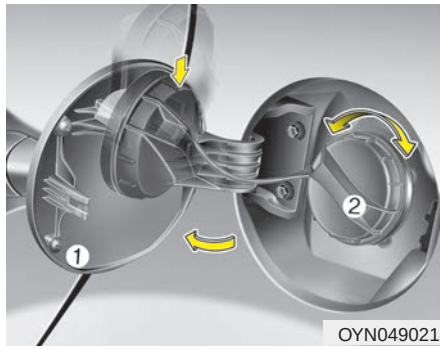

OYN049021

1. Stop the engine.
2. To open the fuel filler lid, pull the fuel filler lid opener up.
3. Pull open the fuel filler lid (1).
4. To remove the cap (2), turn the fuel filler cap counterclockwise.
5. Refuel as needed.

Closing the fuel filler lid

1. To install the cap, turn it clockwise until it “clicks”. This indicates that the cap is securely tightened.
2. Close the fuel filler lid and push it lightly and make sure that it is securely closed.

⚠ WARNING - Refueling

- **If pressurized fuel sprays out, it can cover your clothes or skin and thus subject you to the risk of fire and burns. Always remove the fuel cap carefully and slowly. If the cap is venting fuel or if you hear a hissing sound, wait until the condition stops before completely removing the cap.**
- **Do not "top off" after the nozzle automatically shuts off when refueling.**
- **Always check that the fuel cap is installed securely to prevent fuel spillage in the event of an accident.**

YN ENG 4(~99).QXP 4/16/2012 10:16 AM Page 27

⚠ WARNING - Refueling dangers

Automotive fuels are flammable materials. When refueling, please note the following guidelines carefully. Failure to follow these guidelines may result in severe personal injury, severe burns or death by fire or explosion.

- **Read and follow all warning at the gas station facility.**
- **Before refueling note the location of the Emergency Gasoline Shut-Off, if available, at the gas station facility.**
- **Before touching the fuel nozzle, you should eliminate potentially dangerous static electricity discharge by touching another metal part of the vehicle, a safe distance away from the fuel filler neck, nozzle, or other gas source.**

(Continued)

(Continued)

- **Do not get back into a vehicle once you have begun refueling since you can generate static electricity by touching, rubbing or sliding against any item or fabric (polyester, satin, nylon, etc.) capable of producing static electricity. Static electricity discharge can ignite fuel vapors resulting in rapid burning. If you must re-enter the vehicle, you should once again eliminate potentially dangerous static electricity discharge by touching a metal part of the vehicle, away from the fuel filler neck, nozzle or other gasoline source.**
- **When using an approved portable fuel container, be sure to place the container on the ground prior to refueling. Static electricity discharge from the container can ignite fuel vapors causing a fire. Once refueling has begun, contact with the vehicle should be maintained until the filling is complete.**

(Continued)

(Continued)

Use only approved portable plastic fuel containers designed to carry and store gasoline.

- **Do not use cellular phones while refueling. Electric current and/or electronic interference from cellular phones can potentially ignite fuel vapors causing a fire.**
- **When refueling, always shut the engine off. Sparks produced by electrical components related to the engine can ignite fuel vapors causing a fire. Once refueling is complete, check to make sure the filler cap and filler door are securely closed, before starting the engine.**
- **DO NOT use matches or a lighter and DO NOT SMOKE or leave a lit cigarette in your vehicle while at a gas station especially during refueling. Automotive fuel is highly flammable and can, when ignited, result in fire.**

(Continued)

YN ENG 4(~99).QXP 4/16/2012 10:16 AM Page 28

(Continued)

- **If a fire breaks out during refueling, leave the vicinity of the vehicle, and immediately contact the manager of the gas station and then contact the local fire department. Follow any safety instructions they provide.**

⚠ CAUTION

- ***Make sure to refuel your vehicle according to the "Fuel requirements" suggested in section 1.***
- ***If the fuel filler cap requires replacement, please make sure that you use parts designed for replacement in your vehicle. An incorrect fuel filler cap can result in a serious malfunction of the fuel system or emission control system. For more detailed information, we recommend that you contact an authorized Kia dealer.***
- ***Do not spill fuel on the exterior surfaces of the vehicle. Any type of fuel spilled on painted surfaces may damage the paint.***
- ***After refueling, make sure the fuel cap is installed securely to prevent fuel spillage in the event of an accident.***

YN ENG 4(~99).QXP 4/16/2012 10:16 AM Page 29

PANORAMA SUNROOF (IF EQUIPPED)


OYN049022

If your vehicle is equipped with a sunroof, you can slide or tilt your sunroof with the sunroof control lever located on the overhead console.

The sunroof can only be opened, closed, or tilted when the ignition switch is in the ON position.

Sunroof open warning chime (if equipped)

If the driver turns off the ignition key (smart key: turns off the engine) and opens the driver-side door when the sunroof is not fully closed, the warning chime will sound for approximately 7 seconds.

Close the sunroof securely when leaving your vehicle.

✻ NOTICE

- **In cold and wet climates, the sunroof may not work properly due to freezing conditions.**
- **After a vehicle is washed or in a rainstorm be sure to wipe off any water that is on the sunroof before operating it.**

⚠ CAUTION

Do not continue to move the sunroof control lever after the sunroof is fully opened, closed, or tilted. Damage to the motor or system components could occur.

✻ NOTICE

The sunroof cannot tilt when it is in the slide position but can be slid while in a tilt position.

⚠ WARNING

- **Never adjust the sunroof or roller blind while driving. This could result in loss of control and an accident that may cause death, serious injury, or property damage.**
- **If you would like to carry items on the roof rack using a cross bar, do not operate the sunroof.**
- **When carrying cargo on the roof rack, do not load heavy items above the sunroof or glass roof.**
- **All occupants of the vehicle must wear their seat belts at all times. Seat belts and child restraints reduce serious or fatal injuries for all occupants in the event of a collision or sudden stop.**

YN ENG 4(~99).QXP 4/16/2012 10:16 AM Page 30

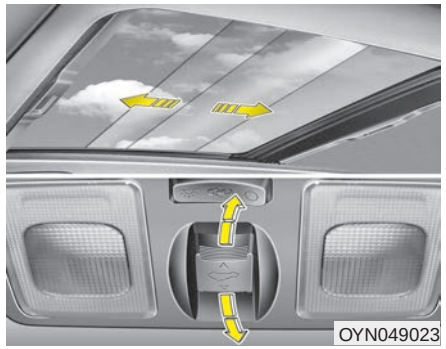
OYN049023

Sliding the sunroof

Before opening or closing the sunroof, open the roller blind.

To open or close the sunroof (manual slide feature), pull or push the sunroof control lever backward or forward to the first detent position.

Pulling the control lever downward also closes the sunroof.

To open the sunroof automatically:

Pull the sunroof control lever backward to the second detent position and then release it. The sunroof will automatically slide open all the way. However, the second time the lever is pulled the sunroof will open only while the lever is pulled.

To stop the sunroof sliding at any point, pull or push the sunroof control lever momentarily.

To close the sunroof automatically:

Push the sunroof control lever forward to the second detent position and then release it. The sunroof will close automatically but will not close all the way. If you desire to completely close the sunroof, push the lever once more until the sunroof moves to closed position.

To stop the sunroof sliding at any point, pull or push the sunroof control lever momentarily.

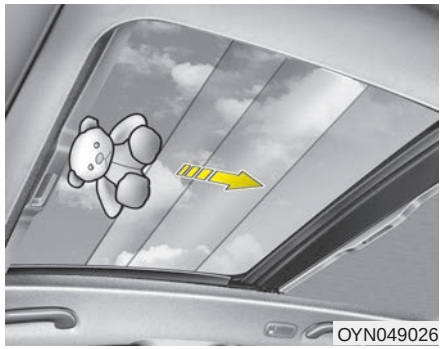
OYN049026

Automatic reversal

If an object or part of the body is detected while the sunroof is closing automatically, it will reverse the direction, and then stop.

The auto reverse function does not work if a tiny obstacle is between the sliding glass and the sunroof sash. You should always check that all passengers and objects are away from the sunroof before closing it.

YN ENG 4(~99).QXP 4/16/2012 10:17 AM Page 31

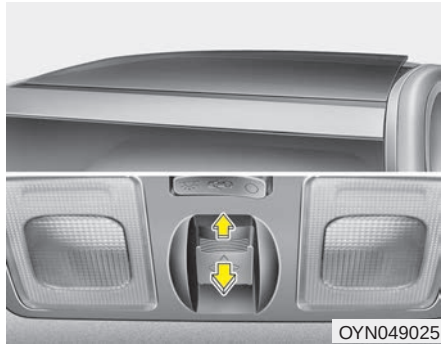
OYN049025

Tilting the sunroof

Before opening or closing the sunroof, open the roller blind.

To open the sunroof, push the sunroof control lever upward to the second detent. The sunroof will tilt all the way open. To stop the sunroof tilting at any point, operate the control lever.

To close the sunroof, pull the sunroof lever downward until the sunroof moves to the desired position.

⚠ WARNING - Sunroof

- **Be careful that no head, hands and body parts are obstructed by a closing sunroof.**
- **Do not extend the face, neck, arms or body outside the sunroof while driving.**
- **Make sure your hands and head are safely out of the way before closing a sunroof.**

⚠ CAUTION

- ***Periodically remove any dirt that may accumulate on the guide rail.***
- ***If you try to open the sunroof when the temperature is below freezing or when the sunroof is covered with snow or ice, the glass or the motor could be damaged.***
- ***Do not leave the roller blind closed while the sunroof is opened.***

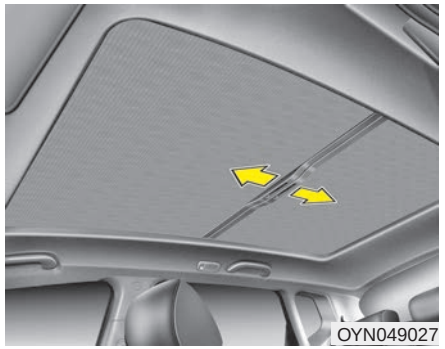
OYN049027

Roller blind

The roller blinds are installed inside of the sunroof and glass roof.

Open or close it manually when you need to.

Before opening or closing the sunroof, open the roller blind.

✻ NOTICE

It is normal for wrinkles to form on the blind because of its material characteristic.

YN ENG 4(~99).QXP 4/16/2012 10:17 AM Page 32

Resetting the sunroof

Whenever the vehicle battery is disconnected or discharged, you must reset your sunroof system as follows:

1. Turn the ignition switch to the ON position.
2. Open the roller blind.
3. Close the sunroof.
4. Release the sunroof control lever.
5. Push the sunroof control lever forward in the direction of close (about 10 seconds) until the sunroof is moved a little. Then, release the lever.
6. Push the sunroof control lever forward in the direction of close until the sunroof operates as follows;

   TILT OPEN → SLIDE OPEN → SLIDE CLOSE

   Then, release the lever.

When this is complete, the sunroof system has been reset.

YN ENG 4(~99).QXP 4/16/2012 10:17 AM Page 33

STEERING WHEEL

Electric power steering

Power steering uses the motor to assist you in steering the vehicle. If the engine is off or if the power steering system becomes inoperative, the vehicle may still be steered, but it will require increased steering effort.

The motor driven power steering is controlled by the power steering control unit which senses the steering wheel torque and vehicle speed to command the motor.

The steering effort becomes heavier as the vehicle's speed increases and becomes lighter as the vehicle's speed decreases for better control of the steering wheel.

Should you notice any change in the effort required to steer during normal vehicle operation, we recommend that the system be checked by an authorized Kia dealer.

✻ NOTICE

The following symptoms may occur during normal vehicle operation:

- **The EPS warning light does not illuminate.**

(Continued)

(Continued)

- **The steering effort is high immediately after turning the ignition switch on. This happens as the EPS system performs the diagnostics. When the diagnostics is completed, the steering effort will return to its normal condition.**
- **A click noise may be heard from the EPS relay after the ignition switch is turned to the ON or LOCK position.**
- **Motor noise may be heard when the vehicle is at a stop or at a low driving speed.**
- **If the Electric Power Steering System does not operate normally, the warning light will illuminate on the instrument cluster. The steering wheel may become difficult to control or operate abnormally. We recommend that you contact an authorized Kia dealer.**
- **The steering effort increases if the steering wheel is rotated continuously when the vehicle is not in motion. However, after a few minutes, it will return to its normal conditions.**
- **When you operate the steering wheel in low temperature, abnormal noise could occur. If temperature rises, the noise will disappear. This is a normal condition.**

Tilt steering

Tilt steering allows you to adjust the steering wheel before you drive. You can also raise it to give your legs more room when you exit and enter the vehicle.

The steering wheel should be positioned so that it is comfortable for you to drive, while permitting you to see the instrument panel warning lights and gauges.

⚠ WARNING

- **Never adjust the angle of the steering wheel while driving. You may lose steering control and cause severe personal injury, death or accidents.**
- **After adjusting, push the steering wheel both up and down to be certain it is locked in position.**

YN ENG 4(~99).QXP 4/16/2012 10:17 AM Page 34

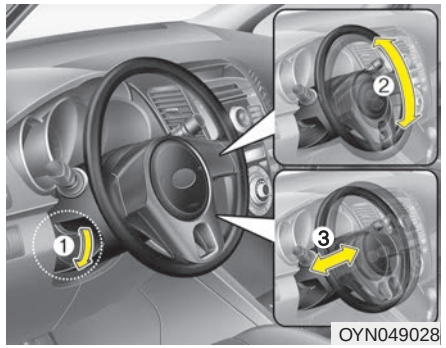

OYN049028

To change the steering wheel angle, pull down the lock release lever (1), adjust the steering wheel to the desired angle (2) and height (3), then pull up the lock-release lever to lock the steering wheel in place. Be sure to adjust the steering wheel to the desired position before driving.


OYN049029

Horn

To sound the horn, press the horn symbol on your steering wheel.

Check the horn regularly to be sure it operates properly.

✻ NOTICE

To sound the horn, press the area indicated by the horn symbol on your steering wheel (see illustration). The horn will operate only when this area is pressed.

⚠ CAUTION

Do not strike the horn severely to operate it, or hit it with your fist. Do not press on the horn with a sharp-pointed object.

YN ENG 4(~99).QXP 4/16/2012 10:17 AM Page 35

MIRRORS

Inside rearview mirror

Adjust the rearview mirror so that the center view through the rear window is seen. Make this adjustment before you start driving.

⚠ WARNING - Rear visibility

Do not place objects in the rear seat or cargo area which would interfere with your vision out the rear window.

⚠ WARNING

Do not adjust the rearview mirror while the vehicle is moving. This could result in loss of control, and an accident which could cause death, serious injury or property damage.

⚠ WARNING

Do not modify the inside mirror and do not install a wide mirror. It could result in injury, during an accident or deployment of the air bag.

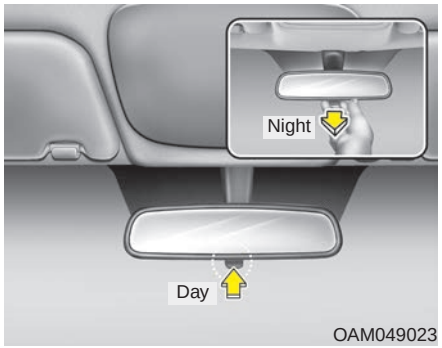

Day/night rearview mirror (if equipped)

Make this adjustment before you start driving and while the day/night lever is in the day position.

Pull the day/night lever toward you to reduce glare from the headlights of the vehicles behind you during night driving.

Remember that you lose some rearview clarity in the night position.

Electrochromic mirror (ECM) (if equipped)

The electric rearview mirror automatically controls the glare from the headlights of the car behind you in nighttime or low light driving conditions. The sensor mounted in the mirror senses the light level around the vehicle, and automatically controls the headlight glare from vehicles behind you.

When the engine is running, the glare is automatically controlled by the sensor mounted in the rearview mirror.

Whenever the shift lever is shifted into reverse (R), the mirror will automatically go to the brightest setting in order to improve the drivers view behind the vehicle.

⚠ CAUTION

When cleaning the mirror, use a paper towel or similar material dampened with glass cleaner. Do not spray glass cleaner directly on the mirror as that may cause the liquid cleaner to enter the mirror housing.

YN ENG 4(~99).QXP 4/16/2012 10:17 AM Page 36

■ Type A

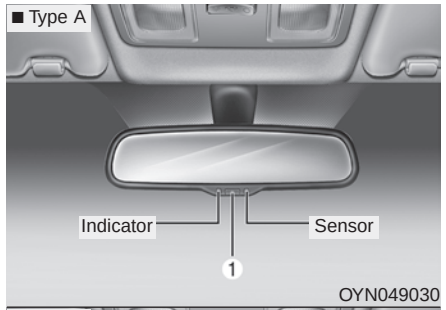

OYN049030

■ Type B

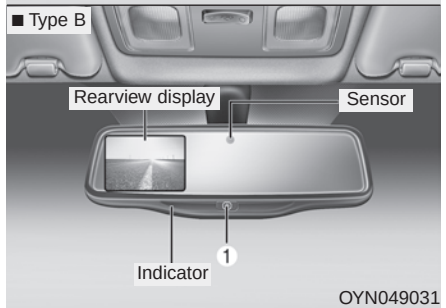

OYN049031

To operate the electric rearview mirror:

- The mirror defaults to the ON position whenever the ignition switch is turned on.
- Press the ON/OFF button (1) to turn the automatic dimming function off. The mirror indicator light will turn off.

  Press the ON/OFF button (1) to turn the automatic dimming function on. The mirror indicator light will illuminate.

Outside rearview mirror

Be sure to adjust the mirror angles before driving.

Your vehicle is equipped with both left-hand and right-hand outside rearview mirrors. The mirrors can be adjusted remotely with the remote switch (if equipped). The mirror heads can be folded back to prevent damage during an automatic car wash or when passing through a narrow street.

⚠ WARNING - Rearview mirrors

- **The right outside rearview mirror is convex. In some countries, the left outside rearview mirror is also convex. Objects seen in the mirror are closer than they appear.**
- **Use your interior rearview mirror or direct observation to determine the actual distance of following vehicles when changing lanes.**

YN ENG 4(~99).QXP 4/16/2012 10:17 AM Page 37

⚠ CAUTION

Do not scrape ice off the mirror face; this may damage the surface of the glass. If ice should restrict movement of the mirror, do not force the mirror for adjustment. To remove ice, use a deicer spray, or a sponge or soft cloth with very warm water.

⚠ CAUTION

If the mirror is jammed with ice, do not adjust the mirror by force. Use an approved spray de-icer (not radiator antifreeze) to release the frozen mechanism or move the vehicle to a warm place and allow the ice to melt.

⚠ WARNING

Do not adjust or fold the outside rearview mirrors while the vehicle is moving. This could result in loss of control, and an accident which could cause death, serious injury or property damage.

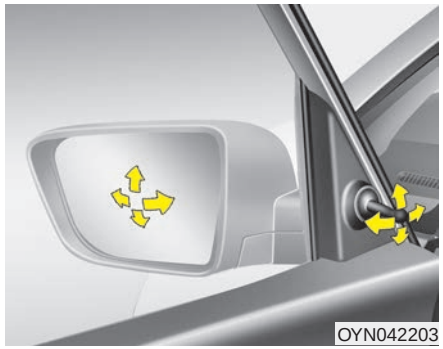

Remote control

Manual type (if equipped)

To adjust an outside mirror, move the control lever.

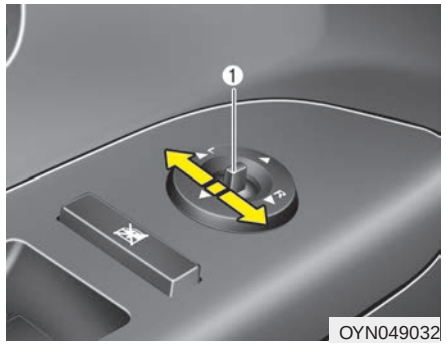

Electric type (if equipped)

The electric remote control mirror switch allows you to adjust the position of the left and right outside rearview mirrors. To adjust the position of either mirror, move the lever (1) to R or L to select the right side mirror or the left side mirror, then press a corresponding point on the mirror adjustment control to position the selected mirror up, down, left or right.

After adjustment, put the lever into neutral (center) position to prevent the inadvertent adjustment.

⚠ CAUTION

- ***The mirrors stop moving when they reach the maximum adjusting angles, but the motor continues to operate while the switch is depressed. Do not depress the switch longer than necessary, the motor may be damaged.***
- ***Do not attempt to adjust the outside rearview mirror by hand. Doing so may damage the parts.***

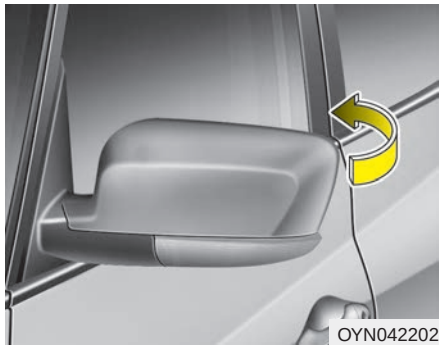

Folding the outside rearview mirror

Manual type

To fold the outside rearview mirror, grasp the housing of the mirror and then fold it toward the rear of the vehicle.

YN ENG 4(~99).QXP 4/16/2012 10:17 AM Page 39

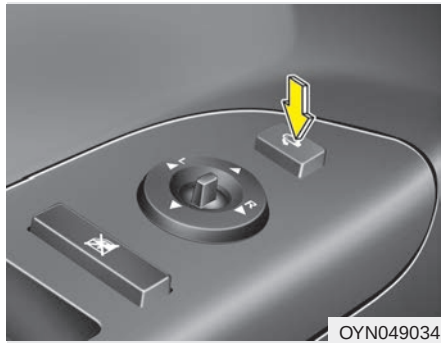

Electric Type (if equipped)

To fold the outside rearview mirror, depress the button.

To unfold it, depress the button again.

⚠ CAUTION

The electric type outside rearview mirror operates even though the ignition switch is in the LOCK position. However, to prevent unnecessary battery discharge, do not adjust the mirrors longer than necessary while the engine is not running.

⚠ CAUTION

In case of the electric type of outside rearview mirror, don't fold it by hand. It could cause the failure of the motor.

Outside rearview mirror heater (if equipped)

The outside rearview mirror heater is actuated in connection with the rear window defroster. To heat the outside rearview mirror glass, push the button ( ) for the rear window defroster.

The outside rearview mirror glass will be heated for defrosting or defogging and will give you improved rear vision in inclement weather conditions. Push the button again to turn the heater off. The outside rearview mirror heater automatically turns off after 20 minutes.

YN ENG 4(~99).QXP 4/16/2012 10:17 AM Page 40

INSTRUMENT CLUSTER

■ Gasoline Engine

Type A



Type B



1. Tachometer
2. Turn signal indicators
3. Speedometer
4. Warning and indicator lights
5. Automatic transaxle shift position indicator* or Manual transaxle shift indicator*
6. Odometer/Tripmeter*
7. Fuel gauge

* if equipped

* The actual cluster in the vehicle may differ from the illustration.

OYN049040/OYN049041

YN ENG 4(~99).QXP 4/16/2012 10:18 AM Page 41

■ Diesel Engine

Type A



Type B



1. Tachometer
2. Turn signal indicators
3. Speedometer
4. Warning and indicator lights
5. Automatic transaxle shift position indicator* or Manual transaxle shift indicator*
6. Odometer/Tripmeter*
7. Fuel gauge

* if equipped

* The actual cluster in the vehicle may differ from the illustration.

OYN049042/OYN049043

YN ENG 4(~99).QXP 4/16/2012 10:18 AM Page 42

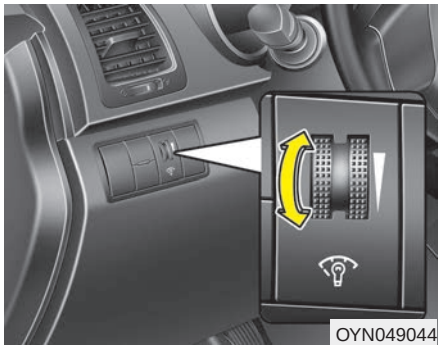

Instrument panel illumination (if equipped)

When the vehicle's parking lights or headlights are on, rotate the illumination control switch to adjust the instrument panel illumination intensity.

Gauges

Speedometer

The speedometer indicates the forward speed of the vehicle.

The speedometer is calibrated in kilometers per hour and/or miles per hour.

Tachometer

The tachometer indicates the approximate number of engine revolutions per minute (rpm).

Use the tachometer to select the correct shift points and to prevent lugging and/or over-revving the engine.

The tachometer pointer may move slightly when the ignition switch is in ACC or ON position with the engine OFF. This movement is normal and will not affect the accuracy of the tachometer once the engine is running.

⚠ CAUTION

Do not operate the engine within the tachometer's RED ZONE.

This may cause severe engine damage.

YN ENG 4(~99).QXP 4/16/2012 10:18 AM Page 43

Fuel gauge

The fuel gauge indicates the approximate amount of fuel remaining in the fuel tank. The fuel tank capacity is given in section 8. The fuel gauge is supplemented by a low fuel warning light, which will illuminate when the fuel tank is nearly empty.

On inclines or curves, the fuel gauge pointer may fluctuate or the low fuel warning light may come on earlier than usual due to the movement of fuel in the tank.

: The arrow indicates the fuel filler lid is in the left side of the vehicle.

⚠ WARNING - Fuel gauge

Running out of fuel can expose vehicle occupants to danger.

You must stop and obtain additional fuel as soon as possible after the warning light comes on or when the gauge indicator comes close to the "0" level.

⚠ CAUTION

Avoid driving with a very low fuel level. Running out of fuel could cause the engine to misfire, damaging the catalytic converter.

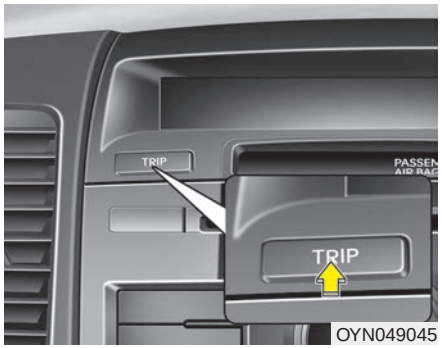

OYN049045

Odometer/Tripmeter (if equipped)

Odometer, tripmeter A or B can be selected by pressing the TRIP button for less than 1 second.



OYN049100

Odometer (km or mi.)

The odometer indicates the total distance the vehicle has been driven.

You will also find the odometer useful to determine when periodic maintenance should be performed.

✻ NOTICE

It is forbidden to alter the odometer of all vehicles with the intent to change the mileage registered on the odometer. The alteration may void your warranty coverage.

YN ENG 4(~99).QXP 4/16/2012 10:18 AM Page 44



Tripmeter (km or mi.)

TRIP A: Tripmeter A

TRIP B: Tripmeter B

This mode indicates the distance of individual trips selected since the last tripmeter reset.

The meter's working range is from 0.0 to 999.9 km (0.0 to 999.9 miles).

Pressing the TRIP button for more than 1 second, when the tripmeter (TRIP A or TRIP B) is being displayed, clears the tripmeter to zero (0.0).

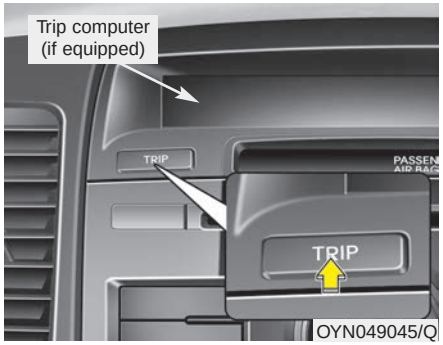

Tripmeter/Trip computer (if equipped)

The trip computer is a microcomputer-controlled driver information system that displays information related to driving, such as tripmeter, distance to empty, elapsed time, average fuel consumption and instant fuel consumption on the display when the ignition switch is in the ON position. All stored driving information (except distance to empty and instant fuel consumption) is reset if the battery is disconnected.

Press the TRIP button for less than 1 second to select any mode as follows:

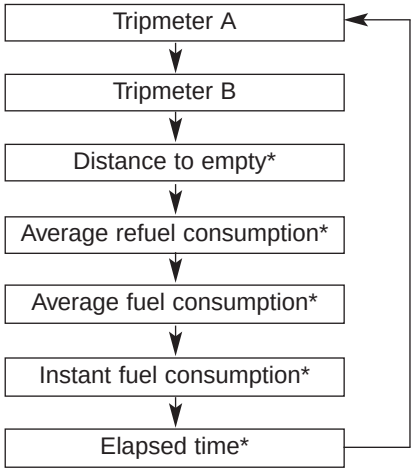

* if equipped

YN ENG 4(~99).QXP 4/16/2012 10:18 AM Page 45



OYN049130

Tripmeter (km or mi.)

TRIP A : Tripmeter A

TRIP B : Tripmeter B

This mode indicates the distance of individual trips selected since the last tripmeter reset.

The meter's working range is from 0.0 to 999.9 km (0.0 to 999.9 miles).

Pressing the TRIP button for more than 1 second, when the tripmeter (TRIP A or TRIP B) is being displayed, clears the tripmeter to zero (0.0).



OYN049102

Distance to empty (if equipped) (km or mi.)

This mode indicates the estimated distance to empty based on the current fuel in the fuel tank and the amount of fuel delivered to the engine. When the remaining distance is below 50 km (30 miles), "---" will be displayed and the distance to empty indicator will blink.

The meter's working range is from 50 to 990 km (30 to 990 miles).



OYN042204

Average refuel consumption (if equipped) (*l*/100 km or MPG)

This mode calculates the average fuel consumption from the total fuel used and the distance since the last tank refuel. The total fuel used is calculated from the fuel consumption input. For an accurate calculation, drive more than 50 m (0.03 miles).

The average refuel consumption resets to zero (--.-) when the vehicle is refueled.

YN ENG 4(~99).QXP 4/16/2012 10:18 AM Page 46



OYN042205

Average fuel consumption (if equipped) (*l*/100 km or MPG)

This mode calculates the average fuel consumption from the total fuel used and the distance since the last average consumption reset. The total fuel used is calculated from the fuel consumption input. For an accurate calculation, drive more than 50 m (0.03 miles).

Pressing the TRIP button for more than 1 second, when the average fuel consumption is being displayed, clears the average fuel consumption to zero (--.-).



OYN049104

Instant fuel consumption (if equipped) (*l*/100 km or MPG)

This mode calculates the instant fuel consumption during the last few seconds.

✻ NOTICE

- **If the vehicle is not on level ground or the battery power has been interrupted, the "Distance to empty" function may not operate correctly.**
  The trip computer may not register additional fuel if less than 6 liters (1.6 gallons) of fuel are added to the vehicle.
- **The fuel consumption and distance to empty values may vary significantly based on driving conditions, driving habits, and condition of the vehicle.**
- **The distance to empty value is an estimate of the available driving distance. This value may differ from the actual driving distance available.**

YN ENG 4(~99).QXP 4/16/2012 10:18 AM Page 47



OYN049105

Elapsed time (if equipped)

This mode indicates the total time traveled since the last driving time reset.

Even if the vehicle is not in motion, the driving time keeps going while the engine is running.

The meter's working range is from 0:00~99:59.

Pressing the TRIP button for more than 1 second, when the driving time is being displayed, clears the driving time to zero (0:00).

Warnings and indicators

All warning lights are checked by turning the ignition switch ON (do not start the engine). If any light that does not illuminate, we recommend that the system be checked by an authorized Kia dealer.

After starting the engine, check to make sure that all warning lights are off. If any are still on, this indicates a situation that needs attention. When releasing the parking brake, the brake system warning light should go off. The fuel warning light will stay on if the fuel level is low.

Air bag warning light (if equipped)



This warning light will illuminate for approximately 6 seconds each time you turn the ignition switch to the ON position.

This light also comes on when the Supplemental Restraint System (SRS) is not working properly. If the AIR BAG warning light does not come on, or continuously remains on after operating for about 6 seconds when you turned the ignition switch to the ON position or started the engine, or if it comes on while driving, we recommend that the system be inspected by an authorized Kia dealer.

For information about the passenger's front air bag ON/OFF indicator, refer to "Air bag - supplemental restraint system" in section 3.

YN ENG 4(~99).QXP 4/16/2012 10:18 AM Page 48

Anti-lock brake system (ABS) warning light (if equipped)



This warning light illuminates if the ignition switch is turned to ON and goes off in approximately 3 seconds if the system is operating normally.

If the ABS warning light remains on, comes on while driving, or does not come on when the ignition switch is turned to the ON position, this indicates that the ABS may have malfunctioned.

If this occurs, we recommend to have the system checked by an authorized Kia dealer. The normal braking system will still be operational, but without the assistance of the anti-lock brake system.

Electronic brake force distribution (EBD) system warning light





If two warning lights illuminate at the same time while driving, your vehicle may have a malfunction with ABS and EBD system.

In this case, your ABS and regular brake system may not work normally. We recommend that the system be checked by an authorized Kia dealer.

⚠ WARNING

If the both ABS and Brake warning lights are on and stay on, your vehicle's brake system will not work normally. So you may experience an unexpected and dangerous situation during sudden braking. In this case, avoid high speed driving and abrupt braking. We recommend that the system be checked by an authorized Kia dealer.

Seat belt warning



As a reminder to the driver and passenger, the seat belt warning light will blink or illuminate for approximately 6 seconds each time you turn the ignition switch ON regardless of belt fastening.

For details, refer to the seat belt on chapter 3.

YN ENG 4(~99).QXP 4/16/2012 10:18 AM Page 49

Engine oil pressure warning



This warning light indicates the engine oil pressure is low.

If the warning light illuminates while driving:

1. Drive safely to the side of the road and stop.
2. With the engine off, check the engine oil level. If the level is low, add oil as required.

If the warning light remains on after adding oil or if oil is not available, we recommend that you call an authorized Kia dealer.

⚠ CAUTION

If the engine is not stopped immediately after the engine oil pressure warning light is illuminated, severe damage could result.

⚠ CAUTION

If the oil pressure warning light stays on while the engine is running, serious engine damage may result. The oil pressure warning light comes on whenever there is insufficient oil pressure. In normal operation, it should come on when the ignition switch is turned on, then go out when the engine is started. If the oil pressure warning light stays on while the engine is running, there is a serious malfunction.

If this happens, stop the car as soon as it is safe to do so, turn off the engine and check the oil level. If the oil level is low, fill the engine oil to the proper level and start the engine again. If the light stays on with the engine running, turn the engine off immediately. In any instance where the oil light stays on when the engine is running, we recommend that the system be checked by an authorized Kia dealer.

Turn signal indicator



The blinking green arrows on the instrument panel show the direction indicated by the turn signals. If the arrow comes on but does not blink, blinks more rapidly than normal, or does not illuminate at all, it indicates a malfunction in the turn signal system. You should consult your dealer for repairs.

This indicator also blinks when the hazard warning switch is turned on.

High beam indicator



This indicator illuminates when the headlights are on and in the high beam position or when the turn signal lever is pulled into the Flash-to-Pass position.

YN ENG 4(~99).QXP 4/16/2012 10:18 AM Page 50

Front fog light indicator (if equipped)



This indicator comes on when the front fog lights are ON.

Rear fog light indicator (if equipped)



This indicator illuminates when the rear fog lights are ON.

Light on indicator (if equipped)



The indicator illuminates when the tail lights or headlights are ON.

Parking brake & brake fluid warning



Parking brake warning

This warning light is illuminated when the parking brake is applied with the ignition switch in the START or ON position. The warning light should go off when the parking brake is released.

The parking brake warning chime (if equipped) will sound to remind you that the parking brake is applied when you are driving above approximately 10 km/h (6 mph). Always release the parking brake before you drive.

Low brake fluid level warning

If the warning light remains on, it may indicate that the brake fluid level in the reservoir is low.

If the warning light remains on:

1. Drive carefully to the nearest safe location and stop your vehicle.
2. With the engine stopped, check the brake fluid level immediately and add fluid as required. Then check all brake components for fluid leaks.
3. Do not drive the vehicle if leaks are found, the warning light remains on or the brakes do not operate properly. We recommend that you contact an authorized Kia dealer.

Your vehicle is equipped with dual-diagonal braking systems. This means you still have braking on two wheels even if one of the dual systems should fail. With only one of the dual systems working, more than normal pedal travel and greater pedal pressure are required to stop the vehicle. Also, the vehicle will not stop in as short a distance with only a portion of the brake system working. If the brakes fail while you are driving, shift to a lower gear for additional engine braking and stop the vehicle as soon as it is safe to do so.

To check bulb operation, check whether the parking brake and brake fluid warning light illuminates when the ignition switch is in the ON position.

⚠ WARNING

Driving the vehicle with a warning light on is dangerous. If the brake warning light remains on, we recommend that the system be serviced by an authorized Kia dealer.

YN ENG 4(~99).QXP 4/16/2012 10:18 AM Page 51

Automatic transaxle shift position indicator (if equipped)



The indicator displays which automatic transaxle shift lever is selected.

Manual transaxle shift indicator (if equipped)



This indicator informs you which gear is desired while driving to save fuel.

For example

▲3: Indicates that shifting up to the 3rd gear is desired (currently the shift lever is in the 2nd or 1st gear).

▼3: Indicates that shifting down to the 3rd gear is desired (currently the shift lever is in the 4th or 5th gear).

When the system is not working properly, the indicator (Up & Down Arrow and gear) is not displayed.

Engine coolant temperature warning light



The warning light shows the temperature of the engine coolant when the ignition switch is ON.

The warning light illuminates if the temperature of the engine coolant is above 120±3°C (248±5.5°F).

Do not continue driving with an overheated engine. If your vehicle overheats, refer to “Overheating” in the Index.

✻ NOTICE

If the engine coolant temperature warning light illuminates, it indicates overheating that may damage the engine.

Charging system warning light



This warning light indicates a malfunction of either the generator or electrical charging system.

If the warning light illuminates on while the vehicle is in motion:

1. Drive to the nearest safe location.
2. With the engine off, check the generator drive belt for looseness or breakage.
3. If the belt is adjusted properly, a problem exists somewhere in the electrical charging system. We recommend that the system be checked by an authorized Kia dealer.

Electric power steering (EPS) system warning light (if equipped)

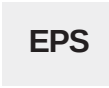

This warning light illuminates after the ignition key is turned to the ON position and then it will go off when the engine starts.

This light also comes on when the EPS has malfunctioned. If it comes on while driving, we recommend that the system be checked by an authorized Kia dealer.

YN ENG 4(~99).QXP 4/16/2012 10:18 AM Page 52

Door ajar warning light (if equipped)



This warning light illuminates when a door is not closed securely with the ignition switch in any position.

Tailgate open warning light (if equipped)



This warning light illuminates when the tailgate is not closed securely with the ignition switch in any position.

Door open position indicator (including tailgate, if equipped)



This indicator illuminates when a door is not closed securely.
The indicator displays which door is opened.

Immobilizer indicator (if equipped)



This light illuminates when the immobilizer key is inserted and turned to the ON position to start the engine.
At this time, you can start the engine. The light goes out after the engine is running.
If this light blinks when the ignition switch is in the ON position before starting the engine, we recommend that the system be checked by an authorized Kia dealer.

Low fuel level warning



This warning light indicates the fuel tank is nearly empty. When it comes on, you should add fuel as soon as possible. Driving with the fuel level warning light on or with the fuel level below “0” can cause the engine to misfire and damage the catalytic converter (if equipped).

Malfunction indicator lamp (MIL) (check engine light) (if equipped)

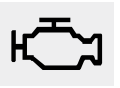

This indicator is part of the Engine Control System which monitors various emission control system components. If this indicator illuminates while driving, it indicates that a potential malfunction has been detected somewhere in the emission control system.
This indicator will also illuminates when the ignition switch is turned to the ON position, and will go off in a few seconds after the engine is started. If it illuminates while driving, or does not illuminate when the ignition switch is turned to the ON position, we recommend that you contact an authorized Kia dealer.
Generally, your vehicle will continue to be drivable, but we recommend that the system be checked by an authorized Kia dealer promptly.

YN ENG 4(~99).QXP 4/16/2012 10:18 AM Page 53

⚠ CAUTION

- ***Prolonged driving with the Emission Control System Malfunction Indicator Light illuminated may cause damage to the emission control systems which could effect drivability and/or fuel economy.***
- ***If the Emission Control System Malfunction Indicator Light illuminates, potential catalytic converter damage is possible which could result in loss of engine power. We recommend that the system be inspected by an authorized Kia dealer.***

⚠ CAUTION - Diesel engine

When the malfunction indicator light is blinks, it may stop blinking after driving the vehicle at more than 60km/h (37 mph) or at more than second gear with 1500 ~ 2000 engine rpm for a certain time (for about 25 minutes).

If the malfunction indicator light continues to be blinked in spite of the procedure, we recommend that the system be checked by an authorized Kia dealer.

If you continue to drive with the malfunction indicator light blinking for a long time, the DPF system can be damaged and fuel consumption can be worsen.

ESP (Electronic Stability Program) indicator (if equipped)



The ESP indicator will illuminate when the ignition switch is turned ON, but should go off after approximately 3 seconds. When the ESP is on, it monitors the driving conditions. Under normal driving conditions, the ESP indicator will remain off. When a slippery or low traction condition is encountered, the ESP will operate, and the ESP indicator will blink to indicate the ESP is operating.

But, if the ESP system malfunctions the indicator illuminates and stays on. We recommend that you contact an authorized Kia dealer.

YN ENG 4(~99).QXP 4/16/2012 10:18 AM Page 54

ESP OFF indicator (if equipped)



The ESP OFF indicator will illuminate when the ignition switch is turned ON, but should go off after approximately 3 seconds. To switch to ESP OFF mode, press the ESP OFF button. The ESP OFF indicator will illuminate indicating the ESP is deactivated.

✻ NOTICE

After reconnecting or recharging a discharged battery, the ESP OFF indicator may illuminate. In this case, turn the steering wheel 360 degrees to the left and 360 degrees to the right while the ignition switch is in the ON position. Then, restart the engine after the ignition is off. If the ESP OFF indicator does not turn off, we recommend that you contact an authorized Kia dealer.

Cruise indicator (if equipped)

CRUISE indicator



The indicator illuminates when the cruise control system is enabled.

The cruise indicator in the instrument cluster is illuminated when the cruise control ON-OFF button on the steering wheel is pushed.

The indicator goes off when the cruise control ON-OFF button is pushed again. For more information about the use of cruise control, refer to “Cruise control system” in section 5.

Cruise SET indicator



The indicator illuminates when the cruise control switch (SET- or RES+) is ON.

The cruise SET indicator in the instrument cluster is illuminated when the cruise control switch (SET- or RES+) is pushed.

The cruise SET indicator does not illuminate when the cruise control switch (CANCEL) is pushed or the system is disengaged.

Speed limit indicator (if equipped)



(1) Speed limit indicator
(2) Set speed limit indicator

The speed limit indicator illuminates when the speed limit control system is enabled.

The speed limit indicator in the instrument cluster illuminates when the speed limit ON-OFF button on the steering wheel is pressed.

If the " " indicator is shown in the instrument cluster, it indicates no setting of the speed limit.

The set speed limit will display when the speed limit control switch (SET-/RES+) is ON.

If you drive over the speed limit, the set speed limit will blink and chime will sound.

The set speed limit turns off when the speed limit is cancelled by pressing the CANCEL button.

The speed limit indicator goes off when the speed limit is deactivated.

For more information about the speed limit control usage, refer to “Speed Limit control System” in section 5.

YN ENG 4(~99).QXP 4/16/2012 10:18 AM Page 55

TPMS (Tire Pressure Monitoring System) indicator (if equipped)

Low tire pressure telltale / TPMS malfunction indicator



Low tire pressure position telltale



The low tire pressure telltale comes on for 3 seconds after the ignition switch is turned to the "ON" position.

The low tire pressure and position telltales illuminate when one or more of your tires is significantly underinflated.

The low tire pressure telltale will illuminate after it blinks for approximately one minute when there is a problem with the Tire Pressure Monitoring System.

If this occurs, we recommend that the system be checked by an authorized Kia dealer.

For details, refer to the TPMS on chapter 6.

⚠ WARNING

Significantly low tire pressure makes the vehicle unstable and can contribute to loss of vehicle control and increased braking distances.

Continued driving on low pressure tires will cause the tires to overheat and fail.

⚠ WARNING - Safe stopping

- **The TPMS cannot alert you to severe and sudden tire damage caused by external factors.**
- **If you feel any vehicle instability, immediately take your foot off the accelerator, apply the brakes gradually and with light force, and slowly move to a safe position off the road.**

AUTO STOP indicator (if equipped)

AUTO STOP

This indicator will illuminate when the engine enters the Idle Stop mode of the ISG (Idle Stop and Go) system.

When the automatic starting occurrs, the "AUTO STOP" indicator on the cluster will blink for 5 seconds.

For more details, refer to the ISG (Idle Stop and Go) system on the front of chapter 5.

✻ NOTICE

When the engine automatically starts by the ISG system, some warning lights(ABS, ESP, ESP OFF, EPS or Parking brake warning light) may turn on for a few seconds.

This happens because of the low battery voltage. It does not mean the system is malfunctioning.

YN ENG 4(~99).QXP 4/16/2012 10:18 AM Page 56

KEY OUT indicator (if equipped)

KEY OUT

When the ENGINE START/STOP button is in the ACC or ON position, if any door is open, the system checks for the smart key. If the smart key is not in the vehicle, the indicator will blink, and if all doors are closed, the chime (if equipped) will also sound for about 5 seconds. The indicator will go off while the vehicle is moving. Keep the smart key in the vehicle or insert it in the smart key holder.

Key reminder warning chime (if equipped)

If the driver's door is opened while the ignition key is left in the ignition switch (ACC or LOCK position), the key reminder warning chime will sound. This is to prevent you from locking your keys in the vehicle. The chime sounds until the key is removed from the ignition switch or the driver's door is closed.

Glow indicator (Diesel engine)



The indicator illuminates when the ignition switch is in the ON position. The engine can be started after the preheat indicator light goes off. The illuminating time varies with the water temperature, air temperature and battery condition.

✻ NOTICE

If the engine does not start within 10 seconds after the preheating is completed, turn the ignition key once more to the LOCK position for 10 seconds, and then to the ON position, in order to preheat again.

⚠ CAUTION

If the preheat indicator continues to illuminate or blink on and off after the engine has warmed up or while driving, we recommend that the system be checked by an authorized Kia dealer.

Fuel filter warning light (Diesel engine)



This warning light illuminates for 3 seconds after the ignition switch is set to the ON position and then it will go off. If it lights up while the engine is running, it indicates that water has accumulated inside the fuel filter. If this happens, remove the water from the fuel filter. For more information, refer to "Fuel filter" in section 7.

⚠ CAUTION

When the fuel filter warning light is illuminated, engine power (vehicle speed & idle speed) may decrease. If you keep driving with the warning light on, you can damage your vehicle's engine parts and injection system of the Common Rail.

If this occurs, we recommend that the system be checked by an authorized Kia dealer.

YN ENG 4(~99).QXP 4/16/2012 10:18 AM Page 57

REAR PARKING ASSIST SYSTEM (IF EQUIPPED)

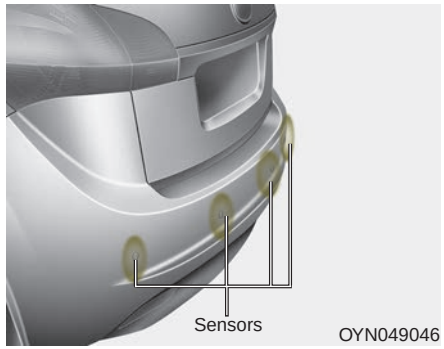

OYN049046

The rear parking assist system assists the driver during backward movement of the vehicle by chiming if any object is sensed within a distance of 120 cm (47 in.) behind the vehicle. This system is a supplemental system and it is not intended to nor does it replace the need for extreme care and attention of the driver. The sensing range and objects detectable by the back sensors are limited. Whenever backing-up, pay as much attention to what is behind you as you would in a vehicle without a rear parking assist system.

⚠ WARNING

The rear parking assist system is a supplementary function only. The operation of the rear parking assist system can be affected by several factors (including environmental conditions). It is the responsibility of the driver to always check the area behind the vehicle before and while backing up.

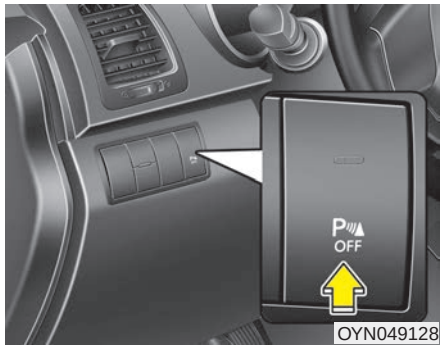

OYN049128

Operation of the rear parking assist system

Operating condition

- This system will activate when the indicator on the rear parking assist OFF button is not illuminated. If you desire to deactivate the rear parking assist system, press the rear parking assist OFF button again. (The indicator on the button will illuminate.) To turn the system on, press the button again. (The indicator on the button will go off.)
- This system will activate when backing up with the ignition switch ON.

  If the vehicle is moving at a speed over 5 km/h (3 mph), the system may not be activated correctly.

YN ENG 4(~99).QXP 4/16/2012 10:18 AM Page 58

- The sensing distance while the rear parking assist system is in operation is approximately 120 cm (47 in.).
- When more than two objects are sensed at the same time, the closest one will be recognized first.

Types of warning sound

- When an object is 120 cm to 81 cm (47 in. to 32 in.) from the rear bumper: Buzzer beeps intermittently
- When an object is 80 cm to 41 cm (31 in. to 16 in.) from the rear bumper: Buzzer beeps more frequently
- When an object is within 40 cm (15 in.) of the rear bumper:
  Buzzer sounds continuously.

Non-operational conditions of rear parking assist system

The rear parking assist system may not operate properly when:

1. Moisture is frozen to the sensor. (It will operate normally when the moisture has been cleared.)
2. The sensor is covered with foreign matter, such as snow or water, or the sensor cover is blocked. (It will operate normally when the material is removed or the sensor is no longer blocked.)
3. Driving on uneven road surfaces (unpaved roads, gravel, bumps, gradient).
4. Objects generating excessive noise (vehicle horns, loud motorcycle engines, or truck air brakes) are within range of the sensor.
5. Heavy rain or water spray exists.
6. Wireless transmitters or mobile phones are within range of the sensor.
7. The sensor is covered with snow.
8. Trailer towing.

The detecting range may decrease when:

1. The sensor is stained with foreign matter such as snow or water. (The sensing range will return to normal when removed.)
2. Outside air temperature is extremely hot or cold.

The following objects may not be recognized by the sensor:

1. Sharp or slim objects such as ropes, chains or small poles.
2. Objects which tend to absorb the sensor frequency such as clothes, spongy material or snow.
3. Undetectable objects smaller than 1 m (40 in.) and narrower than 14 cm (6 in.) in diameter.

YN ENG 4(~99).QXP 4/16/2012 10:18 AM Page 59

Rear parking assist system precautions

- The rear parking assist system may not sound sequentially depending on the speed and shapes of the objects detected.
- The rear parking assist system may malfunction if the vehicle bumper height or sensor installation has been modified or damaged. Any non-factory installed equipment or accessories may also interfere with the sensor performance.
- The sensor may not recognize objects less than 40 cm (15 in.) from the sensor, or it may sense an incorrect distance. Use caution.
- When the sensor is frozen or stained with snow, dirt, or water, the sensor may be inoperative until the stains are removed using a soft cloth.
- Do not push, scratch or strike the sensor. Sensor damage could occur.

✻ NOTICE

This system can only sense objects within the range and location of the sensors; It can not detect objects in other areas where sensors are not installed. Also, small or slim objects, such as poles or objects located between sensors may not be detected by the sensors.
Always visually check behind the vehicle when backing up.
Be sure to inform any drivers of the vehicle that may be unfamiliar with the system regarding the systems capabilities and limitations.

⚠ WARNING

Pay close attention when the vehicle is driven close to objects on the road, particularly pedestrians, and especially children. Be aware that some objects may not be detected by the sensors, due to the object's distance, size or material, all of which can limit the effectiveness of the sensor. Always perform a visual inspection to make sure the vehicle is clear of all obstructions before moving the vehicle in any direction.

Self-diagnosis

If you don't hear an audible warning sound or if the buzzer sounds intermittently when shifting the gear to the R (Reverse) position in operating condition, this may indicate a malfunction in the rear parking assist system. If this occurs, we recommend that the system be checked by an authorized Kia dealer.

⚠ WARNING

Your new vehicle warranty does not cover any accidents or damage to the vehicle or injuries to its occupants due to a rear parking assist system malfunction. Always drive safely and cautiously.

YN ENG 4(~99).QXP 4/16/2012 10:18 AM Page 60

REARVIEW CAMERA (IF EQUIPPED)

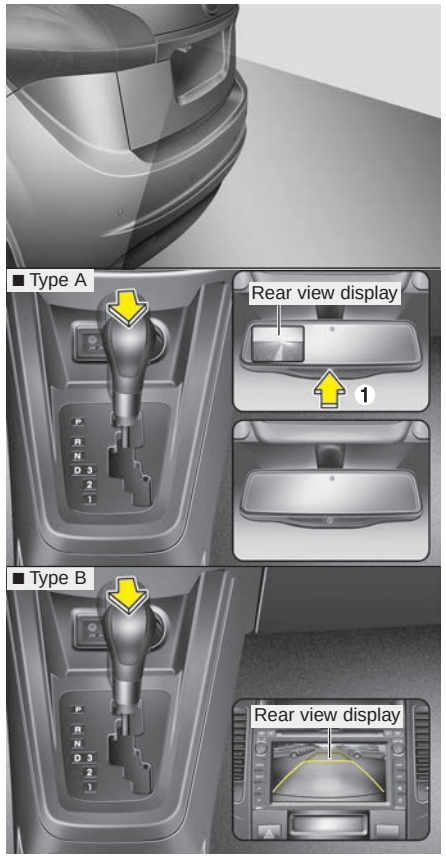

OYN049134/OYN049135/OYN049140

The rearview camera will activate when the back-up light is ON with the ignition switch ON and the shift lever in the R (Reverse) position.

This system is a supplemental system that shows behind the vehicle through the rearview display mirror while backing-up.

The rearview camera may be turned off by pressing the ON/OFF button (1) when the rearview camera is activated.

To turn the camera on again, press the ON/OFF button (1) again when the ignition switch is on and the shift lever in R (Reverse). Also, the camera will turn on automatically whenever the ignition switch is turned off and on again.

Detailed information for the rearview camera (Type B) is described in a separately supplied manual.

✻ NOTICE

The warning "Warning ! Check surroundings for safety " will appear on the rearview display when the rearview camera is activated.

⚠ WARNING

- **This system is a supplementary function only. It is the responsibility of the driver to always check the inside/outside rearview mirror and the area behind the vehicle before and while backing up because there is a dead zone that can't see through the camera.**
- **Always keep the camera lens clean. If lens is covered with foreign matter, the camera may not operate normally.**

YN ENG 4(~99).QXP 4/16/2012 10:18 AM Page 61

HAZARD WARNING FLASHER

■ Type A

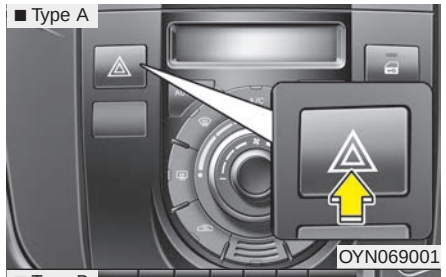

OYN069001

■ Type B

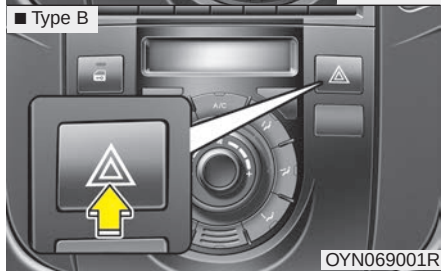

OYN069001R

The hazard warning flasher should be used whenever you find it necessary to stop the vehicle in a hazardous location. When you must make such an emergency stop, always pull off the road as far as possible.

The hazard warning lights are turned on by pushing in the hazard switch. Both turn signal lights will blink. The hazard warning lights will operate even though the key is not in the ignition switch.

To turn the hazard warning lights off, push the switch again.

LIGHTING

Battery saver function

- The purpose of this feature is to prevent the battery from being discharged. The system automatically turns off the parking lights when the driver removes the ignition key and opens the driver-side door.
- With this feature, the parking lights will turn off automatically if the driver parks on the side of road at night.

  If necessary, to keep the lights on when the ignition key is removed, perform the following:

  1) Open the driver-side door.
  2) Turn the parking lights OFF and ON again using the light switch on the steering column.

Headlight escort function (if equipped)

If you turn the ignition switch to the ACC or OFF position with the headlights ON, the headlights (and/or tail lights) remain on for about 20 minutes. However, if the driver's door is opened and closed, the headlights are turned off after 30 seconds.

The headlights can be turned off by pressing the lock button on the transmitter (or smart key) twice or turning the light switch to the OFF or Auto position.

However, if you turn the light switch to the Auto position when it is dark outside, the headlights will not be turned off.

⚠ CAUTION

If the driver gets out of the vehicle through other doors (except driver's door), the battery saver function does not operate and the headlight escort function does not turn off automatically. Therefore, It causes the battery to be discharged. In this case, make sure to turn off the lamp before getting out of the vehicle.

YN ENG 4(~99).QXP 4/16/2012 10:19 AM Page 62

Headlight welcome function (if equipped)

When the headlight switch is in the ON or AUTO position and all doors (and tailgate) are closed and locked, if you press the door unlock button on the transmitter (or smart key), the headlights will come on for about 15 seconds.

If the headlight switch is in the AUTO position, the function can only operate at night.

At this time, if you press the door unlock button again or door lock button on the transmitter (or smart key), the headlights will turn off immediately.



OED040045

Lighting control

The light switch has a Headlight and a Parking light position.

To operate the lights, turn the knob at the end of the control lever to one of the following positions:

(1) OFF position
(2) Parking light position
(3) Headlight position
(4) Auto light position (if equipped)



OED040046

Parking light position ( )

When the light switch is in the parking light position (1st position), the tail position, license and instrument panel lights will turn ON.

YN ENG 4(~99).QXP 4/16/2012 10:19 AM Page 63



OED040800

Headlight position ( )

When the light switch is in the headlight position (2nd position), the head, tail, position, license and instrument panel lights are ON.

✻ NOTICE

The ignition switch must be in the ON position to turn on the headlights.

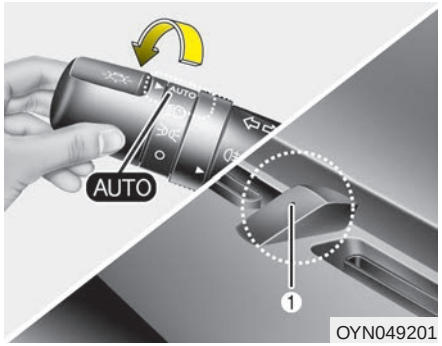

OYN049201

Auto light position (if equipped)

When the light switch is in the AUTO light position, the taillights and headlights will be turned ON or OFF automatically depending on the amount of light outside the vehicle.

⚠ CAUTION

- ***Never place anything over sensor (1) located on the instrument panel, this will ensure better auto-light system control.***
- ***Don't clean the sensor using a window cleaner, the cleanser may leave a light film which could interfere with sensor operation.***
- ***If your vehicle has window tint or other types of metallic coating on the front windshield, the Auto light system may not work properly.***



OED040801

High beam operation

To turn on the high beam headlights, push the lever away from you. Pull it back for low beams.

The high beam indicator will light when the headlight high beams are switched on.

To prevent the battery from being discharged, do not leave the lights on for a prolonged time while the engine is not running.

⚠ WARNING

Do not use high beam when there are other vehicles. Using high beam could obstruct the other driver's vision.

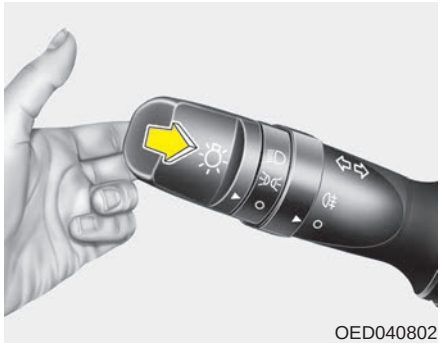

OED040802

To flash the headlights, pull the lever towards you. It will return to the normal (low beam) position when released. The headlight switch does not need to be on to use this flashing feature.

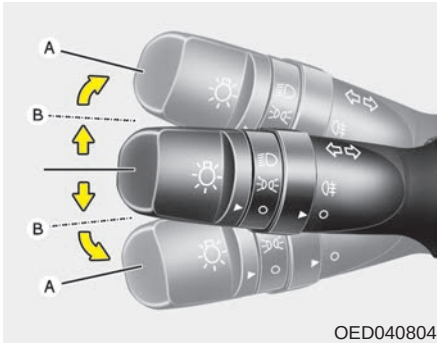

OED040804

Turn signals and lane change signals

The ignition switch must be on for the turn signals to function. To turn on the turn signals, move the lever up or down (A). The green arrow indicators on the instrument panel indicate which turn signal is operating. They will self-cancel after a turn is completed. If the indicator continues to flash after a turn, manually return the lever to the O (OFF) position.

YN ENG 4(~99).QXP 4/16/2012 10:19 AM Page 65

To signal a lane change, move the turn signal lever slightly and hold it in position (B). The lever will return to the O (OFF) position when released.

If an indicator stays on and does not flash or if it flashes abnormally, one of the turn signal bulbs may be burned out and will require replacement.

✻ NOTICE

If an indicator flash is abnormally quick or slow, a bulb may be burned out or have a poor electrical connection in the circuit.



OYN049200

Front fog light (if equipped)

Fog lights are used to provide improved visibility when visibility is poor due to fog, rain or snow, etc. The fog lights will turn on when the fog light switch (1) is turned on after the parklight is turned on and the ignition is on.

To turn off the fog lights, turn the fog light switch (1) to the O (OFF) position.

⚠ CAUTION

When in operation, the fog lights consume large amounts of vehicle electrical power. Only use the fog lights when visibility is poor.

■ Type A



OED040806

■ Type B



OAM049046L

Rear fog light (if equipped)

To turn the rear fog lights on, turn the rear fog light switch (1) to the on position when the headlight is turned on.

The rear fog lights turn on when the rear fog light switch is turned on after the front fog light switch (if equipped) is turned on and the headlight switch is in the park-light position.

To turn the rear fog lights off, turn the rear fog light switch to the on position again.

YN ENG 4(~99).QXP 4/16/2012 10:19 AM Page 66

Daytime running light (if equipped)

The Daytime Running Lights (DRL) can make it easier for others to see the front of your vehicle during the day. DRL can be helpful in many different driving conditions, and it is especially helpful after dawn and before sunset.

The DRL system will make the headlights turn OFF when:

1. The parklight switch is ON.
2. The engine is OFF.

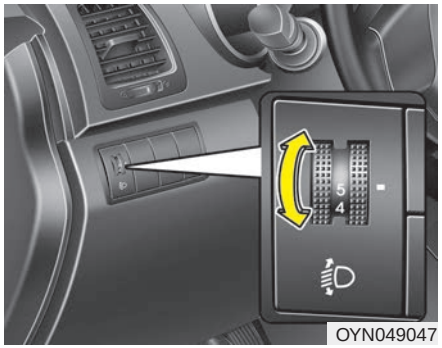

Headlight leveling device (if equipped)

To adjust the headlight beam level according to the number of the passengers and loading weight in the luggage area, turn the beam leveling switch.

The higher the number of the switch position, the lower the headlight beam level. Always keep the headlight beam at the proper leveling position, or headlights may dazzle other road users.

Listed below are the examples of proper switch settings. For loading conditions other than those listed below, adjust the switch position so that the beam level may be the nearest as the condition obtained according to the list.

Loading condition	Switch position
Driver only	0
Driver + Front passenger	0
Full passengers (including driver)	1
Full passengers (including driver) + Maximum permissible loading	3
Driver + Maximum permissible loading	5

YN ENG 4(~99).QXP 4/16/2012 10:19 AM Page 67

WIPERS AND WASHERS

■ Front

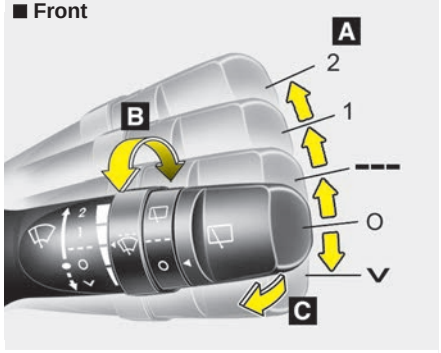

■ Rear (if equipped)

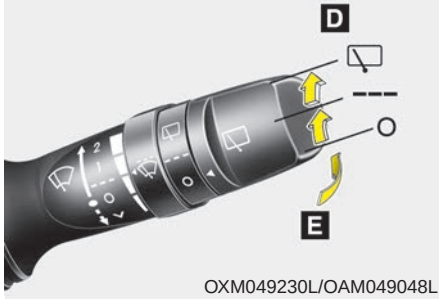

OXM049230L/OAM049048L

A : Wiper speed control (front)
- 2 – High wiper speed
- 1 – Low wiper speed
- --- – Intermittent wipe
- O – Off
- ∨ – Single wipe

B : Intermittent control wipe time adjustment

C : Wash with brief wipes (front)

D : Rear wiper/washer control
- – Continuous wipe
- --- – Intermittent wipe
- O – Off

E : Wash with brief wipes (rear)

Windshield wipers (front)

Operates as follows when the ignition switch is turned ON.

∨ : For a single wiping cycle, move the lever to this position and release it with the lever in the OFF position. The wipers will operate continuously if the lever is held in this position.

O : Wiper is not in operation

--- : Wiper operates intermittently at the same wiping intervals. Use this mode in a light rain or mist. To vary the speed setting, turn the speed control knob.

1 : Normal wiper speed

2 : Fast wiper speed

✻ NOTICE

If there is heavy accumulation of snow or ice on the windshield, defrost the windshield for about 10 minutes, or until the snow and/or ice is removed before using the windshield wipers to ensure proper operation.

YN ENG 4(~99).QXP 4/16/2012 10:19 AM Page 68

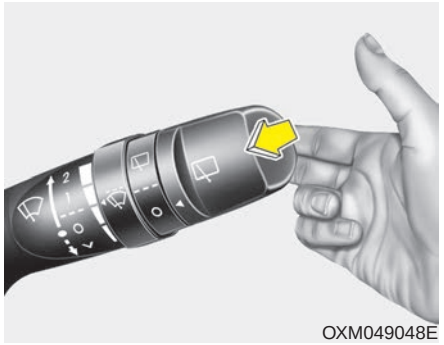

OXM049048E

Windshield washers (front)

In the O (OFF) position, pull the lever gently toward you to spray washer fluid on the windshield and to run the wipers 1-3 cycles.

Use this function when the windshield is dirty.

The spray and wiper operation will continue until you release the lever.

If the washer does not work, check the washer fluid level. If the fluid level, you will need to add appropriate non-abrasive windshield washer fluid to the washer reservoir.

The reservoir filler neck is located in the front of the engine compartment on the passenger side.

⚠ CAUTION

To prevent possible damage to the washer pump, do not operate the washer when the fluid reservoir is empty.

⚠ WARNING

Do not use the washer in freezing temperatures without first warming the windshield with the defrosters; the washer solution could freeze on the windshield and obscure your vision.

⚠ CAUTION

- ***To prevent possible damage to the wipers or windshield, do not operate the wipers when the windshield is dry.***
- ***To prevent damage to the wiper blades, do not use gasoline, kerosene, paint thinner, or other solvents on or near them.***
- ***To prevent damage to the wiper arms and other components, do not attempt to move the wipers manually.***

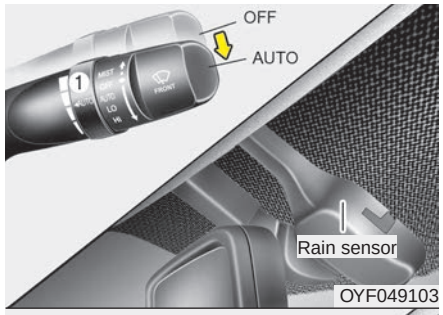

OYF049103

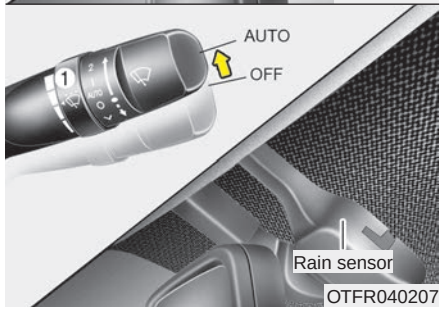

OTFR040207

Auto control (if equipped)

The rain sensor located on the upper end of the windshield glass senses the amount of rainfall and controls the wiping cycle for the proper interval. The more it rains, the faster the wiper operates. When the rain stops, the wiper stops.

To vary the speed setting, turn the speed control knob (1).

YN ENG 4(~99).QXP 4/16/2012 10:19 AM Page 69

If the wiper switch is set in AUTO mode when the ignition switch is ON, the wiper will operate once to perform a self-check of the system. Set the wiper to OFF position when the wiper is not in use.

⚠ CAUTION

When the ignition switch is ON and the windshield wiper switch is placed in the AUTO mode, use caution in the following situations to avoid any injury to the hands or other parts of the body:

- ***Do not touch the upper end of the windshield glass facing the rain sensor.***
- ***Do not wipe the upper end of the windshield glass with a damp or wet cloth.***
- ***Do not put pressure on the windshield glass.***

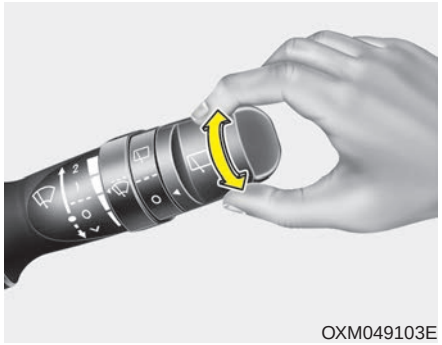

OXM049103E

Rear window wiper and washer switch

The rear window wiper and washer switch is located at the end of the wiper and washer switch lever. Turn the switch to desired position to operate the rear wiper and washer.

- - Normal wiper operation
- --- - Intermittent wipe
- O - Wiper is not in operation

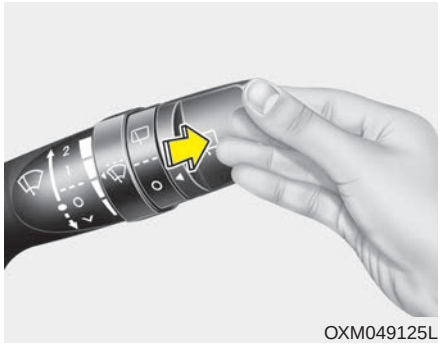

OXM049125L

Push the lever away from you to spray rear washer fluid and to run the rear wipers 1~3 cycles. The spray and wiper operation will continue until you release the lever.

YN ENG 4(~99).QXP 4/16/2012 10:20 AM Page 70

INTERIOR LIGHT

■ Type A

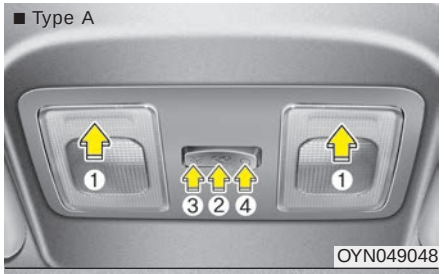

OYN049048

■ Type B

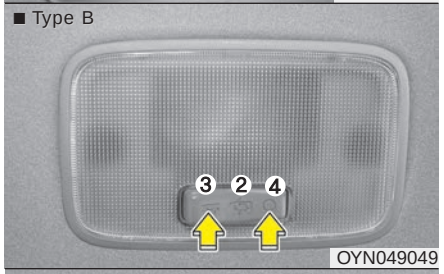

OYN049049

■ Type C

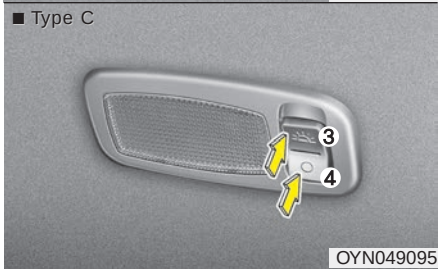

OYN049095

Room lamp

(1) Map lamp (if equipped)

Push the lamp lens to turn the light on or off. This light produces a spot beam for convenient use as a map lamp at night or as a personal lamp for the driver and the front passenger.

(2) DOOR

The light comes on when any door is opened regardless of the ignition switch position. When doors are unlocked by the transmitter or the key is removed from the ignition switch, the light comes on for approximately 30 seconds as long as any door is not opened.

The light goes out gradually after approximately 30 seconds if the door is closed. However, if the ignition switch is ON or all doors are locked, the light will turn off immediately.

If a door is opened with the ignition switch in the ACC or LOCK position, the light stays on for about 20 minutes. However, if a door is opened with the ignition switch in the ON position, the light stays on continuously.

(3) ON

In the ON position, the light stays on at all times.

(4) OFF

In the OFF position, the light stays off at all times, even when a door is open.

⚠ CAUTION

Do not use the interior lights for extended periods when engine is not running.

It may cause battery discharge.

⚠ WARNING

Do not use the interior lights when driving in the dark. Accidents could happen because the view may be obscured by interior lights.

Automatic turn off function (if equipped)

The interior lights automatically turn off approximately 20 minutes after the ignition switch is turned off.

If your vehicle is equipped with the theft alarm system, the interior lights automatically turns off approximately 3 seconds after the system is armed stage.

YN ENG 4(~99).QXP 4/16/2012 10:20 AM Page 71

DEFROSTER

⚠ CAUTION

To prevent damage to the conductors bonded to the inside surface of the rear window, never use sharp instruments or window cleaners containing abrasives to clean the window.

✻ NOTICE

If you want to defrost and defog the front windshield, refer to "Windshield defrosting and defogging" in this section.

■ Type A



OYN049050

■ Type B

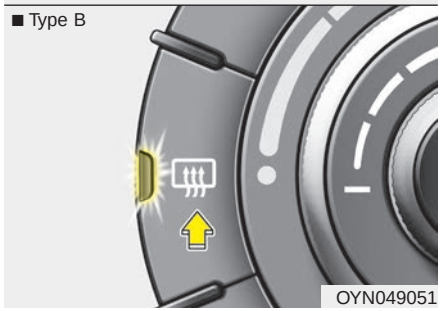

OYN049051

Rear window defroster

The defroster heats the window to remove frost, fog and thin ice from the interior and exterior of the rear window, while engine is running.

To activate the rear window defroster, press the rear window defroster button located in the center facia switch panel.

The indicator on the rear window defroster button illuminates when the defroster is ON.

If there is heavy accumulation of snow on the rear window, brush it off before operating the rear defroster.

The rear window defroster automatically turns off after approximately 20 minutes or when the ignition switch is turned off.

To turn off the defroster, press the rear window defroster button again.

Outside mirror defroster (if equipped)

If your vehicle is equipped with outside mirror defrosters, they will operate at the same time when you turn on the rear window defroster.

Front windshield deicer (if equipped)

If your vehicle is equipped with front windshield deicer, they will operate at the same time when you turn on the rear window defroster.

YN ENG 4(~99).QXP 4/16/2012 10:20 AM Page 72

MANUAL CLIMATE CONTROL SYSTEM (IF EQUIPPED)



1. Air conditioning button (if equipped)
2. Air intake control button
3. Rear window defroster button
4. Mode selection button
5. Temperature control knob
6. Fan speed control knob

OYN049052

YN ENG 4(~99).QXP 4/16/2012 10:20 AM Page 73

Heating and air conditioning

1. Start the engine.
2. Set the mode to the desired position.
   To improve the effectiveness of heating and cooling :
   - Heating:
   - Cooling:
3. Set the temperature control to the desired position.
4. Set the air intake control to the outside (fresh) air position.
5. Set the fan speed control to the desired speed.
6. If air conditioning is desired, turn the air conditioning system (if equipped) on.

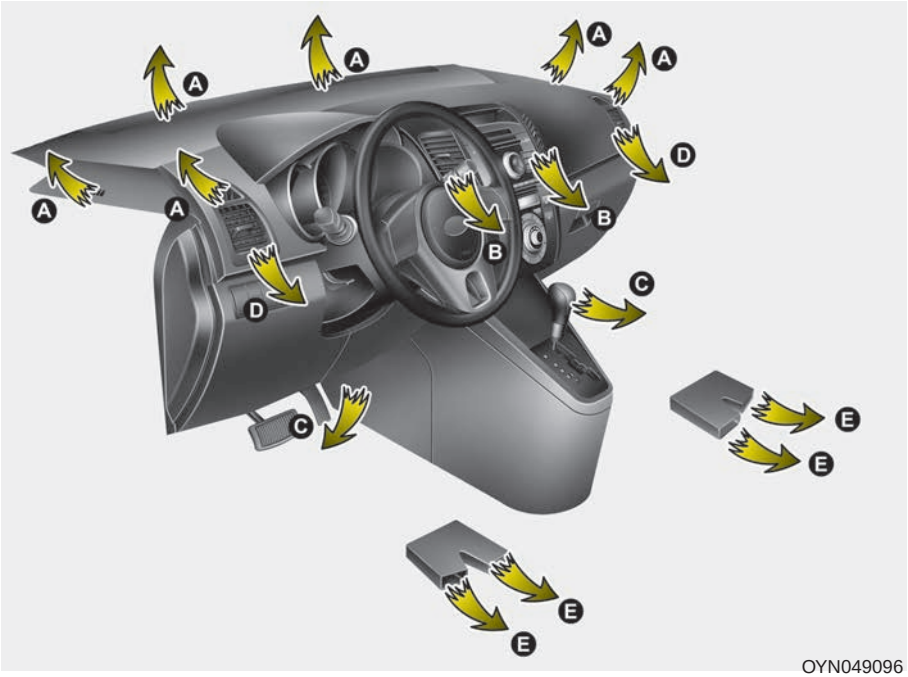

OYN049096

YN ENG 4(~99).QXP 4/16/2012 10:20 AM Page 74

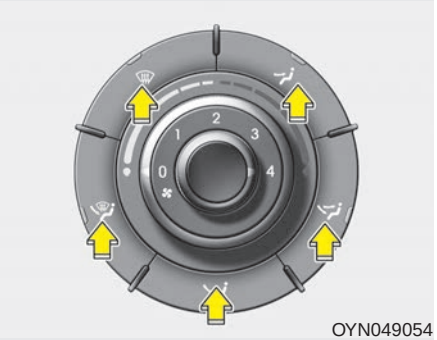

OYN049054

Mode selection

The mode selection button controls the direction of the air flow through the ventilation system.

Air can be directed to the floor, dashboard outlets, or windshield. Five symbols are used to represent Face, Bi-Level, Floor, Floor-Defrost and Defrost air position.

Face-Level (B, D)

Air flow is directed toward the upper body and face. Additionally, each outlet can be controlled to direct the air discharged from the outlet.

Bi-Level (B, D, C, E)

Air flow is directed towards the face and the floor.

Floor-Level (C, E, A, D)

Most of the air flow is directed to the floor, with a small amount of the air being directed to the windshield and side window defrosters.

Floor/Defrost-Level (A, C, E, D)

Most of the air flow is directed to the floor and the windshield with a small amount directed to the side window defrosters.

Defrost-Level (A, D)

Most of the air flow is directed to the windshield with a small amount of air directed to the side window defrosters.

YN ENG 4(~99).QXP 4/16/2012 10:20 AM Page 75

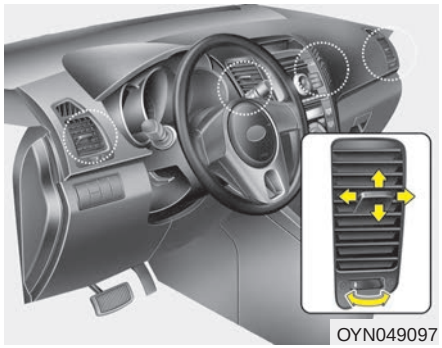
OYN049097

Instrument panel vents

The outlet vents can be opened or closed separately using the thumbwheel. To close the vent, rotate it left to the maximum position.

Also, you can adjust the direction of air delivery from these vents using the vent control lever as shown.

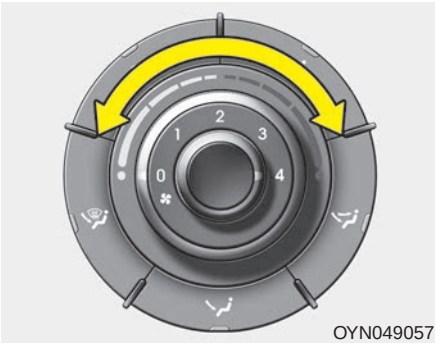

OYN049057

Temperature control

The temperature control knob allows you to control the temperature of the air flowing from the ventilation system. To change the air temperature in the passenger compartment, turn the knob to the right position for warm and hot air or left position for cooler air.

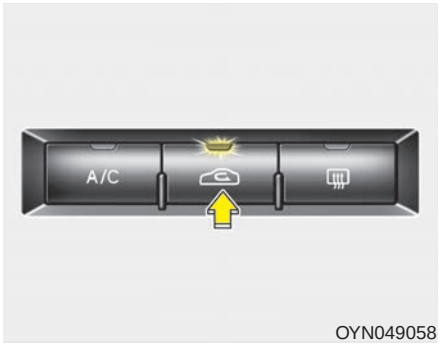

OYN049058

Air intake control

This is used to select outside (fresh) air position or recirculated air position.

To change the air intake control position, push the control button.

YN ENG 4(~99).QXP 4/16/2012 10:20 AM Page 76

Recirculated air position



The indicator light on the button illuminates when the recirculated air position is selected.

With the recirculated air position selected, air from the passenger compartment will be drawn through the heating system and heated or cooled according to the function selected.

Outside (fresh) air position



The indicator light on the button does not illuminate when the outside (fresh) air position is selected.

With the outside (fresh) air position selected, air enters the vehicle from outside and is heated or cooled according to the function selected.

✻ NOTICE

Prolonged operation of the heater in the recirculated air position (without air conditioning selected) may cause fogging of the windshield and side windows and the air within the passenger compartment may become stale.

In addition, prolonged use of the air conditioning with the recirculated air position selected will result in excessively dry air in the passenger compartment.

⚠ WARNING

- **Continuous operation of the climate control system in the recirculated air position may allow humidity to increase inside the vehicle which may fog the glass and obscure visibility.**
- **Do not sleep in a vehicle with air conditioning or heating system on. It may cause serious harm or death due to a drop in the oxygen level and/or body temperature.**
- **Continuous operation of the climate control system in the recirculated air position can cause drowsiness or sleepiness, and loss of vehicle control. Set the air intake control to the outside (fresh) air position as much as possible while driving.**

YN ENG 4(~99).QXP 4/16/2012 10:21 AM Page 77

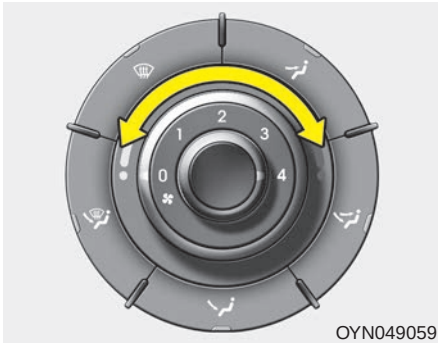

OYN049059

Fan speed control

The ignition switch must be in the ON position for fan operation.

The fan speed control knob allows you to control the fan speed of the air flowing from the ventilation system. To change the fan speed, turn the knob to the right for higher speed or left for lower speed.

Setting the fan speed control knob to the “0” position turns off the fan.

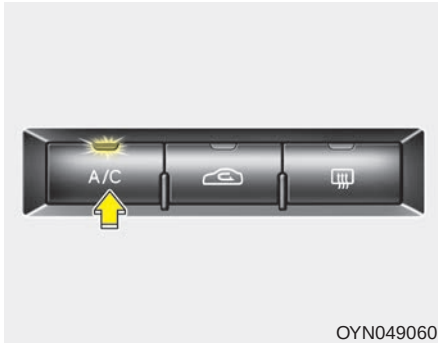

OYN049060

Air conditioning (if equipped)

Press the A/C button to turn the air conditioning system on (indicator light will illuminate) and set the fan speed control knob to the first position or higher. Press the button again to turn the air conditioning system off.

System operation

Ventilation

1. Set the mode to the position.
2. Set the air intake control to the outside (fresh) air position.
3. Set the temperature control to the desired position.
4. Set the fan speed control to the desired speed.

Heating

1. Set the mode to the position.
2. Set the air intake control to the outside (fresh) air position.
3. Set the temperature control to the desired position.
4. Set the fan speed control to the desired speed.
5. If dehumidified heating is desired, turn the air conditioning system (if equipped) on.

- If the windshield fogs up, set the mode to the or position.

YN ENG 4(~99).QXP 4/16/2012 10:21 AM Page 78

Operation Tips

- To keep dust or unpleasant fumes from entering the car through the ventilation system, temporarily set the air intake control to the recirculated air position. Be sure to return the control to the fresh air position when the irritation has passed to keep fresh air in the vehicle. This will help keep the driver alert and comfortable.
- Air for the heating/cooling system is drawn in through the grilles just ahead of the windshield. Care should be taken that these are not blocked by leaves, snow, ice or other obstructions.
- To prevent interior fog on the windshield, set the air intake control to the fresh air position and fan speed to the desired position, turn on the air conditioning system, and adjust the temperature control to desired temperature.

Air conditioning (if equipped)

All Kia Air Conditioning Systems are filled with environmentally friendly R-134a refrigerant which does not damage the ozone layer.

1. Start the engine. Push the air conditioning button.
2. Set the mode to the position.
3. Set the air intake control to the outside air or recirculated air position.
4. Adjust the fan speed control and temperature control to maintain maximum comfort.

✻ NOTICE

- **When using the air conditioning system, monitor the temperature gauge closely while driving up hills or in heavy traffic when outside temperatures are high. Air conditioning system operation may cause engine overheating. Continue to use the blower fan but turn the air conditioning system off if the temperature gauge indicates engine overheating.**
- **When opening the windows in humid weather air conditioning may create water droplets inside the vehicle. Since excessive water droplets may cause damage to electrical equipment, air conditioning should only be run with the windows closed.**

Air conditioning system operation tips

- If the vehicle has been parked in direct sunlight during hot weather, open the windows for a short time to let the hot air inside the vehicle escape.
- To help reduce moisture inside of the windows on rainy or humid days, decrease the humidity inside the vehicle by operating the air conditioning system.

YN ENG 4(~99).QXP 4/16/2012 10:21 AM Page 79

- During air conditioning system operation, you may occasionally notice a slight change in engine speed as the air conditioning compressor cycles. This is a normal system operation characteristic.
- Use the air conditioning system every month only for a few minutes to ensure maximum system performance.
- When using the air conditioning system, you may notice clear water dripping (or even puddling) on the ground under the passenger side of the vehicle. This is a normal system operation characteristic.
- Operating the air conditioning system in the recirculated air position provides maximum cooling, however, continual operation in this mode may cause the air inside the vehicle to become stale.
- During cooling operation, you may occasionally notice a misty air flow because of rapid cooling and humid air intake. This is a normal system operation characteristics.

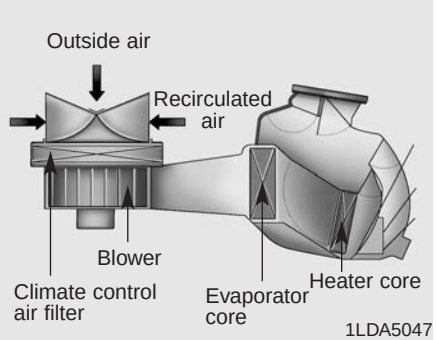

Climate control air filter (if equipped)

The climate control air filter installed behind the glove box filters the dust or other pollutants that come into the vehicle from the outside through the heating and air conditioning system. If dust or other pollutants accumulate in the filter over a period of time, the air flow from the air vents may decrease, resulting in moisture accumulation on the inside of the windshield even when the outside (fresh) air position is selected. If this happens, we recommend the climate control air filter be replaced by an authorized Kia dealer.

✻ NOTICE

- **Replace the filter according to the Maintenance Schedule.**
  If the vehicle is being driven in severe conditions such as dusty, rough roads, more frequent climate control air filter inspections and changes are required.
- **When the air flow rate is suddenly decreases, we recommend that the system be checked by an authorized Kia dealer.**

YN ENG 4(~99).QXP 4/16/2012 10:21 AM Page 80

Checking the amount of air conditioner refrigerant and compressor lubricant

When the amount of refrigerant is low, the performance of the air conditioning is reduced. Overfilling also has a negative influence on the air conditioning system.

Therefore, if abnormal operation is found, we recommend that the system be inspected by an authorized Kia dealer.

✻ NOTICE

It is important that the correct type and amount of oil and refrigerant is used. Otherwise, damage to the compressor and abnormal system operation may occur.

⚠ WARNING

We recommend that the system be serviced by an authorized Kia dealer. Improper service may cause serious injury to the person performing the service.

YN ENG 4(~99).QXP 4/16/2012 10:21 AM Page 81

AUTOMATIC CLIMATE CONTROL SYSTEM (IF EQUIPPED)



1. AUTO (automatic control) button
2. A/C display
3. OFF button
4. Air conditioning button
5. Front windshield defrost button
6. Rear window defroster button
7. Air intake control button
8. Mode selection button
9. Temperature control knob
10. Fan speed control knob

OYN049062

YN ENG 4(~99).QXP 4/16/2012 10:21 AM Page 82



OYN049063

Automatic heating and air conditioning

1. Push the AUTO button. It is indicated by AUTO on the display. The modes, fan speeds, air intake and air-conditioning will be controlled automatically by temperature setting.

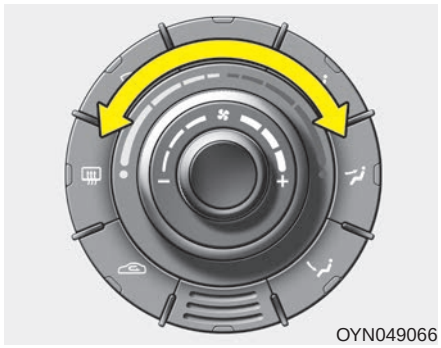
OYN049066

2. Turn the temperature control knob to set the desired temperature.

✻ NOTICE

- **To turn the automatic operation off, select any button of the following:**
  - **Mode selection button**
  - **Front windshield defrost button**
  - **Fan speed control button**

  The selected function will be controlled manually while other functions operate automatically.
- **For your convenience and to improve the effectiveness of the climate control, use the AUTO button and set the temperature to 22°C/71°F (23°C/73°F -Except Europe).**

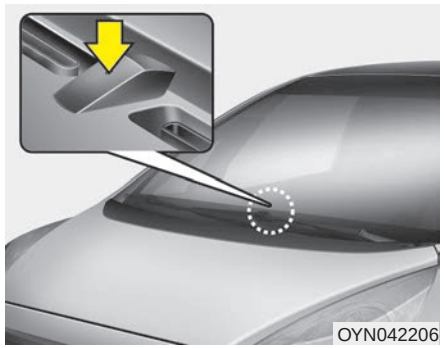
OYN042206

✻ NOTICE

Never place anything over the sensor located on the instrument panel to ensure better control of the heating and cooling system.

YN ENG 4(~99).QXP 4/16/2012 10:21 AM Page 83

Manual heating and air conditioning

The heating and cooling system can be controlled manually by pushing buttons other than the AUTO button. In this case, the system works sequentially according to the order of buttons selected.

When pressing any button (or turning any knob) except AUTO button while automatic operation, the functions not selected will be controlled automatically.

1. Start the engine.
2. Set the mode to the desired position.
3. Set the temperature control to the desired position.
4. Set the air intake control to the outside (fresh) air position.
5. Set the fan speed control to the desired speed.
6. If air conditioning is desired, turn the air conditioning system on.

Press the AUTO button in order to convert to full automatic control of the system.

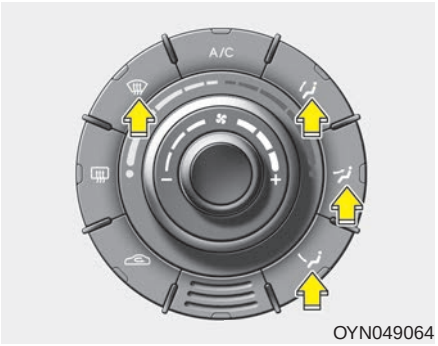

OYN049064

Mode selection

The mode selection button controls the direction of the air flow through the ventilation system.

Refer to the illustration in the “Manual climate control system”.

If you push the button once, the corresponding switch will turn on, and if you push the button again, the switch will turn off.

Face-Level (B, D)

Air flow is directed toward the upper body and face. Additionally, each outlet can be controlled to direct the air discharged from the outlet.

Floor-Level (C, E, A, D)

Most of the air flow is directed to the floor.

Defrost-Level (A, D)

Most of the air flow is directed to the windshield.

Also you may select 2~3 modes at the same time for desired air flow.

- face ( ) + floor ( ) mode
- face ( ) + defrost ( ) mode
- floor ( ) + defrost ( ) mode
- face ( ) + floor ( ) + defrost ( ) mode

YN ENG 4(~99).QXP 4/16/2012 10:21 AM Page 84

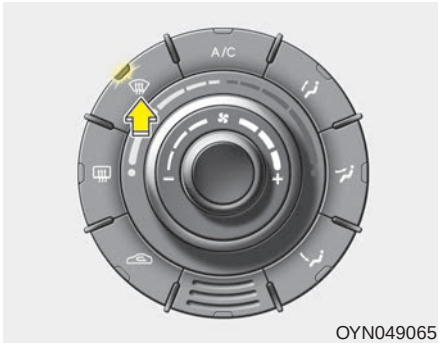

OYN049065

Maximum (MAX) defrost mode

When you select the MAX defrost mode, the following system settings will be made automatically;

- the air conditioning system will be turned on.
- the outside(fresh) air position will be selected.
- the fan speed will be set to the high speed.

To turn the MAX defrost mode off, press the mode button or MAX defrost button again or AUTO button.

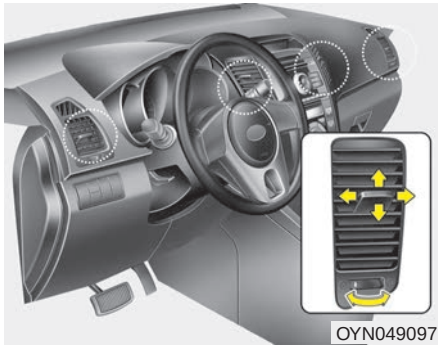
OYN049097

Instrument panel vents

The outlet port can be opened or closed separately using the horizontal thumb-wheel. To close the vent, rotate it left to the maximum position. To open the vent, rotate it right to the desired position.

Also, you can adjust the direction of air delivered from these vents using the vent control lever as shown.

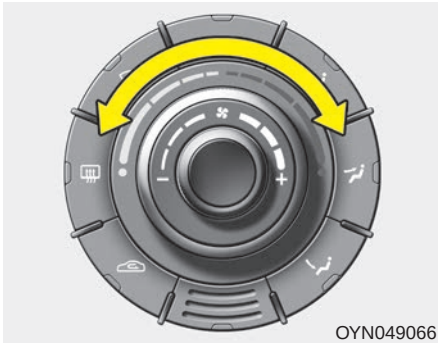
OYN049066

Temperature control

The temperature will increase to the maximum (HI) by turning the knob to the right extremely.

The temperature will decrease to the minimum (Lo) by turning the knob to the left extremely.

When turning the knob, the temperature will increase or decrease by 0.5°C/1°F. When set to the lowest temperature setting, the air conditioning will operate continuously.

YN ENG 4(~99).QXP 4/16/2012 10:21 AM Page 85

Temperature conversion

If the battery has been discharged or disconnected, the temperature mode display will reset to Centigrade.

This is normal condition. You can switch the temperature mode between Centigrade to Fahrenheit as follows;

While depressing the AUTO button, depress the OFF button for 3 seconds or more. The display will change from Centigrade to Fahrenheit, or from Fahrenheit to Centigrade.

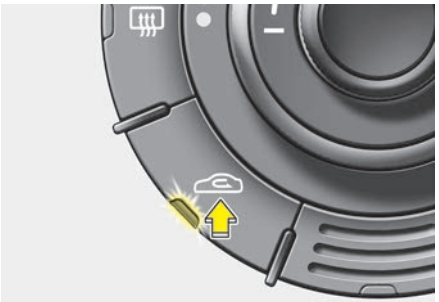

OYN049067

Air intake control

This is used to select outside (fresh) air position or recirculated air position.

To change the air intake control position, push the control button.

Recirculated air position



The indicator light on the button illuminates when the recirculated air position is selected.

With the recirculated air position selected, air from passenger compartment will be drawn through the heating system and heated or cooled according to the function selected.

Outside (fresh) air position



The indicator light on the button does not illuminate when the outside (fresh) air position is selected.

With the outside (fresh) air position selected, air enters the vehicle from outside and is heated or cooled according to the function selected.

YN ENG 4(~99).QXP 4/16/2012 10:21 AM Page 86

✻ NOTICE

It should be noted that prolonged operation of the heating in recirculated air position will cause fogging of the windshield and side windows and the air within the passenger compartment will become stale.

In addition, prolonged use of the air conditioning with the recirculated air position selected, will result in excessively dry air in the passenger compartment.

⚠ WARNING

- **Continued climate control system operation in the recirculated air position may allow humidity to increase inside vehicle which may fog the glass and obscure visibility.**
- **Do not sleep in a vehicle with air conditioning or heating system on. It may cause serious harm or death due to a drop in the oxygen level and/or body temperature.**
- **Continued climate control system operation in the recirculated air position can cause drowsiness or sleepiness, and loss of vehicle control. Set the air intake control to the outside (fresh) air position as much as possible while driving.**



OYN049068

Fan speed control

The fan speed can be set to the desired speed by turning the fan speed control knob.

To change the fan speed, turn the knob to the right for higher speed or left for lower speed.

Pressing the OFF button turns off the fan.

YN ENG 4(~99).QXP 4/16/2012 10:21 AM Page 87

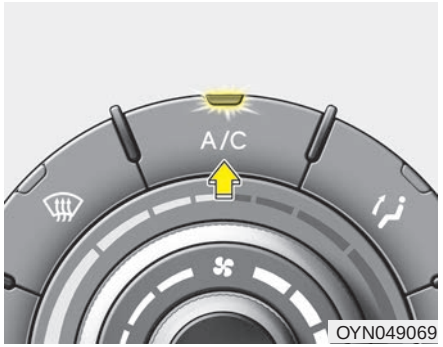

Air conditioning

Push the A/C button to turn the air conditioning system on (indicator light will illuminate).

Push the button again to turn the air conditioning system off.

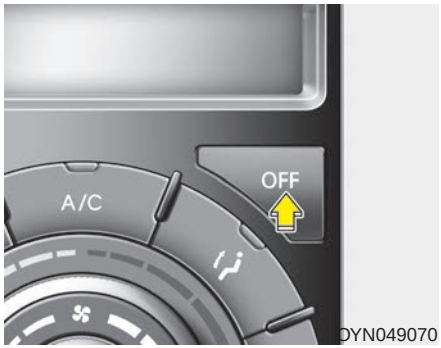

OFF mode

Push the OFF button to turn off the air climate control system. However you can still operate the mode and air intake buttons as long as the ignition switch is in the position ON.

Climate control air filter (if equipped)

The climate control air filter installed behind the glove box filters the dust or other pollutants that come into the vehicle from the outside through the heating and air conditioning system. If dust or other pollutants accumulate in the filter over a period of time, the air flow from the air vents may decrease, resulting in moisture accumulation on the inside of the windshield even when the outside (fresh) air position is selected. If this happens, we recommend that the climate control air filter be replaced by an authorized Kia dealer.

YN ENG 4(~99).QXP 4/16/2012 10:21 AM Page 88

✻ NOTICE

- **Replace the filter according to the Maintenance Schedule.**
  If the vehicle is being driven in severe conditions such as dusty, rough roads, more frequent climate control air filter inspections and changes are required.
- **When the air flow rate is suddenly decreases, we recommend that the system be checked by an authorized Kia dealer.**

Checking the amount of air conditioner refrigerant and compressor lubricant

When the amount of refrigerant is low, the performance of the air conditioning is reduced. Overfilling also has a negative influence on the air conditioning system.

Therefore, if abnormal operation is found, we recommend that the system be inspected by an authorized Kia dealer.

✻ NOTICE

It is important that the correct type and amount of oil and refrigerant is used. Otherwise, damage to the compressor and abnormal system operation may occur.

⚠ WARNING

We recommend that the system be serviced by an authorized Kia dealer. Improper service may cause serious injury to the person performing the service.

YN ENG 4(~99).QXP 4/16/2012 10:21 AM Page 89

WINDSHIELD DEFROSTING AND DEFOGGING

⚠ WARNING - Windshield heating

Do not use the or position during cooling operation in extremely humid weather. The difference between the temperature of the outside air and that of the windshield could cause the outer surface of the windshield to fog up, causing loss of visibility. In this case, set the mode selection knob or button to the position and fan speed control knob or button to the lower speed.

- For maximum defrosting, set the temperature control to the extreme right/hot position and the fan speed control to the highest speed.
- If warm air to the floor is desired while defrosting or defogging, set the mode to the floor-defrost position.
- Before driving, clear all snow and ice from the windshield, rear window, outside rear view mirrors, and all side windows.
- Clear all snow and ice from the hood and air inlet in the cowl grill to improve heater and defroster efficiency and to reduce the probability of fogging up inside of the windshield.

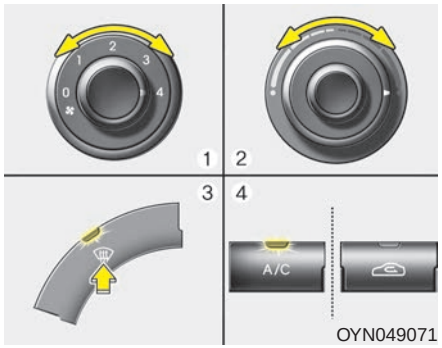

Manual climate control system

To defog inside windshield

1. Select any fan speed except “0” position.
2. Select desired temperature.
3. Select the or position.
4. The outside (fresh) air will be selected automatically. Additionally, the air conditioning will automatically operate if the mode is selected to the position.

If the air conditioning and outside (fresh) air position are not selected automatically, press the corresponding button manually.

YN ENG 4(~99).QXP 4/16/2012 10:22 AM Page 90

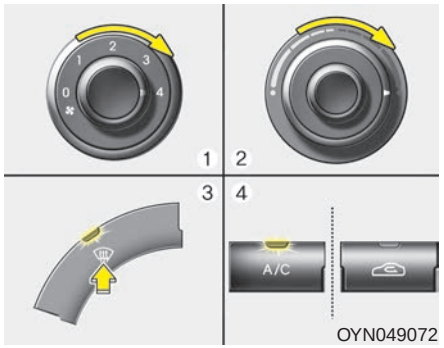

OYN049072

To defrost outside windshield

1. Set the fan speed to the highest (extreme right) position.
2. Set the temperature to the extreme hot position.
3. Select the position.
4. The outside (fresh) air and air conditioning will be selected automatically.

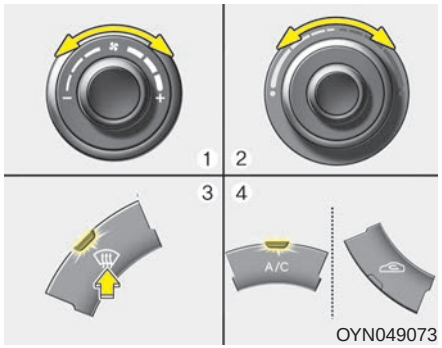

OYN049073

Automatic climate control system

To defog inside windshield

1. Select desired fan speed.
2. Select desired temperature.
3. Press the defrost button ( ).
4. The air-conditioning will be turned on according to the detected ambient temperature, outside (fresh) air position and higher fan speed will be selected automatically.

If the air-conditioning, outside (fresh) air position and higher fan speed are not selected automatically, adjust the corresponding button or knob manually.

If the position is selected, lower fan speed is controlled to higher fan speed.

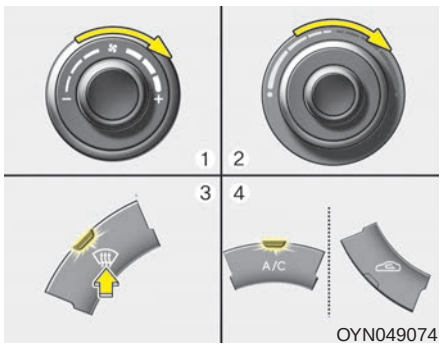

OYN049074

To defrost outside windshield

1. Set fan speed to the highest position.
2. Set temperature to the extreme hot (HI) position.
3. Press the defrost button ( ).
4. The air-conditioning will be turned on according to the detected ambient temperature and outside (fresh) air position will be selected automatically.

If the position is selected, lower fan speed is controlled to higher fan speed.

YN ENG 4(~99).QXP 4/16/2012 10:22 AM Page 91

STORAGE COMPARTMENT

These compartments can be used to store small items.

CAUTION

- ***To avoid possible theft, do not leave valuables in the storage compartment.***
- ***Always keep the storage compartment covers closed while driving. Do not attempt to place many items in the storage compartment that the storage compartment cover cannot close securely.***

WARNING - Flammable materials

Do not store cigarette lighters, propane cylinders, or other flammable/explosive materials in the vehicle. These items may catch fire and/or explode if the vehicle is exposed to hot temperatures for extended periods.

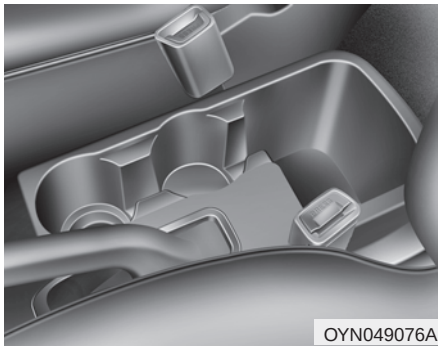

OYN049076A

Center console storage

These compartments can be used to store small items required by the driver or front passenger.

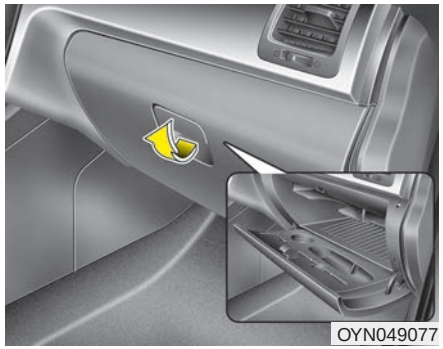

OYN049077

Glove box

To open the glove box, pull the handle and the glove box will automatically open. Close the glove box after use.

WARNING

To reduce the risk of injury in an accident or sudden stop, always keep the glove box door closed while driving.

CAUTION

Do not keep food in the glove box for a long time.

YN ENG 4(~99).QXP 4/16/2012 10:22 AM Page 92

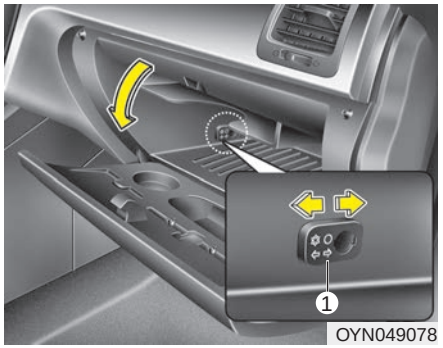

Glove box cooling (if equipped)

You can keep beverage cans or other items warm or cool using the open/close lever of the vent installed in the glove box.

1. Turn on the fan control switch of the climate control system.
2. Set the air flow control to the any mode.
3. Move the open/close lever (1) of the vent installed in the glove box to the open position.
4. Set the temperature control to warm or cool.

When the cool box is not used, turn the lever to its closed position.

✻ NOTICE

While using the cooling function, a small amount of condensed moisture could damage your pieces of paper.

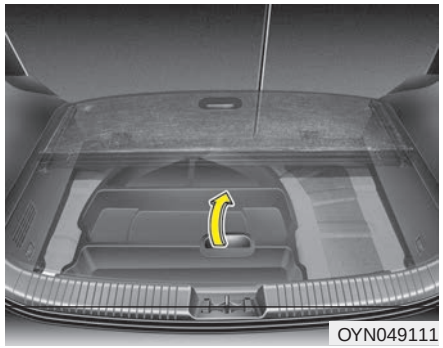

Luggage box (if equipped)

You can place a first aid kit, a reflector triangle, tools, etc. in the box for easy access.

To open the cover, grasp the handle on the top of the cover and lift it.

* The actual feature may differ from the illustration.

YN ENG 4(~99).QXP 4/16/2012 10:22 AM Page 93

INTERIOR FEATURES

■ Type A



OYN049106

■ Type B



OYN049132

LCD monitor (clock, outside temperature, etc.) (if equipped)

The monitor will display the outside temperature, date* and time.

If your vehicle enters into the icy road at outside temperature range of -5°C to 3°C (23°F to 37°F), the temperature digits will blink five times and the symbol (☼) will illuminate.

The date display when the radio power is turned off.

To change the date*, time, distance unit (km ↔ mi)* or temperature unit(°C ↔ °F), press the SET button for more than 1 second.

Then you will enter the set-up mode and mode changes in the following order as you press the SET button less than 1 second.

YEAR* → MONTH* → DAY* → HOUR → MINUTE → DISTANCE UNIT CHANGE* → TEMPERATURE UNIT CHANGE → Escape set-up mode

Press the SET button less than 1 second to select the mode and set the data using the UP(▲) and DOWN(▼) button while the selected setting mode blinks.

To cancel the SET UP mode, do one of the following :

- Press the SET button less than 1 second in set-up temperature unit change mode
- Press the SET button more than 1 second in any set-up mode
- After 15 seconds without any key press
- Ignition is ON or OFF in set-up mode
- Battery is disconnected

* if equipped



OYN049080

Cigarette lighter (if equipped)

For the cigarette lighter to work, the ignition switch must be in the ACC or ON position.

To use the cigarette lighter, push it all the way into its socket. When the element is heated, the lighter will pop out to the “ready” position.

YN ENG 4(~99).QXP 4/16/2012 10:22 AM Page 94

⚠ WARNING

- **Do not hold the lighter in after it is already heated because it will overheat.**
- **If the lighter does not pop out within 30 seconds, remove it to prevent overheating.**

⚠ CAUTION

We recommend that you use parts for replacement from an authorized Kia dealer. The use of plug-in accessories (shavers, hand-held vacuums, and coffee pots, etc.) may damage the socket or cause electrical failure.

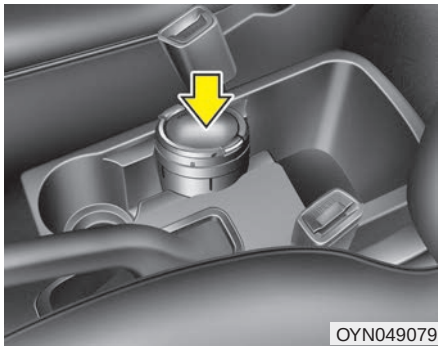
OYN049079

Ashtray (if equipped)

To use the ashtray, open the cover.
To clean or empty the ashtray, pull it out.

⚠ WARNING - Ashtray use

- **Do not use the vehicle's ashtrays as waste receptacles.**
- **Putting lit cigarettes or matches in an ashtray with other combustible materials may cause a fire.**

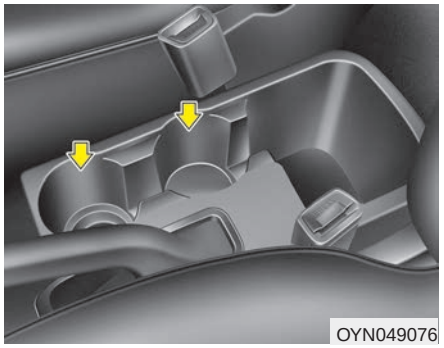
OYN049076

Cup holder

Cups or small beverage cans may be placed in the cup holders.

YN ENG 4(~99).QXP 4/16/2012 10:22 AM Page 95

⚠ WARNING - Hot liquids

- **Do not place uncovered cups with hot liquid in the cup holder while the vehicle is in motion. If the hot liquid spills, you burn yourself. Such a burn to the driver could lead to loss of control of the vehicle.**
- **To reduce the risk of personal injury in the event of sudden stop or collision, do not place uncovered or unsecured bottles, glasses, cans, etc., in the cup holder while the vehicle is in motion.**

⚠ WARNING

Keep cans or bottles out of direct sun light and do not put them in a vehicle that is heated up. It may explode.

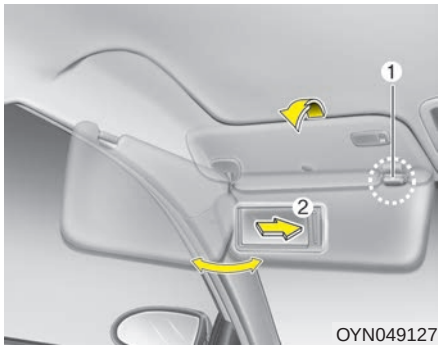

Sunvisor

Use the sunvisor to shield direct light through the front or side windows.

To use a sunvisor, pull it downward.

To use a sunvisor for a side window, pull it downward, unsnap it from the bracket (1) and swing it to the side.

To use the vanity mirror, pull down the visor and open the mirror cover (2).

Turn off the vanity mirror lamp (if equipped) after use.

✻ NOTICE

Close the vanity mirror cover securely and return the sunvisor to its original position after use.

⚠ CAUTION - Vanity mirror lamp (if equipped)

Always have the switch in the off position when the vanity mirror lamp is not in use. If the sunvisor is closed without the lamp off, it may discharge the battery or damage the sunvisor.

⚠ WARNING

For your safety, do not obstruct your vision when using the sunvisor.

■ Front (if equipped)

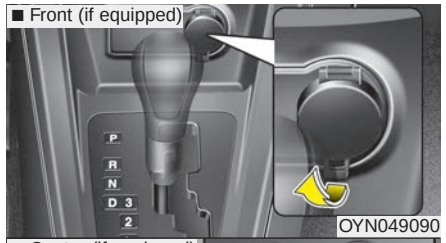

OYN049090

■ Center (if equipped)

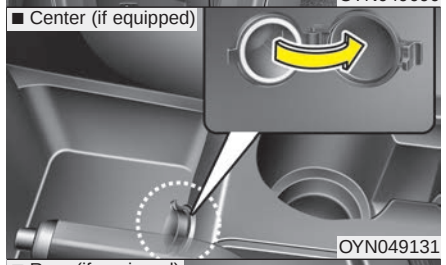

OYN049131

■ Rear (if equipped)

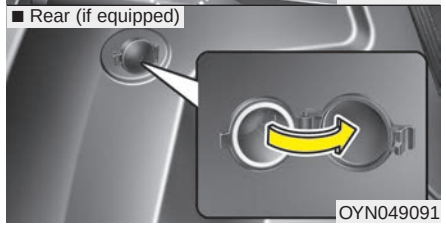

OYN049091

Power outlet (if equipped)

The power outlet is designed to provide power for mobile telephones or other devices designed to operate with vehicle electrical systems. The devices should draw less than 10 amps with the engine running.

⚠ CAUTION

- ***Use the power outlet only when the engine is running and remove the accessory plug after use. Using the accessory plug for prolonged periods of time with the engine off could cause the battery to discharge.***
- ***Only use 12V electric accessories which are less than 10A in electric capacity.***
- ***Adjust the air-conditioner or heater to the lowest operating level when using the power outlet.***
- ***Close the cover when not in use.***
- ***Some electronic devices can cause electronic interference when plugged into a vehicle's power outlet. These devices may cause excessive audio static and malfunctions in other electronic systems or devices used in your vehicle.***

⚠ WARNING

Do not put a finger or a foreign element (pin, etc.) into a power outlet and do not touch with a wet hand. You may get an electric shock.



OYN049094

Aux, USB and iPod port (if equipped)

If your vehicle has an aux and/or USB(universal serial bus) port or iPod port, you can use an aux port to connect audio devices and an USB port to plug in an USB and also an iPod port to plug in an iPod.

✻ NOTICE

When using a portable audio device connected to the power outlet, noise may occur during playback. If this happens, use the power source of the portable audio device.

✻ iPod is a trademark of Apple Inc.

YN ENG 4(~99).QXP 4/16/2012 10:23 AM Page 97



Clothes hanger (if equipped)

⚠ CAUTION

Do not hang heavy clothes, since those may damage the hook.

❉ The actual feature may differ from the illustration.

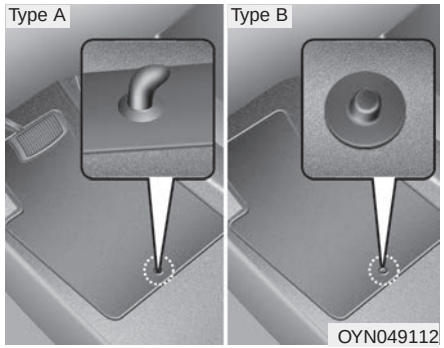

Floor mat anchor(s) (if equipped)

When using a floor mat on the front floor carpet, make sure it attaches to the floor mat anchor(s) in your vehicle. This keeps the floor mat from sliding forward.

⚠ WARNING

The following must be observed when installing ANY floor mat to the vehicle.

- **Ensure that the floor mats are securely attached to the vehicle's floor mat anchor(s) before driving the vehicle.**
- **Do not use ANY floor mat that cannot be firmly attached to the vehicle's floor mat anchors.**
- **Do not stack floor mats on top of one another (e.g. all-weather rubber mat on top of a carpeted floor mat). Only a single floor mat should be installed in each position.**

IMPORTANT - Your vehicle was manufactured with driver's side floor mat anchors that are designed to securely hold the floor mat in place. To avoid any interference with pedal operation, Kia recommends that the Kia floor mat designed for use in your vehicle be installed.

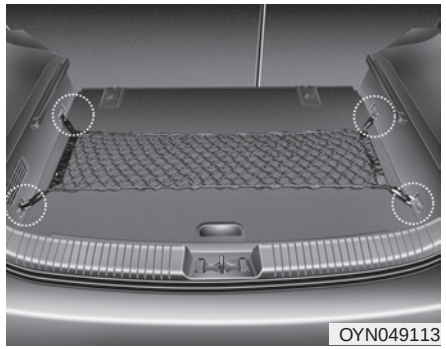
OYN049113

Luggage net holder (if equipped)

To keep items from shifting in the cargo area, you can use the 4 holders located in the cargo area (under the floor panel) to attach the luggage net.

If your vehicle is equipped with a luggage board, set the board to the lower position before installing the luggage net.

CAUTION

To prevent damage to the goods or the vehicle, care should be taken when carrying fragile or bulky objects in the luggage compartment.

WARNING

Avoid eye injury. DO NOT overstretch the luggage net, ALWAYS keep your face and body out of the luggage net's recoil path. DO NOT use when the strap has visible signs of wear or damage.

■ Upper mode

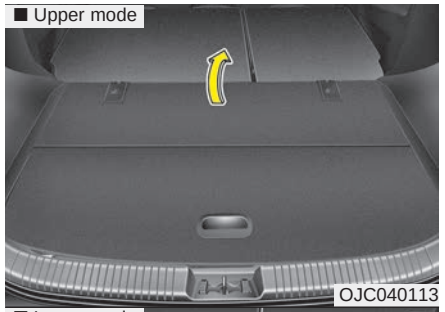
OJC040113

■ Lower mode

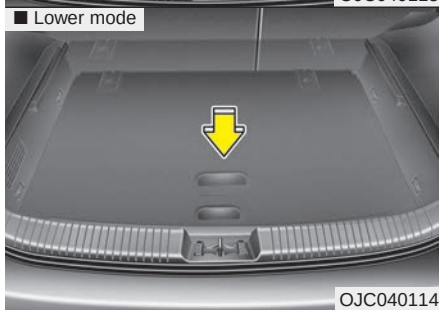
OJC040114

Luggage board

Two (Upper/Lower) modes are provided to enable you to use the cargo area as you like.

- Lower mode: Creates maximum cargo space.
- Upper mode: May be used with the rear seatbacks folded.

YN ENG 4(~99).QXP 4/16/2012 10:23 AM Page 99

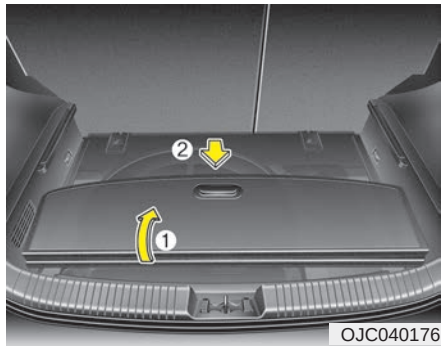

OJC040176

To use as upper mode:

1. Fold the board and slide it rearwards.


OJC040175

2. Lift the folded board to the upper support.
3. Slide the board forward and unfold.

CAUTION

Do not place luggage that weighs more than 60kg (132lbs.) in the upper mode and make sure the luggage does not move around the cargo area.

To use as lower mode:

Follow the procedure in reverse order shown in upper mode.

AUDIO SYSTEM

✻ NOTICE

If you install an after market HID head lamp, your vehicle's audio and electronic device may malfunction.

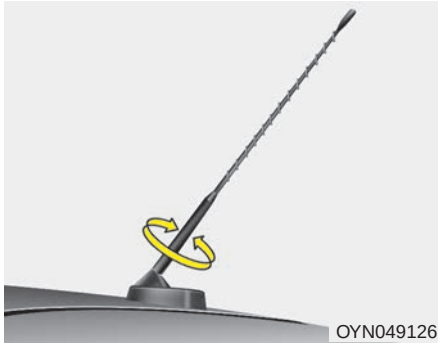

Antenna

Roof antenna

Your vehicle uses a roof antenna to receive both AM and FM signals. This antenna can be removed. To remove the antenna, turn it counter clockwise, To install the antenna, turn it clockwise.

⚠ CAUTION

- ***Before entering a place with a low height clearance or a car wash, remove the antenna by rotating it counter-clockwise. If not, the antenna may be damaged.***
- ***When reinstalling your antenna, it is important that it is fully tightened to ensure proper reception.***
- ***When cargo is loaded on the roof rack, do not place the cargo near the antenna pole to ensure proper reception.***

YN ENG 4(100~AUDIO).QXP 4/16/2012 10:13 AM Page 101

FM reception

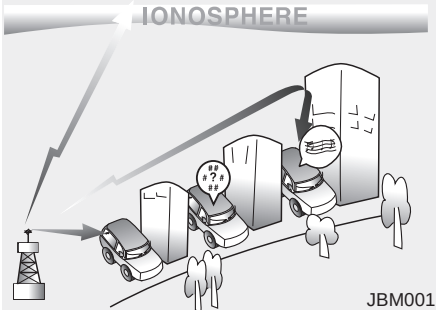

AM(MW) reception

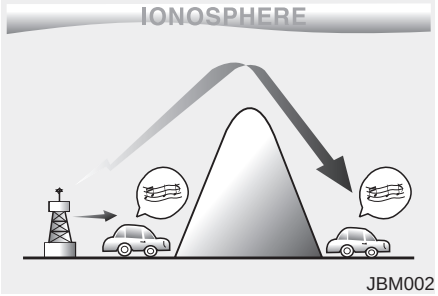

FM radio station

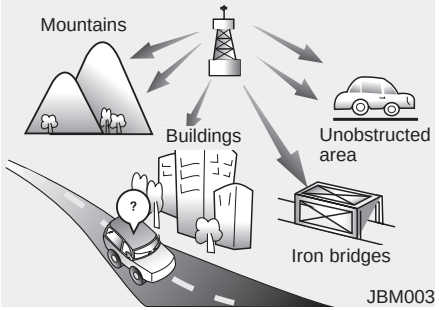

How car audio works

AM (MW) and FM radio signals are broadcast from transmitter towers located around your city. They are intercepted by the radio antenna on your car. This signal is then received by the radio and sent to your speakers.

When a strong radio signal has reached your vehicle the precise engineering of your audio system ensures the best possible audio reproduction. However in some cases the signal coming to your vehicle may not be strong an clear. This can be due to factors such as the distance from the radio station, closeness of other strong radio stations or the presence of buildings, bridges or other large obstructions in the area.

AM (MW) broadcasts can be received at greater distances then FM broadcasts. This is because AM (MW) radio waves are transmitted at low frequencies. These long low radio frequency waves can follow the curvature of the earth rather then travelling straight out into the atmosphere. In addition they curve around obstructions so that they can provide better signal coverage.

FM broadcasts are transmitted at high frequencies and do not bent to follow the earth's surface. Because of this FM broadcasts begin to fade at short distances from the station. Also FM signal are easily affected by buildings, mountains or other obstructions. These can result in certain listening conditions which might lead you to believe a problem exists with your radio. The following conditions are normal and do not indicate radio trouble.

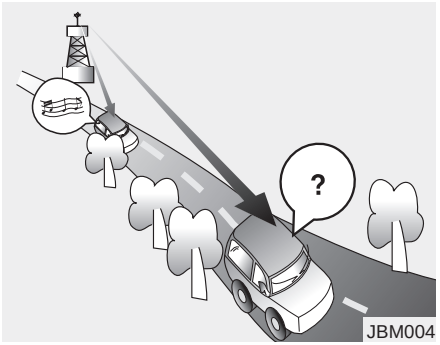

- Fading – As your car moves away from the radio station, the signal will weaken and sound will begin to fade. When this occurs, we suggest that you select another stronger station.
- Flutter/Static – Weak FM signal or large obstructions between the transmitter and your radio can disturb the signal causing static or fluttering noises to occur. Reducing the treble level may lessen this effect until the disturbance clears.

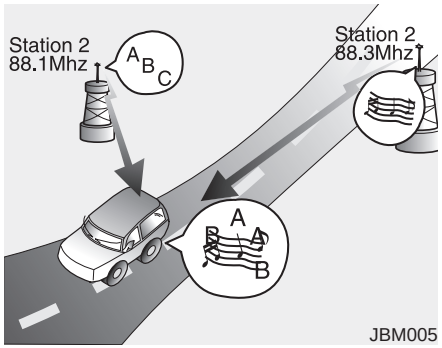

- Station Swapping – As a FM signal weakens, another more powerful station signal near the same frequency may begin to play. This is because your radio is designed to lock onto the clearest signal. If this occurs, select another station with a stronger signal.
- Multi-Path Cancellation - Radio signals being received from several directions can cause distortion or fluttering. This can be caused by a direct or reflected signal from the same station, or by signals from two stations with close frequencies. If this occurs, select another station until the condition has passed.

Using a cellular phone or a two-way radio

When a cellular phone is used inside the vehicle, noise may be produced from the audio equipment. This does not mean that something is wrong with the audio equipment. In such a case, use the cellular phone at a place as far as possible from the audio equipment.

⚠ CAUTION

When using a communication system such a cellular phone or a radio set inside the vehicle, a separate external antenna must be fitted. When a cellular phone or a radio set is used with an internal antenna alone, it may interfere with the vehicles electrical system and adversely affect safe operation of the vehicle.

⚠ WARNING

Don't use a cellular phone when you are driving. You must stop at a safe place to use a cellular phone.

YN ENG 4(100~AUDIO).QXP 4/16/2012 10:13 AM Page 103

General information

RDS (Radio Data System)

Many VHF stations transmit RDS information. The tuner evaluates the RDS telegram and offers the following advantages:

- ❑ PS (Program Service name): Display of station name.
- ❑ PTY (Program TYpe): Station selection by program type.
- ❑ AF (Alternative Frequency): Automatic re-tuning to best alternative frequency.
- ❑ TA (Traffic Announcement): Traffic announcements.
- ❑ EON (Enhanced Other Networks): Automatic fade-in of traffic announcements on other stations.

Notes on operating instructions

The following reading aids are used to simplify these operating instructions:

- ☞ Asks you to perform an action
- ✓ Shows the unit's reaction
- ✎ Provides extra info
- ❑ Identifies a list

Class 1 laser product



⚠ CAUTION

Any inappropriate use of the device may expose the user to invisible laser rays which exceed the limits for Class 1 laser products.

⚠ WARNING

Don't use a cellular phone when you are driving. You must stop at a safe place to use a cellular phone.

⚠ WARNING

When driving your vehicle, be sure to keep the volume of the unit set low enough to allow you to hear sounds coming from the outsides (e.g. aware of the road and traffic conditions).

⚠ CAUTION

- ***Do not place beverages close to the audio system. The audio system mechanism may be damaged if you spill them.***
- ***Do not strike or allow anything to impact the audio system, damage to the system mechanisms could occur.***

YN ENG 4(100~AUDIO).QXP 4/16/2012 10:13 AM Page 104

Safety instructions

⚠ WARNING
Make all inputs via the remote control only when the vehicle is stationary, or have the passenger make them. Otherwise, you may endanger the occupants and other road users.

⚠ WARNING
Avoid inserting any foreign objects into the slot of this player. Failure to observe this may cause malfunction due to the precise mechanism of this unit.

⚠ WARNING
Keep the volume level low enough to be aware of road and traffic conditions.

⚠ WARNING
Do not open covers and do not repair yourself. Refer servicing to qualified personnel.

Notes on USB stick (thumb drive)

⚠ WARNING
- **We strongly recommend only using USB sticks (thumb drives) of well-known manufacturers.**
- **On no account must other USB devices such as hard discs or other digital equipment or multi plug USB hub be connected to the USB hub. Connecting other devices can cause malfunction or even destroy the audio equipment.**
- **Avoid using the USB memory when it might hinder your safety driving.**
- **It is possible that noise is heard during playback when using the AUX-IN together with the power outlet due to system-related not a malfunction. If this happens, use the power source of the AUX device.**
- **In rare cases it is possible that an USB stick (thumb drive) is not recognized by the unit or may cause a malfunction. Please only use USB sticks that comply with the USB thumb drive specifications.**

Notes on Bluetooth® Wireless Technology devices

⚠ WARNING
In rare cases it is possible that an *Bluetooth®* Wireless Technology device is not recognized by the unit or may cause a malfunction. Please only use *Bluetooth®* Wireless Technology devices that comply with the *Bluetooth®* Wireless Technology specifications.

*Notes on Bluetooth® Wireless Technology**

- ❑ *Bluetooth®* Wireless Technology is a short-range wireless radio connectivity technology used mainly for mobile phones, hand-held PC's and other devices.
- ❑ *Bluetooth®* Wireless Technology SIG Inc. owns the *Bluetooth®* Wireless Technology word, marking and logo; and any use of such marks is under license. Other trademarks and trade names are those of their respective owners.
- ❑ *Bluetooth®* Wireless Technology operates in 2.4 GHz frequency range and transmits voice and data at speeds of up to 1 mbps within a range of up to 10 m.

YN ENG 4(100~AUDIO).QXP 4/16/2012 10:13 AM Page 105

- ❑ The Head Unit supports the Hands free Profile (HFP), the Advanced Audio Distribution Profile (A2DP) and the Audio Video Remote Control Profile (AVRCP).
- ❑ The Head Unit has been verified and certified by the *Bluetooth®* Wireless Technology Qualification Program (BQP) for compliance to the *Bluetooth®* Wireless Technology standards. For more information, please check the *Bluetooth®* Wireless Technology web site (http://www.bluetooth.com/Bluetooth/Connect/Products/) for the BQP product listing.

* Only if this option is available on your Head Unit.

Notes on iPod®

⚠ WARNING

The newly introduced iPod® with new firmware may not be 100% compatible and may not be supported by the system.

Care of disc (if equipped)

- ❑ If the temperature inside the car is too high, open the car window for ventilation before using your car audio.
- ❑ It is illegal to copy and use MP3/WMA files without permission. Use CDs that are created only by lawful means.
- ❑ Do not apply volatile agents such as benzene and thinner, normal cleaners and magnetic sprays made for analogue disc onto CDs.
- ❑ To prevent the disc surface from getting damaged. Hold and carry CDs by the edges or the edges of the center hole only.
- ❑ Clean the disc surface with a piece of clean soft cloth before playback (wipe it from the center to the outside edge).
- ❑ Do not damage the disc surface or attach pieces of sticky tape or paper on it.
- ❑ Make sure on undesirable matter other than CDs are inserted into the CD player.
- ❑ Do not insert more than one CD at a time. It is likely to block CD operation.
- ❑ Keep CDs in their cases after use to protect them from scratches or dirt.
- ❑ Depending on the type of CD-R/CD-RW CDs, certain CDs may not operate normally according to manufacturing companies or making and recording methods. In such circumstances, if you still continue to use those CDs, they may cause the malfunction of your car audio system.

Playing an incompatible Copy Protected Audio CD

Some copy protected CDs which do not comply with the international audio CD standards (Red Book), may not play on your car audio. Please note that if you try to play copy protected CDs and the CD player does not perform correctly the CDs may be defective, not the CD player.

YN ENG 4(100~AUDIO).QXP 4/16/2012 10:13 AM Page 106

Notes on CD formats

- ❑ The following CD formats are supported by the CD player:
- ❑ CD Audio (CD-DA in accordance with the Red Book Standard);
- ❑ CD-R/RW (in accordance with Orange Book, part 2/3)
- ❑ Multi-session CD (in accordance with multi-session CD specification 1.0).

Red Book

Red Book is the standard for audio CDs (Compact Disc Digital Audio system, or CDDA). It is named after one of a set of color-bound books that contain the technical specifications for all CD and CDROM formats.

Orange Book

Orange Book is the standard for CD-R duplicating (write-once) media. Compact Disc ReWritable (CD-RW) is a rewritable optical disc format. Known as CD-Erasable (CD-E) during its development, CD-RW was introduced in 1997, and was preceded by the never officially released CD-MO in 1988.

Multi Session Disc

A multi session disc is a compact disc to which data is added incrementally in more than one recording, allowing you to add, update, or “delete” files and directories. You could, theoretically, record audio tracks in multiple sessions. However, an audio CD player will only play the tracks in the first session. However, the disc cannot be played in a normal CD-ROM drive or home or car stereo until the session is closed.

Handling CDs

- ❑ Avoid leaving fingerprints on the CD when removing it.
- ❑ Always store any CDs in their protective covers.
- ❑ Always ensure that CDs are clean and dry before inserting.
- ❑ Protect CDs from heat and direct sunlight.

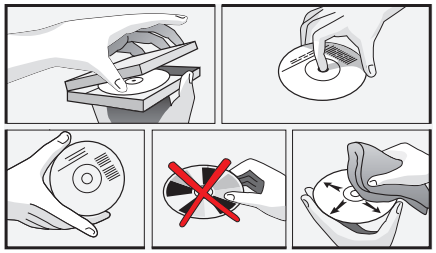

Cleaning the unit

Do not clean using cleaning fluid, alcohol or other solvents. Use only a damp cloth.

YN ENG 4(100~AUDIO).QXP 4/16/2012 10:13 AM Page 107

Control elements

Head unit with Bluetooth® Wireless Technology capability

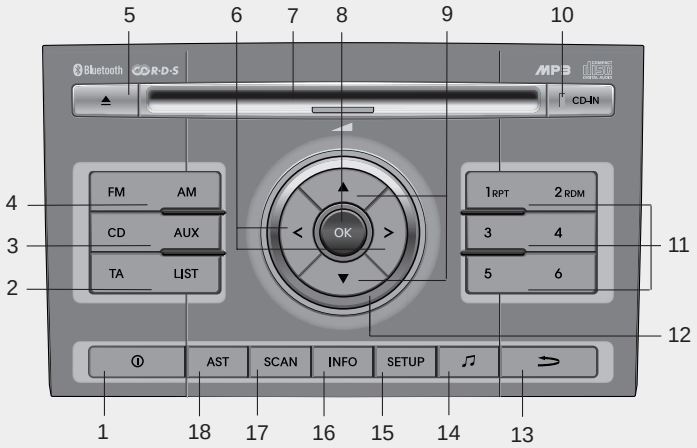

1.	⏻	Head Unit:	Switching the unit on and off
2.	TA	Tuner:	Activate/deactivate the Traffic Announcement function
	LIST	CD/USB/iPod:	Show tracks/files on device
3.	CD/AUX	CD/USB/iPod/ AUX:	Short press to toggle between the different audio sources USB (If available) – AUX (If available) – BT Audio (If available) or iPod® (If available) – BT Audio (If available)
4.	FM/AM	Tuner:	Select a FM- or AM-band
5.	▲	CD:	Eject CDs from the CD-slot
6.	< / >	Tuner:	Previous or next station
		CD/USB/iPod/ BT audio:	Previous or next track/file
		Menu:	Select a value for an item
7.	CD-slot		Opening for inserting the CD to be played
8.	OK		Confirm a selection
9.	▲ / ▼	Tuner:	Select radio station manually
		CD/USB/iPod:	Select playback folder.
		Menu:	Browse through the Setup/Sound Menu or the list function
10.	CD-in		Indication, that a CD is inserted into the CD player

YN ENG 4(100~AUDIO).QXP 4/16/2012 10:13 AM Page 108

Head unit without Bluetooth® Wireless Technology capability

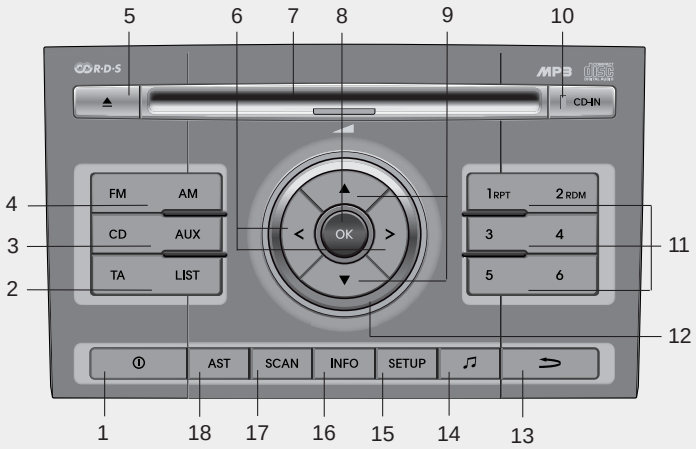

11. 1 - 6		Tuner: store preset stations, recall preset stations
RPT	CDDA/CDMP3/ USB/iPod:	Short press to repeat current track.
	CDMP3/USB:	Long press to repeat folder
RDM	CDDA:	Short press for random track
	CDMP3/USB/ iPod	Short press for “Random Folder” or “Random Album” Long press for “Random All”
12.	Head Unit:	Set the volume
13.		Return/Exit menu
14.	Head Unit:	Select sound settings.
15. SETUP	Head Unit:	Open the setup menu
16. INFO	CD/USB:	View File Name -> Song Title* -> Artist Name -> Album Name* -> Directory Name -> Total Files
	iPod:	View Song Title -> Artist Name -> Album Name
17. SCAN	Tuner:	Press to scan through the stations in the current frequency band
	CD/USB/iPod:	Short press to select “Scan All” or long press to select “Scan Folder”
18. AST	Tuner:	Autostore up to 6 stations in Autostore band

YN ENG 4(100~AUDIO).QXP 4/16/2012 10:13 AM Page 109

Inserting and removing CDs

Inserting a CD

☞ Insert the CD into the drive (printed side up).

✎ Insert only one disk

✎ For audio/MP3 CDs, playback starts automatically.

Removing a CD

☞ Press the ▲ button and carefully remove the CD.

Switching on/off

☞ Press the ⏻ button to switch the unit on or off.

Switching on and off with the ignition key

If the unit is switched on, it can be switched off and on automatically by removing or inserting and turning the ignition key.

Automatic switch off

If the unit was turned on using the ⏻ button with the ignition off, it automatically switches itself off after 60 minutes.

Volume

⚠ WARNING

When setting the volume, please make sure that traffic noises (horns, sirens, emergency vehicles, etc.) are still audible.

☞ Turn the knob to set the volume.

Menu operation

The central elements for operating the menus are the ▼, ▲, <, > or OK buttons.

YN ENG 4(100~AUDIO).QXP 4/16/2012 10:13 AM Page 110

Sound settings

☞ Short press the ♫ button to enter the Sound Menu.



☞ Short press the ▼ button to select the sound option you want to set.

✎ When pressing the ▲ button the selection order is reversed.

☞ To exit, press SETUP, CD, FM or AM buttons or short the ♫ button again.

Setting the Bass level

☞ Enter the Bass sub-menu by means of the ▼ or ▲ button.

☞ Short press the < or > button to set the Bass level to the required setting.

Setting the Middle level

☞ Enter the Middle sub-menu by means of the ▼ or ▲ button.

☞ Short press the < or > button to set the Middle level to the required setting.

Setting the Treble level

☞ Enter the Treble sub-menu by means of the ▼ or ▲ button.

☞ Short press the < or > button to set the Treble level to the required setting.

Setting the Fader level

With this function you can gradually increase or decrease in the sound volume level between the front and rear speakers.

☞ Enter the Fader sub-menu by means of the ▼ or ▲ button.

☞ Short press the < or > button to adjust the sound volume level between the rear and front speakers to the desired setting.

Adjusting the Balance

☞ Enter the Balance sub-menu by means of the ▼ or ▲ button.

☞ Short press the < or > button to adjust the sound volume level between the right hand and left hand speakers)

Adjusting the Volume

Adjusts the volume level between its minimum and maximum settings.

☞ Rotate the Volume knob clockwise to increase and counter-clockwise to decrease the volume level.

YN ENG 4(100~AUDIO).QXP 4/16/2012 10:13 AM Page 111

Listening to the Tuner

Selecting FM or AM

The tuner offers you two different wave bands.

☞ Either press the **FM** or the **AM** button.

✎ The unit switches to band selected.

Selecting a FM band

The tuner offers you to select three FM bands.

☞ Short press the **FM** button till the required FM band is selected.

❑ FM 1

❑ FM 2

❑ FMA (AST):

✓ In the FM 1 and FM 2 band you can manually store up to 6 FM stations each.

✓ In the FMA band up to 6 FM stations will be automatically stored.

Selecting an AM band

The tuner offers you to select the one AM waveband, the AM. You can select from two AM bands.

☞ Short press the **AM** button till the required AM band is selected.

❑ AM

❑ AMA (AST):

✓ In AM you can manually store up to 6 AM stations.

✓ In the AMA band up to 6 AM stations will be automatically stored.

Autostore

This function automatically stores received stations fulfilling the preset reception quality into the FMA or AMA band.

☞ Short press the AST button to store strongest stations in the AST memory.

✓ The maximum number of stations stored in each AST-band is 6.

✎ Execute “Autostore” to update the list of the stations (e.g. when leaving an area).

Automatic search

With this function you can search for the next or previous station that fulfils the preset reception quality.

☞ Press the < or > button to search for the previous/next station in the currently selected waveband.

✓ Search will always start for the station with the strongest signal at LOCAL search level. If no station is found at LOCAL level, search will be continued at the DISTANCE level.

☞ To exit, press < or > button respectively.

Manual tune

With this function you can increase or decrease the radio frequency manually.

☞ Press the ▼ (Tune Down) or ▲ (Tune up) button to decrease or increase the frequency.

Fast tune

With this function you can continuously increase or decrease the radio frequency.

☞ Either press and hold the < or > or the ▼ or ▲ button to increase or decrease the frequency.

✓ The operation shall continue as long as the button is pressed.

YN ENG 4(100~AUDIO).QXP 4/16/2012 10:13 AM Page 112

Frequency Scan

The tuner will tune to each available station from the current waveband for 5 seconds before scanning for the next higher frequency station.

☞ Short press the **SCAN** button to activate/ deactivate the scan function.

Storing preset stations

In the FM 1 and 2 waveband there are 12 station presets and in the AM waveband there are 6 station presets.

(Also see “Selecting FM or AM waveband”).

☞ Select the waveband, FM or AM.

☞ Tune to the desired station.

☞ Press and hold one of the preset (1 - 6) button till you hear a beep.

✓ The station selected is stored under the preset button.

Recalling preset stations

With this function you can recall a preset station.

☞ Short press the desired preset button (1 through 6) to recall the previously set station.

Radio Data System (RDS)

Many FM stations broadcast RDS information. The RDS provides you with information of the following:

Traffic announcement (TA)

This function enables you to hear traffic announcements (TA). You will also hear traffic announcements when in CD/USB/ iPOD/ AUX mode.

☞ Short press the TA button to enable/disable function.

☞ Press the SCAN button to scan for Traffic Programme (TP) stations.

OR

☞ Press the < or > to search for TP stations.

☞ Set the required volume for the traffic announcements in the SETUP menu.

✓ The TA symbol will be displayed when TA is enabled.

✎ In FM mode: If no TP stations are found, the unit will remain at the current station displaying “NO TA/TP” for 5 seconds.

✎ In CD/USB/IPOD/AUX: If no TP station is found, the unit will remain at the current station. TP seek will be carried out at the background periodically every 30 seconds until a TP station is found or TA will be disabled.

TP lost

✎ If the TP signal of tuned station is lost after 30 seconds, an automatic TP seek for the next TP station will be performed. If no TP station is found, the unit will remain at the current station and display “TP LOST” for 5 seconds.

✓ TP seek will be performed periodically every 30 seconds until a TP station is found.

Traffic announcements from other stations – EON

With the EON function (Enhanced Other Networks) you will hear traffic announcements even if the set station does not provide this service but is operating on a network with other stations.

✎ If you have activated Traffic info, stations with EON will be treated like traffic stations, i.e. the search will also stop at these stations.

✎ When a traffic announcement is made, the unit switches to a traffic information station linked to EON. After the announcement, the unit returns to the previous programme.

YN ENG 4(100~AUDIO).QXP 4/16/2012 10:13 AM Page 113

Alarm Messages

This function passes on the PTY-Alarm message received either from the tuned station itself or from another station in the EON network of this station.

PTY ALARM / EON network

The unit automatically receives emergency messages transmitted by the broadcaster.

- ✓ The display shows “ALARM”.
- ☞ To skip the current alarm message, short press the **TA** button.
- ✓ The previous source becomes audible again.

News ON/OFF

This function will be explained in the SETUP menu.

Alternative Frequency

This function will be explained in the SETUP menu.

PTY search (FM only)

This function will be explained in the SETUP menu.

PI (Programme Identification) seek

This function performs an automatic seek for the best-received frequency of a RDS station with a specific PI-code.

- ✓ The unit will display ‘PI SEARCH’.

YN ENG 4(100~AUDIO).QXP 4/16/2012 10:13 AM Page 114

Listening to CD

Notes on CD

- ❑ This CD player is suitable for 12 cm discs and 8 cm discs with an adaptor only and can read both audio and MP3 format CD.
- ❑ Please do not use irregular shaped CDs.
- ❑ CD-R's or CD-RW's can generally be played. Due to varying quality of surface conditions of CDs, as well as the performance and condition of the CD writer, certain CD-R/CD-RW CD may not operate normally on this unit.

Notes on WMA

WMA files up to WMA Version 9.0 are supported.

CD playback

Starting/Stopping a CD

If no CD is located in the unit:

☞ Insert a CD.

✓ The CD will be played from the first title.

If a CD is located in the unit:

☞ Press CD button to start playback.

✎ If no CD is loaded into the unit "NO DISC" will appear the display.

✓ Playback will stop when another source is selected.

Ejecting a CD

☞ Press the ▲ button.

☞ Remove the disc from the CD slot.

✓ The previous used source will be selected.

✓ If the CD is not removed from the slot, it will be re-tracked into the unit without being played.

Previous/Next Track

☞ Press the < or > button to select the previous or next title OR

Fast Forward/Reverse

☞ Press and hold the < or > button to for fast forward and reverse.

✎ During fast forward and fast reverse audio is audible at reduced volume

Random Track

☞ Press the **RDM** button to activate/deactivate "Random Track" feature.

Repeat Track

☞ Press the **RPT** button to activate/deactivate the "Repeat Track" feature.

Scan Track

☞ Press **SCAN** button to activate/deactivate the track (title) scan feature.

✓ The first 10 seconds of each track/title will be played.

YN ENG 4(100~AUDIO).QXP 4/16/2012 10:13 AM Page 115

Viewing Information of Audio Files

☞ Short press the **INFO** button.

✓ Disk Title, Disk Artist, Track Title and Track Artist can be displayed.

✎ If no information is available “NO INFO” will be displayed, otherwise the corresponding information will be displayed for 5 seconds.

☞ To abort this mode: press one of the following buttons - ▲ / ▼ , Fast > / < , RPT, RDM, LIST.

List Function Audio Files

✎ With this mode you can browse all supported tracks on the CD.

✓ The main menu of the LIST function consists of:

☞ Short press LIST to enter track browsing.

☞ Short press ▼ or ▲ button to browse through the list of the selected category.

☞ Short press OK to playback of the selected track.

☞ To abort this mode: press one of the following buttons ▲ / ▼ , Fast > / < , RPT, RDM, INFO, SOUND, SETUP and LIST.

Notes on WMA files

The following WMA files are supported:

- ❑ Bit rate: Up to 192 kbit/s
- ❑ Sampling frequency: Up to 44.1 kHz
- ❑ WMA file names must have the “.wma” extension.

Notes on MP3 files

The following MP3 files are supported by the CD player:

- ❑ Files conform with MPEG1/2 or 2.5-Layer 3.
- ❑ The format of the CD must be ISO 9660 Level 1 or Level 2 or Joliet with sector format in Mode 1 or Mode 2 Form 1. Other formats cannot be played reliably.
- ❑ The maximum number of folders is 99.
- ❑ The Maximum number of folders and number of files is 490. Additional files and folders will be ignored.
- ❑ Bit rate: Maximum of 320 kbit/s, constant or variable.
- ❑ Sampling frequency: Maximum of 48 kHz.
- ❑ Text display: ID3 tag V1 and ID3 tag V2. MP3 tracks can contain addition information such as artist, track and album names (ID3 tags with maximum not more than 12 characters). Characters other than upper case/lower case letters (“Aa to Zz”) and underscore (“_”) may not be displayed.
- ❑ Only files with .mp3 extension are recognized as MP3 files.
- ❑ The unit may not play the first track in the order that you wrote them to the disc.
- ❑ The unit plays only the first session if the disc contains both CD audio tracks and MP3 files.
- ❑ When playing a disc of 8 kbps or variable bit rate (VBR), the elapsed playing time in the display window may not be correct.
- ❑ Make sure that a MP3 CD-R/CD-RW is burned that is formatted as a data disc and NOT as an audio disc.
- ❑ MP3 files are not compatible with packet write data transfer.

YN ENG 4(100~AUDIO).QXP 4/16/2012 10:13 AM Page 116

Playing MP3/WMA files

Starting/Stopping playback

☞ Press CD button to start playback.

✓ Playback will stop when another source is selected.

Previous/Next Track

☞ Press the < or > buttons to select previous or next track.

Previous/Next Folder

☞ Press the ▲ or ▼ button to select the previous or next folder.

Fast Forward/Reverse

☞ Press and hold the < or > button to for fast reverse and fast forward.

✎ During fast forward and fast reverse audio is audible at reduced volume.

Random

☞ Short press the RDM button to select the Random Folder option.

✎ All files in the Random Folder will be played randomly.

☞ Long press the RDM button to select the Random All option.

✎ All files on the CD will be played randomly.

Repeat

☞ Short press the RPT button to select the Repeat file option.

✎ The current file will be repeated.

☞ Long press the RPT button to select the Repeat Folder option.

✎ All files in the current folder will be repeated.

Scan

☞ Short press the SCAN button to select the Scan All option.

✎ All files in the CD will be scanned.

☞ Long press the SCAN button to select the Scan Folder option.

✎ The first file in each folder will be scanned.

✓ CD plays the first 10 seconds of the song.

✓ When a folder ends: scanning continues with the first file of the next folder.

✓ When a CD ends: scanning continues with the first file of the first folder.

Viewing Information of Compressed Audio Files

☞ Short press the **INFO** button.

✓ File name, Song title*, Album name, Artist name, Directory name and Total track can be displayed.

✎ If no ID3 Tag is available “NO INFO” will be displayed, otherwise the corresponding information will be displayed for 5 seconds.

☞ To abort this mode: press one of the following buttons: ▲ or ▼, Fast > or <, RPT, RDM, INFO, SOUND, SETUP and LIST.

List Function Compressed Audio Files

✎ With this mode you can browse folders and files located on the CD.

✓ The main menu of the LIST function consists of:

☞ Short press LIST to enter track browsing.

☞ Short press ▼ or ▲ button to browse through the list of the selected category.

☞ Short press OK to playback of the selected track.

☞ To abort this mode: press one of the following buttons: ▲ or ▼, Fast > or <, RPT, RDM, INFO, SOUND, SETUP and LIST.

YN ENG 4(100~AUDIO).QXP 4/16/2012 10:13 AM Page 117

Using an iPod®

Connecting the iPod®

✎ Use the supplied Kia iPod® interface cable to connect the iPod® to the car's interface connector.

☞ Insert the Kia iPod® interface cable into the connectors of the iPod® and the car.

❑ When an iPod® is connected and the radio is on, the iPod® will be detected automatically. The iPod® will be selected as Source and the "iPod®" icon will be displayed.

❑ The playing time, title and artist (if available) of the current track will be displayed.

❑ If no supported file is detected on the iPod®, the iPod® source will not be activated.

Disconnecting the iPod®

☞ Remove the Kia iPod® interface cable from iPod® and car interface connector.

✎ The last used source will be activated.

Previous/Next files (File Up/Down)

☞ Short press > to Seek Up or < to Seek Down.

✎ The next/previous file will be played.

Manual Seek – Fast-forward/ Fastbackward

☞ Press and hold the < or > button (Seek Down / Up).

☞ Release the < or > button when the desired time has been found.

✎ During manual seek audio is audible at reduced volume.

Repeat File

☞ Short press the **RPT** button.

✎ The current file will be repeated once the current file has ended.

☞ To cancel the "Repeat File" mode, short press the **RPT** button again.

Random File/Album

☞ Short press the **RDM** button for Random Album playback.

✎ The albums of the current selection will be played in random order (songs in album remain in order).

☞ Long press the **RDM** button for Random File playback.

✎ All music files of the current selection will be played in random order.

✎ With "Random File" on, the next file is selected in the iPOD device in a non-sequential, random order.

☞ To cancel the "Random File/Album" mode, short press the RDM button again.

Viewing Information of iPod® Music files

☞ Short press the **INFO** button.

✎ Song title, artist name and album name can be displayed.

✎ File and directory name can not be displayed.

☞ To abort this mode: press one of the following buttons - Seek Up / Down, Fast Forward / Reverse, RPT, RDM, LIST.

YN ENG 4(100~AUDIO).QXP 4/16/2012 10:13 AM Page 118

List Function

✓ With this function you can navigate through all tracks in the iPOD file system.

✎ The main menu of the LIST function consists of:

✎ PLAYLIST, ARTIST, ALBUM, GENRE, SONG and COMPOSER.

☞ Short press the **OK** button to enter the selected category or the sub-category.

☞ Short press the ⮌ button to go to the previous category.

☞ Short press ▼ or ▲ button to navigate through the list of the selected category.

❑ The songs in the selected play-list will be displayed.

❑ **Artist**: a list of albums of the selected artist will displayed, the user can then select an album from this list to view the songs in the album selected.

❑ **Album**: the songs in the selected album will be displayed.

❑ **Genre**: the list of artists for the selected Genre will be displayed. After the selection of an artist, a list of albums for this artist is displayed. The user can now select an album in this list to view the songs in the selected album.

❑ **Song**: all songs in the album will be displayed in order.



Notes on USB

Due to constant changes of USB products in the market and their respective Software, it can be possible that some of the USB devices are not compatible with this Head Unit.

❑ The following file formats are supported:

❑ MP3 (MPEG 1 Layer 3)

❑ WMA (Windows Media Audio)

❑ The files must have the corresponding file extension ".mp3" or ".wma" to be played.

The total number of files and folders that can be searched is limited to a predefined value

❑ The Maximum number of files is 7999.

❑ The Maximum number of folders is 2000.

❑ The Maximum number of folders and number of files is 9999.

❑ Extra files and folders will be ignored.

YN ENG 4(100~AUDIO).QXP 4/16/2012 10:13 AM Page 119

Notes on USB Sticks (Thumb drives)

Only use USB sticks (thumb drives) of wellknown manufacturers. The use of other drives may result in malfunction of the set.

Do not connect other USB devices such as hard discs or other digital equipment to the USB hub. Connecting other devices can cause malfunction or even destroy the audio equipment.

⚠ CAUTION

- ***The USB hub is designed for a charge and supply current of up to 500 mA.***
- ***When using external equipment with a current consumption exceeding the specified 500 mA, the unit switches off the USB hub and gives a warning.***

Inserting and removing an USB stick (thumb drive)

☞ Insert the USB stick into the USB hub The USB hub is located in the console (also see Car Manual).

✎ Please keep lid closed when not in use.

Playback of files

✎ Playback starts automatically, in case there are MP3 or WMA files on the USB stick,

OR

☞ When the device is inserted but a different source was selected before, press the **AUX** button to start playback.

Previous/Next Folder

☞ Press the ▼ or ▲ buttons to select previous or next folder.

Previous/Next File

☞ Press the < or > buttons to select previous or next song file

✻ NOTICE

- **In rare cases it is possible that an USB stick (thumb drive) is not recognized by the unit or may cause a malfunction.**
- **This is not a system fault. Some USB sticks do not comply with the USB thumb drive specifications.**

⚠ CAUTION

- ***We strongly recommend only using USB sticks (thumb drives) of well-known manufacturers.***
- ***On no account must other USB devices such as hard discs or other digital equipment be connected to the USB hub.***
- ***Connecting other devices can cause malfunction or even destroy the audio equipment.***

YN ENG 4(100~AUDIO).QXP 4/16/2012 10:13 AM Page 120

Manual Seek – Fast Forward/Fast backward

☞ Press and hold the < or > button to go fast forward or fast backward.

✓ During manual seek audio is audible at reduced volume.

Repeat File/Folder

☞ Short press the **RPT** button to select Repeat File.

✓ The current file will be repeated.

☞ Long press the **RPT** button to select Repeat Folder.

✓ All files within the current folder will be repeated.

☞ To cancel the “Repeat File/Folder” mode, short press the **RPT** button again.

Random Folder/All Files

☞ Short press the **RDM** button to activate the “Random Folder” option.

☞ All files in the folder will be played at random.

OR

☞ Long press the **RDM** button to activate the “Random All” option.

✓ All files on the USB device will be played at random.

☞ To deactivate the “Random Folder/All Files” feature, press the **RDM** button again.

Scan File/Folder

☞ Long press the **SCAN** button to activate the “Scan Folder” option.

✎ The first track of each folder will be scanned, except the root directory.

OR

☞ Short press the **SCAN** button to activate the “Scan All” option.

✓ All files on the USB device will be scanned.

☞ To deactivate the “Scan Folder/All Files” feature, short press the **SCAN** button again to abort “Scan All”

Viewing MP3 Information

With this function text information of the MP3 files can displayed on the LCD-Display.

☞ Short press the press **INFO** button.

The following information will be shown in the following sequence.

❑ Filename (“NO INFO” will appear if the file name contains characters that do not pertain to the ASCII character set)

❑ ID3 tag info – Song Title (“NO INFO” will appear if there is no Song Title available)

❑ ID3 tag info – Artist name (“NO INFO” will appear if there is no Artist Name available)

❑ ID3 tag info – Album name (“NO INFO” will appear if will appear if there is no Album Name available).

❑ Directory name

❑ Total no. of files on the USB device

✓ The information will be visible on the LCD-display for 5 seconds.

YN ENG 4(100~AUDIO).QXP 4/16/2012 10:13 AM Page 121

Auxiliary In

- ❑ Via the Auxiliary Input (3.5 mm plug) you can connect your portable device to the Head Unit.

☞ Insert the 3.5 mm plug (connected to your portable device) into the Aux input.

✎ Audio output from the auxiliary source is directly audible when the device is plugged in.

✎ The Auxiliary Source is aborted when another source becomes active.

✓ To re-select the Auxiliary Source when it is plugged in already:

☞ Short press the **AUX** button on the Head Unit.

OR

☞ Short press the **Mode** button on the Steering Wheel Remote Control.

✎ If no Auxiliary Source is detected, “NO MEDIA” will be displayed for 5 seconds and the Head Unit will return to the previous selected source.

✻ NOTICE

The AUX source is not available if an iPod® is connected.

The volume setting of Auxiliary source is independent of other sources.

Any volume changes in Auxiliary source is memorized and used whenever the Auxiliary source is selected.

YN ENG 4(100~AUDIO).QXP 4/16/2012 10:13 AM Page 122

Bluetooth® Wireless Technology

You can use a *Bluetooth®* Wireless Technology device in your car to make a hands-free phone call or to stream music onto your in-car speakers (via this Head Unit). This Head Unit supports HFP, A2DP and AVRCP connection.

Advanced Audio Distribution Profile (A2DP)

This profile defines how high quality audio (stereo or mono) can be streamed from one device to another over a *Bluetooth®* Wireless Technology connection. For example: music streamed from a mobile phone to a wireless headset or car audio.

Audio/Video Remote Control Profile (AVRCP)

This profile is designed to provide a standard interface to control TVs, Hi-fi equipment, etc. to allow a single remote control (or other device) to control all of the A/V equipment to which a user has access. It may be used in concert with Advanced Audio Distribution Profile.

Hands-Free Profile (HFP)

This is commonly used to allow car handsfree kits to communicate with mobile phones in the car.

Notes for mobile phones

Some functions (e.g. starting of speech recognition) are not supported by all mobile phones. We cannot guarantee that all functions described will be supported by all mobile phones with *Bluetooth®* Wireless Technology.

New device

This function allows you to add a new phone to the Head Units *Bluetooth®* Wireless Technology Device List. Maximum of 5 devices can be added to the list. If the list is full, the oldest device will be replaced by the newly added *Bluetooth®* Wireless Technology device, based on last pairing date.

Pairing

To pair your *Bluetooth®* Wireless Technology-enabled device to this Head Unit, make sure that no device is currently streaming to this Head Unit first.

- ☞ Short press the **SETUP** button to enter the Setup menu.
- ☞ Short press the ▼ or ▲ button to access the *Bluetooth®* Wireless Technology sub-menu.
- ☞ Now select “New Device”.
- ☞ Press the ▲ or ▼ button to select the number of the first digit.
- ☞ Press the < or > button to select the next digit.
- ☞ Repeat the above steps for the other three digits.
- ☞ Press the **OK** button to confirm the 4-digit PIN for authentication and activate the “Discoverable Mode”.
- ✓ In “Discoverable Mode” the Head Unit broadcasts a *Bluetooth®* Wireless Technology ID.
- ☞ Look for the “Kia-BLUETOOTH” on your *Bluetooth®* Wireless Technology device.
- ☞ Enter identically the same PIN in your *Bluetooth®* Wireless Technology device and authenticate pairing on your *Bluetooth®* Wireless Technology device.

YN ENG 4(100~AUDIO).QXP 4/16/2012 10:13 AM Page 123

✓ When pairing is established, the ID of the *Bluetooth®* Wireless Technology device and the service list info will be stored in the Head Unit *Bluetooth®* Wireless Technology Device List.

Device List

With this function you can browse through and select *Bluetooth®* Wireless Technology devices that are stored in the Head Unit *Bluetooth®* Wireless Technology Device List.

☞ Short press the **SETUP** button to enter the Setup menu.

☞ Short press the ▼ or ▲ button to access the *Bluetooth®* Wireless Technology sub-menu.

☞ Press the > button to browse the Device List to select the required device.

☞ Press the **OK** button to start pairing between the selected device and the Head Unit.

✎ Note: Whenever there is at least one connected device active, in the display the *Bluetooth®* Wireless Technology icon is visible.

Delete Device

This function allows you to delete a *Bluetooth®* Wireless Technology device ID from the Head Unit *Bluetooth®* Wireless Technology Device List.

☞ Short press the **SETUP** button to enter the Setup menu.

☞ Short press the ▼ or ▲ button to access the *Bluetooth®* Wireless Technology sub-menu.

☞ Press the > button to select Delete Device.

☞ Press the **OK** button to delete the selected device from the Head Unit *Bluetooth®* Wireless Technology Device List

Phone Volume

☞ Short press the **SETUP** button to enter the Setup menu.

☞ Short press the ▼ or ▲ button to access the *Bluetooth®* Wireless Technology sub-menu.

☞ Select the option “Phone Volume”.

☞ Press the < or > button to decrease or increase the phone volume setting.

❑ Default setting: 12

❑ Setting range: 0 ... 35

❑ During an ongoing call, user is allowed to adjust the BT Phone volume. The adjusted volume is memorized into Phone Volume setting.

Answering a Call

☞ Press the **Call** button on the Steering Wheel Remote Control to accept an incoming call.

Terminate / Reject Call

☞ Press the **End Call** button on the Steering Wheel Remote Control to terminate or reject a call.

Last Call Re-dial

☞ Short press the **Call** button on the Steering Wheel Remote Control to re-dial last dialled number (one attempt).

☞ Long press the **Call** button on the Steering Wheel Remote Control to re-dial last dialled number (two attempts).

Private Call

This function allows you to have a private call even if the phone is connected to the Head Unit.

☞ Press the **Call** button on your phone to start a private call.

OR

☞ Press the **End Call** button on your phone to end a private call.

YN ENG 4(100~AUDIO).QXP 4/16/2012 10:13 AM Page 124

Transferring a Call

This function allows you to transfer a call during an ongoing call.

- ❑ From the tuner to the phone
- ❑ From the phone to the tuner

☞ Long press the **Call** button on the Steering Wheel Remote Control to transfer the ongoing call back to the phone or back to the tuner again.

Audio Streaming

Start Audio Streaming

This function allows the Head Unit to start streaming music from phone.

✓ The *Bluetooth®* Wireless Technology device must be connected with the Head Unit.

☞ Press the **AUX** button and select BT AUDIO.

✎ The Head Unit starts streaming the audio from the phone and will start playing the audio files.

✎ The Head Unit has no control on the sequence of track playback in phone.

Next/Previous Track

This function allows you to select the next/ previous track of phone's music player by using the next/previous track buttons on the Head Unit or Steering Wheel Remote Control.

☞ Short press the < or > button on the Head Unit or the Steering Wheel Remote Control.

Suspend Audio Streaming

This function allows you to suspend streaming music from the phone to the Head Unit.

☞ Short press the **Mute** button on the Steering Wheel Remote Control.

☞ Press the **AUX** button and de-select BT AUDIO.

YN ENG 4(100~AUDIO).QXP 4/16/2012 10:13 AM Page 125

Steering wheel remote control

Dual Steering Wheel Remote Control*





∧	Tuner	Short press: Preset up/Preset Down Long Press: Fast Seek Up/Fast Seek Down
∨	CD/iPod/USB	Short press: Next Track/Previous Track Long Press: Fast Forward/Fast Backward
	BT	Press to answer an incoming phone call
	BT	Press to reject an incoming phone call or terminate an ongoing phone call
		Press to mute the sound of the system
+		Short press to increase/decrease the volume by step
−		Long press to increase the volume continuously as long as the key is pressed
	Head Unit	If the Head Unit is off, short press to switch on the Head Unit.
		If the Head Unit is on, long press to switch off the Head Unit.
	Tuner	If the Head Unit is on, short press to select the next available source (wraparound): FM (last selected band) -> AM (last selected band) -> CDP -> AUX -> USB/IPOD -> BTA

YN ENG 4(100~AUDIO).QXP 4/16/2012 10:13 AM Page 126

Single Steering Wheel Remote Control*





∧	Tuner	Short press: Preset up/Preset Down Long Press: Fast Seek Up/Fast Seek Down
∨	CD/iPod/USB	Short press: Next Track/Previous Track Long Press: Fast Forward/Fast Backward
🔊+		Short press to increase/decrease the volume by 1 step
🔊−		Long press to increase the volume continuously as long as the key is pressed
	Head Unit	If the Head Unit is off, short press to switch on the Head Unit.
		If the Head Unit is on, long press to switch off the Head Unit.
	Tuner	If the Head Unit is on, short press to select the next available source (wraparound): FM (last selected band) -> AM (last selected band) -> CDP -> AUX -> USB/IPOD -> BTA
🔇		Press to mute the sound of the system

Note: To enable the following functions to be controlled by the steering wheel keys, ensure there is CD inserted and USB/iPod/AUX is connected.

* Only when the car is equipped with a Steering Wheel Remote Control

YN ENG 4(100~AUDIO).QXP 4/16/2012 10:13 AM Page 127

The Setup menu

In the setup menu you can change to your preferred settings.

- ☞ Short press the **SETUP** button to enter the Setup menu.
- ☞ Short press the ▼ or ▲ button to access the desired sub-menu.
- ☞ To exit, press SETUP, CD, FM or AM buttons.
- ❑ The following options are available:

On Volume → TA/News Volume → SDVC → PTY → News → Region → AF → Text Scrolling → Security Code → Bluetooth Menu

On Volume

In this sub-menu the On volume can be set to a certain level the unit will use when switched on.

- ☞ Enter the this sub menu as described above.
- ☞ Press the < or > buttons to select the desired value.
- ❑ Default setting: 12
- ❑ Setting range: 3 ... 25

TA/News Volume

With this setting you can set the volume used when traffic announcements are broadcasted.

- ☞ Enter the this sub menu as described above.
- ☞ Press the < or > buttons to select the desired value.
- ❑ Default setting: 12
- ❑ Setting range: 3 ... 25

Setting the speed-dependent volume (SDVC)

With this function the volume is automatically changed proportionally to the car speed.
The higher the car's speed is, the louder the volume.

- ☞ Enter the SDVC sub-menu as described above.
- ☞ Press the < or > buttons to select the pre-defined curve.
- ❑ Default setting: 1
- ❑ Setting curve range: 1 ... 5
- ❑ Curve range 0: SDVC feature is switched OFF

PTY search

Searching for stations by programme type.

Enter the this sub menu as described above.

- ☞ Press the < or > buttons to select the desired programme type.
- ☞ Press the OK button to confirm.
- ❑ PTY programme type 1 ... 29 can be selected
- ❑ Default setting: No PTY

News

- ☞ Enter the this sub menu as described above.
- ☞ Press the < or > buttons to select Off or On.
- ❑ News On – Allows the reception of News broadcast
- ❑ News Off – Does not allow the reception of News broadcast
- ❑ Default setting: NEWS OFF

YN ENG 4(100~AUDIO).QXP 4/16/2012 10:13 AM Page 128

Regionalization (REG)

This function controls the automatic station follow-me in order to keep tuned to the same regional station, or to switch between regional stations which might have different audio programs.

- ☞ Enter the REG sub-menu as described above.
- ☞ Press the < or > buttons to select REG Off, On or Auto.
- ❑ Regionalization Off – This setting will ignore the region setting.
- ❑ Regionalization On – This setting will not ignore the region setting.
- ❑ Regionalization Auto – The tuner will tune to the station with the best reception condition and with the same regional characteristic. If none of the stations satisfy the above condition, the regional characteristic will be ignored.
- ❑ Standard setting: REG OFF

Alternative Frequency (AF)

This function enables or disables the Alternate Frequency function. With AF enabled, the tuner will automatically tune to the alternative frequency from the AF-list of the tuned station, with the best reception signal.

- ☞ Enter the AF sub-menu as described above.
- ☞ Press the < or > buttons to select AF Off or AF On.
- ❑ AF on: Automatic re-tuning to alternative frequencies for the same station.
- ❑ AF off: No automatic re-tuning to alternative frequencies. The tuner will not leave the frequency set.

MP3 Text Scrolling

Activating/ deactivating text display with MP3 playback. The text appears in the middle line of the screen.

- ☞ Enter the “Text Scrolling” sub-menu as described above.
- ☞ Press the < or > buttons to select Text scrolling On or Off.
- ❑ The following settings are available:
- ❑ Fixed: This allows to display one page only (with a maximum of 12 characters)
- ❑ Scrolling: This allows to display two pages (with a maximum of 12 characters per page, 24 characters in total). Only one page is displayed at a time, the pages will alternate every 5 seconds.

YN ENG 4(100~AUDIO).QXP 4/16/2012 10:13 AM Page 129

Security Code

The unit is equipped with a security code option. This code can be used to protect the Head Unit against theft. In case the Head Unit is being disconnected from the car's power supply and the security code option being active you will be prompted to enter the four digit security code.

- ❑ Any code except 0000 enables the security code feature.
- ❑ Code 0000 disables the security code feature.

Behavior of security code function

- ❑ Security Code will be prompted if security code function is enabled and battery is disconnected.
- ❑ radio functions are deactivated during the Security Code Prompt
- ❑ User is given 2 attempts to enter the correct security code.
- ❑ Upon correct entry of the security code, all the radio functions will be activated.
- ❑ Upon 2 attempts of incorrect entry of the security code, radio will enter the LOCKED state.
- ❑ Once in LOCKED state, radio will only prompt for security code after 1 hour.

Enabling the Security Code option

- ☞ Short press the **SETUP** button to enter the SETUP menu.
- ☞ Short press the ▲ or ▼ button to access the Security Code mode.
- ✎ Now you have to enter the current security code.
- ☞ **1.** Short press the ▲ or ▼ button to set the value for each digit of the current security code.
- ☞ **2.** Short press the < or > button to select a specific digit.
- ☞ **3.** Short press the **OK** button to confirm the security code.
- ✓ Upon correct entry of the security code, you will be asked to enter the new security code that will replace the previous code memorized in the Head Unit.
- ☞ Repeat the steps **1.**, **2.** and **3.** to enter the new code.
- ☞ To abort the Security Code Menu in Setup mode, press either one of the following buttons: ⏻, ▲, FM, AM, CD, AUX, MUTE, TA, 1 through 6, AST, SCAN, INFO, SETUP, SOUND or ⮌.

⚠ WARNING

If security code function is activated and battery was disconnected, audio set will ask for the Security code. Be careful and remember the password that you have changed.

YN ENG 4(100~AUDIO).QXP 4/16/2012 10:13 AM Page 130

Troubleshooting

In rare instances, your Head Unit may not be functioning the way you expect it to do. Before calling the service department, please read the operating instructions thoroughly and go through the following check list; it may be possible to quickly solve the problem malfunction.

General

Status	Explanation / How to check
The operating panel generates some heat.	No error. The unit feels warm.
The volume decreases automatically. The volume can no longer be increased.	An integrated safety circuit prevents the temperature in the unit from exceeding a certain value. Allow the unit to cool down (set low volume).
	The volume and equalizer is self-adjusted based on radio signal intensity and its quality level with influence of region and location.

Tuner

Status	Explanation / How to check
“PI search” on the display	When recall is preset, the PI information is not available (due to very weak signal) or has been changed (due to different region). Meanwhile, check the REG settings in Setup menu.
Stored radio stations disappeared	By switching the FM button, 3 different memory banks (FM1, FM2, FMA) are able to store 6 different stations each.
	By switching the AM button, 2 different memory banks (MW, MWA) are able to store 6 different stations each.
Increasing / decreasing volume	Check SDVC setting (1-5 / off) in Setup menu.
Bad or no reception of the broadcast signal	Check if the antenna is correctly connected.
	Check whether the supply voltage‘s negative pole (brown cable) is correctly connected to earth (vehicle chassis).
The frequency instead of the station name is displayed	The unit is tuned to a station that does not transmit RDS signals or the transmitter is too weak.
The required station cannot be tuned to using automatic search	The desired station is too weak. Set desired station manually (manual tuning)
	Check whether the antenna is completely and correctly connected.
No traffic announcements are switched through (during iPod® playback)	Activate the traffic announcement by pressing TA button.

YN ENG 4(100~AUDIO).QXP 4/16/2012 10:13 AM Page 131

CD player

Status	Explanation / How to check
CD is rejected by the unit	The CD may be dirty. Clean the CD with a damp cloth. The CD does not comply with the CD player's specifications. See "Notes on audio and MP3 CDs"
Distorted sound/ skips during CD play	Player cannot read CD. CD is damaged or spoiled.
CD player does not work.	In cold weather conditions, condensation may occur on the laser. With the set on, wait for 5 minutes until the condensation evaporates.
No sound during CD playback	Some CDs contain multimedia data which is not recognized by the unit. Advance the tracks until music is heard. See "Notes on audio and MP3 CDs"
Problems with new copy-protected audio CDs	Some copy protection procedures are incompatible with accepted standards for audio CDs. This is not a fault of the unit.

Bluetooth® Wireless Technology

Status	Explanation / How to check
Bluetooth® Wireless Technology device is not able to connect to the Head unit	Check if *Bluetooth®* Wireless Technology device is stored in the Head unit. Check if "Kia BLUETOOTH" is stored in the *Bluetooth®* Wireless Technology device Redo Pairing

USB / iPod® / AUX

Status	Explanation / How to check
USB device is connected and selected but no sound is audible	The connected USB-device is not supported by the Head Unit. The USB device may be defective.
Distorted sound during play iPod® is connected and selected but no sound is audible	Your iPod® may be defective Check the functioning of your iPod® without being connected the interface connector. The Kia iPod® interface cable may be defective Have the Kia iPod® interface cable checked at the Kia repair shop See "Notes on USB and/or iPod®"

Security Code

Status	Explanation / How to check
Radio is in LOCKED or Security Code Prompt state	If the Radio is in LOCKED state, wait for 1 hour for it to enter the Security Code Prompt state Once the Radio enters Security Code Prompt state, enter the correct security code. If you have forgotten the security code, please contact your dealer.

YN ENG 4(100~AUDIO).QXP 4/16/2012 10:13 AM Page 132

Abbreviations

A2DP	Advanced Audio Distribution Profile
AF	Alternate Frequency
AST	Auto-Store
AVRCP	Audio/Video Remote Control Profile
BT	Bluetooth
BTA	Bluetooth Audio
CA	Compressed Audio
CDP	CD Player
EON	Enhanced Other Networks information
FF	Fast Forward
FR	Fast Reverse or Fast Backward
HFP	Hands-Free Profile
PS	Program Service Name
PTY	Program Type
RDS	Radio Data System
RND	Random
RPT	Repeat
TP	Traffic Program Identification
TA	Traffic Announcement

YN ENG 5.QXP 4/16/2012 10:01 AM Page 1

Driving your vehicle

5

Before driving / 5-3
Key positions / 5-4
Engine start/stop button / 5-8
ISG(idle stop and go) system / 5-14
Manual transaxle / 5-16
Automatic transaxle / 5-19
Brake system / 5-24
Cruise control system / 5-35
Speed limit control system / 5-39
Economical operation / 5-41
Special driving conditions / 5-43
Winter driving / 5-48
Trailer towing / 5-52
Vehicle weight / 5-60

YN ENG 5.QXP 4/16/2012 10:01 AM Page 2

⚠ WARNING - ENGINE EXHAUST CAN BE DANGEROUS!

Engine exhaust fumes can be extremely dangerous. If, at any time, you smell exhaust fumes inside the vehicle, open the windows immediately.

- **Do not inhale exhaust fumes.**
  Exhaust fumes contain carbon monoxide, a colorless, odorless gas that can cause unconsciousness and death by asphyxiation.
- **Be sure the exhaust system does not leak.**
  The exhaust system should be checked whenever the vehicle is raised to change the oil or for any other purpose. If you hear a change in the sound of the exhaust or if you drive over something that strikes the underneath side of the car, we recommend that the system be checked by an authorized Kia dealer.
- **Do not run the engine in an enclosed area.**
  Letting the engine idle in your garage, even with the garage door open, is a hazardous practice. Never run the engine in your garage any longer than it takes to start the engine and back the vehicle out.
- **Avoid idling the engine for prolonged periods with people inside the vehicle.**
  If it is necessary to idle the engine for a prolonged period with people inside the vehicle, be sure to do so only in an open area with the air intake set at "Fresh" and fan operating at one of the higher speeds so fresh air is drawn into the interior.

If you must drive with the tailgate open because you are carrying objects that make this necessary:

1. Close all windows.
2. Open side vents.
3. Set the air intake control at "Fresh", the air flow control at "Floor" or "Face" and the fan at one of the higher speeds.

To assure proper operation of the ventilation system, be sure the ventilation air intakes located just in front of the windshield are kept clear of snow, ice, leaves or other obstructions.

YN ENG 5.QXP 4/16/2012 10:01 AM Page 3

BEFORE DRIVING

Before entering vehicle

- Be sure that all windows, outside mirror(s), and outside lights are clean.
- Check the condition of the tires.
- Check under the vehicle for any sign of leaks.
- Be sure there are no obstacles behind you if you intend to back up.

Necessary inspections

Fluid levels, such as engine oil, engine coolant, brake fluid, and washer fluid should be checked on a regular basis, with the exact interval depending on the fluid. Further details are provided in section 7, “Maintenance”.

⚠ WARNING

Driving while distracted can result in a loss of vehicle control, that may lead to an accident, severe personal injury, and death. The driver's primary responsibility is in the safe and legal operation of a vehicle, and use of any handheld devices, other equipment, or vehicle systems which take the driver's eyes, attention and focus away from the safe operation of a vehicle or which are not permissible by law should never be used during operation of the vehicle.

Before starting

- Close and lock all doors.
- Position the seat so that all controls are easily reached.
- Adjust the inside and outside rearview mirrors.
- Be sure that all lights work.
- Check all gauges.
- Check the operation of warning lights when the ignition switch is turned to the ON position.
- Release the parking brake and make sure the brake warning light goes out.

For safe operation, be sure you are familiar with your vehicle and its equipment.

⚠ WARNING

All passengers must be properly belted whenever the vehicle is moving. Refer to “Seat belts” in section 3 for more information on their proper use.

⚠ WARNING

Always check the surrounding areas near your vehicle for people, especially children, before putting a car into D (Drive) or R (Reverse).

⚠ WARNING - Driving under the influence of alcohol or drugs

Drinking and driving is dangerous. Drunk driving is the number one contributor to the highway death toll each year. Even a small amount of alcohol will affect your reflexes, perceptions and judgment. Driving while under the influence of drugs is as dangerous or more dangerous than driving drunk.

You are much more likely to have a serious accident if you drink or take drugs and drive.

If you are drinking or taking drugs, don’t drive. Do not ride with a driver who has been drinking or taking drugs. Choose a designated driver or call a cab.

YN ENG 5.QXP 4/16/2012 10:01 AM Page 4

KEY POSITIONS

⚠ WARNING

- **When you intend to park or stop the vehicle with the engine on, be careful not to depress the accelerator pedal for a long period of time. It may overheat the engine or exhaust system and cause fire.**
- **When you make a sudden stop or turn the steering wheel rapidly, loose objects may drop on the floor and it could interfere with the operation of the foot pedals, possibly causing an accident. Keep all things in the vehicle safely stored.**
- **If you do not focus on driving, it may cause an accident. Be careful when operating what may disturb driving such as audio or heater. It is the responsibility of the driver to always drive safely.**



OED046001

Illuminated ignition switch (if equipped)

Whenever a front door is opened, the ignition switch will be illuminated for your convenience, provided the ignition switch is not in the ON position. The light will go off immediately when the ignition switch is turned on or go off after about 30 seconds when the door is closed.

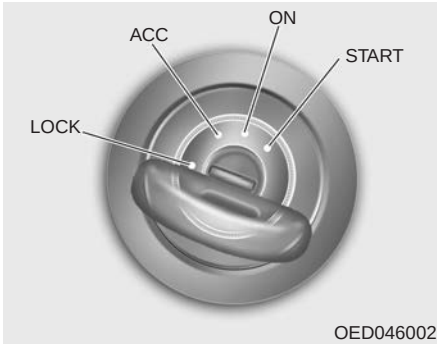

OED046002

Ignition switch position

LOCK

The steering wheel locks to protect against theft. The ignition key can be removed only in the LOCK position. When turning the ignition switch to the LOCK position, push the key inward at the ACC position and turn the key toward the LOCK position.

YN ENG 5.QXP 4/16/2012 10:01 AM Page 5

ACC (Accessory)

The steering wheel is unlocked and electrical accessories are operative.

✻ NOTICE

If difficulty is experienced turning the ignition switch to the ACC position, turn the key while turning the steering wheel right and left to release the tension.

ON

The warning lights can be checked before the engine is started. This is the normal running position after the engine is started.

Do not leave the ignition switch ON if the engine is not running to prevent battery discharge.

START

Turn the ignition switch to the START position to start the engine. The engine will crank until you release the key; then it returns to the ON position. The brake warning light can be checked in this position.

⚠ WARNING - Ignition switch

- **Never turn the ignition switch to LOCK or ACC while the vehicle is moving. This would result in loss of directional control and braking function, which could cause an accident.**
- **The anti-theft steering column lock is not a substitute for the parking brake. Before leaving the driver's seat, always make sure the shift lever is engaged in 1st gear for the manual transaxle or P (Park) for the automatic transaxle, set the parking brake fully and shut the engine off. Unexpected and sudden vehicle movement may occur if these precautions are not taken.**
- **Never reach for the ignition switch, or any other controls through the steering wheel while the vehicle is in motion. The presence of your hand or arm in this area could cause a loss of vehicle control, an accident and serious bodily injury or death.**
- **Do not place any movable objects around the driver's seat as they may move while driving, interfere with the driver and lead to an accident.**

Starting the engine

⚠ WARNING

Always wear appropriate shoes when operating your vehicle. Unsuitable shoes (high heels, ski boots,etc.) may interfere with your ability to use the brake and accelerator pedal, and the clutch (if equipped).

✻ NOTICE - Kick down mechanism (if equipped)

If your vehicle is equipped with a kick down mechanism in the accelerator pedal, it prevents you from driving at full throttle unintentionally by making the driver require increased effort to depress the accelerator pedal. However, if you depress the pedal more than approximately 80%, the vehicle can be at full throttle and the accelerator pedal will be easier to depress. This is not a malfunction but a normal condition.

YN ENG 5.QXP 4/16/2012 10:01 AM Page 6

Starting the gasoline engine

1. Make sure the parking brake is applied.
2. **Manual Transaxle** - Depress the clutch pedal fully and leave the shift lever at Neutral. Keep the clutch pedal and brake pedal depressed while turning the ignition switch to the start position.

   Automatic Transaxle - Place the transaxle shift lever in P (Park). Depress the brake pedal fully.

   You can also start the engine when the shift lever is in the N (Neutral) position.
3. Turn the ignition switch to START and hold it there until the engine starts (a maximum of 10 seconds), then release the key.
4. In extremely cold weather (below -18°C / 0°F) or after the vehicle has not been operated for several days, let the engine warm up without depressing the accelerator.

Whether the engine is cold or warm, it should be started ***without depressing the accelerator.***

⚠ CAUTION

If the engine stalls while you are in motion, do not attempt to move the shift lever to the P (Park) position. If traffic and road conditions permit, you may put the shift lever in the N (Neutral) position while the vehicle is still moving and turn the ignition switch to the START position in an attempt to restart the engine.

⚠ CAUTION

Do not engage the starter for more than 10 seconds. If the engine stalls or fails to start, wait 5 to 10 seconds before re-engaging the starter. Improper use of the starter may damage it.

Starting the diesel engine

To start the diesel engine when the engine is cold, it has to be pre-heated before starting the engine and then have to be warmed up before starting to drive.

1. Make sure the parking brake is applied.
2. **Manual Transaxle** - Depress the clutch pedal fully and leave the shift lever at Neutral. Keep the clutch pedal and brake pedal depressed while turning the ignition switch to the start position.

   Automatic Transaxle - Place the transaxle shift lever in P(park). Depress the brake pedal fully.

   You can also start the engine when the shift lever is in the N(neutral) position.

YN ENG 5.QXP 4/16/2012 10:01 AM Page 7

Glow indicator light

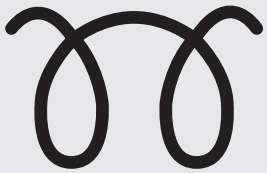

W-60

3. Turn the ignition switch to the ON position to pre-heat the engine. Then the glow indicator light will illuminate.
4. If the glow indicator light goes out, turn the ignition switch to the START position and hold it there until the engine starts (a maximum of 10 seconds), then release the key.

✻ NOTICE

If the engine were not started within 10 seconds after the preheating is completed, turn the ignition switch once more to the LOCK position during 10 seconds, and then to the ON position, in order to preheat again.

Starting and stopping the engine for turbocharger intercooler

1. Do not race or accelerate the engine immediately after starting.
   If the engine is cold, idle for several seconds before sufficient lubrication is ensured in the turbocharger unit.
2. After high speed or extended driving, requiring a heavy engine load, run the engine on idle condition about 1 minute before turning it off.
   This idle time will allow the turbocharger to cool prior to shutting the engine off.

⚠ CAUTION

Do not turn the engine off immediately after it has been subjected to a heavy load. Doing so may cause severe damage to the engine or turbocharger unit.

YN ENG 5.QXP 4/16/2012 10:02 AM Page 8

ENGINE START/STOP BUTTON (IF EQUIPPED)



OYN059001

Illuminated ENGINE START/STOP button

Whenever the front door is opened, the ENGINE START/STOP button will illuminate for your convenience. The light will go off after about 30 seconds when the door is closed. It will also go off immediately when the theft-alarm system is armed.

ENGINE START/STOP button position

OFF



Not illuminated

• With manual transaxle

To turn off the engine (START/RUN position) or vehicle power (ON position), stop the vehicle then press the ENGINE START/STOP button.

• With automatic transaxle

To turn off the engine (START/RUN position) or vehicle power (ON position), press the ENGINE START/STOP button with the shift lever in the P (Park) position. When you press the ENGINE START/STOP button without the shift lever in the P (Park) position, the ENGINE START/STOP button will not change to the OFF position but to the ACC position.

Also, the steering wheel locks when the ENGINE START/STOP button is in the OFF position to protect you against theft. It locks when the door is opened.

If the steering wheel is not locked properly when you open the driver's door, the warning chime will sound. Try locking the steering wheel again. If the problem is not solved, we recommend that the system be checked by an authorized Kia dealer.

In addition, if the ENGINE START/STOP button is in the OFF position after the driver's door is opened, the steering wheel will not lock and the warning chime will sound. In such a situation, close the door. Then the steering wheel will lock and the warning chime will stop.

✻ NOTICE

If the steering wheel doesn't unlock properly, the ENGINE START/STOP button will not work. Press the ENGINE START/STOP button while turning the steering wheel right and left to release the tension.

YN ENG 5.QXP 4/16/2012 10:02 AM Page 9

⚠ CAUTION

You are able to turn off the engine (START/RUN) or vehicle power (ON), only when the vehicle is not in motion. In an emergency situation while the vehicle is in motion, you are able to turn the engine off and to the ACC position by pressing the ENGINE START/STOP button for more than 2 seconds or 3 times successively within 3 seconds. If the vehicle is still moving, you can restart the engine without depressing the brake pedal by pressing the ENGINE START/STOP button with the shift lever in the N (Neutral) position.

ACC(Accessory)



Orange indicator

• With manual transaxle

Press the ENGINE START/STOP button when the button is in the OFF position without depressing the clutch pedal.

• With automatic transaxle

Press the ENGINE START/STOP button while it is in the OFF position without depressing the brake pedal.

The steering wheel unlocks and electrical accessories are operational.

If the ENGINE START/STOP button is in the ACC position for more than 1 hour, the button is turned off automatically to prevent battery discharge.

ON



Green indicator

• With manual transaxle

Press the ENGINE START/STOP button when the button is in the ACC position without depressing the clutch pedal.

• With automatic transaxle

Press the ENGINE START/STOP button while it is in the ACC position without depressing the brake pedal.

The warning lights can be checked before the engine is started. Do not leave the ENGINE START/STOP button in the ON position for a long time. The battery may discharge, because the engine is not running.

YN ENG 5.QXP 4/16/2012 10:02 AM Page 10

START/RUN



Not illuminated

• With manual transaxle

To start the engine, depress the clutch pedal and brake pedal, then press the ENGINE START/STOP with the shift lever in the N (Neutral) position.

• With automatic transaxle

To start the engine, depress the brake pedal and press the ENGINE START/ STOP button with the shift lever in the P (Park) or the N (Neutral) position. For your safety, start the engine with the shift lever in the P (Park) position.

✻ NOTICE

If you press the ENGINE START/STOP button without depressing the clutch pedal for manual transaxle vehicles or without depressing the brake pedal for automatic transaxle vehicles, the engine will not start and the ENGINE START/STOP button changes as follow: OFF ➔ACC ➔ ON ➔ OFF or ACC

✻ NOTICE

If you leave the ENGINE START/ STOP button in the ACC or ON position for a long time, the battery will discharge.

⚠ WARNING

- **Never press the ENGINE START/STOP button while the vehicle is in motion. This would result in loss of directional control and braking function, which could cause an accident.**
- **The anti-theft steering column lock is not a substitute for the parking brake. Before leaving the driver's seat, always make sure the shift lever is engaged in P (Park), set the parking brake fully and shut the engine off. Unexpected and sudden vehicle movement may occur if these precautions are not taken.**

(Continued)

(Continued)

- **Never reach for the ENGINE START/STOP button or any other controls through the steering wheel while the vehicle is in motion. The presence of your hand or arm in the area could cause loss of vehicle control, an accident and serious bodily injury or death.**
- **Do not place any movable objects around the driver's seat as they may move while driving, interfere with the driver and lead to an accident.**

YN ENG 5.QXP 4/16/2012 10:02 AM Page 11

Starting the engine

⚠ WARNING

Always wear appropriate shoes when operating your vehicle. Unsuitable shoes (high heels, ski boots,etc.) may interfere with your ability to use the brake and accelerator pedal, and the clutch (if equipped).

✻ NOTICE - Kick down mechanism (if equipped)

If your vehicle is equipped with a kick down mechanism in the accelerator pedal, it prevents you from driving at full throttle unintentionally by making the driver require increased effort to depress the accelerator pedal. However, if you depress the pedal more than approximately 80%, the vehicle can be at full throttle and the accelerator pedal will be easier to depress. This is not a malfunction but a normal condition.

Starting the gasoline engine (if equipped)

1. Carry the smart key or leave it inside the vehicle.
2. Make sure the parking brake is firmly applied
3. **Manual Transaxle** - Depress the clutch pedal fully and shift the transaxle into Neutral. Keep the clutch pedal and brake pedal depressed while starting the engine.

   Automatic Transaxle - Place the transaxle shift lever in P (Park). Depress the brake pedal fully.

   You can also start the engine when the shift lever is in the N (Neutral) position.
4. Press the ENGINE START/STOP button.
5. In extremely cold weather (below -18°C / 0°F) or after the vehicle has not been operated for several days, let the engine warm up without depressing the accelerator.

Whether the engine is cold or warm, it should be started without depressing the accelerator.

Starting the diesel engine (if equipped)

To start the diesel engine when the engine is cold, it has to be pre-heated before starting the engine and then have to be warmed up before starting to drive.

1. Make sure the parking brake is applied.
2. **Manual Transaxle** - Depress the clutch pedal fully and shift the transaxle into Neutral. Keep the clutch pedal and brake pedal depressed while pressing the ENGINE START/STOP button to the START position.

   Automatic Transaxle - Place the transaxle shift lever in P (Park). Depress the brake pedal fully.

   You can also start the engine when the shift lever is in the N (Neutral) position.

YN ENG 5.QXP 4/16/2012 10:02 AM Page 12

Glow indicator light

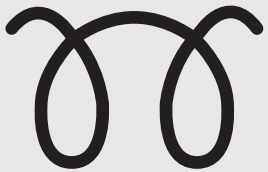

W-60

3. Press the ENGINE START/STOP button while depressing the brake pedal.
4. Continue depressing the brake pedal until the illuminated glow indicator goes off. (approximately 5 seconds)
5. The engine starts running when the glow indicator goes off.

✻ NOTICE

If the ENGINE START/STOP button is pressed once more while the engine is pre-heating, the engine may start.

Starting and stopping the engine for turbocharger intercooler

1. Do not race or accelerate the engine immediately after starting.
   If the engine is cold, idle for several seconds before sufficient lubrication is ensured in the turbocharger unit.
2. After high speed or extended driving, requiring a heavy engine load, run the engine on idle condition about 1 minute before turning it off.
   This idle time will allow the turbocharger to cool prior to shutting the engine off.

⚠ CAUTION

Do not turn the engine off immediately after it has been subjected to a heavy load. Doing so may cause severe damage to the engine or turbocharger unit.

- Even if the smart key is in the vehicle, if it is far away from you, the engine may not start.
- When the ENGINE START/STOP button is in the ACC position or above, if any door is opened, the system checks for the smart key. If the smart key is not in the vehicle, the "KEY OUT" indicator will blink on the instrument cluster. And if all doors are closed, the chime will sound for 5 seconds. The indicator or warning will turn off while the vehicle is moving. Always have the smart key with you.

⚠ WARNING

The engine will start, only when the smart key is in the vehicle.

Never allow children or any person who is unfamiliar with the vehicle touch the ENGINE START/STOP button or related parts.

YN ENG 5.QXP 4/16/2012 10:02 AM Page 13

⚠ CAUTION

If the engine stalls while the vehicle is in motion, do not attempt to move the shift lever to the P (Park) position. If the traffic and road conditions permit, you may put the shift lever in the N (Neutral) position while the vehicle is still moving and press the ENGINE START/STOP button in an attempt to restart the engine.

✻ NOTICE

- **If the battery is weak or the smart key does not work correctly, you can start the engine by pressing the engine start/stop button with the smart key.**
- **When the stop lamp fuse is blown, you can't start the engine normally. Replace the fuse with a new one. If it is not possible, you can start the engine by pressing the ENGINE START/STOP button for 10 seconds while it is in the ACC position. The engine can start without depressing the brake pedal. But for your safety always depress the brake pedal before starting the engine. (Automatic transaxle vehicle)**
  When the clutch switch is damage, you can not start the engine normally. Replace the clutch switch with a new one. If it is not possible you can start the engine by pressing the ENGINE START/STOP for 10 seconds with pressing the brake pedal. (Manual transaxle vehicle)

⚠ CAUTION

Do not press the ENGINE START/STOP button for more than 10 seconds except when the stop lamp fuse is blown.

YN ENG 5.QXP 4/16/2012 10:02 AM Page 14

ISG(IDLE STOP AND GO) SYSTEM (IF EQUIPPED)

Your vehicle may be equipped with the ISG system, which reduces fuel consumption by automatically shutting down the engine, when the vehicle is at a standstill.

(For example : red light, stop sign and traffic jam)

The engine starts automatically as soon as the starting conditions are met.

✻ NOTICE

When the engine automatically starts by the ISG system, some warning lights(ABS, ESP, ESP OFF, EPS or Parking brake warning light) may turn on for a few seconds.

This happens because of low battery voltage. It does not mean the system is malfunctioning.

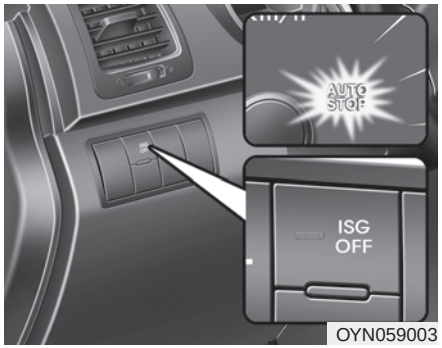

OYN059003

ISG(Idle Stop and Go) Operation

The ISG system is ON whenever the ignition switch is turned on.

The engine will enter the idle stop (AUTO STOP) mode automatically when all of the essential conditions are met.

For example;

- The gear is not engaged & clutch not pressed
- The vehicle speed should be over 10km/h at least once after key starting or idle starting.
- The vehicle speed should be below 5km/h
- The outside temperature is between 2°C to 35°C
- The engine coolant temperature is not too low
- Battery charge status is adequately high
- The driver's seat belt is fastened
- The driver's door and hood are closed.

It could be different up to the vehicle condition.

When the engine automatically stops, the "AUTO STOP" indicator on the cluster panel will illuminate.

After you press the clutch pedal, the engine will start automatically. The "AUTO STOP" indicator on the cluster panel will turn off. You can continue driving.

YN ENG 5.QXP 4/16/2012 10:02 AM Page 15

ISG auto-starting

Before and after the engine enters the idle stop mode, the ISG system will automatically check all the necessary items such as the safety of the vehicle and passenger comfort.

The engine will start automatically without the driver's action if any of the following occurs:

- If the brake vacuum pressure is low
- If the fan speed of the manual climate control system is set above the 3rd position when the air conditioning is on
- If the fan speed of the automatic climate control system is set above the 6th position when the air conditioning is on
- When a certain amount of time has passed with the climate control system on
- When the defroster is ON
- When the battery charge status is low
- If the vehicle speed is over 5km/h by rolling down a hill

It could be different up to the vehicle condition.

When the automatic starting occurs, the "AUTO STOP" indicator on the cluster will blink for 5 seconds.

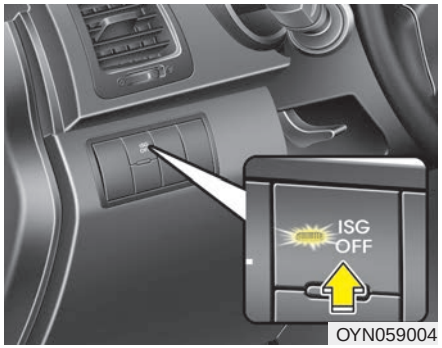

OYN059004

ISG(Idle Stop and Go) system deactivation

If you desire to deactivate the ISG system, you can do it temporarily by pressing the ISG OFF button located on the left side of the instrument panel.

After pressing the ISG OFF button, the light on the button will illuminate.

The ISG system will activate by pressing the ISG OFF button again and the button light will turn off.

✻ NOTICE

- **When the ISG related sensors or system error occurs, the ISG OFF button light will illuminate. If the button light is not turned off by pressing the ISG OFF button again or if the ISG system continuously does not work correctly, we recommend that you contact an authorized Kia dealer.**
- **Also, if the battery charging status is low, the ISG OFF button light will illuminate. When the button light comes on, it may stop illuminating after driving your vehicle at approximately 80 km/h for a maximum of two hours and setting the fan speed control knob below the 2nd position. If the button light continues to be illuminated in spite of the procedure, we recommend that you contact an authorized Kia dealer.**

⚠ WARNING

When the engine is in Idle Stop mode, it's possible to restart the engine without the driver taking any action.

Before leaving the car or doing anything in the engine room area, stop the engine by turning the ignition key to the LOCK position or removing it.

YN ENG 5.QXP 4/16/2012 10:02 AM Page 16

MANUAL TRANSAXLE (IF EQUIPPED)

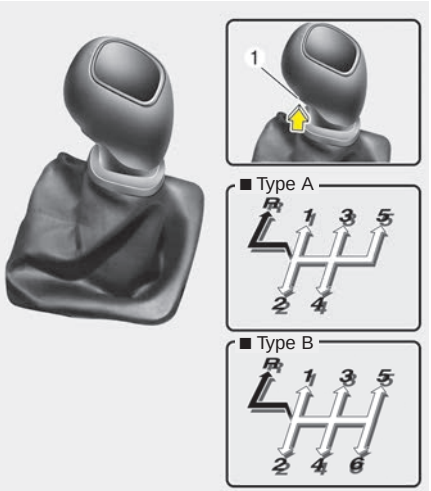

⇨ The shift lever can be moved without pulling the button (1).

➡ The button (1) must be pulled up while moving the shift lever.

OED050001

* The actual shift lever in the vehicle may differ from the illustration.

Manual transaxle operation

The manual transaxle has 5(6, if equipped) forward gears.

This shift pattern is imprinted on the shift knob. The transaxle is fully synchronized in all forward gears so shifting to either a higher or a lower gear is easily accomplished.

Press the clutch pedal down fully while shifting, then release it slowly.

If your vehicle is equipped with an ignition lock switch, the engine will not start when starting the engine without depressing the clutch pedal. (if equipped)

The gearshift lever must be returned to the neutral position before shifting into R (Reverse).

The button (1) located immediately below the shift knob must be pulled upward while moving the shift lever to the R position. (if equipped)

Make sure the vehicle is completely stopped before shifting into R (Reverse).

Never operate the engine with the tachometer (rpm) in the red zone.

⚠ CAUTION

- ***When downshifting from fifth gear to fourth gear, caution should be taken not to inadvertently press the gear shift lever sideways in such a manner that second gear is engaged. Such a drastic downshift may cause the engine speed to increase to the point that the tachometer will enter the red-zone. Such over-revving of the engine may possibly cause engine and the transaxle damage.***
- ***Do not downshift more than 2 gears or downshift the gear when the engine is running at high speed (5,000 RPM or higher). Such a downshifting may damage the engine and the transaxle.***

YN ENG 5.QXP 4/16/2012 10:02 AM Page 17

- During cold weather, shifting may be difficult until the transaxle lubricant has warmed up. This is normal and not harmful to the transaxle.
- If you've come to a complete stop and it's hard to shift into 1st or R(Reverse), leave the shift lever at N(Neutral) position and release the clutch. Press the clutch pedal back down, and then shift into 1st or R(Reverse) gear position.

⚠ CAUTION

- ***To avoid premature clutch wear and damage, do not drive with your foot resting on the clutch pedal. Also, don't use the clutch to hold the vehicle stopped on an uphill grade, while waiting for a traffic light, etc.***
- ***Do not use the shift lever as a handrest during driving, as this can result in premature wear of the transaxle shift forks.***

⚠ WARNING

Before leaving the driver's seat, always set the parking brake fully and shut the engine off. Then make sure the transaxle is shifted into 1st gear when the vehicle is parked on a level or uphill grade, and shifted into R (Reverse) on a downhill grade. Unexpected and sudden vehicle movement can occur if these precautions are not followed in the order identified.

Using the clutch

The clutch should be pressed all the way to the floor before shifting, then released slowly. The clutch pedal should always be fully released while driving. Do not rest your foot on the clutch pedal while driving. This can cause unnecessary wear. Do not partially engage the clutch to hold the car on an incline. This causes unnecessary wear. Use the foot brake or parking brake to hold the car on an incline. Do not operate the clutch pedal rapidly and repeatedly.

Downshifting

When you must slow down in heavy traffic or while driving up steep hills, downshift before the engine starts to labor. Downshifting reduces the chance of stalling and gives better acceleration when you again need to increase your speed. When the vehicle is traveling down steep hills, downshifting helps maintain safe speed and prolongs brake life.

YN ENG 5.QXP 4/16/2012 10:02 AM Page 18

Good driving practices

- Never take the vehicle out of gear and coast down a hill. This is extremely hazardous. Always leave the vehicle in gear.
- Don't "ride" the brakes. This can cause them to overheat and malfunction. Instead, when you are driving down a long hill, shift to a lower gear. When you do this, engine braking will help slow down the vehicle.
- Slow down before shifting to a lower gear. This will help avoid over-revving the engine, which can cause damage.
- Slow down when you encounter cross winds. This gives you much better control of your vehicle.
- Be sure the vehicle is completely stopped before you attempt to shift into reverse. The transaxle can be damaged if you do not. To shift into reverse, depress the clutch, move the shift lever to neutral, then shift to the reverse position.
- Exercise extreme caution when driving on a slippery surface. Be especially careful when braking, accelerating or shifting gears. On a slippery surface, an abrupt change in vehicle speed can cause the drive wheels to lose traction and the vehicle to go out of control.

⚠ WARNING

- **Always buckle-up! In a collision, an unbelted occupant is significantly more likely to be seriously injured or killed than a properly belted occupant.**
- **Avoid high speeds when cornering or turning.**
- **Do not make quick steering wheel movements, such as sharp lane changes or fast, sharp turns.**
- **The risk of rollover is greatly increased if you lose control of your vehicle at highway speeds.**
- **Loss of control often occurs if two or more wheels drop off the roadway and the driver oversteers to reenter the roadway.**
- **In the event your vehicle leaves the roadway, do not steer sharply. Instead, slow down before pulling back into the travel lanes.**
- **Never exceed posted speed limits.**

YN ENG 5.QXP 4/16/2012 10:02 AM Page 19

AUTOMATIC TRANSAXLE (IF EQUIPPED)

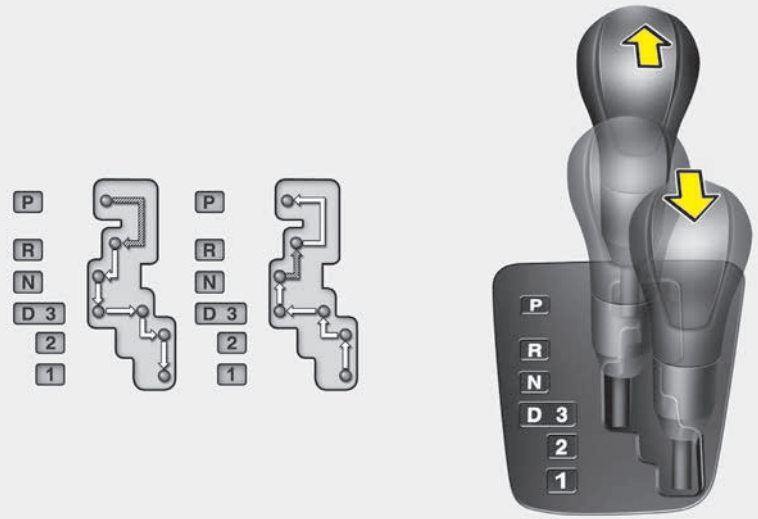

Depress the brake pedal when shifting, if your vehicle is equipped shift lock system.

The shift lever can be moved freely.

OYN059005

Automatic transaxle operation

The automatic transaxle has 4 forward speeds and one reverse speed. The individual speeds are selected automatically, depending on the position of the shift lever.

✻ NOTICE

The first few shifts on a new vehicle, if the battery has been disconnected, may be somewhat abrupt. This is a normal condition, and the shifting sequence will adjust after shifts are cycled a few times by the TCM (Transaxle Control Module) or PCM (Powertrain Control Module).

YN ENG 5.QXP 4/16/2012 10:02 AM Page 20

For smooth operation, depress the brake pedal when shifting from N (Neutral) to a forward or reverse gear.

⚠ WARNING - Automatic transaxle

- **Always check the surrounding areas near your vehicle for people, especially children, before shifting a car into D (Drive) or R (Reverse).**
- **Before leaving the driver's seat, always make sure the shift lever is in the P (Park) position; then set the parking brake fully and shut the engine off. Unexpected and sudden vehicle movement can occur if these precautions are not followed in the order identified.**

⚠ CAUTION

- ***To avoid damage to your transaxle, do not accelerate the engine in R (Reverse) or any forward gear position with the brakes on.***
- ***When stopped on an upgrade, do not hold the vehicle with engine power. Use the service brake or the parking brake.***
- ***Do not shift from N (Neutral) or P (Park) into D (Drive), or R (Reverse) when the engine is above idle speed.***

Transaxle ranges

P (Park)

Always come to a complete stop before shifting into P (Park). This position locks the transaxle and prevents the front wheels from rotating.

⚠ WARNING

- **Shifting into P (Park) while the vehicle is in motion will cause the drive wheels to lock which will cause you to lose control of the vehicle.**
- **Do not use the P (Park) position in place of the parking brake. Always make sure the shift lever is latched in the P (Park) position and set the parking brake fully.**
- **Never leave a child unattended in a vehicle.**

⚠ CAUTION

The transaxle may be damaged if you shift into P (Park) while the vehicle is in motion.

YN ENG 5.QXP 4/16/2012 10:02 AM Page 21

R (Reverse)

Use this position to drive the vehicle backward.

⚠ CAUTION

Always come to a complete stop before shifting into or out of R (Reverse); you may damage the transaxle if you shift into R while the vehicle is in motion, except as explained in "Rocking the vehicle" in this section.

N (Neutral)

The wheels and transaxle are not locked. The vehicle will roll freely even on the slightest incline unless the parking brake or service brakes are applied.

D (Drive)

This is the normal forward driving position. The transaxle will automatically shift through a 4-gear sequence, providing the best fuel economy and power.

For extra power when passing another vehicle or climbing grades, depress the accelerator fully, at which time the transaxle will automatically downshift to the next lower gear.

✻ NOTICE

Always ensure vehicle is stationary, at a complete stop, before selecting D (Drive).

3 (Third Gear, if equipped)

Move the shift lever to this position for towing a trailer during hill climbing.

This position also provides engine braking when going down hills.

2 (Second Gear)

Use 2 (Second Gear) for more power when climbing hills and for increased braking when going down hills. This position also helps reduce wheel spin on slippery surfaces. When the shift lever is placed in 2 (Second Gear), the transaxle will automatically shift from first to second gear.

1 (First Gear)

Move the shift lever to this position in hard pulling situations and for climbing steep grades.

⚠ CAUTION

Do not exceed the recommended maximum speeds in 2 (Second Gear) or 1 (First Gear). Operating the vehicle at speeds above the maximum recommended, for 2 (Second Gear) or 1 (First Gear) may cause excessive heat to develop which could result in damage to or failure of the automatic transaxle.

YN ENG 5.QXP 4/16/2012 10:02 AM Page 22

Shift lock system (if equipped)

For your safety, the automatic transaxle has a shift lock system which prevents shifting the transaxle from P (Park) or N (Neutral) into R (Reverse) unless the brake pedal is depressed.

To shift the transaxle from P (Park) or N (Neutral) into R (Reverse):

1. Depress and hold the brake pedal.
2. Move the shift lever.

If the brake pedal is repeatedly depressed and released with the shift lever in the P (Park) position, a chattering noise near the shift lever may be heard. This is a normal condition.

⚠ WARNING

Always fully depress the brake pedal before and while shifting out of the P (Park) position into another position to avoid inadvertent motion of the vehicle which could injure persons in or around the car.

Good driving practices

- Never move the shift lever from P (Park) or N (Neutral) to any other position with the accelerator pedal depressed.
- Never move the gear selector lever into P (Park) when the vehicle is in motion.
- Be sure the car is completely stopped before you attempt to shift into R (Reverse) or D (Drive).
- Never take the vehicle out of gear and coast down a hill. This may be extremely hazardous. Always leave the car in gear when moving.
- Do not "ride" the brakes. This can cause them to overheat and malfunction. Instead, when you are driving down a long hill, slow down and shift to a lower gear. When you do this, engine braking will help slow down the vehicle.
- Slow down before shifting to a lower gear. Otherwise, the lower gear may not be engaged.
- Always use the parking brake. Do not depend on placing the transaxle in P (Park) to keep the vehicle from moving.
- Exercise extreme caution when driving on a slippery surface. Be especially careful when braking, accelerating or shifting gears. On a slippery surface, an abrupt change in vehicle speed can cause the drive wheels to lose traction and the vehicle to go out of control.
- Optimum vehicle performance and economy is obtained by smoothly depressing and releasing the accelerator pedal.

YN ENG 5.QXP 4/16/2012 10:02 AM Page 23

⚠ WARNING

- **Always buckle-up! In a collision, an unbelted occupant is significantly more likely to be seriously injured or killed than a properly belted occupant.**
- **Avoid high speeds when cornering or turning.**
- **Do not make quick steering wheel movements, such as sharp lane changes or fast, sharp turns.**
- **The risk of rollover is greatly increased if you lose control of your vehicle at highway speeds.**
- **Loss of control often occurs if two or more wheels drop off the roadway and the driver oversteers to reenter the roadway.**
- **In the event your vehicle leaves the roadway, do not steer sharply. Instead, slow down before pulling back into the travel lanes.**
- **Never exceed posted speed limits.**

⚠ WARNING

If your vehicle becomes stuck in snow, mud, sand, etc., then you may attempt to rock the vehicle free by moving it forward and backward. Do not attempt this procedure if people or objects are anywhere near the vehicle. During the rocking operation the vehicle may suddenly move forward of backward as it becomes unstuck, causing injury or damage to nearby people or objects.

Moving up a steep grade from a standing start

To move up a steep grade from a standing start, depress the brake pedal, shift the shift lever to D (Drive). Select the appropriate gear depending on load weight and steepness of the grade, and release the parking brake. Depress the accelerator gradually while releasing the service brakes.

When accelerating from a stop on a steep hill, the vehicle may have a tendency to roll backwards. Shifting the shift lever into 2 (Second Gear) will help prevent the vehicle from rolling backwards.

YN ENG 5.QXP 4/16/2012 10:02 AM Page 24

BRAKE SYSTEM

Power brakes

Your vehicle has power-assisted brakes that adjust automatically through normal usage.

In the event that the power-assisted brakes lose power because of a stalled engine or some other reason, you can still stop your vehicle by applying greater force to the brake pedal than you normally would. The stopping distance, however, will be longer.

When the engine is not running, the reserve brake power is partially depleted each time the brake pedal is applied. Do not pump the brake pedal when the power assist has been interrupted.

Pump the brake pedal only when necessary to maintain steering control on slippery surfaces.

⚠ WARNING - Brakes

- **Do not drive with your foot resting on the brake pedal. This will create abnormal high brake temperatures, excessive brake lining and pad wear, and increased stopping distances.**

(Continued)

(Continued)

- **When descending a long or steep hill, shift to a lower gear and avoid continuous application of the brakes. Continuous brake application will cause the brakes to overheat and could result in a temporary loss of braking performance.**
- **Wet brakes may impair the vehicle's ability to safely slow down; the vehicle may also pull to one side when the brakes are applied. Applying the brakes lightly will indicate whether they have been affected in this way. Always test your brakes in this fashion after driving through deep water. To dry the brakes, apply them lightly while maintaining a safe forward speed until brake performance returns to normal.**
- **Always, confirm the position of the brake and accelerator pedal before driving. If you don't check the position of the accelerator and brake pedal before driving, you may depress the accelerator instead of the brake pedal. It may cause a serious accident.**

In the event of brake failure

If service brakes fail to operate while the vehicle is in motion, you can make an emergency stop with the parking brake. The stopping distance, however, will be much greater than normal.

⚠ WARNING - Parking brake

Applying the parking brake while the vehicle is moving at normal speeds can cause a sudden loss of control of the vehicle. If you must use the parking brake to stop the vehicle, use great caution in applying the brake.

YN ENG 5.QXP 4/16/2012 10:02 AM Page 25

Disc brakes wear indicator

When your brake pads are worn and new pads are required, you will hear a high-pitched warning sound from your front brakes or rear brakes (if equipped). You may hear this sound come and go or it may occur whenever you depress the brake pedal.

Please remember that some driving conditions or climates may cause a brake squeal when you first apply (or lightly apply) the brakes. This is normal and does not indicate a problem with your brakes.

⚠ CAUTION

- ***To avoid costly brake repairs, do not continue to drive with worn brake pads.***
- ***Always replace brake pads as complete front or rear axle sets.***

⚠ WARNING - Brake wear

This brake wear warning sound means your vehicle needs service. If you ignore this audible warning, you will eventually lose braking performance, which could lead to a serious accident.

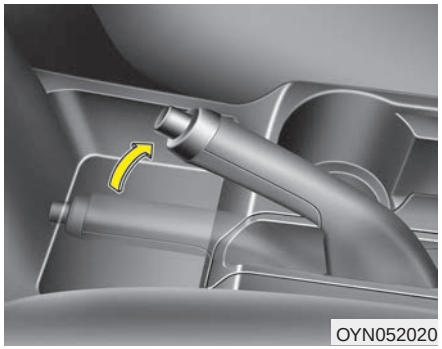

OYN052020

Parking brake

Applying the parking brake

To engage the parking brake, first apply the foot brake and then without pressing the release button in, pull the parking brake lever up as far as possible. In addition it is recommended that when parking the vehicle on a gradient, the shift lever should be positioned in the appropriate low gear on manual transaxle vehicles or in the P (Park) position for automatic transaxle vehicles.

⚠ CAUTION

- ***Driving with the parking brake applied will cause excessive brake pad (or lining) and brake rotor wear.***
- ***Do not operate the parking brake while the vehicle is moving except in an emergency situation. It could damage the vehicle system and make endanger driving safety.***

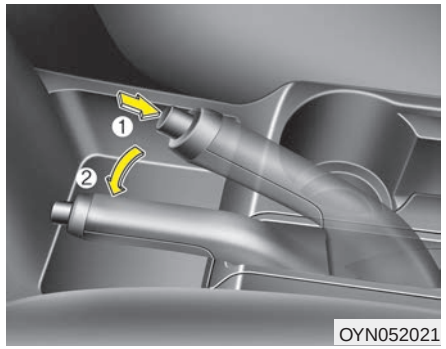

Releasing the parking brake

To release the parking brake, first apply the foot brake and pull up the parking brake lever slightly. Secondly press the release button (1) and lower the parking brake lever (2) while holding the button.

⚠ WARNING

- **To prevent unintentional movement when stopped and leaving the vehicle, do not use the shift lever instead of the parking brake. Set the parking brake AND make sure the shift lever is securely positioned in 1st (First) gear or R (Reverse) for manual transaxle equipped vehicles and in P (Park) for automatic transaxle equipped vehicles.**
- **Never allow anyone who is unfamiliar with the vehicle to touch the parking brake. If the parking brake is released unintentionally, serious injury may occur.**
- **All vehicles should always have the parking brake fully engaged when parking to avoid inadvertent movement of the vehicle which can injure occupants or pedestrians.**



Check the brake warning light by turning the ignition switch ON (do not start the engine). This light will illuminate when the parking brake is applied with the ignition switch in the START or ON position.

Before driving, be sure the parking brake is fully released and the brake warning light is off.

If the brake warning light remains on after the parking brake is released while the engine is running, there may be a malfunction in the brake system. Immediate attention is necessary.

If at all possible, cease driving the vehicle immediately. If that is not possible, use extreme caution while operating the vehicle and only continue to drive the vehicle until you can reach a safe location or repair shop.

YN ENG 5.QXP 4/16/2012 10:02 AM Page 27

Anti-lock brake system (ABS) (if equipped)

⚠ WARNING

ABS (or ESP) will not prevent accidents due to improper or dangerous driving maneuvers. Even though vehicle control is improved during emergency braking, always maintain a safe distance between you and objects ahead. Vehicle speeds should always be reduced during extreme road conditions.

The braking distance for vehicles equipped with an anti-lock braking system (or Electronic Stability Program System) may be longer than for those without it in the following road conditions.

During these conditions the vehicle should be driven at reduced speeds:

- **Rough, gravel or snow-covered roads.**
- **With tire chains installed.**

(Continued)

(Continued)

- **On roads where the road surface is pitted or has different surface height.**

The safety features of an ABS (or ESP) equipped vehicle should not be tested by high speed driving or cornering. This could endanger the safety of yourself or others.

The ABS continuously senses the speed of the wheels. If the wheels are going to lock, the ABS system repeatedly modulates the hydraulic brake pressure to the wheels.

When you apply your brakes under conditions which may lock the wheels, you may hear a “tik-tik” sound from the brakes, or feel a corresponding sensation in the brake pedal. This is normal and it means your ABS is active.

In order to obtain the maximum benefit from your ABS in an emergency situation, do not attempt to modulate your brake pressure and do not try to pump your brakes. Press your brake pedal as hard as possible or as hard as the situation allows the ABS to control the force being delivered to the brakes.

YN ENG 5.QXP 4/16/2012 10:02 AM Page 28

✻ NOTICE

A click sound may be heard in the engine compartment when the vehicle begins to move after the engine is started. These conditions are normal and indicate that the anti-lock brake system is functioning properly.

- Even with the anti-lock brake system, your vehicle still requires sufficient stopping distance. Always maintain a safe distance from the vehicle in front of you.
- Always slow down when cornering. The anti-lock brake system cannot prevent accidents resulting from excessive speeds.
- On loose or uneven road surfaces, operation of the anti-lock brake system may result in a longer stopping distance than for vehicles equipped with a conventional brake system.



W-78

⚠ CAUTION

- ***If the ABS warning light is on and stays on, you may have a problem with the ABS. In this case, however, your regular brakes will work normally.***
- ***The ABS warning light will stay on for approximately 3 seconds after the ignition switch is ON. During that time, the ABS will go through self-diagnosis and the light will go off if everything is normal. If the light stays on, you may have a problem with your ABS. We recommend that you contact an authorized Kia dealer.***

⚠ CAUTION

- ***When you drive on a road having poor traction, such as an icy road, and operate your brakes continuously, the ABS will be active continuously and the ABS warning light may illuminate. Pull your vehicle over to a safe place and stop the engine.***
- ***Restart the engine. If the ABS warning light is off, then your ABS system is normal. Otherwise, you may have a problem with the ABS. We recommend that you contact an authorized Kia dealer.***

✻ NOTICE

When you jump start your vehicle because of a drained battery, the engine may not run as smoothly and the ABS warning light may turn on at the same time. This happens because of the low battery voltage. It does not mean your ABS is malfunctioning.

- **Do not pump your brakes!**
- **Have the battery recharged before driving the vehicle.**

YN ENG 5.QXP 4/16/2012 10:02 AM Page 29

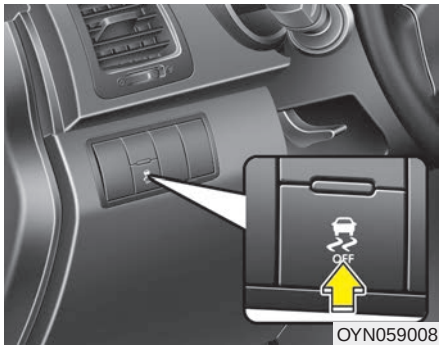

OYN059008

Electronic stability program (ESP) (if equipped)

The Electronic Stability Program (ESP) system is designed to stabilize the vehicle during cornering maneuvers. ESP checks where you are steering and where the vehicle is actually going. ESP applies the brakes at individual wheels and intervenes in the engine management system to stabilize the vehicle.

⚠ WARNING

Never drive too fast according to the road conditions or too quickly when cornering. Electronic stability program (ESP) will not prevent accidents. Excessive speed in turns, abrupt maneuvers and hydroplaning on wet surfaces can still result in serious accidents. Only a safe and attentive driver can prevent accidents by avoiding maneuvers that cause the vehicle to lose traction. Even with ESP installed, always follow all the normal precautions for driving - including driving at safe speeds for the conditions.

The Electronic Stability Program (ESP) system is an electronic system designed to help the driver maintain vehicle control under adverse conditions. It is not a substitute for safe driving practices. Factors including speed, road conditions and driver steering input can all affect whether ESP will be effective in preventing a loss of control. It is still your responsibility to drive and corner at reasonable speeds and to leave a sufficient margin of safety.

When you apply your brakes under conditions which may lock the wheels, you may hear a “tik-tik” sound from the brakes, or feel a corresponding sensation in the brake pedal. This is normal and it means your ESP is active.

✻ NOTICE

A click sound may be heard in the engine compartment when the vehicle begins to move after the engine is started. These conditions are normal and indicate that the Electronic Stability Program System is functioning properly.

YN ENG 5.QXP 4/16/2012 10:02 AM Page 30

ESP operation

ESP ON condition

-

- When the ignition is turned ON, ESP and ESP OFF indicator lights illuminate for approximately 3 seconds, then ESP is turned on.
- Press the ESP OFF button for at least half a second after turning the ignition ON to turn ESP off. (ESP OFF indicator will illuminate). To turn the ESP on, press the ESP OFF button (ESP OFF indicator light will go off).
- When starting the engine, you may hear a slight ticking sound. This is the ESP performing an automatic system self-check and does not indicate a problem.

When operating



When the ESP is in operation, ESP indicator light blinks.

- When the Electronic Stability Program is operating properly, you can feel a slight pulsation in the vehicle. This is only the effect of brake control and indicates nothing unusual.
- When moving out of the mud or slippery road, pressing the accelerator pedal may not cause the engine rpm (revolutions per minute) to increase.

ESP operation off

ESP OFF state



- To cancel ESP operation, press the ESP OFF button (ESP OFF indicator light illuminates).
- If the ignition switch is turned to the LOCK position when ESP is off, ESP remains off. Upon restarting the engine, the ESP will automatically turn on again.

YN ENG 5.QXP 4/16/2012 10:02 AM Page 31

■ ESP indicator light



■ ESP OFF indicator light



Indicator light

When ignition switch is turned to the ON position, the indicator light illuminates, then goes off if the ESP system is operating normally.

The ESP indicator light blinks whenever ESP is operating or illuminates when ESP fails to operate.

ESP OFF indicator light comes on when the ESP is turned off with the button.

⚠ CAUTION

Driving with varying tire or wheel sizes may cause the ESP system to malfunction. When replacing tires, make sure they are the same size as your original tires.

⚠ WARNING

The Electronic Stability Program system is only a driving aid; use precautions for safe driving by slowing down on curved, snowy, or icy roads. Drive slowly and don't attempt to accelerate whenever the ESP indicator light is blinking, or when the road surface is slippery.

✻ NOTICE

After reconnecting or recharging a discharged battery, the ESP OFF indicator may illuminate. In this case, turn the steering wheel 360 degrees to the left and 360 degrees to the right while the ignition switch is in the ON position. Then, restart the engine after the ignition is off. If the ESP OFF indicator does not turn off, we recommend that the system be checked by an authorized Kia dealer.

ESP OFF usage

When driving

- ESP should be turned on for daily driving whenever possible.
- To turn ESP off while driving, press the ESP OFF button while driving on a flat road surface.

⚠ WARNING

Never press ESP OFF button while ESP is operating (ESP indicator light blinks).

If ESP is turned off while ESP is operating, the vehicle may slip out of control.

✻ NOTICE

- **When operating the vehicle on a dynamometer, ensure that the ESP is turned off (ESP OFF light illuminated). If the ESP is left on, it may prevent the vehicle speed from increasing, and result in false diagnosis.**
- **Turning the ESP off does not affect ABS or brake system operation.**

YN ENG 5.QXP 4/16/2012 10:02 AM Page 32

Hill-start assist control (HAC) (if equipped)

Hill start Assist Control is a comfort function. The main intend is to prevent the vehicle from rolling backwards while driving off uphill on an inclined surface. HAC holds the braking pressure builtup by driver during stopping procedure for 2 seconds after releasing brake pedal.

During the pressure-hold period, the driver has enough time to press the accelerator pedal to drive off.

The braking pressure is reduced as soon as the system detects the driver's intention to drive off.

⚠ WARNING

The HAC is usually activated only for 2 seconds. The driver should be careful from the rolling backward causing the accident with behind objects or human, when the driver may feel the unintended rolling backward while driving off on hill due to insufficient brake hold pressure built-up by driver during stopping procedure.

✻ NOTICE

- **The HAC does not operate when the transaxle shift lever is in the P (Park) or N (Neutral) position.**
- **The HAC activates even though the ESP is off but it does not activate when the ESP has malfunctioned.**

Emergency Stop Signal (ESS) (if equipped)

The Emergency Stop Signal system alerts the driver behind by blinking the stop light when the vehicle is braked rapidly and severely.

The system is activated when:

- The vehicle suddenly stops (vehicle speed is over 55km/h and the vehicle deceleration at greater than 7 m/s^2)
- The ABS is activating

When the vehicle deceleration at less than 4 m/s^2 and the ABS deactivates or the sudden stop situation is over, the stop light blinking will stop. You can turn it off manually by pushing the hazard warning flasher switch.

⚠ CAUTION

The Emergency Stop Signal (ESS) system will not work if the hazard warning flasher is already on.

YN ENG 5.QXP 4/16/2012 10:02 AM Page 33

Vehicle stability management (VSM) (if equipped)

This system provides further enhancements to vehicle stability and steering responses when a vehicle is driving on a slippery road or a vehicle detected changes in coefficient of friction between right wheels and left wheels when braking.

VSM operation

When the VSM is operating, the steering wheel may be controlled.

When the vehicle stability management is operating properly, you can feel a slight pulsation in the vehicle. This is only the effect of brake control and indicates nothing unusual.

The VSM does not operate when:

- Driving on bank road such as gradient or incline
- Driving rearward
- ESP OFF indicator light ( ) remains on the instrument cluster
- EPS indicator light remains on the instrument cluster

VSM operation off

If you press the ESP OFF button to turn off the ESP, the VSM will also cancel and the ESP OFF indicator light ( ) illuminates.

To turn on the VSM, press the button again. The ESP OFF indicator light goes out.

Malfunction indicator

The VSM can be deactivated even if you don't cancel the VSM operation by pressing the ESP OFF button. It indicates that a malfunction has been detected somewhere in the Electric Power Steering system or VSM system. If the ESP indicator light ( ) or EPS warning light remains on, we recommend that you contact an authorized Kia dealer.

✻ NOTICE

- **The VSM is designed to function above approximately 15 km/h (9 mph) on curves.**
- **The VSM is designed to function above approximately 30 km/h (18 mph) when a vehicle is braking on a split-mu road. The split-mu road is made of surfaces which have different friction forces.**

⚠ WARNING

- **The Vehicle Stability Management system is not a substitute for safe driving practices but a supplementary function only. It is the responsibility of the driver to always check the speed and the distance to the vehicle ahead. Always hold the steering wheel firmly while driving.**
- **Your vehicle is designed to activate according to the driver's intention, even with installed VSM. Always follow all the normal precautions for driving at safe speeds for the conditions – including driving inclement weather and on a slippery road.**
- **Driving with varying tire or wheel sizes may cause the VSM system to malfunction. When replacing tires, make sure they are the same size as your original tires.**

YN ENG 5.QXP 4/16/2012 10:02 AM Page 34

Good braking practices

- Check to be sure the parking brake is not engaged and that the parking brake indicator light is out before driving away.
- Driving through water may get the brakes wet. They can also get wet when the vehicle is washed. Wet brakes can be dangerous! Your vehicle will not stop as quickly if the brakes are wet. Wet brakes may cause the vehicle to pull to one side.

  To dry the brakes, apply the brakes lightly until the braking action returns to normal, taking care to keep the vehicle under control at all times. If the braking action does not return to normal, stop as soon as it is safe to do so and we recommend call an authorized Kia dealer.
- Don't coast down hills with the vehicle out of gear. This is extremely hazardous. Keep the vehicle in gear at all times, use the brakes to slow down, then shift to a lower gear so that engine braking will help you maintain a safe speed.
- Don't "ride" the brake pedal. Resting your foot on the brake pedal while driving can be dangerous because the brakes might overheat and lose their effectiveness. It also increases the wear of the brake components.
- If a tire goes flat while you are driving, apply the brakes gently and keep the vehicle pointed straight ahead while you slow down. When you are moving slowly enough for it to be safe to do so, pull off the road and stop in a safe place.
- If your vehicle is equipped with an automatic transaxle, don't let your vehicle creep forward. To avoid creeping forward, keep your foot firmly on the brake pedal when the vehicle is stopped.
- Be cautious when parking on a hill. Firmly engage the parking brake and place the shift lever in P (automatic transaxle) or in first or reverse gear (manual transaxle). If your vehicle is facing downhill, turn the front wheels into the curb to help keep the vehicle from rolling. If your vehicle is facing uphill, turn the front wheels away from the curb to help keep the vehicle from rolling. If there is no curb or if it is required by other conditions to keep the vehicle from rolling, block the wheels.
- Under some conditions your parking brake can freeze in the engaged position. This is most likely to happen when there is an accumulation of snow or ice around or near the rear brakes or if the brakes are wet. If there is a risk that the parking brake may freeze, apply it only temporarily while you put the shift lever in P (automatic transaxle) or in first or reverse gear (manual transaxle) and block the rear wheels so the vehicle cannot roll. Then release the parking brake.
- Do not hold the vehicle on the upgrade with the accelerator pedal. This can cause the transaxle to overheat. Always use the brake pedal or parking brake.

YN ENG 5.QXP 4/16/2012 10:03 AM Page 35

CRUISE CONTROL SYSTEM (IF EQUIPPED)

The cruise control system allows you to program the vehicle to maintain a constant speed without pressing the accelerator pedal.

This system is designed to function above approximately 40 km/h (25 mph).

⚠ WARNING

- **If the cruise control is left on, (CRUISE indicator light in the instrument cluster illuminated) the cruise control can be switched on accidentally. Keep the cruise control system off (CRUISE indicator light OFF) when the cruise control is not in use, to avoid inadvertently setting a speed.**
- **Use the cruise control system only when traveling on open highways in good weather.**
- **Do not use the cruise control when it may not be safe to keep the car at a constant speed, for instance, driving in heavy or varying traffic, or on slippery (rainy, icy or snow-covered) or winding roads or over 6% up-hill or down-hill roads.**
- **Pay particular attention to the driving conditions whenever using the cruise control system.**

⚠ CAUTION

During cruise-speed driving of a manual transaxle vehicle, do not shift into neutral without depressing the clutch pedal, since the engine will be overrevved. If this happens, depress the clutch pedal or release the cruise control ON-OFF switch.

✻ NOTICE

During normal cruise control operation, when the SET switch is activated or reactivated after applying the brakes, the cruise control will energize after approximately 3 seconds. This delay is normal.

✻ NOTICE

To activate cruise control, depress the brake pedal at least once after turning the ignition switch to the ON position or starting the engine. This is to check if the brake switch which is important part to cancel cruise control is in normal condition.

■ Type A



OYN059010

■ Type B

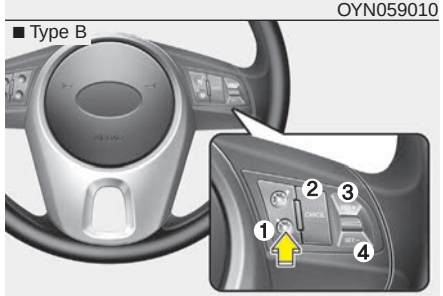

OYN059011

(1) Cruse on-off button
(2) Cancel button
(3) Resume button
(4) Set button

To set cruise control speed:

YN ENG 5.QXP 4/16/2012 10:03 AM Page 36

1. Push the CRUISE ON-OFF button on the steering wheel, to turn the system on. The CRUISE indicator light in the instrument cluster will illuminate.
2. Accelerate to the desired speed, which must be more than 40 km/h (25 mph).

✻ NOTICE - Manual transaxle (if equipped)

For manual transaxle vehicles, you should depress the brake pedal at least once to set the cruise control after starting the engine.


OYN059012

3. Push the SET- switch, and release it at the desired speed. The SET indicator light in the instrument cluster will illuminate. Release the accelerator at the same time. The desired speed will automatically be maintained.

On a steep grade, the vehicle may slow down or speed up slightly while going downhill.


OYN059013

To increase cruise control set speed:

Follow either of these procedures:

- Push the RES+ switch and hold it. Your vehicle will accelerate. Release the switch at the speed you want.
- Push the RES+ switch and release it immediately. The cruising speed will increase by 2.0 km/h (1.2 mph) - Diesel engine each time the RES+ switch is operated in this manner.

YN ENG 5.QXP 4/16/2012 10:03 AM Page 37


OYN059012

To decrease the cruising speed:

Follow either of these procedures:

- Push the SET- switch and hold it. Your vehicle will gradually slow down. Release the switch at the speed you want to maintain.
- Push the SET- switch and release it immediately. The cruising speed will decrease by 2.0 km/h (1.2 mph) - Diesel engine each time the SET- switch is operated in this manner.

To temporarily accelerate with the cruise control on:

If you want to speed up temporarily when the cruise control is on, depress the accelerator pedal. Increased speed will not interfere with cruise control operation or change the set speed.

To return to the set speed, take your foot off the accelerator.


OYN059014

To cancel cruise control, do one of the following:

- Press the brake pedal.
- Press the clutch pedal with a manual transaxle.
- Shift into N (Neutral) with an automatic transaxle.
- Press the CANCEL switch located on the steering wheel.
- Decrease the vehicle speed lower than the memory speed by 20 km/h (12 mph).
- Decrease the vehicle speed to less than approximately 40 km/h (25 mph).

YN ENG 5.QXP 4/16/2012 10:03 AM Page 38

Each of these actions will cancel cruise control operation (the SET indicator light in the instrument cluster will go off), but it will not turn the system off. If you wish to resume cruise control operation, push the RES+ switch located on your steering wheel. You will return to your previously preset speed.


OYN059013

To resume cruising speed at more than approximately 40 km/h (25 mph):

If any method other than the CRUISE ON-OFF switch was used to cancel cruising speed and the system is still activated, the most recent set speed will automatically resume when the RES+ switch is pushed.

It will not resume, however, if the vehicle speed has dropped below approximately 40 km/h (25 mph).

To turn cruise control off, do one of the following:

- Push the CRUISE ON-OFF button (the CRUISE indicator light in the instrument cluster will go off).
- Turn the ignition off.

Both of these actions cancel cruise control operation. If you want to resume cruise control operation, repeat the steps provided in "To set cruise control speed" on the previous page.

YN ENG 5.QXP 4/16/2012 10:03 AM Page 39

SPEED LIMIT CONTROL SYSTEM (IF EQUIPPED)

You can set the speed limit when you don't want to drive over a specific speed.

If you drive over the preset speed limit, the warning system operates (set speed limit will blink and chime will sound) until the vehicle speed returns within the speed limit.

✻ NOTICE

While speed limit control in operation, the cruise control system cannot be activated.

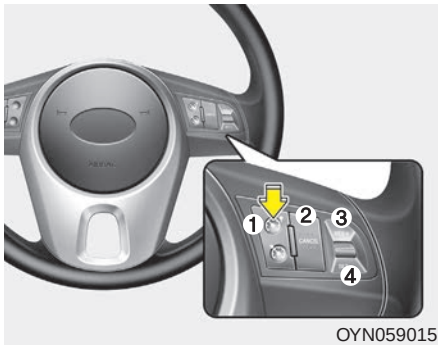

OYN059015

(1) Seed limit ON-OFF button
(2) Cancel button
(3) Resume button
(4) Set button

To set speed limit :

1. Push the speed limit ON-OFF button on the steering wheel, to turn the system on. The speed limit indicator light in the instrument cluster will illuminate.

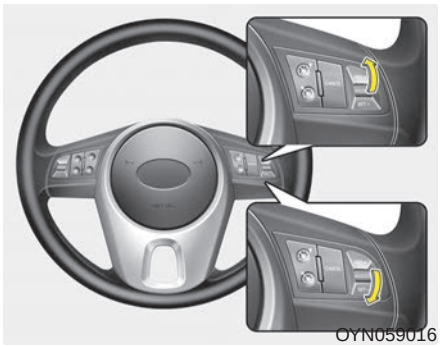

OYN059016

2. Push the SET- switch.
3. Push the RES+ or SET- switch, and release it at the desired speed.

   Push the RES+ or SET- switch and hold it. The speed will increase or decrease by 5 km/h.

   The set speed limit will display on the instrument cluster.

YN ENG 5.QXP 4/16/2012 10:03 AM Page 40

If you would like to drive over the preset speed limit when you depress the accelerator pedal less than approximately 50%, the vehicle speed will maintain within speed limit.

However if you depress the accelerator pedal more than approximately 70%, you can drive over the speed limit. Then the set speed limit will blink and chime will sound until return the vehicle speed within speed limit.



OYN059017

To turn off the speed limit control, do one of the following:

- Press the speed limit ON-OFF switch once again.
- Press the cruise ON-OFF switch (If you press cruise switch, the cruise system will turn on)

If you press the CANCEL switch once, the set speed limit will cancel, but it will not turn the system off. If you wish to reset the speed limit, push the RES+ or SET- switch on your steering wheel to your desired speed.

YN ENG 5.QXP 4/16/2012 10:03 AM Page 41

ECONOMICAL OPERATION

Your vehicle's fuel economy depends mainly on your style of driving, where you drive and when you drive.

Each of these factors affects how many kilometers (miles) you can get from a liter (gallon) of fuel. To operate your vehicle as economically as possible, use the following driving suggestions to help save money in both fuel and repairs:

- Drive smoothly. Accelerate at a moderate rate. Don't make "jack-rabbit" starts or full-throttle shifts and maintain a steady cruising speed. Don't race between stoplights. Try to adjust your speed to the traffic so you don't have to change speeds unnecessarily. Avoid heavy traffic whenever possible. Always maintain a safe distance from other vehicles so you can avoid unnecessary braking. This also reduces brake wear.
- Drive at a moderate speed. The faster you drive, the more fuel your vehicle uses. Driving at a moderate speed, especially on the highway, is one of the most effective ways to reduce fuel consumption.
- Don't "ride" the brake or clutch pedal. This can increase fuel consumption and also increase wear on these components. In addition, driving with your foot resting on the brake pedal may cause the brakes to overheat, which reduces their effectiveness and may lead to more serious consequences.
- Take care of your tires. Keep them inflated to the recommended pressure. Incorrect inflation, either too much or too little, results in unnecessary tire wear. Check the tire pressures at least once a month.
- Be sure that the wheels are aligned correctly. Improper alignment can result from hitting curbs or driving too fast over irregular surfaces. Poor alignment causes faster tire wear and may also result in other problems as well as greater fuel consumption.
- Keep your vehicle in good condition. For better fuel economy and reduced maintenance costs, maintain your vehicle in accordance with the maintenance schedule in Section 7. If you drive your vehicle in severe conditions, more frequent maintenance is required (see Section 7 for details).
- Keep your vehicle clean. For maximum service, your vehicle should be kept clean and free of corrosive materials. It is especially important that mud, dirt, ice, etc. not be allowed to accumulate on the underside of the vehicle. This extra weight can result in increased fuel consumption and also contribute to corrosion.
- Travel lightly. Don't carry unnecessary weight in your vehicle. Weight reduces fuel economy.
- Don't let the engine idle longer than necessary. If you are waiting (and not in traffic), turn off your engine and restart only when you're ready to go.

YN ENG 5.QXP 4/16/2012 10:03 AM Page 42

- Remember, your vehicle does not require extended warm-up. After the engine has started, allow the engine to run for 10 to 20 seconds prior to placing the vehicle in gear. In very cold weather, however, give your engine a slightly longer warm-up period.
- Don't "lug" or "over-rev" the engine. Lugging is driving too slowly in too high a gear resulting engine bucking. If this happens, shift to a lower gear. Over-revving is racing the engine beyond its safe limit. This can be avoided by shifting at the recommended speeds.
- Use your air conditioning sparingly. The air conditioning system is operated by engine power so your fuel economy is reduced when you use it.
- Open windows at high speeds can reduce fuel economy.
- Fuel economy is less in crosswinds and headwinds. To help offset some of this loss, slow down when driving in these conditions.

Keeping a vehicle in good operating condition is important both for economy and safety. Therefore, we recommend that the system be serviced by an authorized Kia dealer.

⚠ WARNING - Engine off during motion

Never turn the engine off to coast down hills or anytime the vehicle is in motion. The power steering and power brakes will not function properly without the engine running. Instead, keep the engine on and downshift to an appropriate gear for engine braking effect. In addition, turning off the ignition while driving could engage the steering wheel lock resulting in loss of vehicle steering which could cause serious injury or death.

YN ENG 5.QXP 4/16/2012 10:03 AM Page 43

SPECIAL DRIVING CONDITIONS

Hazardous driving conditions

When hazardous driving conditions are encountered such as water, snow, ice, mud, sand, or similar hazards, follow these suggestions:

- Drive cautiously and allow extra distance for braking.
- Avoid sudden braking or steering.
- When braking with non-ABS brakes pump the brake pedal with a light up-and-down motion until the vehicle is stopped.

⚠ WARNING - ABS

Do not pump the brake pedal on a vehicle equipped with ABS.

- If stalled in snow, mud, or sand, use second gear. Accelerate slowly to avoid spinning the drive wheels.
- Use sand, rock salt, tire chains, or other non-slip material under the drive wheels to provide traction when stalled in ice, snow, or mud.

⚠ WARNING - Downshifting

Downshifting with an automatic transaxle, while driving on slippery surfaces can cause an accident. The sudden change in tire speed could cause the tires to skid. Be careful when downshifting on slippery surfaces.

Reducing the risk of a rollover

This multi-purpose passenger vehicle is defined as a Multi Purpose Vehicle (MPV). MPV's have higher ground clearance and a narrower track to make them capable of performing in a wide variety of road applications. Specific design characteristics give them a higher center of gravity than ordinary vehicles. An advantage of the higher ground clearance is a better view of the road, which allows you to anticipate problems. They are not designed for cornering at the same speeds as conventional passenger vehicles. Due to this risk, driver and passengers are strongly recommended to buckle their seat belts. In a rollover crash, an unbelted person is more likely to die than a person wearing a seat belt. There are steps that a driver can make to reduce the risk of a rollover. If at all possible, avoid sharp turns or abrupt maneuvers, do not load your roof rack with heavy cargo, and never modify your vehicle in any way.

YN ENG 5.QXP 4/16/2012 10:03 AM Page 44

⚠ WARNING - Rollover

As with other Multi Purpose Vehicle (MPV), failure to operate this vehicle correctly may result in loss of control, an accident or vehicle rollover.

- **Utility vehicles have a significantly higher rollover rate than other types of vehicles.**
- **Specific design characteristics (higher ground clearance, narrower track, etc.) give this vehicle a higher center of gravity than ordinary vehicles.**
- **A MPV is not designed for cornering at the same speeds as conventional vehicles.**
- **Avoid sharp turns or abrupt maneuvers.**
- **In a rollover crash, an unbelted person is significantly more likely to die than a person wearing a seat belt. Make sure everyone in the vehicle is properly buckled up.**

⚠ WARNING

Your vehicle is equipped with tires designed to provide safe ride and handling capability. Do not use a size and type of tire and wheel that is different from the one that is originally installed on your vehicle. It can affect the safety and performance of your vehicle, which could lead to steering failure or rollover and serious injury. When replacing the tires, be sure to equip all four tires with the tire and wheel of the same size, type, tread, brand and load-carrying capacity. If you nevertheless decide to equip your vehicle with any tire/wheel combination not recommended by Kia for off road driving, it is recommended not use these tires for highway driving.

Rocking the vehicle

If it is necessary to rock the vehicle to free it from snow, sand, or mud, first turn the steering wheel right and left to clear the area around your front wheels. Then, shift back and forth between 1st (First) and R (Reverse) in vehicles equipped with a manual transaxle or R (Reverse) and any forward gear in vehicles equipped with an automatic transaxle. Do not race the engine, and spin the wheels as little as possible. If you are still stuck after a few tries, have the vehicle pulled out by a tow vehicle to avoid engine overheating and possible damage to the transaxle.

⚠ CAUTION

Prolonged rocking may cause engine over-heating, transaxle damage or failure, and tire damage.

YN ENG 5.QXP 4/16/2012 10:04 AM Page 45

⚠ WARNING - Spinning tires

Do not spin the wheels, especially at speeds more than 56 km/h (35 mph). Spinning the wheels at high speeds when the vehicle is stationary could cause a tire to overheat which could result in tire damage that may injure bystanders.

✻ NOTICE

The ESP system (if equipped) should be turned OFF prior to rocking the vehicle.

⚠ WARNING

If your vehicle becomes stuck in snow, mud, sand, etc., then you may attempt to rock the vehicle free by moving it forward and backward. Do not attempt this procedure if people or objects are anywhere near the vehicle. During the rocking operation the vehicle may suddenly move forward of backward as it becomes unstuck, causing injury or damage to nearby people or objects.


OUN056051

Smooth cornering

Avoid braking or gear changing in corners, especially when roads are wet. Ideally, corners should always be taken under gentle acceleration. If you follow these suggestions, tire wear will be held to a minimum.


OMC035004

Driving at night

Because night driving presents more hazards than driving in the daylight, here are some important tips to remember:

- Slow down and keep more distance between you and other vehicles, as it may be more difficult to see at night, especially in areas where there may not be any street lights.

YN ENG 5.QXP 4/16/2012 10:04 AM Page 46

- Adjust your mirrors to reduce the glare from other driver's headlights.
- Keep your headlights clean and properly aimed on vehicles not equipped with the automatic headlight aiming feature. Dirty or improperly aimed headlights will make it much more difficult to see at night.
- Avoid staring directly at the headlights of oncoming vehicles. You could be temporarily blinded, and it will take several seconds for your eyes to readjust to the darkness.


1JBB3303

Driving in the rain

Rain and wet roads can make driving dangerous, especially if you're not prepared for the slick pavement. Here are a few things to consider when driving in the rain:

- A heavy rainfall will make it harder to see and will increase the distance needed to stop your vehicle, so slow down.
- Keep your windshield wiping equipment in good shape. Replace your windshield wiper blades when they show signs of streaking or missing areas on the windshield.
- If your tires are not in good condition, making a quick stop on wet pavement can cause a skid and possibly lead to an accident. Be sure your tires are in good shape.
- Turn on your headlights to make it easier for others to see you.
- Driving too fast through large puddles can affect your brakes. If you must go through puddles, try to drive through them slowly.
- If you believe you may have gotten your brakes wet, apply them lightly while driving until normal braking operation returns.

Driving in flooded areas

Avoid driving through flooded areas unless you are sure the water is no higher than the bottom of the wheel hub. Drive through any water slowly. Allow adequate stopping distance because brake performance may be affected.

After driving through water, dry the brakes by gently applying them several times while the vehicle is moving slowly.

Driving off-road

Drive carefully off-road because your vehicle may be damaged by rocks of roots of trees. Become familiar with the off-road conditions where you are going to drive before you begin driving.

YN ENG 5.QXP 4/16/2012 10:04 AM Page 47

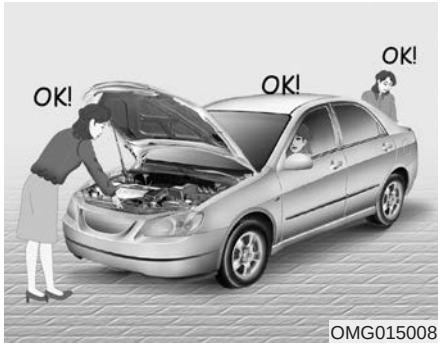

OMG015008

Highway driving

Tires

Adjust the tire inflation pressures to specification. Low tire inflation pressures will result in overheating and possible failure of the tires.

Avoid using worn or damaged tires which may result in reduced traction or tire failure.

✻ NOTICE

Never exceed the maximum tire inflation pressure shown on the tires.

⚠ WARNING

- **Underinflated or overinflated tires can cause poor handling, loss of vehicle control, and sudden tire failure leading to accidents, injuries, and even death. Always check tires for proper inflation before driving. For proper tire pressures, refer to "Tires and wheels" in section 8.**
- **Driving on tires with no or insufficient tread is dangerous. Worn-out tires can result in loss of vehicle control, collisions, injury, and even death. Worn-out tires should be replaced as soon as possible and should never be used for driving. Always check the tire tread before driving your car. For further information and tread limits, refer to "Tires and wheels" in section 7.**

Fuel, engine coolant and engine oil

High speed travel consumes more fuel than urban motoring. Do not forget to check both engine coolant and engine oil.

Drive belt

A loose or damaged drive belt may result in overheating of the engine.

YN ENG 5.QXP 4/16/2012 10:04 AM Page 48

WINTER DRIVING



More weather conditions of winter result in greater wear and other problems. To minimize winter driving problem, you should follow these suggestions:

Snowy or icy conditions

To drive your vehicle in deep snow, it may be necessary to use snow tires or to install tire chains on your tires. If snow tires are needed, it is necessary to select tires equivalent in size and type of the original equipment tires. Failure to do so may adversely affect the safety and handling of your car. Furthermore, speeding, rapid acceleration, sudden brake applications, and sharp turns are potentially very hazardous practices.
During deceleration, use engine braking to the fullest extent. Sudden brake applications on snowy or icy roads may cause skids to occur. You need to keep sufficient distance between the vehicle in operation in front and your vehicle. Also, apply the brake gently. It should be noted that installing tire chains on the tire will provide a greater driving force, but will not prevent side skids.

✻ NOTICE

Tire chains are not legal in all countries. Check the country laws before fitting tire chains.

Snow tires

If you mount snow tires on your vehicle, make sure they are radial tires of the same size and load range as the original tires. Mount snow tires on all four wheels to balance your vehicle's handling in all weather conditions. Keep in mind that the traction provided by snow tires on dry roads may not be as high as your vehicle's original equipment tires. You should drive cautiously even when the roads are clear. Check with the tire dealer for maximum speed recommendations.

⚠ WARNING - Snow tire size

Snow tires should be equivalent in size and type to the vehicle's standard tires. Otherwise, the safety and handling of your vehicle may be adversely affected.

Do not install studded tires without first checking local, state and municipal regulations for possible restrictions against their use.

YN ENG 5.QXP 4/16/2012 10:04 AM Page 49


OED050200

Tire chains

Since the sidewalls of radial tires are thinner, they can be damaged by mounting some types of snow chains on them. Therefore, the use of snow tires is recommended instead of snow chains. Do not mount tire chains on vehicles equipped with aluminum wheels; snow chains may cause damage to the wheels. If snow chains must be used, use wire-type chains with a thickness of less than 15 mm (0.59 in). Damage to your vehicle caused by improper snow chain use is not covered by your vehicle manufacturers warranty.

Install tire chains only on the front tires.

CAUTION

- ***Make sure the snow chains are the correct size and type for your tires. Incorrect snow chains can cause damage to the vehicle body and suspension and may not be covered by your vehicle manufacturer warranty. Also, the snow chain connecting hooks may be damaged from contacting vehicle components causing the snow chains to come loose from the tire. Make sure the snow chains are SAE class "S" certified.***
- ***Always check chain installation for proper mounting after driving approximately 0.5 to 1 km (0.3 to 0.6 miles) to ensure safe mounting. Retighten or remount the chains if they are loose.***

Chain installation

When installing chains, follow the manufacturer's instructions and mount them as tightly as you can. Drive slowly with chains installed. If you hear the chains contacting the body or chassis, stop and tighten them. If they still make contact, slow down until it stops. Remove the chains as soon as you begin driving on cleared roads.

WARNING
- Mounting chains

When mounting snow chains, park the vehicle on level ground away from traffic. Turn on the vehicle Hazard Warning flashers and place a triangular emergency warning device behind the vehicle if available. Always place the vehicle in P (Park), apply the parking brake and turn off the engine before installing snow chains.

YN ENG 5.QXP 4/16/2012 10:04 AM Page 50

⚠ WARNING - Tire chains

- **The use of chains may adversely affect vehicle handling.**
- **Do not exceed 30 km/h (20 mph) or the chain manufacturer's recommended speed limit, whichever is lower.**
- **Drive carefully and avoid bumps, holes, sharp turns, and other road hazards, which may cause the vehicle to bounce.**
- **Avoid sharp turns or locked-wheel braking.**

⚠ CAUTION

- ***Chains that are the wrong size or improperly installed can damage your vehicle's brake lines, suspension, body and wheels.***
- ***Stop driving and retighten the chains any time you hear them hitting the vehicle.***

Use high quality ethylene glycol coolant

Your vehicle is delivered with high quality ethylene glycol coolant in the cooling system. It is the only type of coolant that should be used because it helps prevent corrosion in the cooling system, lubricates the water pump and prevents freezing. Be sure to replace or replenish your coolant in accordance with the maintenance schedule in section 7. Before winter, have your coolant tested to assure that its freezing point is sufficient for the temperatures anticipated during the winter.

Check battery and cables

Winter puts additional burdens on the battery system. Visually inspect the battery and cables as described in section 7. We recommend that the level of charge in your battery be checked by an authorized Kia dealer.

Change to "winter weight" oil if necessary

In some climates it is recommended that a lower viscosity "winter weight" oil be used during cold weather. See section 8 for recommendations. If you aren't sure what weight oil you should use, we recommend that you consult an authorized Kia dealer.

Check spark plugs and ignition system

Inspect your spark plugs as described in section 7 and replace them if necessary. Also check all ignition wiring and components to be sure they are not cracked, worn or damaged in any way.

YN ENG 5.QXP 4/16/2012 10:04 AM Page 51

To keep locks from freezing

To keep the locks from freezing, squirt an approved de-icer fluid or glycerine into the key opening. If a lock is covered with ice, squirt it with an approved de-icing fluid to remove the ice. If the lock is frozen internally, you may be able to thaw it out by using a heated key. Handle the heated key with care to avoid injury.

Use approved window washer anti-freeze in system

To keep the water in the window washer system from freezing, add an approved window washer anti-freeze solution in accordance with instructions on the container. Window washer anti-freeze is available from an authorized Kia dealer and most auto parts outlets. Do not use engine coolant or other types of anti-freeze as these may damage the paint finish.

Don't let your parking brake freeze

Under some conditions your parking brake can freeze in the engaged position. This is most likely to happen when there is an accumulation of snow or ice around or near the rear brakes or if the brakes are wet. If there is a risk the parking brake may freeze, apply it only temporarily while you put the shift lever in P (automatic transaxle) or in first or reverse gear (manual transaxle) and block the rear wheels so the vehicle cannot roll. Then release the parking brake.

Don't let ice and snow accumulate underneath

Under some conditions, snow and ice can build up under the fenders and interfere with the steering. When driving in severe winter conditions where this may happen, you should periodically check underneath the car to be sure the movement of the front wheels and the steering components is not obstructed.

Carry emergency equipment

Depending on the severity of the weather, you should carry appropriate emergency equipment. Some of the items you may want to carry include tire chains, tow straps or chains, flashlight, emergency flares, sand, shovel, jumper cables, window scraper, gloves, ground cloth, coveralls, blanket, etc.

YN ENG 5.QXP 4/16/2012 10:04 AM Page 52

TRAILER TOWING (FOR EUROPE)

If you are considering towing with your vehicle, you should first check with your country's Department of Motor Vehicles to determine their legal requirements.

Since laws vary the requirements for towing trailers, cars, or other types of vehicles or apparatus may differ. We recommend that you ask an authorized Kia dealer.

⚠ WARNING - Towing a trailer

If you don't use the correct equipment and drive improperly, you can lose control when you pull a trailer. For example, if the trailer is too heavy, the brakes may not work well - or even at all. You and your passengers could be seriously or fatally injured. Pull a trailer only if you have followed all the steps in this section.

⚠ WARNING - Weight limits

Before towing, make sure the total trailer weight, gross combination weight, gross vehicle weight, gross axle weight and trailer tongue load are all within the limits.

✻ NOTICE - For Europe

- **The technically permissible maximum load on the rear axle(s) may be exceeded by not more than 15% and the technically permissible maximum laden mass of the vehicle may be exceeded by not more than 10% or 100kg (220.4 lbs), whichever value is lower. In this case, do not exceed 100 km/h (62.1 mph) for vehicle of category M1 or 80 km/h (49.7 mph) for vehicle of category N1.**
- **When a vehicle of category M1 is towing a trailer, the additional load imposed at the trailer coupling device may cause the tire maximum load ratings to be exceeded, but not by more than 15%. In this case, do not exceed 100 km/h (62.1 mph) and increase the tire inflation pressure by at least 0.2 bar.**

⚠ CAUTION

Pulling a trailer improperly can damage your vehicle and result in costly repairs not covered by your warranty. To pull a trailer correctly, follow the advice in this section.

Your vehicle can tow a trailer. To identify what the vehicle trailering capacity is for your vehicle, you should read the information in “Weight of the trailer” that appears later in this section.

Remember that trailering is different than just driving your vehicle by itself. Trailering means changes in handling, durability, and fuel economy. Successful, safe trailering requires correct equipment, and it has to be used properly.

This section contains many time-tested, important trailering tips and safety rules. Many of these are important for your safety and that of your passengers. Please read this section carefully before you pull a trailer.

Load-pulling components such as the engine, transaxle, wheel assemblies, and tires are forced to work harder against the load of the added weight. The engine is required to operate at relatively higher speeds and under greater loads. This additional burden generates extra heat. The trailer also considerably adds wind resistance, increasing pulling requirements.

YN ENG 5.QXP 4/16/2012 10:04 AM Page 53

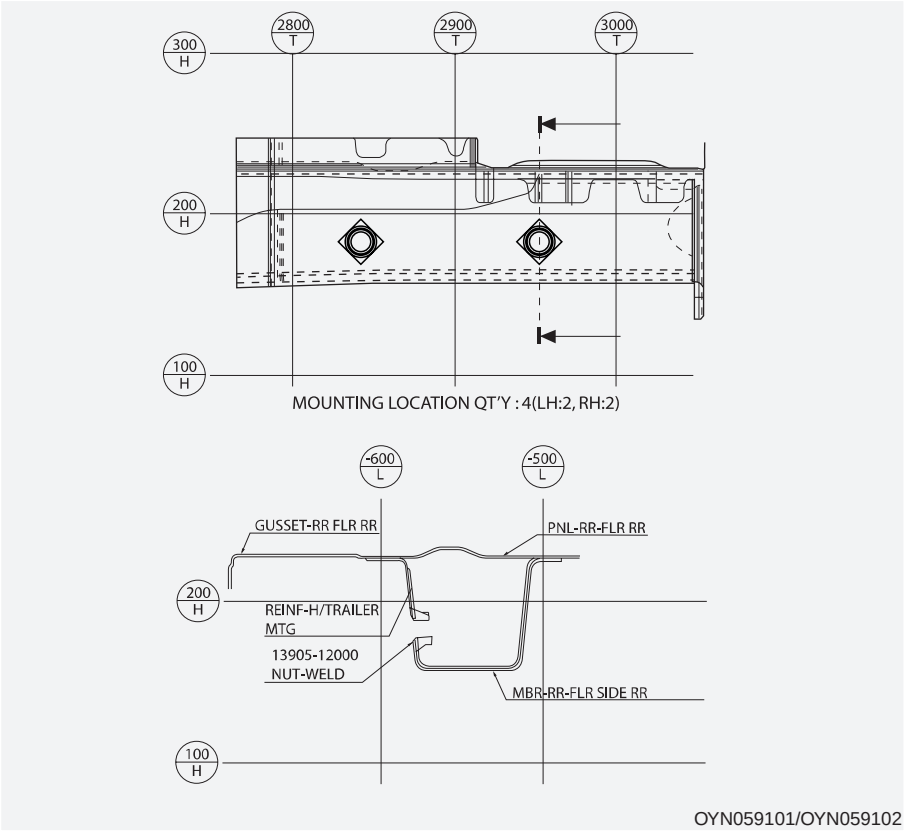

OYN059101/OYN059102

Hitches

It's important to have the correct hitch equipment. Crosswinds, large trucks going by, and rough roads are a few reasons why you'll need the right hitch. Here are some rules to follow:

- Do you have to make any holes in the body of your vehicle when you install a trailer hitch? If you do, then be sure to seal the holes later when you remove the hitch.

  If you don't seal them, deadly carbon monoxide (CO) from your exhaust can get into your vehicle, as well as dirt and water.
- The bumpers on your vehicle are not intended for hitches. Do not attach rental hitches or other bumper-type hitches. Use only a frame-mounted hitch that does not attach to the bumper.
- We recommend that you contact an authorized Kia dealer for the Kia trailer hitch accessory.

YN ENG 5.QXP 4/16/2012 10:04 AM Page 54

Safety chains

You should always attach chains between your vehicle and your trailer. Cross the safety chains under the tongue of the trailer so that the tongue will not drop to the road if it becomes separated from the hitch.

Instructions about safety chains may be provided by the hitch manufacturer or by the trailer manufacturer. Follow the manufacturer's recommendation for attaching safety chains. Always leave just enough slack so you can turn with your trailer. And, never allow safety chains drag on the ground.

Trailer brakes

If your trailer is equipped with a braking system, make sure it conforms to your country's regulations and that it is properly installed and operating correctly.

If your trailer weighs more than the maximum trailer weight without trailer brakes loaded, then it needs its own brakes and they must be adequate. Be sure to read and follow the instructions for the trailer brakes so you'll be able to install, adjust and maintain them properly.

- Don't tap into your vehicle's brake system.

⚠ WARNING - Trailer brakes

Do not use a trailer with its own brakes unless you are absolutely certain that you have properly set up the brake system. This is not a task for amateurs. Use an experienced, competent trailer shop for this work.

Driving with a trailer

Towing a trailer requires a certain amount of experience. Before setting out for the open road, you must get to know your trailer. Acquaint yourself with the feel of handling and braking with the added weight of the trailer. And always keep in mind that the vehicle you are driving is now a good deal longer and not nearly so responsive as your vehicle is by itself.

Before you start, check the trailer hitch and platform, safety chains, electrical connector(s), lights, tires and mirror adjustment. If the trailer has electric brakes, start your vehicle and trailer moving and then apply the trailer brake controller by hand to be sure the brakes are working. This lets you check your electrical connection at the same time.

During your trip, check occasionally to be sure that the load is secure, and that the lights and trailer brakes are still working.

YN ENG 5.QXP 4/16/2012 10:04 AM Page 55

Following distance

Stay at least twice as far behind the vehicle ahead as you would when driving your vehicle without a trailer. This can help you avoid situations that require heavy braking and sudden turns.

Passing

You'll need more passing distance up ahead when you're towing a trailer. And, because of the increased vehicle length, you'll need to go much farther beyond the passed vehicle before you can return to your lane.

Backing up

Hold the bottom of the steering wheel with one hand. Then, to move the trailer to the left, just move your hand to the left. To move the trailer to the right, move your hand to the right. Always back up slowly and, if possible, have someone guide you.

Making turns

When you're turning with a trailer, make wider turns than normal. Do this so your trailer won't strike soft shoulders, curbs, road signs, trees, or other objects. Avoid jerky or sudden maneuvers. Signal well in advance.

Turn signals when towing a trailer

When you tow a trailer, your vehicle has to have a different turn signal flasher and extra wiring. The green arrows on your instrument panel will flash whenever you signal a turn or lane change. Properly connected, the trailer lights will also flash to alert other drivers you're about to turn, change lanes, or stop.

When towing a trailer, the green arrows on your instrument panel will flash for turns even if the bulbs on the trailer are burned out. Thus, you may think drivers behind you are seeing your signals when, in fact, they are not. It's important to check occasionally to be sure the trailer bulbs are still working. You must also check the lights every time you disconnect and then reconnect the wires.

Do not connect a trailer lighting system directly to your vehicle's lighting system. Use only an approved trailer wiring harness.

We recommend that you contact an authorized Kia dealer to assist you in installing the wiring harness.

⚠ WARNING

Failure to use an approved trailer wiring harness could result in damage to the vehicle electrical system and/or personal injury.

Driving on grades

Reduce speed and shift to a lower gear before you start down a long or steep downgrade. If you don't shift down, you might have to use your brakes so much that they would get hot and no longer operate efficiently.

On a long uphill grade, shift down and reduce your speed to around 70 km/h (45 mph) to reduce the possibility of engine and transaxle overheating.

If your trailer weighs more than the maximum trailer weight without trailer brakes and you have an automatic transaxle, you should drive in D (Drive) when towing a trailer.

Operating your vehicle in D (Drive) when towing a trailer will minimize heat build up and extend the life of your transaxle.

YN ENG 5.QXP 4/16/2012 10:04 AM Page 56

⚠ CAUTION

- ***When towing a trailer on steep grades (in excess of 6%) pay close attention to the engine coolant temperature gauge to ensure the engine does not overheat. If the coolant temperature red warning light illuminates, pull over and stop as soon as it is safe to do so, and allow the engine to idle until it cools down. You may proceed once the engine has cooled sufficiently.***
- ***You must decide the driving speed depending on trailer weight and uphill grade to reduce the possibility of engine and transaxle overheating.***

Parking on hills

Generally, if you have a trailer attached to your vehicle, you should not park your vehicle on a hill. People can be seriously or fatally injured, and both your vehicle and the trailer can be damaged if unexpectedly roll down hill.

⚠ WARNING - Parking on a hill

Parking your vehicle on a hill with a trailer attached could cause serious injury or death, should the trailer break loose.

However, if you ever have to park your trailer on a hill, here's how to do it:

1. Pull the vehicle into the parking space. Turn the steering wheel in the direction of the curb (right if headed down hill, left if headed up hill).
2. If the vehicle has a manual transaxle, place the car in neutral. If the vehicle has an automatic transaxle, place the car in P (Park).
3. Set the parking brake and shut off the vehicle.
4. Place chocks under the trailer wheels on the down hill side of the wheels.
5. Start the vehicle, hold the brakes, shift to neutral, release the parking brake and slowly release the brakes until the trailer chocks absorb the load.
6. Reapply the brakes, reapply the parking brake and shift the vehicle to R (Reverse) for manual transaxle or P (Park) for automatic transaxle.
7. Shut off the vehicle and release the vehicle brakes but leave the parking brake set.

⚠ WARNING - Parking brake

It can be dangerous to get out of your vehicle if the parking brake is not firmly set.

If you have left the engine running, the vehicle can move suddenly. You or others could be seriously or fatally injured.

YN ENG 5.QXP 4/16/2012 10:04 AM Page 57

When you are ready to leave after parking on a hill

1. With the manual transaxle in Neutral or automatic transaxle in P (Park), apply your brakes and hold the brake pedal down while you:
   - Start your engine;
   - Shift into gear; and
   - Release the parking brake.
2. Slowly remove your foot from the brake pedal.
3. Drive slowly until the trailer is clear of the chocks.
4. Stop and have someone pick up and store the chocks.

Maintenance when trailer towing

Your vehicle will need service more often when you regularly pull a trailer. Important items to pay particular attention to include engine oil, automatic transaxle fluid, axle lubricant and cooling system fluid. Brake condition is another important item to frequently check. Each item is covered in this manual, and the Index will help you find them quickly. If you're trailering, it's a good idea to review these sections before you start your trip.

Don't forget to also maintain your trailer and hitch. Follow the maintenance schedule that accompanied your trailer and check it periodically. Preferably, conduct the check at the start of each day's driving. Most importantly, all hitch nuts and bolts should be tight.

⚠ CAUTION

- ***Due to higher load during trailer usage, overheating might occur in hot days or during uphill driving. If the coolant gauge indicates over-heating, switch off the A/C and stop the vehicle in a safe area to cool down the engine.***
- ***When towing, check the transaxle fluid more frequently.***
- ***If your vehicle is not equipped with an air conditioner, you should install a condenser fan to improve engine performance when towing a trailer.***

YN ENG 5.QXP 4/16/2012 10:04 AM Page 58

If you do decide to pull a trailer

Here are some important points if you decide to pull a trailer:

- Consider using a sway control. You can ask a hitch dealer about sway control.
- Do not do any towing with your car during its first 2,000 km (1,200 miles) in order to allow the engine to properly break in. Failure to heed this caution may result in serious engine or transaxle damage.
- When towing a trailer, we recommend that you consult an authorized Kia dealer on additional requirements such as a towing kit, etc.
- Always drive your vehicle at a moderate speed (less than 100 km/h / 60 mph). If your vehicle is a commercial vehicle, drive less than 80 km/h.
- On a long uphill grade, do not exceed 70 km/h (45 mph) or the posted towing speed limit, whichever is lower.
- The chart contains important considerations that have to do with weight:

Item \ Engine		Gasoline Engine			Diesel Engine	
		1.4 Engine	1.6 Engine		1.4 Engine	1.6 Engine
			M/T	A/T		
Maximum trailer weight kg (lbs.)	Without brake System	550 (1213)	550 (1213)	550 (1213)	550 (1213)	550 (1213)
	With brake System	1300 (2866)	1300 (2866)	1100 (2425)	1300 (2866)	1300 (2866)
Maximum permissible static vertical load on the coupling device kg (lbs.)		75 (165)				
Recommended distance from rear wheel center to coupling point mm (inch)		768 (30.2)				

M/T : Manual transaxle
A/T : Automatic transaxle

YN ENG 5.QXP 4/16/2012 10:04 AM Page 59

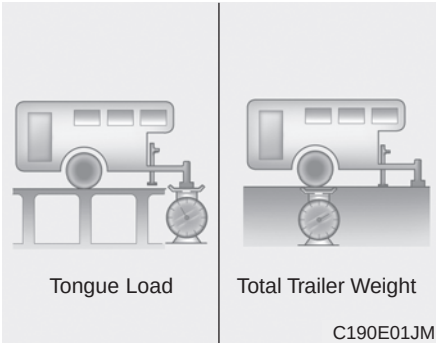

Weight of the trailer

How heavy can a trailer be considered safe? It should never weigh more than the maximum trailer weight with trailer brakes. But even that can be too heavy.

It depends on how you plan to use your trailer. For example, speed, altitude, road grades, outside temperature and how often your vehicle is used to pull a trailer are all important. The ideal trailer weight can also depend on any special equipment that you have on your vehicle.

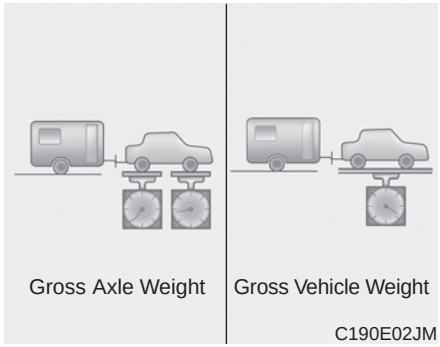

Weight of the trailer tongue

The tongue load of any trailer is an important weight to measure because it affects the total gross vehicle weight (GVW) of your vehicle. This weight includes the curb weight of the vehicle, any cargo you may carry in it, and the people who will be riding in the vehicle. And if you tow a trailer, you must add the tongue load to the GVW because your vehicle will also be carrying that weight.

The trailer tongue should weigh a maximum of 10% of the total loaded trailer weight, within the limits of the maximum trailer tongue load permissible. After you've loaded your trailer, weigh the trailer and then the tongue, separately, to see if the weights are proper. If they aren't, you may be able to correct them simply by moving some items around in the trailer.

⚠ WARNING - Trailer

- **Never load a trailer with more weight in the rear than in the front. The front should be loaded with approximately 60% of the total trailer load; the rear should be loaded with approximately 40% of the total trailer load.**
- **Never exceed the maximum weight limits of the trailer or trailer towing equipment. Improper loading can result in damage to your vehicle and/or personal injury. Check weights and loading at a commercial scale or highway patrol office equipped with scales.**
- **An improperly loaded trailer can cause loss of vehicle control.**

YN ENG 5.QXP 4/16/2012 10:04 AM Page 60

VEHICLE WEIGHT

This section will guide you in the proper loading of your vehicle and/or trailer, to keep your loaded vehicle weight within its design rating capability, with or without a trailer. Properly loading your vehicle will provide maximum return of the vehicle design performance. Before loading your vehicle, familiarize yourself with the following terms for determining your vehicle's weight ratings, with or without a trailer, from the vehicle's specifications and the certification label:

Base curb weight
This is the weight of the vehicle including a full tank of fuel and all standard equipment. It does not include passengers, cargo, or optional equipment.

Vehicle curb weight
This is the weight of your new vehicle when you picked it up from your dealer plus any aftermarket equipment.

Cargo weight
This figure includes all weight added to the Base Curb Weight, including cargo and optional equipment.

GAW (Gross axle weight)
This is the total weight placed on each axle (front and rear) - including vehicle curb weight and all payload.

GAWR (Gross axle weight rating)
This is the maximum allowable weight that can be carried by a single axle (front or rear). These numbers are shown on the certification label.
The total load on each axle must never exceed its GAWR.

GVW (Gross vehicle weight)
This is the Base Curb Weight plus actual Cargo Weight plus passengers.

GVWR (Gross vehicle weight rating)
This is the maximum allowable weight of the fully loaded vehicle (including all options, equipment, passengers and cargo). The GVWR is shown on the certification label located on the driver's (or front passenger's) door sill.

Overloading

⚠ WARNING - Vehicle weight
The gross axle weight rating (GAWR) and the gross vehicle weight rating (GVWR) for your vehicle are on the certification label attached to the driver's (or front passenger's) door. Exceeding these ratings can cause an accident or vehicle damage. You can calculate the weight of your load by weighing the items (and people) before putting them in the vehicle. Be careful not to overload your vehicle.

YN ENG 6.QXP 4/16/2012 10:05 AM Page 1

Road warning / 6-2
In case of an emergency while driving / 6-2
If the engine will not start / 6-3
Emergency starting / 6-4
If the engine overheats / 6-6
If you have a flat tire (with spare tire) / 6-7
If you have a flat tire (with Tire Mobility Kit) / 6-15
Tire Pressure Monitoring System (TPMS) / 6-20
Towing / 6-25

What to do in an emergency

6

YN ENG 6.QXP 4/16/2012 10:05 AM Page 2

ROAD WARNING

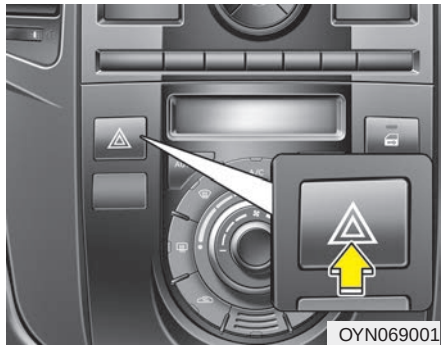

Hazard warning flasher

The hazard warning flasher serves as a warning to other drivers to exercise extreme caution when approaching, overtaking, or passing your vehicle.

It should be used whenever emergency repairs are being made or when the vehicle is stopped near the edge of a roadway.

Depress the flasher switch with the ignition switch in any position. The flasher switch is located in the center console switch panel. All turn signal lights will flash simultaneously.

- The hazard warning flasher operates whether your vehicle is running or not.
- The turn signals do not work when the hazard flasher is on.
- Care must be taken when using the hazard warning flasher while the vehicle is being towed.

IN CASE OF AN EMERGENCY WHILE DRIVING

If the engine stalls at a crossroad or crossing

If the engine stalls at a crossroad or crossing, set the shift lever in the N (Neutral) position and then push the vehicle to a safe place.

If you have a flat tire while driving

If a tire goes flat while you are driving:

1. Take your foot off the accelerator pedal and let the vehicle slow down while driving straight ahead. Do not apply the brakes immediately or attempt to pull off the road as this may cause a loss of control. When the vehicle has slowed down to such a speed that it is safe to do so, brake carefully and pull off the road. Drive off the road as far as possible and park on a firm level ground. If you are on a divided highway, do not park in the median area between the two traffic lanes.

YN ENG 6.QXP 4/16/2012 10:05 AM Page 3

2. When the vehicle is stopped, turn on your emergency hazard flashers, set the parking brake and put the transaxle in P (automatic transaxle) or reverse (manual transaxle).
3. Have all passengers get out of the vehicle. Be sure they all get out on the side of the vehicle that is away from traffic.
4. When changing a flat tire, follow the instruction provided later in this section.

If engine stalls while driving

1. Reduce your speed gradually, keeping a straight line. Move cautiously off the road to a safe place.
2. Turn on your emergency flashers.
3. Try to start the engine again. If your vehicle will not start, we recommend that you contact an authorized Kia dealer.

IF THE ENGINE WILL NOT START

If engine doesn't turn over or turns over slowly

1. If your vehicle has an automatic transaxle, be sure the shift lever is in N (Neutral) or P (Park) and the emergency brake is set.
2. Check the battery connections to be sure they are clean and tight.
3. Turn on the interior light. If the light dims or goes out when you operate the starter, the battery is discharged.
4. Check the starter connections to be sure they are securely tightened.
5. Do not push or pull the vehicle to start it. See instructions for "Jump starting".

⚠ WARNING

If the engine will not start, do not push or pull the vehicle to start it. This could result in a collision or cause other damage. In addition, push or pull starting may cause the catalytic converter to be overloaded and create a fire hazard.

If engine turns over normally but does not start

1. Check the fuel level.
2. With the ignition switch in the LOCK position, check all connectors at the ignition coils and spark plugs. Reconnect any that may be disconnected or loose.
3. Check the fuel line in the engine compartment.
4. If the engine still does not start, we recommend that you call an authorized Kia dealer.

YN ENG 6.QXP 4/16/2012 10:05 AM Page 4

EMERGENCY STARTING

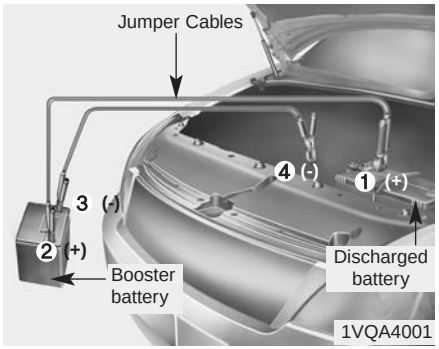

Connect cables in numerical order and disconnect in reverse order.

Jump starting

Jump starting can be dangerous if done incorrectly. Therefore, to avoid harm to yourself or damage to your vehicle or battery, follow the jump starting procedures. If in doubt, we strongly recommend that you have a competent technician or towing service jump start your vehicle.

⚠ CAUTION

Use only a 12-volt jumper system. You can damage a 12-volt starting motor, ignition system, and other electrical parts beyond repair by use of a 24-volt power supply (either two 12-volt batteries in series or a 24-volt motor generator set).

⚠ WARNING - Battery

Never attempt to check the electrolyte level of the battery as this may cause the battery to rupture or explode causing serious injury.

⚠ WARNING - Battery

- **Keep all flames or sparks away from the battery. The battery produces hydrogen gas which may explode if exposed to flame or sparks.**
- **Do not attempt to jump start the vehicle if the discharged battery is frozen or if the electrolyte level is low; the battery may rupture or explode.**

Jump starting procedure

⚠ CAUTION - AGM battery (if equipped)

- ***Absorbent Glass Matt (AGM) batteries are maintenance-free and we recommend that system be serviced by an authorized Kia dealer. For charging your AGM battery, use only fully automatic battery chargers that are specially developed for AGM batteries.***
- ***When replacing the AGM battery, we recommend that the AGM battery be replaced by an authorized Kia dealer.***

(Continued)

YN ENG 6.QXP 4/16/2012 10:05 AM Page 5

(Continued)

- ***If the AGM battery is reconnected or replaced, ISG function will not operate immediately.***
  If you want to use the ISG function, the battery sensor needs to be calibrated for approximately 4 hours with the ignition off.

1. Make sure the booster battery is 12-volt and that its negative terminal is grounded.
2. If the booster battery is in another vehicle, do not allow the vehicles come in contact.
3. Turn off all unnecessary electrical loads.
4. Connect the jumper cables in the exact sequence shown in the illustration. First connect one end of a jumper cable to the positive terminal of the discharged battery (1), then connect the other end to the positive terminal on the booster battery (2).
5. Proceed to connect one end of the other jumper cable to the negative terminal of the booster battery (3), then the other end to a solid, stationary, metallic point (for example, the engine lifting bracket) away from the battery (4). Do not connect it to or near any part that moves when the engine is cranked.
   Do not allow the jumper cables to contact anything except the correct battery terminals or the correct ground. Do not lean over the battery when making connections.

⚠ CAUTION - Battery cables

Do not connect the jumper cable from the negative terminal of the booster battery to the negative terminal of the discharged battery. This can cause the discharged battery to overheat and crack, releasing battery acid.

6. Start the engine of the vehicle with the booster battery and let it run at 2,000 rpm, then start the engine of the vehicle with the discharged battery.

If the cause of your battery discharging is not apparent, we recommend that the system be checked by an authorized Kia dealer.

Push-starting

Your manual transaxle-equipped vehicle should not be push-started because it might damage the emission control system.

Vehicles equipped with automatic transaxle cannot be push-started.

Follow the directions in this section for jump-starting.

⚠ WARNING

Never tow a vehicle to start it because the sudden surge forward when the engine starts could cause a collision with the tow vehicle.

YN ENG 6.QXP 4/16/2012 10:05 AM Page 6

IF THE ENGINE OVERHEATS

If your temperature gauge indicates overheating, you will experience a loss of power, or hear loud pinging or knocking, the engine is probably too hot. If this happens, you should:

1. Pull off the road and stop as soon as it is safe to do so.
2. Place the shift lever in P (automatic transaxle) or Neutral (manual transaxle) and set the parking brake. If the air conditioning is on, turn it off.
3. If engine coolant is running out under the vehicle or steam is coming out from the hood, stop the engine. Do not open the hood until the coolant has stopped running or the steaming has stopped. If there is no visible loss of engine coolant and no steam, leave the engine running and check to be sure the engine cooling fan is operating. If the fan is not running, turn the engine off.
4. Check to see if the water pump drive belt is missing. If it is not missing, check to see that it is tight. If the drive belt seems to be satisfactory, check for coolant leaking from the radiator, hoses or under the vehicle. (If the air conditioning had been in use, it is normal for cold water to be draining from it when you stop).

⚠ WARNING

While the engine is running, keep hair, hands and clothing away from moving parts such as the fan and drive belts to prevent injury.

5. If the water pump drive belt is broken or engine coolant is leaking out, stop the engine immediately and we recommend that you call an authorized Kia dealer.

⚠ WARNING

Do not remove the radiator cap when the engine is hot. This can allow coolant to be blown out of the opening and cause serious burns.

6. If you cannot find the cause of overheating, wait until the engine temperature has returned to normal. Then, if coolant has been lost, carefully add coolant to the reservoir to bring the fluid level in the reservoir up to the halfway mark.
7. Proceed with caution, keeping alert for further signs of overheating. If overheating happens again, we recommend that you call an authorized Kia dealer.

⚠ CAUTION

Serious loss of coolant indicates there is a leak in the cooling system and we recommend that the system be checked by an authorized Kia dealer.

YN ENG 6.QXP 4/16/2012 10:05 AM Page 7

IF YOU HAVE A FLAT TIRE (WITH SPARE TIRE, IF EQUIPPED)

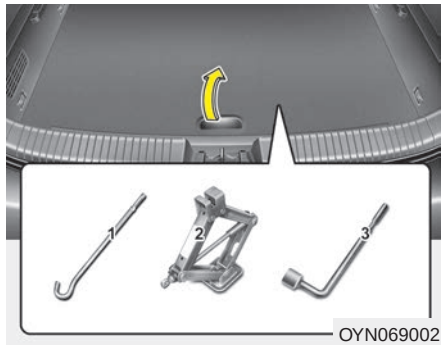

Jack and tools

The jack, jack handle, wheel lug nut wrench are stored in the luggage compartment.

Pull up the luggage box cover to reach this equipment.

(1) Jack handle

(2) Jack

(3) Wheel lug nut wrench

Jacking instructions

The jack is provided for emergency tire changing only.

To prevent the jack from “rattling” while the vehicle is in motion, store it properly.

Follow jacking instructions to reduce the possibility of personal injury.

⚠ WARNING - Changing tires

- **Never attempt vehicle repairs in the traffic lanes of a public road or highway.**
- **Always move the vehicle completely off the road and onto the shoulder before trying to change a tire. The jack should be used on firm level ground. If you cannot find a firm level place off the road, call a towing service company for assistance.**
- **Be sure to use the correct front and rear jacking positions on the vehicle; never use the bumpers or any other part of the vehicle for jacking support.**

(Continued)

YN ENG 6.QXP 4/16/2012 10:05 AM Page 8

(Continued)

- **The vehicle can easily roll off the jack causing serious injury or death.**
- **Do not get under a vehicle that is supported by a jack.**
- **Do not start or run the engine while the vehicle is on the jack.**
- **Do not allow anyone remain in the vehicle while it is on the jack.**
- **Make sure any children present are in a secure place away from the road and from the vehicle to be raised with the jack.**

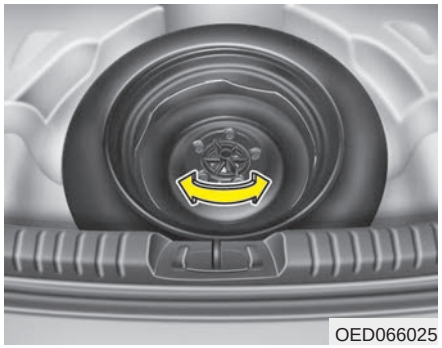

OED066025

Removing and storing the spare tire

Turn the tire hold-down wing bolt counterclockwise.

Store the tire in the reverse order of removal.

To prevent the spare tire and tools from “rattling” while the vehicle is in motion, store them properly.



OED066033

Changing tires

1. Park on a level surface and apply the parking brake firmly.
2. Shift the shift lever into R (Reverse) with manual transaxle or P (Park) with automatic transaxle.
3. Activate the hazard warning flasher.

YN ENG 6.QXP 4/16/2012 10:05 AM Page 9



OYN069019

4. Remove the wheel lug nut wrench, jack, jack handle, and spare tire from the vehicle.
5. Block both the front and rear of wheel that is diagonally opposite the jack position.

⚠ WARNING - Changing a tire

- **To prevent vehicle movement while changing a tire, always set the parking brake fully, and always block the wheel diagonally opposite the wheel being changed.**
- **We recommend that the wheels of the vehicle be chocked, and that no person remain in a vehicle that is being jacked.**

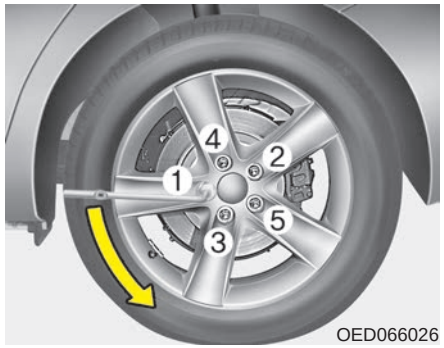

OED066026

6. Loosen the wheel lug nuts counterclockwise one turn each, but do not remove any nut until the tire has been raised off the ground.

YN ENG 6.QXP 4/16/2012 10:06 AM Page 10

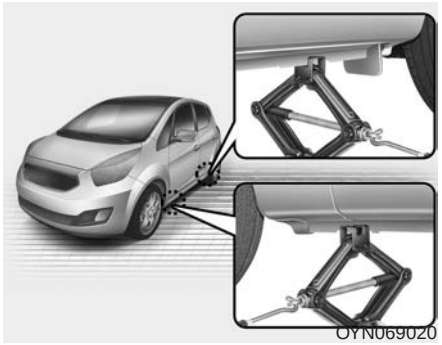
OYN069020

7. Place the jack at the front or rear jacking position closest to the tire you are changing. Place the jack at the designated locations under the frame. The jacking positions are plates welded to the frame with two tabs and a raised dot to index with the jack.

⚠ WARNING - Jack location
To reduce the possibility of injury, be sure to use only the jack provided with the vehicle and in the correct jack position; never use any other part of the vehicle for jack support.

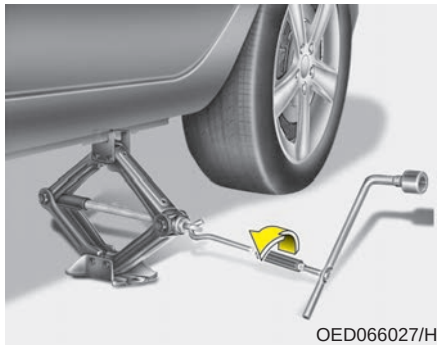
OED066027/H

8. Insert the jack handle into the jack and turn it clockwise, raising the vehicle until the tire just clears the ground. This measurement is approximately 30 mm (1.2 in). Before removing the wheel lug nuts, make sure the vehicle is stable and that there is no chance for movement or slippage.

9. Loosen the wheel nuts and remove them with your fingers. Slide the wheel off the studs and lay it flat so it cannot roll away. To put the wheel on the hub, pick up the spare tire, line up the holes with the studs and slide the wheel onto them. If this is difficult, tip the wheel slightly and get the top hole in the wheel lined up with the top stud. Then jiggle the wheel back and forth until the wheel can be slid over the other studs.

YN ENG 6.QXP 4/16/2012 10:06 AM Page 11

⚠ WARNING

Wheels and wheel covers may have sharp edges. Handle them carefully to avoid possible severe injury. Before putting the wheel into place, be sure that there is nothing on the hub or wheel (such as mud, tar, gravel, etc.) that interferes with the wheel from fitting solidly against the hub.

If there is, remove it. If there is not good contact on the mounting surface between the wheel and hub, the wheel nuts could come loose and cause the loss of a wheel. Loss of a wheel may result in loss of control of the vehicle. This may cause serious injury or death.

10. To reinstall the wheel, hold it on the studs, put the wheel nuts on the studs and tighten them finger tight. Jiggle the tire to be sure it is completely seated, then tighten the nuts as much as possible with your fingers again.
11. Lower the vehicle to the ground by turning the wheel nut wrench counterclockwise.

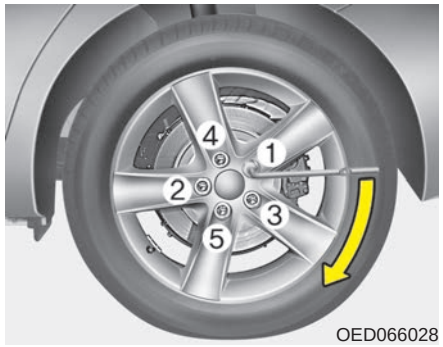

OED066028

Then position the wrench as shown in the drawing and tighten the wheel nuts. Be sure the socket is seated completely over the nut. Do not stand on the wrench handle or use an extension pipe over the wrench handle. Go around the wheel tightening every other nut until they are all tight. Then double-check each nut for tightness. After changing wheels, we recommend that the system be checked by an authorized Kia dealer.

Wheel nut tightening torque:

Steel wheel & aluminum alloy wheel:
9~11 kg·m (65~79 lb·ft)

YN ENG 6.QXP 4/16/2012 10:06 AM Page 12

If you have a tire gauge, remove the valve cap and check the air pressure. If the pressure is lower than recommended, drive slowly to the nearest service station and inflate to the correct pressure. If it is too high, adjust it until it is correct. Always reinstall the valve cap after checking or adjusting tire pressure. If the cap is not replaced, air may leak from the tire. If you lose a valve cap, buy another and install it as soon as possible.

After you have changed wheels, always secure the flat tire in its place and return the jack and tools to their proper storage locations.

⚠ CAUTION

Your vehicle has metric threads on the wheel studs and nuts. Make certain during wheel removal that the same nuts that were removed are reinstalled - or, if replaced, that nuts with metric threads and the same chamfer configuration are used. Installation of a non-metric thread nut on a metric stud or vice-versa will not secure the wheel to the hub properly and will damage the stud so that it must be replaced.

Note that most lug nuts do not have metric threads. Be sure to use extreme care in checking for thread style before installing aftermarket lug nuts or wheels. If in doubt, we recommend that you consult an authorized Kia dealer.

⚠ WARNING - Wheel studs

If the studs are damaged, they may lose their ability to retain the wheel. This could lead to the loss of the wheel and a collision resulting in serious injuries.

To prevent the jack, jack handle, wheel lug nut wrench and spare tire from rattling while the vehicle is in motion, store them properly.

⚠ WARNING - Inadequate spare tire pressure

Check the inflation pressures as soon as possible after installing the spare tire. Adjust it to the specified pressure, if necessary. Refer to “Tires and wheels” in section 8.

YN ENG 6.QXP 4/16/2012 10:06 AM Page 13

Important - use of compact spare tire (if equipped)

Your vehicle is equipped with a compact spare tire. This compact spare tire takes up less space than a regular-size tire. This tire is smaller than a conventional tire and is designed for temporary use only.

⚠ CAUTION

- ***You should drive carefully when the compact spare is in use. The compact spare should be replaced by the proper conventional tire and rim at the first opportunity.***
- ***The operation of this vehicle is not recommended with more than one compact spare tire in use at the same time.***

⚠ WARNING

The compact spare tire is for emergency use only. Do not operate your vehicle on this compact spare at the speed over 80 km/h (50 mph). The original tire should be repaired or replaced as soon as possible to avoid failure of the spare possibly leading to personal injury or death.

The compact spare should be inflated to 420 kPa (60 psi).

✻ NOTICE

Check the inflation pressure after installing the spare tire. Adjust it to the specified pressure, as necessary.

When using a compact spare tire, observe the following precautions:

- Under no circumstances should you exceed 80 km/h (50 mph); a higher speed could damage the tire.
- Ensure that you drive slowly enough to avoid all hazards. Any road hazard, such as a pothole or debris, could seriously damage the compact spare.
- Any continuous road use of this tire could result in tire failure, loss of vehicle control, and possible personal injury.
- Do not exceed the vehicle's maximum load rating or the load-carrying capacity shown on the sidewall of the compact spare tire.
- Avoid driving over obstacles. The compact spare tire diameter is smaller than the diameter of a conventional tire and reduces the ground clearance approximately 25 mm (1 inch), which could result in damage to the vehicle.

YN ENG 6.QXP 4/16/2012 10:06 AM Page 14

- Do not take this vehicle through an automatic car wash while the compact spare tire is installed.
- Do not use tire chains on the compact spare tire. Because of the smaller size, a tire chain will not fit properly. This could damage the vehicle and result in loss of the chain.
- The compact spare tire should not be installed on the front axle if the vehicle must be driven in snow or on ice.
- Do not use the compact spare tire on any other vehicle because this tire has been designed especially for your vehicle.
- The compact spare tire's tread life is shorter than a regular tire. Inspect your compact spare tire regularly and replace worn compact spare tires with the same size and design, mounted on the same wheel.
- The compact spare tire should not be used on any other wheels, nor should standard tires, snow tires, wheel covers or trim rings be used with the compact spare wheel. If such use is attempted, damage to these items or other car components may occur.
- Do not use more than one compact spare tire at a time.
- Do not tow a trailer while the compact spare tire is installed.

YN ENG 6.QXP 4/16/2012 10:06 AM Page 15

IF YOU HAVE A FLAT TIRE (WITH TIRE MOBILITY KIT, IF EQUIPPED)

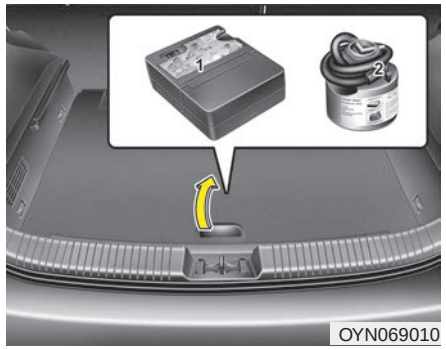

Please read the instructions before using the Tire Mobility Kit.

(1) Compressor

(2) Sealant bottle



Introduction

With the Tire Mobility Kit you stay mobile even after experiencing a tire puncture.

The system of compressor and sealing compound effectively and comfortably seals most punctures in a passenger car tire caused by nails or similar objects and reinflates the tire.

After you ensured that the tire is properly sealed you can drive cautiously on the tire (up to 200 km (120 miles)) at a max. speed of 80 km/h (50 mph) in order to reach a vehicle or tire dealer to have the tire replaced.

It is possible that some tires, especially with larger punctures or damage to the sidewall, cannot be sealed completely.

Air pressure loss in the tire may adversely affect tire performance.

For this reason, you should avoid abrupt steering or other driving maneuvers, especially if the vehicle is heavily loaded or if a trailer is in use.

The Tire Mobility Kit is not designed or intended as a permanent tire repair method and is to be used for one tire only.

This instruction shows you step by step how to temporarily seal the puncture simply and reliably.

Read the section "Notes on the safe use of the Tire Mobility Kit".

⚠ WARNING

Do not use the TireMobilityKit if a tire is severely damaged by driving run flat or with insufficient air pressure.

Only punctured areas located within the tread region of the tire can be sealed using the TireMobilityKit.

Damage to the sidewall must not be repaired due to safety reasons.

YN ENG 6.QXP 4/16/2012 10:06 AM Page 16

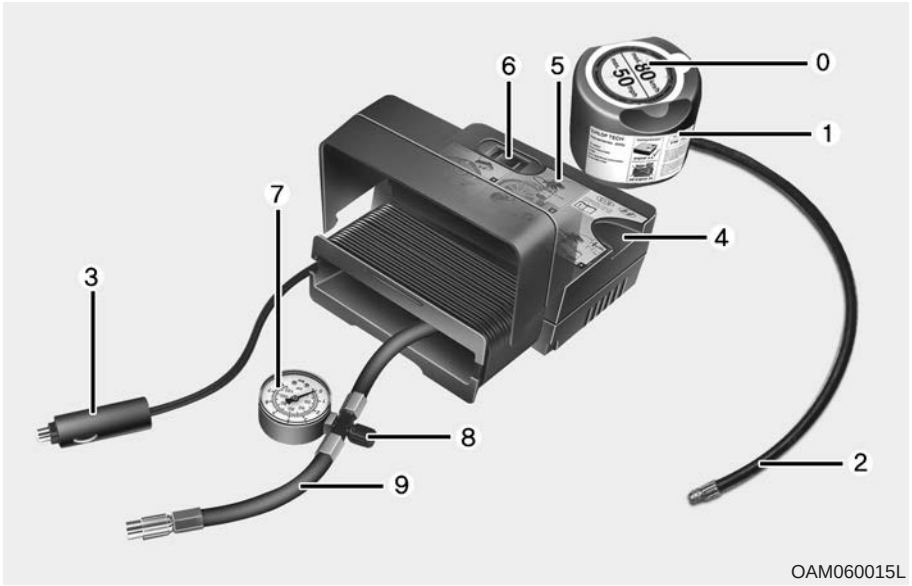

OAM060015L

Components of the Tire Mobility Kit

0. Speed restriction label
1. Sealant bottle and label with speed restriction
2. Filling hose from sealant bottle to wheel
3. Connectors and cable for the power outlet direct connection
4. Holder for the sealant bottle
5. Compressor
6. On/off switch
7. Pressure gauge for displaying the tire inflation pressure
8. Button for reducing tire inflation pressure
9. Hose to connect compressor and sealant bottle or compressor and wheel

Connectors, cable and connection hose are stored in the compressor housing.

⚠ WARNING

Before using the Tire Mobility Kit, follow the instructions on the sealant bottle.

Remove the label with the speed restriction from the sealant bottle and apply it to the steering wheel.

Please note the expiry date on the sealant bottle.

YN ENG 6.QXP 4/16/2012 10:06 AM Page 17

Using the Tire Mobility Kit

1. Filling the sealant

Strictly follow the specified sequence, otherwise the sealant may escape under high pressure.

1) Shake the sealant bottle.
2) Screw connection hose 9 onto the connector of the sealant bottle.
3) Ensure that button 8 on the compressor is not pressed.
4) Unscrew the valve cap from the valve of the defective wheel and screw filling hose 2 of the sealant bottle onto the valve.
5) Insert the sealant bottle into the housing of the compressor so that the bottle is upright.


OYN069018

6) Ensure that the compressor is switched off, position 0.
7) Connect between compressor and the vehicle power outlet using the cable and connectors.
8) With the ignition switched on:

Switch on the compressor and let it run for approximately 3 minutes to fill the sealant. The inflation pressure of the tire after filling is unimportant.

9) Switch off the compressor.
10) Detach the hoses from the sealant bottle connector and from the tire valve.

Return the Tire Mobility Kit to its storage location in the vehicle.

⚠ WARNING

Carbon monoxide poisoning and suffocation is possible if the engine is left running in a poorly ventilated or unventilated location (such as inside a building).

YN ENG 6.QXP 4/16/2012 10:06 AM Page 18

Distributing the sealant

Immediately drive approximately 3 km (2 miles) to evenly distribute the sealant in the tire.

⚠ CAUTION

Do not exceed a speed of 80 km/h (50 mph). If possible, do not fall below a speed of 20 km/h (12 mph).

While driving, if you experience any unusual vibration, ride disturbance or noise, reduce your speed and drive with caution until you can safely pull off of the side of the road.

Call for road side service or towing.

Producing the tire inflation pressure

1) After driving approximately 3 km (2 miles), stop at a suitable location.
2) Connect connection hose 9 of the compressor directly to the tire valve.
3) Connect between compressor and the vehicle power outlet using the cable and connectors.
4) Adjust the tire inflation pressure to 220 kPa (32 psi). With the ignition switched on, proceed as follows.

- **To increase the inflation pressure:** Switch on the compressor, position I. To check the current inflation pressure setting, briefly switch off the compressor.

⚠ WARNING

Do not let the compressor run for more than 10 minutes, otherwise the device will overheat and may be damaged.

- **To reduce the inflation pressure:** Press the button 8 on the compressor.

⚠ CAUTION

If the inflation pressure is not maintained, drive the vehicle a second time, refer to Distributing the sealant. Then repeat steps 1 to 4.

Use of the Tire Mobility Kit may be ineffectual for tire damage larger than approximately 6 mm (0.24 in).

We recommend that you contact the nearest Kia A/S center, or a workshop that works according to Kia repair procedures with correspondingly trained personnel if the tire cannot be made roadworthy with the Tire Mobility Kit.

⚠ WARNING

The tire inflation pressure must be at least 220 kPa (32 psi). If it is not, do not continue driving. Call for road side service or towing.

YN ENG 6.QXP 4/16/2012 10:06 AM Page 19

Notes on the safe use of the Tire Mobility Kit

- Park your car at the side of the road so that you can work with the Tire Mobility Kit away from moving traffic. Place your warning triangle in a prominent place to make passing vehicles aware of your location.
- To be sure your vehicle won't move, even when you're on fairly level ground, always set your parking brake.
- Only use the Tire Mobility Kit for sealing/inflation passenger car tires. Do not use on motorcycles, bicycles or any other type of tires.
- Do not remove any foreign objects-such as nails or screws -that have penetrated the tire.
- Before using the Tire Mobility Kit, read the precautionary advice printed on the sealant bottle!
- Provided the car is outdoors, leave the engine running. Otherwise operating the compressor may eventually drain the car battery.
- Never leave the Tire Mobility Kit unattended while it is being used.
- Do not leave the compressor running for more than 10 min. at a time or it may overheat.
- Do not use the Tire Mobility Kit if the ambient temperature is below -30°C (-22°F).
- Do not use the sealing compound after its expiration date which can be found on the label of the bottle.
- Keep away from children.

Technical Data

System voltage: DC 12 V
Working voltage: DC 10 - 15 V
Amperage rating: max. 15 A
Suitable for use at temperatures:
-30 ~ +70°C (-22 ~ +158°F)
Max. working pressure:
6 bar (87 psi)
Size
Compressor: 170 x 150 x 60 mm
(6.7 x 5.9 x 2.4 in.)
Sealant bottle: 85 x 77 ø mm
(3.3 x 3.0 ø in.)
Compressor weight:
0.8 kg (1.8 lbs)
Sealant volume:
200 ml (12.2 cu. in.)

❉ Sealing compound and spare parts can be obtained and replaced at an authorized vehicle or tire dealer. Empty sealing compound bottles may be disposed of at home. Liquid residue from the sealing compound should be disposed of by your vehicle or tire dealer or in accordance with local waste disposal regulations.

YN ENG 6.QXP 4/16/2012 10:06 AM Page 20

TIRE PRESSURE MONITORING SYSTEM (TPMS) (IF EQUIPPED)



(1) Low tire pressure telltale / TPMS malfunction indicator

(2) Low tire pressure position telltale

Each tire, including the spare (if provided), should be checked monthly when cold and inflated to the inflation pressure recommended by the vehicle manufacturer on the vehicle placard or tire inflation pressure label. (If your vehicle has tires of a different size than the size indicated on the vehicle placard or tire inflation pressure label, you should determine the proper tire inflation pressure for those tires.)

As an added safety feature, your vehicle has been equipped with a tire pressure monitoring system (TPMS) that illuminates a low tire pressure telltale when one or more of your tires is significantly under-inflated. Accordingly, when the low tire pressure telltale illuminates, you should stop and check your tires as soon as possible, and inflate them to the proper pressure. Driving on a significantly under-inflated tire causes the tire to overheat and can lead to tire failure. Under-inflation also reduces fuel efficiency and tire tread life, and may affect the vehicle's handling and stopping ability.

Please note that the TPMS is not a substitute for proper tire maintenance, and it is the driver's responsibility to maintain correct tire pressure, even if under-inflation has not reached the level to trigger illumination of the TPMS low tire pressure telltale.

Your vehicle has also been equipped with a TPMS malfunction indicator to indicate when the system is not operating properly. The TPMS malfunction indicator is combined with the low tire pressure telltale. When the system detects a malfunction, the telltale will flash for approximately one minute and then remain continuously illuminated. This sequence will continue upon subsequent vehicle start-ups as long as the malfunction exists. When the malfunction indicator is illuminated, the system may not be able to detect or signal low tire pressure as intended. TPMS malfunctions may occur for a variety of reasons, including the installation of replacement or alternate tires or wheels on the vehicle that prevent the TPMS from functioning properly. Always check the TPMS malfunction telltale after replacing one or more tires or wheels on your vehicle to ensure that the replacement or alternate tires and wheels allow the TPMS to continue to function properly.

YN ENG 6.QXP 4/16/2012 10:06 AM Page 21

✻ NOTICE

If the TPMS, Low Tire Pressure and Position indicators do not illuminate for 3 seconds when the ignition switch is turned to the ON position or engine is running, or if they remain illuminated after coming on for approximately 3 seconds, we recommend that you contact an authorized Kia dealer.



Low tire pressure telltale



Low tire pressure position telltale

When the tire pressure monitoring system warning indicators are illuminated, one or more of your tires is significantly under-inflated. The low tire pressure position telltale light will indicate which tire is significantly under-inflated by illuminating the corresponding position light.

If either telltale illuminates, immediately reduce your speed, avoid hard cornering and anticipate increased stopping distances. You should stop and check your tires as soon as possible. Inflate the tires to the proper pressure as indicated on the vehicle's placard or tire inflation pressure label located on the driver's side center pillar outer panel. If you cannot reach a service station or if the tire cannot hold the newly added air, replace the low pressure tire with the spare tire.

Then the TPMS malfunction indicator may turn on and the Low Tire Pressure and Position telltales will remain on after restarting and about 20 minutes of continuous driving before you have the low pressure tire repaired and replaced on the vehicle.

⚠ CAUTION

In winter or cold weather, the low tire pressure telltale may be illuminated if the tire pressure was adjusted to the recommended tire inflation pressure in warm weather. It does not mean your TPMS is malfunctioning because the decreased temperature leads to a proportional lowering of tire pressure.

When you drive your vehicle from a warm area to a cold area or from a cold area to a warm area, or the outside temperature is greatly higher or lower, you should check the tire inflation pressure and adjust the tires to the recommended tire inflation pressure.

YN ENG 6.QXP 4/16/2012 10:06 AM Page 22

⚠ WARNING - Low pressure damage

Significantly low tire pressure makes the vehicle unstable and can contribute to loss of vehicle control and increased braking distances.

Continued driving on low pressure tires can cause the tires to overheat and fail.

TPMS (Tire Pressure Monitoring System) malfunction indicator

The low tire pressure telltale will illuminate after it blinks for approximately one minute when there is a problem with the Tire Pressure Monitoring System. If the system is able to correctly detect an underinflation warning at the same time as system failure then it will illuminate both the TPMS malfunction and low tire pressure position telltales e.g. if Front Left sensor fails, the TPMS malfunction indicator illuminates, but if the Front Right, Rear Left, or Rear Right tire is under-inflated, the low tire pressure position telltales may illuminate together with the TPMS malfunction indicator.

We recommend that the system be checked by an authorized Kia dealer.

⚠ CAUTION

- ***The TPMS malfunction indicator may be illuminated if the vehicle is moving around electric power supply cables or radios transmitter such as at police stations, government and public offices, broadcasting stations, military installations, airports, or transmitting towers, etc. This can interfere with normal operation of the Tire Pressure Monitoring System (TPMS).***
- ***The TPMS malfunction indicator may be illuminated if snow chains are used or some separate electronic devices such as notebook computer, mobile charger, remote starter or navigation etc., are used in the vehicle. This can interfere with normal operation of the Tire Pressure Monitoring System (TPMS).***

YN ENG 6.QXP 4/16/2012 10:06 AM Page 23

Changing a tire with TPMS

If you have a flat tire, the Low Tire Pressure and Position telltales will come on. We recommend that the system be checked by an authorized Kia dealer.

⚠ CAUTION

We recommend that you use a puncture-repairing agent approved by Kia to repair and/or inflate a low pressure tire. The tire sealant not approved by Kia may damage the tire pressure sensor.

The sealant on the tire pressure sensor and wheel shall be eliminated when you replace the tire with a new one.

Each wheel is equipped with a tire pressure sensor mounted inside the tire behind the valve stem. You must use TPMS specific wheels. It is recommended that you have your tires serviced by an authorized Kia dealer.

Even if you replace the low pressure tire with the spare tire, the Low Tire Pressure and Position telltales will remain on until the low pressure tire is repaired and placed on the vehicle.

After you replace the low pressure tire with the spare tire, the TPMS malfunction indicator may illuminate after a few minutes because the TPMS sensor is not mounted on the spare wheel.

Once the low pressure tire is reinflated to the recommended pressure and installed on the vehicle or the TPMS sensor mounted on the replaced spare wheel is initiated by recommended authorized Kia dealer, the TPMS malfunction indicator and the low tire pressure and position telltales will extinguish within a few minutes of driving.

If the indicators are not extinguished after a few minutes of driving, we recommend that the system be checked by an authorized Kia dealer.

⚠ CAUTION

If a original mounted tire is replaced with the spare tire, the TPMS sensor on the replaced spare wheel should be initiated and the TPMS sensor on the original mounted wheel should be deactivated. If the TPMS sensor on the original mounted wheel located in the spare tire carrier still activates, the tire pressure monitoring system may not operate properly. We recommend that the system be serviced by an authorized Kia dealer.

YN ENG 6.QXP 4/16/2012 10:06 AM Page 24

You may not be able identify a low tire by simply looking at it. Always use a good quality tire pressure gauge to measure the tire's inflation pressure. Please note that a tire that is hot (from being driven) will have a higher pressure measurement than a tire that is cold (from sitting stationary for at least 3 hours and driven less than 1 mile (1.6 km) during that 3 hour period).

Allow the tire to cool before measuring the inflation pressure. Always be sure the tire is cold before inflating to the recommended pressure.

A cold tire means the vehicle has been sitting for 3 hours and driven for less than 1 mile (1.6 km) in that 3 hour period.

⚠ CAUTION

We recommend to use the Tire Mobility Kit approved by Kia if your vehicle is equipped with a Tire Pressure Monitoring System. The liquid sealant can damage the tire pressure sensors.

⚠ WARNING - TPMS

- **The TPMS cannot alert you to severe and sudden tire damage caused by external factors such as nails or road debris.**
- **If you feel any vehicle instability, immediately take your foot off the accelerator, apply the brakes gradually and with light force, and slowly move to a safe position off the road.**

⚠ WARNING - Protecting TPMS

Tampering with, modifying, or disabling the Tire Pressure Monitoring System (TPMS) components may interfere with the system's ability to warn the driver of low tire pressure conditions and/or TPMS malfunctions. Tampering with, modifying, or disabling the Tire Pressure Monitoring System (TPMS) components may void the warranty for that portion of the vehicle.

YN ENG 6.QXP 4/16/2012 10:06 AM Page 25

TOWING

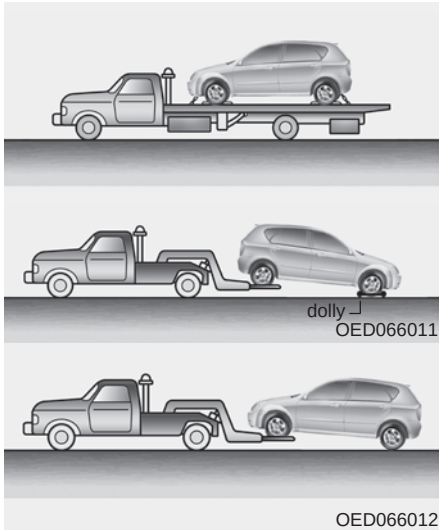

Towing service

If emergency towing is necessary, we recommend having it done by an authorized Kia dealer or a commercial tow-truck service. Proper lifting and towing procedures are necessary to prevent damage to the vehicle. The use of wheel dollies or flatbed is recommended.

For trailer towing guidelines information, refer to "Trailer towing" in section 5.

It is acceptable to tow the vehicle with the rear wheels on the ground (without dollies) and the front wheels off the ground.

If any of the loaded wheels or suspension components are damaged or the vehicle is being towed with the front wheels on the ground, use a towing dolly under the front wheels.

When being towed by a commercial tow truck and wheel dollies are not used, the front of the vehicle should always be lifted, not the rear.

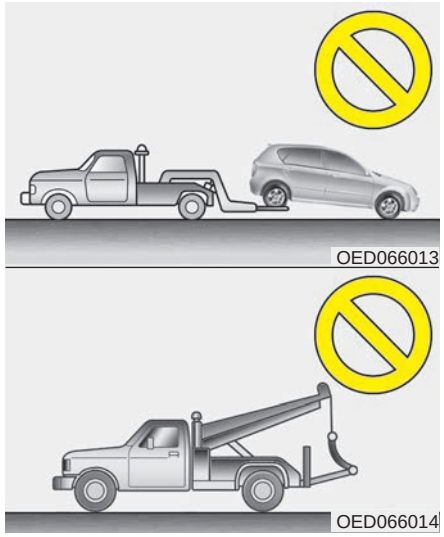

⚠ CAUTION

- ***Do not tow the vehicle backwards with the front wheels on the ground as this may cause damage to the vehicle.***
- ***Do not tow with sling-type equipment. Use wheel lift or flatbed equipment.***

YN ENG 6.QXP 4/16/2012 10:06 AM Page 26

When towing your vehicle in an emergency without wheel dollies :

1. Set the ignition switch in the ACC position.
2. Place the transaxle shift lever in N (Neutral).
3. Release the parking brake.

⚠ CAUTION

Failure to place the transaxle shift lever in N (Neutral) may cause internal damage to the transaxle.

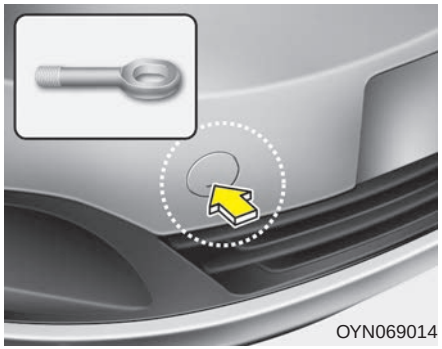

OYN069014

Removable towing hook (front) (if equipped)

1. Open the tailgate, and remove the towing hook from the tool case.
2. Remove the hole cover pressing the lower part of the cover on the front bumper.

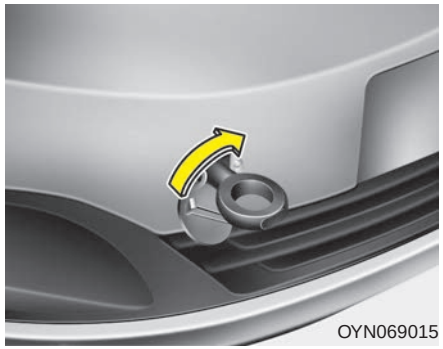

OYN069015

3. Install the towing hook by turning it clockwise into the hole until it is fully secured.
4. Remove the towing hook and install the cover after use.

YN ENG 6.QXP 4/16/2012 10:06 AM Page 27

■ Front

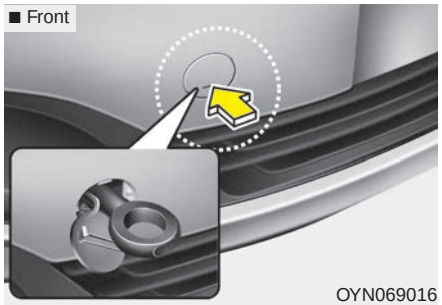

OYN069016

■ Rear

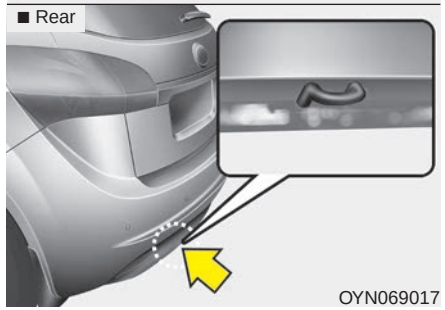

OYN069017

Emergency towing

If towing is necessary, we recommend you to have it done by an authorized Kia dealer or a commercial tow truck service.

If towing service is not available in an emergency, your vehicle may be temporarily towed using a cable or chain secured to the emergency towing hook under the front (or rear) of the vehicle. Use extreme caution when towing the vehicle. A driver must be in the vehicle to steer it and operate the brakes.

Towing in this manner may be done only on hard-surfaced roads for a short distance and at low speed. Also, the wheels, axles, power train, steering and brakes must all be in good condition.

- Do not use the tow hooks to pull a vehicle out of mud, sand or other conditions from which the vehicle cannot be driven out under its own power.
- Avoid towing a vehicle heavier than the vehicle doing the towing.
- The drivers of both vehicles should communicate with each other frequently.

⚠ CAUTION

- ***Attach a towing strap to the tow hook.***
- ***Using a portion of the vehicle other than the tow hooks for towing may damage the body of your vehicle.***
- ***Use only a cable or chain specifically intended for use in towing vehicles. Securely fasten the cable or chain to the towing hook provided.***

- Before emergency towing, check if the hook is not broken or damaged.
- Fasten the towing cable or chain securely to the hook.
- Do not jerk the hook. Apply it steadily and with even force.
- To avoid damaging the hook, do not pull from the side or at a vertical angle. Always pull straight ahead.

YN ENG 6.QXP 4/16/2012 10:06 AM Page 28

⚠ WARNING

Use extreme caution when towing the vehicle.

- **Avoid sudden starts or erratic driving maneuvers which would place excessive stress on the emergency towing hook and towing cable or chain. The hook and towing cable or chain may break and cause serious injury or damage.**
- **If the disabled vehicle is unable to move, do not forcibly continue the towing. We recommend that you contact an authorized Kia dealer or a commercial tow truck service for assistance.**
- **Tow the vehicle as straight ahead as possible.**
- **Keep away from the vehicle during towing.**

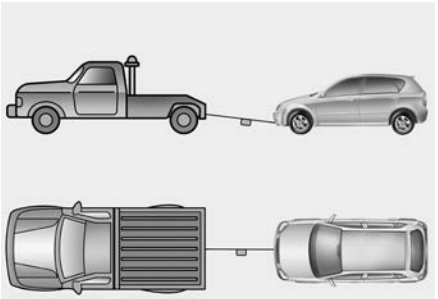

OED066029

- Use a towing strap less than 5 m (16 feet) long. Attach a white or red cloth (about 30 cm (12 inches) wide) in the middle of the strap for easy visibility.
- Drive carefully so that the towing strap is not loosened during towing.

Emergency towing precautions

- Turn the ignition switch to ACC so the steering wheel isn't locked.
- Place the transaxle shift lever in N (Neutral).
- Release the parking bake.
- Press the brake pedal with more force than normal since you will have reduced brake performance.
- More steering effort will be required because the power steering system will be disabled.
- If you are driving down a long hill, the brakes may overheat and brake performance will be reduced. Stop often and let the brakes cool off.

⚠ CAUTION - Automatic transaxle

- ***If the car is being towed with all four wheels on the ground, it can be towed only from the front. Be sure that the transaxle is in neutral. Be sure the steering is unlocked by placing the ignition switch in the ACC position. A driver must be in the towed vehicle to operate the steering and brakes.***
- ***To avoid serious damage to the automatic transaxle, limit the vehicle speed to 15 km/h (10 mph) and drive less than 1.5 km (1 mile) when towing.***
- ***Before towing, check the level of the automatic transaxle fluid. If it is below the "HOT" range on the dipstick, add fluid. If you cannot add fluid, a towing dolly must be used.***

YN ENG 6.QXP 4/16/2012 10:06 AM Page 29

Tie-down hook
(for flatbed towing, if equipped)

⚠ WARNING
Do not use the tie-down hooks under the front (or rear) of the vehicle for towing purposes. These hooks are designed ONLY for transport tie-down. If the tie-down hooks are used for towing, the tie-down hooks or front (or rear) bumper will be damaged and this could lead to serious injury.

YN ENG 7.QXP 4/16/2012 10:07 AM Page 1

Engine compartment / 7-2
Maintenance services / 7-3
Owner maintenance / 7-5
Scheduled maintenance service / 7-7
Explanation of scheduled maintenance items / 7-20
Engine oil / 7-24
Engine coolant / 7-25
Brake/clutch fluid / 7-28
Automatic transaxle fluid / 7-29
Washer fluid / 7-31
Parking brake / 7-31
Fuel filter / 7-32
Air cleaner / 7-33
Climate control air filter / 7-34
Wiper blades / 7-36
Battery / 7-39
Tires and wheels / 7-42
Fuses / 7-52

Maintenance 7

Light bulbs / 7-63
Appearance care / 7-72
Emission control system / 7-78

YN ENG 7.QXP 4/16/2012 10:07 AM Page 2

ENGINE COMPARTMENT

■ **Gasoline Engine**

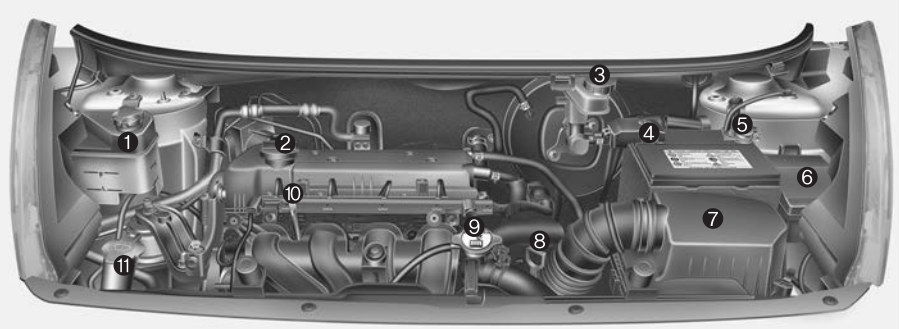

■ **Diesel Engine**

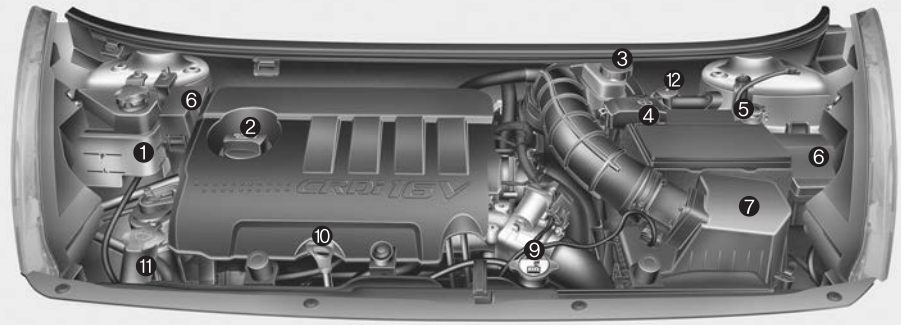

1. Engine coolant reservoir
2. Engine oil filler cap
3. Brake fluid reservoir
4. Positive battery terminal
5. Negative battery terminal
6. Fuse box
7. Air cleaner
8. Auto transaxle oil dipstick*
9. Radiator cap
10. Engine oil dipstick
11. Windshield washer fluid reservoir
12. Fuel filter

* if equipped

❈ The actual engine room in the vehicle may differ from the illustration.

OYN022003/OYN072002-1

YN ENG 7.QXP 4/16/2012 10:07 AM Page 3

MAINTENANCE SERVICES

You should exercise the utmost care to prevent damage to your vehicle and injury to yourself whenever performing any maintenance or inspection procedures.

Inadequate, incomplete or insufficient servicing may result in operational problems with your vehicle that could lead to vehicle damage, an accident, or personal injury.

Owner's responsibility

✻ NOTICE

Maintenance Service and Record Retention are the owner's responsibility.

We recommend in general that you have your vehicle serviced by an authorized Kia dealer. You should retain documents that show proper maintenance has been performed on your vehicle in accordance with the scheduled maintenance service charts shown on the following pages. You need this information to establish your compliance with the servicing and maintenance requirements of your vehicle warranties. Detailed warranty information is provided in your Service Passport. Repairs and adjustments required as a result of improper maintenance or a lack of required maintenance are not covered when your vehicle is covered by warranty.

Owner maintenance precautions

Improper or incomplete service may result in problems. This section gives instructions only for the maintenance items that are easy to perform.

✻ NOTICE

Improper owner maintenance during the warranty period may affect warranty coverage. For details, read the separate Warranty & Maintenance book provided with the vehicle. If you're unsure about any servicing or maintenance procedure, we recommend that the system be serviced by an authorized Kia dealer.

YN ENG 7.QXP 4/16/2012 10:07 AM Page 4

⚠ WARNING - Maintenance work

- **Performing maintenance work on a vehicle can be dangerous. You can be seriously injured while performing some maintenance procedures. If you lack sufficient knowledge and experience or the proper tools and equipment to do the work, we recommend that the system be serviced by an authorized Kia dealer.**
- **Working under the hood with the engine running is dangerous. It becomes even more dangerous when you wear jewelry or loose clothing. These can become entangled in moving parts and result in injury. Therefore, if you must run the engine while working under the hood, make certain that you remove all jewelry (especially rings, bracelets, watches, and necklaces) and all neckties, scarves, and similar loose clothing before getting near the engine or cooling fans.**

⚠ WARNING - Diesel Engine

Never work on injection system with engine running or within 30 seconds after shutting off engine. High-pressure pump, rail, injectors and high-pressure pipes are subject to high pressure even after the engine stopped. The fuel jet produced by fuel leaks may cause serious injury, if it touches the body. People using pacemakers should not move than 30cm closer to the ECU or wiring harness within the engine room while engine is running, since the high currents in the electronic engine control system produce considerable magnetic fields.

YN ENG 7.QXP 4/16/2012 10:07 AM Page 5

OWNER MAINTENANCE

The following lists are vehicle checks and inspections that should be performed at the frequencies indicated to help ensure safe, dependable operation of your vehicle. If you have any question, we recommend that you consult an authorized Kia dealer.

These Owner Maintenance Checks are generally not covered by warranties and you may be charged for labor, parts and lubricants used.

Owner maintenance schedule

When you stop for fuel:

- Check the engine oil level.
- Check the coolant level in coolant reservoir.
- Check the windshield washer fluid level.
- Look for low or under-inflated tires.

⚠ WARNING

Be careful when checking your engine coolant level when the engine is hot. Scalding hot coolant and steam may blow out under pressure. This could cause burns or other serious injury.

While operating your vehicle:

- Note any changes in the sound of the exhaust or any smell of exhaust fumes in the vehicle.
- Check for vibrations in the steering wheel. Notice any increased steering effort or looseness in the steering wheel, or change in its straight-ahead position.
- Notice if your vehicle constantly turns slightly or “pulls” to one side when traveling on smooth, level road.
- When stopping, listen and check for unusual sounds, pulling to one side, increased brake pedal travel or “hard-to-push” brake pedal.
- If any slipping or changes in the operation of your transaxle occurs, check the transaxle fluid level.
- Check automatic transaxle P (Park) function.
- Check the parking brake.
- Check for fluid leaks under your vehicle (water dripping from the air conditioning system during or after use is normal).

YN ENG 7.QXP 4/16/2012 10:07 AM Page 6

At least monthly:

- Check the coolant level in the engine coolant reservoir.
- Check the operation of all exterior lights, including the stoplights, turn signals and hazard warning flashers.
- Check the inflation pressures of all tires including the spare.

At least twice a year (i.e., every Spring and Fall):

- Check the radiator, heater and air conditioning hoses for leaks or damage.
- Check the windshield washer spray and wiper operation. Clean wiper blades with clean cloth dampened with washer fluid.
- Check the headlight alignment.
- Check the muffler, exhaust pipes, shields and clamps.
- Check the lap/shoulder belts for wear and function.
- Check for worn tires and loose wheel lug nuts.

At least once a year:

- Clean the body and door drain holes.
- Lubricate the door hinges and checks, and hood hinges.
- Lubricate the door and hood locks and latches.
- Lubricate the door rubber weatherstrips.
- Check the air conditioning system.
- Inspect and lubricate automatic transaxle linkage and controls.
- Clean the battery and terminals.
- Check the brake/clutch fluid level.

YN ENG 7.QXP 4/16/2012 10:07 AM Page 7

SCHEDULED MAINTENANCE SERVICE

Follow the Normal Maintenance Schedule if the vehicle is usually operated where none of the following conditions apply. If any of the following conditions apply, follow Maintenance Under Severe Usage Conditions.

- Repeated short distance driving.
- Driving in dusty conditions or sandy areas.
- Extensive use of brakes.
- Driving in areas where salt or other corrosive materials are being used.
- Driving on rough or muddy roads.
- Driving in mountainous areas.
- Extended periods of idling or low speed operation.
- Driving for a prolonged period in cold temperatures and/or extremely humid climates.
- More than 50% driving in heavy city traffic during hot weather above 32°C (90°F).

If your vehicle is operated under the above conditions, you should inspect, replace or refill more frequently than the following Normal Maintenance Schedule. After the periods or distance shown in the chart, continue to follow the prescribed maintenance intervals.

YN ENG 7.QXP 4/16/2012 10:07 AM Page 8

NORMAL MAINTENANCE SCHEDULE - 1.4L/1.6L GASOLINE ENGINE

MAINTENANCE INTERVALS / MAINTENANCE ITEM		Number of months or driving distance, whichever comes first							
	Months	12	24	36	48	60	72	84	96
	Miles×1,000	12.5	25	37.5	50	62.5	75	87.5	100
	Km×1,000	20	40	60	80	100	120	140	160
Drive belts *1	For Europe	At first, inspect 80,000 km or 72 months after that, inspect every 20,000 km or 24 months							
	Except Europe	Inspect every 30,000 km or 24 months							
Engine oil and engine oil filter *2	For Middle East	Replace every 10,000 km or 12 months *3							
	Except Middle East	R	R	R	R	R	R	R	R
Air cleaner filter	For China, India, Middle East	R	R	R	R	R	R	R	R
	Except China, India, Middle East	I	R	I	R	I	R	I	R
Spark plugs			R		R		R		R
Valve clearance *4		Inspect every 80,000 km or 72 months *5							

I : Inspect and if necessary, adjust, correct, clean or replace.

R : Replace or change.

*1 : Adjust alternator and power steering (and water pump drive belt) and air conditioner drive belt (if equipped). Inspect and if necessary correct or replace.

*2 : Check the engine oil level and leak every 500 km (350 miles) or before starting a long trip.

*3 : Driving in summer season temperature over 40 °C (104 °F - SAUDI, UAE, OMAN, KUWAIT, BAHRAIN, QATAR, IRAN, YEMEN ETC) or driving over 170 km/h (106 mile/h) must conform the severe driving condition.

*4 : Inspect for excessive valve noise and/or engine vibration and adjust if necessary. We recommend that the system be serviced by an authorized Kia dealer.

*5 : For your convenience, it can be replaced prior to it's interval when you do maintenance of other items.

YN ENG 7.QXP 4/16/2012 10:07 AM Page 9

NORMAL MAINTENANCE SCHEDULE - 1.4L/1.6L GASOLINE ENGINE (CONT.)

MAINTENANCE INTERVALS / MAINTENANCE ITEM		Number of months or driving distance, whichever comes first							
	Months	**12**	**24**	**36**	**48**	**60**	**72**	**84**	**96**
	Miles×1,000	**12.5**	**25**	**37.5**	**50**	**62.5**	**75**	**87.5**	**100**
	Km×1,000	**20**	**40**	**60**	**80**	**100**	**120**	**140**	**160**
Vapor hose and fuel filler cap		I	I	I	I	I	I	I	I
Fuel filter *6	For Europe			I			I		
	Except Europe	I	I	R	I	I	R	I	I
Fuel lines, hoses and connections		I	I	I	I	I	I	I	I
Cooling system		Inspect “Coolant level adjustment and leak” every day Inspect “Water pump” when replacing the drive belt or timing belt							
Add fuel additives *7	For Europe	Every 15,000 km or 12 months							
	Except Europe	Every 5,000 km or 6 months							

I : Inspect and if necessary, adjust, correct, clean or replace.

R : Replace or change.

*6 : In case of hard starting or abnormal fuel pressure, replace the fuel filter immediately regardless of maintenance schedule.

*7 : If good quality gasolines meet Europe Fuel standards (EN228) or equivalents including fuel additives is not available, one bottle of additive is recommended. Additives are available from your authorized Kia dealer along with information on how to use them. Do not mix other additives.

YN ENG 7.QXP 4/16/2012 10:07 AM Page 10

NORMAL MAINTENANCE SCHEDULE - 1.4L/1.6L GASOLINE ENGINE (CONT.)

MAINTENANCE INTERVALS / MAINTENANCE ITEM		Number of months or driving distance, whichever comes first							
	Months	**12**	**24**	**36**	**48**	**60**	**72**	**84**	**96**
	Miles×1,000	**12.5**	**25**	**37.5**	**50**	**62.5**	**75**	**87.5**	**100**
	Km×1,000	**20**	**40**	**60**	**80**	**100**	**120**	**140**	**160**
Engine coolant *8		At first, replace at 200,000 km (120,000 miles) or 120 months: after that, replace every 40,000 km (25,000 miles) or 24 months *5							
Battery condition		I	I	I	I	I	I	I	I
Brake lines, hoses and connections		I	I	I	I	I	I	I	I
Parking brake		I	I	I	I	I	I	I	I
Brake/clutch fluid	For Europe	I	R	I	R	I	R	I	R
	Except Europe	I	I	I	I	I	I	I	I
Disc brakes and pads		I	I	I	I	I	I	I	I

I : Inspect and if necessary, adjust, correct, clean or replace.

R : Replace or change.

*8 : When adding coolant, use only deionized water or soft water for your vehicle and never mix hard water in the coolant filled at the factory. An improper coolant mixture can result in serious malfunction or engine damage.

*5 : For your convenience, it can be replaced prior to it's interval when you do maintenance of other items.

YN ENG 7.QXP 4/16/2012 10:07 AM Page 11

NORMAL MAINTENANCE SCHEDULE - 1.4L/1.6L GASOLINE ENGINE (CONT.)

MAINTENANCE INTERVALS / MAINTENANCE ITEM		Number of months or driving distance, whichever comes first							
	Months	12	24	36	48	60	72	84	96
	Miles×1,000	12.5	25	37.5	50	62.5	75	87.5	100
	Km×1,000	20	40	60	80	100	120	140	160
Steering gear rack, linkage and boots		I	I	I	I	I	I	I	I
Drive shaft and boots		I	I	I	I	I	I	I	I
Tire (pressure & tread wear)		I	I	I	I	I	I	I	I
Front suspension ball joints		I	I	I	I	I	I	I	I
Air conditioner refrigerant (if equipped)		I	I	I	I	I	I	I	I
Air conditioner compressor (if equipped)		I	I	I	I	I	I	I	I
Climate control air filter (if equipped)	For Europe	R	R	R	R	R	R	R	R
	Except Europe	Replace every 15,000 km (10,000 miles)							
Manual transaxle fluid (if equipped)		Inspect every 60,000 km or 48 months							
Automatic transaxle fluid (if equipped)				I			I		
Exhaust system			I		I		I		I

I : Inspect and if necessary, adjust, correct, clean or replace.
R : Replace or change.

YN ENG 7.QXP 4/16/2012 10:07 AM Page 12

MAINTENANCE UNDER SEVERE USAGE CONDITIONS - 1.4L/1.6L GASOLINE ENGINE

The following items must be serviced more frequently on cars mainly used under severe driving conditions.
Refer to the chart below for the appropriate maintenance intervals.

R : Replace I : Inspect and if necessary, adjust, correct, clean or replace

MAINTENANCE ITEM		Maintenance operation	Maintenance intervals	Driving condition
Engine oil and engine oil filter	For Middle East	R	Every 5,000 km or 6 months	A, B, C, D, E, F, G, H, I
	Except Middle East	R	Every 10,000 km (6,250 miles) or 6 months	
Air cleaner filter		R	Replace more frequently depending on the condition	C, E
Spark plugs		R	Replace more frequently depending on the condition	B, H, I
Manual transaxle fluid (if equipped)		R	Every 120,000 km (75,000 miles)*1	C, D, E, G, H, I, J
Automatic transaxle fluid (if equipped)		R	Every 100,000 km (62,500 miles)	A, C, E, F, G, H, I
Steering gear rack, linkage and boots		I	Inspect more frequently depending on the condition	C, D, E, F, G

*1 : For your convenience, it can be replaced prior to it's interval when you do maintenance of other items.

YN ENG 7.QXP 4/16/2012 10:07 AM Page 13

MAINTENANCE ITEM	Maintenance operation	Maintenance intervals	
Front suspension ball joints	I	Inspect more frequently depending on the condition	C, D, E, F, G
Disc brakes and pads, calipers and rotors	I	Inspect more frequently depending on the condition	C, D, E, G, H
Parking brake	I	Inspect more frequently depending on the condition	C, D, G, H
Drive shaft and boots	I	Inspect more frequently depending on the condition	C, D, E, G, H, I, J
Climate control air filter (if equipped)	R	Replace more frequently depending on the condition	C, E

Severe driving conditions

A : Repeated short distance driving
B : Extensive idling
C : Driving in dusty, rough roads
D : Driving in areas using salt or other corrosive materials or in very cold weather
E : Driving in sandy areas
F : More than 50 % driving in heavy city traffic during hot weather above 32 °C (90 °F)
G : Driving in mountainous areas.
H : Towing a trailer
I : Driving for patrol car, taxi, commercial car or vehicle towing
J : Driving over 170 km/h (106 mile/h)

YN ENG 7.QXP 4/16/2012 10:07 AM Page 14

NORMAL MAINTENANCE SCHEDULE - 1.4L/1.6L DIESEL ENGINE

MAINTENANCE INTERVALS / MAINTENANCE ITEM		Number of months or driving distance, whichever comes first							
	Months	**12**	**24**	**36**	**48**	**60**	**72**	**84**	**96**
	Miles×1,000	**20**	**40**	**60**	**80**	**100**	**120**	**140**	**160**
	Km×1,000	**30**	**60**	**90**	**120**	**150**	**180**	**210**	**240**
Drive belts *1	For Europe	At first, inspect 90,000 km (60,000 miles) or 48 months after that, inspect every 30,000 km (20,000 miles) or 24 months							
	Except Europe	At first, inspect 80,000 km (50,000 miles) or 48 months after that, inspect every 20,000 km (12,500 miles) or 12 months							
Engine oil and engine oil filter *2 *3	For Europe*4	R	R	R	R	R	R	R	R
	Except Europe	Replace every 10,000 km (6,000 miles) or 12 months							
Air cleaner filter	For China, India, Middle East	Replace every 15,000 km (10,000 miles)							
	Except China, India, Middle East	I	R	I	R	I	R	I	R

I : Inspect and if necessary, adjust, correct, clean or replace.

R : Replace or change.

*1 : Inspect drive belt tensioner, idler and alternator pulley and if necessary correct or replace.

*2 : Check the engine oil level and leak every 500 km (350 miles) or before starting a long trip.

*3 : This maintenance schedule depends on fuel quality. It is applicable only when using a qualified fuel <"EN590 or equivalent">. If the diesel fuel specifications don't meet the EN590, it must be replaced more frequently. If there are some important safety matters like fuel flow restriction, surging, loss of power, hard starting problem etc., replace the fuel filter immediately regardless of maintenance schedule. We recommend that you consult an authorized Kia dealer.

*4 : The engine oil level should be checked regularly and maintained properly.
Operating with an insufficient amount oil can damage the engine, and such damage is not covered by warranty.

YN ENG 7.QXP 4/16/2012 10:07 AM Page 15

NORMAL MAINTENANCE SCHEDULE - 1.4L/1.6L DIESEL ENGINE (CONT.)

MAINTENANCE INTERVALS / MAINTENANCE ITEM		Number of months or driving distance, whichever comes first							
	Months	12	24	36	48	60	72	84	96
	Miles×1,000	20	40	60	80	100	120	140	160
	Km×1,000	30	60	90	120	150	180	210	240
Vapor hose and fuel filler cap		Inspect every 60,000 km or 48 months							
Fuel filter cartridge	For Europe *5	Inspect every 30,000 km or 24 months, and replace every 60,000 km or 48 months							
	Except Europe*6								
Fuel lines, hoses and connections		Inspect every 30,000 km or 24 months							

I : Inspect and if necessary, adjust, correct, clean or replace.

R : Replace or change.

*5 : This maintenance schedule depends on fuel quality. It is applicable only when using a qualified fuel <"EN590 or equivalent">. If the diesel fuel specifications don't meet the EN590, it must be replaced more frequently.

If there are some important safety matters like fuel flow restriction, surging, loss of power, hard starting problem etc., replace the fuel filter immediately regardless of maintenance schedule. We recommend that you consult an authorized Kia dealer.

*6 : This maintenance schedule depends on fuel quality. It is applicable only when using a qualified fuel <"EN590 or equivalent">. If the diesel fuel specifications don't meet the EN590, it must be replaced more frequently. Kia recommends "every 7,500km inspection, every 15,000km replacement".

If there are some important safety matters like fuel flow restriction, surging, loss of power, hard starting problem etc., replace the fuel filter immediately regardless of maintenance schedule. We recommend that you consult an authorized Kia dealer.

YN ENG 7.QXP 4/16/2012 10:07 AM Page 16

NORMAL MAINTENANCE SCHEDULE - 1.4L/1.6L DIESEL ENGINE (CONT.)

MAINTENANCE INTERVALS / MAINTENANCE ITEM		Number of months or driving distance, whichever comes first							
	Months	12	24	36	48	60	72	84	96
	Miles×1,000	20	40	60	80	100	120	140	160
	Km×1,000	30	60	90	120	150	180	210	240
Cooling system		Inspect “Coolant level adjustment and leak” every day							
		At first, inspect 60,000 km or 48 months after that, inspect every 30,000 km or 24 months							
Engine coolant *7	For Europe	At first, replace at 210,000 km (120,000 miles) or 120 months: after that, replace every 30,000 km (20,000 miles) or 24 months *8							
	Except Europe	At first, replace at 200,000 km (120,000 miles) or 120 months: after that, replace every 40,000 km (25,000 miles) or 24 months *8							
Battery condition		Inspect every 30,000 km or 24 months							
Brake lines, hoses and connections		I	I	I	I	I	I	I	I
Parking brake		I	I	I	I	I	I	I	I
Brake/clutch fluid	For Europe	Replace every 30,000 km or 24 months *8							
	Except Europe	I	I	I	I	I	I	I	I

I : Inspect and if necessary, adjust, correct, clean or replace.

R : Replace or change.

*7 : When adding coolant, use only deionized water or soft water for your vehicle and never mix hard water in the coolant filled at the factory. An improper coolant mixture can result in serious malfunction or engine damage.

*8 : For your convenience, it can be replaced prior to it's interval when you do maintenance of other items.

YN ENG 7.QXP 4/16/2012 10:07 AM Page 17

NORMAL MAINTENANCE SCHEDULE - 1.4L/1.6L DIESEL ENGINE (CONT.)

MAINTENANCE INTERVALS / MAINTENANCE ITEM	Number of months or driving distance, whichever comes first							
	Months	**12**	**24**	**36**	**48**	**60**	**72**	**84**	**96**
	Miles×1,000	**20**	**40**	**60**	**80**	**100**	**120**	**140**	**160**
	Km×1,000	**30**	**60**	**90**	**120**	**150**	**180**	**210**	**240**
Disc brakes and pads		I	I	I	I	I	I	I	I
Steering gear rack, linkage and boots		I	I	I	I	I	I	I	I
Drive shaft and boots		I	I	I	I	I	I	I	I
Tire (pressure & tread wear)		I	I	I	I	I	I	I	I
Front suspension ball joints		I	I	I	I	I	I	I	I
Air conditioner compressor (if equipped)			I	I	I	I	I	I	I
Climate control air filter (if equipped)		Replace every 30,000 km or 24 months							
Manual transaxle fluid (if equipped)		Inspect every 60,000 km or 48 months							
Exhaust system		I	I	I	I	I	I	I	I

I : Inspect and if necessary, adjust, correct, clean or replace.
R : Replace or change.

YN ENG 7.QXP 4/16/2012 10:07 AM Page 18

MAINTENANCE UNDER SEVERE USAGE CONDITIONS - 1.4L/1.6L DIESEL ENGINE

The following items must be serviced more frequently on cars mainly used under severe driving conditions.
Refer to the chart below for the appropriate maintenance intervals.

R : Replace I : Inspect and if necessary, adjust, correct, clean or replace

MAINTENANCE ITEM		Maintenance operation	Maintenance intervals	Driving condition
Engine oil and engine oil filter	For Europe	R	Every 15,000 km (10,000 miles) or 6 months	A, B, C, F, G, H, I, J, K, L
	Except Europe	R	Every 5,000 km (3,000 miles) or 6 months	
Air cleaner filter		R	Replace more frequently depending on the condition	C, E
Manual transaxle fluid (if equipped)		R	Every 120,000 km (80,000 miles)	C, D, E, G, H, I, K
Steering gear rack, linkage and boots		I	Inspect more frequently depending on the condition	C, D, E, F, G

YN ENG 7.QXP 4/16/2012 10:07 AM Page 19

MAINTENANCE ITEM	Maintenance operation	Maintenance intervals	Driving condition
Front suspension ball joints	I	Inspect more frequently depending on the condition	C, D, E, F, G
Disc brakes and pads, calipers and rotors	I	Inspect more frequently depending on the condition	C, D, E, G, H
Parking brake	I	Inspect more frequently depending on the condition	C, D, G, H
Drive shaft and boots	I	Inspect more frequently depending on the condition	C, D, E, F, G, H, I
Climate control air filter (if equipped)	R	Replace more frequently depending on the condition	C, E, G

Severe driving conditions

A : Repeated short distance driving
B : Extensive idling
C : Driving in dusty, rough roads
D : Driving in areas using salt or other corrosive materials or in very cold weather
E : Driving in sandy areas
F : More than 50 % driving in heavy city traffic during hot weather above 32 °C (90 °F)
G : Driving in mountainous areas.
H : Towing a trailer
I : Driving for patrol car, taxi, commercial car or vehicle towing
J : Driving in very cold weather
K : Driving over 170 km/h (106 mile/h)
L : Frequently driving in stop-and-go conditions

YN ENG 7.QXP 4/16/2012 10:07 AM Page 20

EXPLANATION OF SCHEDULED MAINTENANCE ITEMS

Engine oil and filter

The engine oil and filter should be changed at the intervals specified in the maintenance schedule. If the car is being driven in severe conditions, more frequent oil and filter changes are required.

Drive belts

Inspect all drive belts for evidence of cuts, cracks, excessive wear or oil saturation and replace if necessary. Drive belts should be checked periodically for proper tension and adjusted as necessary.

Fuel filter (cartridge)

A clogged filter can limit the speed at which the vehicle may be driven, damage the emission system and cause multiple issues such as hard starting. If an excessive amount of foreign matter accumulates in the fuel tank, the filter may require replacement more frequently.

After installing a new filter, run the engine for several minutes, and check for leaks at the connections. We recommend that the fuel filter be replaced by an authorized Kia dealer.

Fuel lines, fuel hoses and connections

Check the fuel lines, fuel hoses and connections for leakage and damage. We recommend that the fuel lines, fuel hoses and connections be replaced by an authorized Kia dealer.

⚠ WARNING - Diesel only

Never work on injection system with engine running or within 30 seconds after shutting off engine. High pressure pump, rail, injectors and high pressure pipes are subject to high pressure even after the engine stopped. The fuel jet produced by fuel leaks may cause serious injury, if it touch the body. People using pacemakers should not move than 30cm closer to the ECU or wiring harness within the engine room while engine is running, since the high currents in the Common Rail system produce considerable magnetic fields.

YN ENG 7.QXP 4/16/2012 10:07 AM Page 21

Timing belt (if equipped)

Inspect all parts related to the timing belt for damage and deformation. Replace any damaged parts immediately.

Vapor hose and fuel filler cap

The vapor hose and fuel filler cap should be inspected at those intervals specified in the maintenance schedule. Make sure that a new vapor hose or fuel filler cap is correctly replaced.

Vacuum crankcase ventilation hoses (if equipped)

Inspect the surface of hoses for evidence of heat and/or mechanical damage. Hard and brittle rubber, cracking, tears, cuts, abrasions, and excessive swelling indicate deterioration. Particular attention should be paid to examine those hose surfaces nearest to high heat sources, such as the exhaust manifold.

Inspect the hose routing to assure that the hoses do not come in contact with any heat source, sharp edges or moving component which might cause heat damage or mechanical wear. Inspect all hose connections, such as clamps and couplings, to make sure they are secure, and that no leaks are present. Hoses should be replaced immediately if there is any evidence of deterioration or damage.

Air cleaner filter

We recommend that you use air cleaner filter for replacement from an authorized Kia dealer.

Spark plugs (for gasoline engine)

Make sure to install new spark plugs of the correct heat range.

Valve clearance (if equipped)

Inspect for excessive valve noise and/or engine vibration and adjust if necessary. We recommend that the system be serviced by an authorized Kia dealer.

YN ENG 7.QXP 4/16/2012 10:07 AM Page 22

Cooling system

Check cooling system components, such as radiator, coolant reservoir, hoses and connections for leakage and damage. Replace any damaged parts.

Coolant

The coolant should be changed at the intervals specified in the maintenance schedule.

Manual transaxle fluid (if equipped)

Inspect the manual transaxle fluid according to the maintenance schedule.

Automatic transaxle fluid (if equipped)

The fluid level should be in the "HOT" range of the dipstick, after the engine and transaxle are at normal operating temperature. Check the automatic transaxle fluid level with the engine running and the transaxle in neutral, with the parking brake properly applied.

Brake hoses and lines

Visually check for proper installation, chafing, cracks, deterioration and any leakage. Replace any deteriorated or damaged parts immediately.

Brake fluid

Check brake fluid level in the brake fluid reservoir. The level should be between “MIN” and “MAX” marks on the side of the reservoir. Use only hydraulic brake fluid conforming to DOT 3 or DOT 4 specification.

Parking brake

Inspect the parking brake system including the parking brake pedal and cables.

Brake discs, pads, calipers and rotors

Check the pads for excessive wear, discs for run out and wear, and calipers for fluid leakage.

For more information on checking the pads or lining wear limit, we recommend to refer to the Kia web site.

(**http://brakemanual.kia.co.kr**)

Suspension mounting bolts

Check the suspension connections for looseness or damage. Retighten to the specified torque.

YN ENG 7.QXP 4/16/2012 10:07 AM Page 23

Steering gear box, linkage & boots/lower arm ball joint

With the vehicle stopped and engine off, check for excessive free-play in the steering wheel.

Check the linkage for bends or damage. Check the dust boots and ball joints for deterioration, cracks, or damage. Replace any damaged parts.

Drive shafts and boots

Check the drive shafts, boots and clamps for cracks, deterioration, or damage. Replace any damaged parts and, if necessary, repack the grease.

Air conditioning refrigerant (if equipped)

Check the air conditioning lines and connections for leakage and damage.

YN ENG 7.QXP 4/16/2012 10:07 AM Page 24

ENGINE OIL

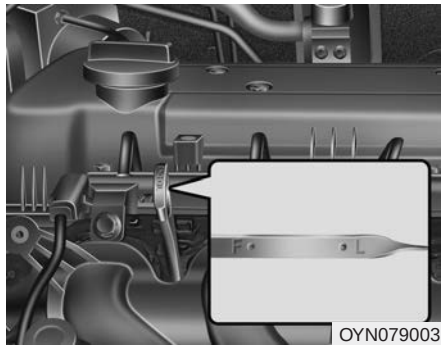

OYN079003

Checking the engine oil level

1. Be sure the vehicle is on level ground.
2. Start the engine and allow it to reach normal operating temperature.
3. Turn the engine off and wait for a few minutes (about 5 minutes) for the oil to return to the oil pan.
4. Pull the dipstick out, wipe it clean, and reinsert it fully.

⚠ WARNING - Radiator hose

Be very careful not to touch the radiator hose when checking or adding the engine oil as it may be hot enough to burn you.

5. Pull the dipstick out again and check the level. The level should be between F and L.

⚠ CAUTION - Diesel engine

Overfilling the engine oil may cause severe dieseling due to churning effect. It may lead to engine damage accompanied with abrupt engine speed increment, combustion noise and white smoke emission.

⚠ CAUTION

Do not spill engine oil, when adding or changing engine oil. If you drop the engine oil on the engine room, wipe it off immediately.

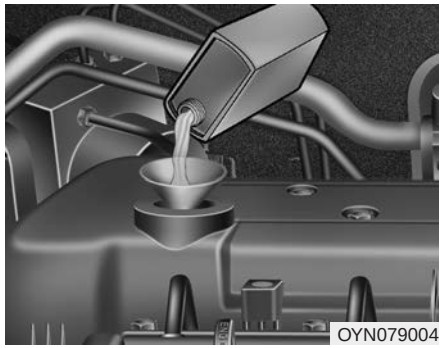
OYN079004

If it is near or at L, add enough oil to bring the level to F. **Do not overfill.**

Use a funnel to help prevent oil from being spilled on engine components.

Use only the specified engine oil. (Refer to "Recommended lubricants and capacities" in section 8.)

⚠ CAUTION

Do not overfill the engine oil. It may damage the engine.

YN ENG 7.QXP 4/16/2012 10:07 AM Page 25

Changing the engine oil and filter

We recommend that the engine oil and filter be replaced by an authorized Kia dealer.

⚠ WARNING

Used engine oil may cause skin irritation or cancer if left in contact with the skin for prolonged periods of time. Used engine oil contains chemicals that have caused cancer in laboratory animals. Always protect your skin by washing your hands thoroughly with soap and warm water as soon as possible after handling used oil.

ENGINE COOLANT

The high-pressure cooling system has a reservoir filled with year-round antifreeze coolant. The reservoir is filled at the factory.

Check the antifreeze protection and coolant level at least once a year, at the beginning of the winter season, and before traveling to a colder climate.

Checking the coolant level

⚠ WARNING



Removing radiator cap

- **Never attempt to remove the radiator cap while the engine is operating or hot. Doing so might lead to cooling system and engine damage. Also hot coolant or steam could cause serious personal injury.**

(Continued)

(Continued)

- **Turn the engine off and wait until it cools down. Use extreme care when removing the radiator cap. Wrap a thick towel around it, and turn it counterclockwise slowly to the first stop. Step back while the pressure is released from the cooling system.**

  When you are sure all the pressure has been released, press down on the cap, using a thick towel, and continue turning counterclockwise to remove it.
- **Even if the engine is not operating, do not remove the radiator cap or the drain plug while the engine and radiator are hot. Hot coolant and steam may still blow out under pressure, causing serious injury.**

YN ENG 7.QXP 4/16/2012 10:07 AM Page 26

⚠ WARNING



The electric motor (cooling fan) is controlled by engine coolant temperature, refrigerant pressure and vehicle speed. It may sometimes operate even when the engine is not running. Use extreme caution when working near the blades of the cooling fan so that you are not injured by a rotating fan blades. As the engine coolant temperature decreases, the electric motor will automatically shut off. This is a normal condition.

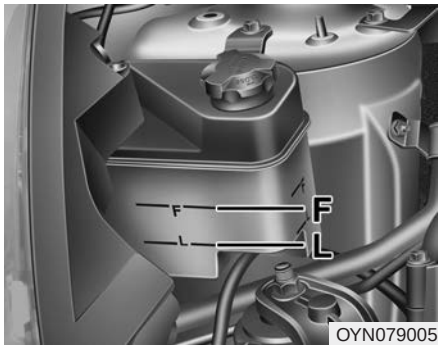

Check the condition and connections of all cooling system hoses and heater hoses. Replace any swollen or deteriorated hoses.

The coolant level should be filled between F and L marked on the side of the coolant reservoir when the engine is cool.

If the coolant level is low, add enough distilled (deionzed) water to provide protection against freezing and corrosion. Bring the level to F, but do not overfill. If frequent additions are required, we recommend that the system be inspected by an authorized Kia dealer.

Recommended engine coolant

- When adding coolant, use only deionized water or soft water for your vehicle and never mix hard water in the coolant filled at the factory. An improper coolant mixture can result in serious malfunction or engine damage.
- The engine in your vehicle has aluminum engine parts and must be protected by an ethylene-glycol-based coolant to prevent corrosion and freezing.
- DO NOT USE alcohol or methanol coolant or mix them with the specified coolant.
- Do not use a solution that contains more than 60% antifreeze or less than 35% antifreeze, which would reduce the effectiveness of the solution.

YN ENG 7.QXP 4/16/2012 10:08 AM Page 27

For mixture percentage, refer to the following table.

Ambient Temperature	Mixture Percentage (volume)	
	Antifreeze	Water
-15°C (5°F)	35	65
-25°C (-13°F)	40	60
-35°C (-31°F)	50	50
-45°C (-49°F)	60	40

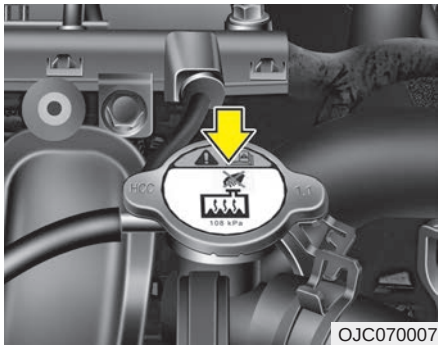
OJC070007

⚠ WARNING



Radiator cap

Do not remove the radiator cap when the engine and radiator are hot. Scalding hot coolant and steam may blow out under pressure causing serious injury.

Changing the coolant

We recommend that the coolant be replaced by an authorized Kia dealer.

⚠ CAUTION

Put a thick cloth or fabric around the radiator cap before refilling the coolant in order to prevent the coolant from overflowing into engine parts such as the alternator.

⚠ WARNING - Coolant

- **Do not use radiator coolant or antifreeze in the washer fluid reservoir.**
- **Radiator coolant can severely obscure visibility when sprayed on the windshield and may cause loss of vehicle control or damage to paint and body trim.**

YN ENG 7.QXP 4/16/2012 10:08 AM Page 28

BRAKE/CLUTCH FLUID (IF EQUIPPED)

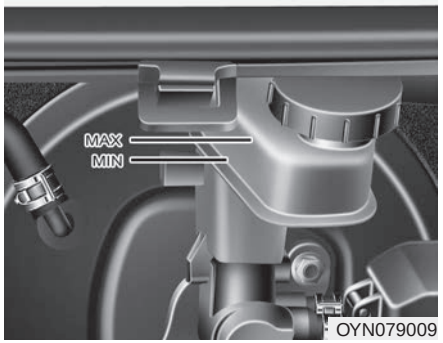

Checking the brake/clutch fluid level

Check the fluid level in the reservoir periodically. The fluid level should be between MAX and MIN marks on the side of the reservoir.

Before removing the reservoir cap and adding brake/clutch fluid, clean the area around the reservoir cap thoroughly to prevent brake/clutch fluid contamination.

* The actual feature may differ from the illustration.

If the level is low, add fluid to the MAX level. The level will fall with accumulated mileage. This is a normal condition associated with the wear of the brake linings and/or clutch disc (if equipped). If the fluid level is excessively low, we recommend that the system be checked by an authorized Kia dealer.

Use only the specified brake/clutch fluid. (Refer to "Recommended lubricants or capacities" in section 8.)

Never mix different types of fluid.

⚠ WARNING - Loss of brake fluid

In the event the brake system requires frequent additions of fluid, we recommend that the system be inspected by an authorized Kia dealer.

⚠ WARNING - Brake/clutch fluid

When changing and adding brake/clutch fluid, handle it carefully. Do not let it come in contact with your eyes. If brake/clutch fluid come in contact with your eyes, immediately flush them with a large quantity of fresh tap water. Have your eyes examined by a doctor as soon as possible.

⚠ CAUTION

Do not allow brake/clutch fluid to contact the vehicle's body paint, as paint damage will result.

Brake/clutch fluid, which has been exposed to open air for an extended time should never be used as its quality cannot be guaranteed. It should be properly disposed. Don't put in the wrong kind of fluid. A few drops of mineral-based oil, such as engine oil, in your brake/clutch system can damage brake/clutch system parts.

YN ENG 7.QXP 4/16/2012 10:08 AM Page 29

AUTOMATIC TRANSAXLE FLUID (IF EQUIPPED)

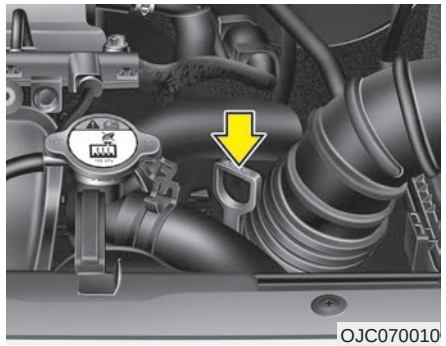
OJC070010

Checking the automatic transaxle fluid level

The automatic transaxle fluid level should be checked regularly.

Keep the vehicle on the level ground with the parking brake applied and check the fluid level according to the following procedure.

1. Place the shift lever in N (Neutral) position and confirm the engine is running at normal idle speed.
2. After the transaxle is warmed up sufficiently [fluid temperature 70~80°C (158~176°F)], for example by 10 minutes usual driving, move the shift lever through all positions then place the shift lever in N(Neutral) or P(Park) position.

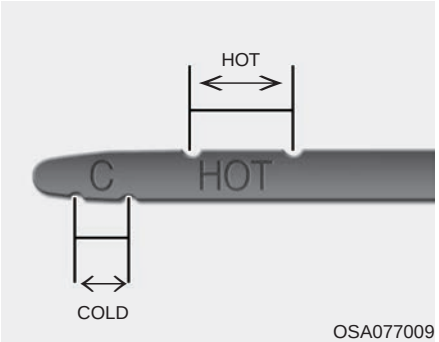

OSA077009

3. Confirm if the fluid level is in the "HOT" range on the level gauge. If the fluid level is lower, add the specified fluid from the fill hole. If the fluid level is higher, drain the fluid from the drain hole.
4. If the fluid level is checked in cold condition [fluid temperature 20~30 °C (68~86 °F)], add the fluid to the “C” (COLD) line and then recheck the fluid level according to the above step 2.

✻ NOTICE

“C” (COLD) range is for reference only and should NOT be used to determine transaxle fluid level.

⚠ WARNING - Transaxle fluid

The transaxle fluid level should be checked when the engine is at normal operating temperature. This means that the engine, radiator, radiator hose and exhaust system etc., are very hot. Exercise great care not to burn yourself during this procedure.

⚠ CAUTION

- ***Low fluid level causes transaxle shift slippage. Overfilling can cause foaming, loss of fluid and transaxle malfunction.***
- ***The use of a non-specified fluid could result in transaxle malfunction and failure.***

⚠ WARNING - Parking brake

To avoid sudden movement of the vehicle, apply parking brake and depress the brake pedal before moving the shift lever.

YN ENG 7.QXP 4/16/2012 10:08 AM Page 30

✻ NOTICE

New automatic transaxle fluid should be red. The red dye is added so the assembly plant can identify it as automatic transaxle fluid and distinguish it from engine oil or antifreeze. The red dye, which is not an indicator of fluid quality, is not permanent. As the vehicle is driven, the automatic transaxle fluid will begin to look darker. The color may eventually appear light brown. Therefore, we recommend that the system be replaced by an authorized Kia dealer according to the Scheduled Maintenance at the beginning of this section.

Use only specified automatic transaxle fluid. (Refer to "Recommended lubricants or capacities" in section 8.)

Changing the automatic transaxle fluid

We recommend that the system be replaced by an authorized Kia dealer. According to the Maintenance Schedule at the beginning of this section.

YN ENG 7.QXP 4/16/2012 10:08 AM Page 31

WASHER FLUID

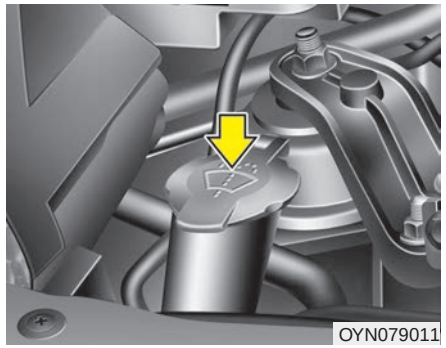

Checking the washer fluid level

Check the fluid level in the washer fluid reservoir and add fluid if necessary. Plain water may be used if washer fluid is not available. However, use washer solvent with antifreeze characteristics in cold climates to prevent freezing.

⚠ WARNING - Coolant

- **Do not use radiator coolant or antifreeze in the washer fluid reservoir.**
- **Radiator coolant can severely obscure visibility when sprayed on the windshield and may cause loss of vehicle control or damage to the paint and body trim.**
- **Windshield Washer fluid agents contain some amounts of alcohol and can be flammable under certain circumstances. Do not allow sparks or flame come in contact with the washer fluid or the washer fluid reservoir. Damage to the vehicle or occupants could occur.**
- **Windshield washer fluid is poisonous to humans and animals. Do not drink and avoid coming in contact with the windshield washer fluid. Serious injury or death could occur.**

PARKING BRAKE

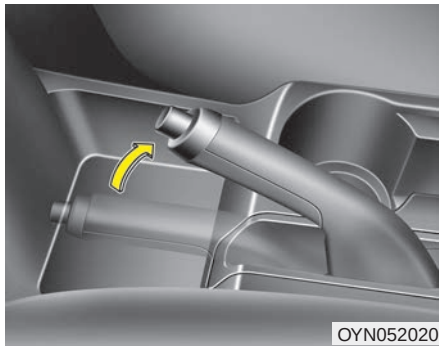

Checking the parking brake

Check the stroke of the parking brake by counting the number of “clicks” heard while fully applying it from the released position. Also, the parking brake alone should securely hold the vehicle on a fairly steep grade. If the stroke is more or less than specified, we recommend that the system be serviced by an authorized Kia dealer.

Stroke : 5~7 “clicks” at a force of 20 kg (44 lbs, 196 N).

YN ENG 7.QXP 4/16/2012 10:08 AM Page 32

FUEL FILTER (FOR DIESEL)

Draining water from the fuel filter

The fuel filter for diesel engine plays an important role of separating water from fuel and accumulating the water in its bottom.

If water accumulates in the fuel filter, the warning light comes on when the ignition switch is in the ON position.



If this warning light illuminates, we recommend that you contact an authorized Kia dealer.

⚠ CAUTION

If the water accumulated in the fuel filter is not drained at proper times, damages to the major parts such as the fuel system can be caused by water permeation in the fuel filter.

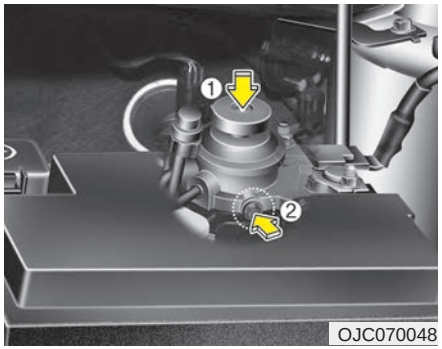

Extracting air from the fuel filter

If you drove until you have no fuel left or if you replaced the fuel filter, be sure to extract air in the fuel system as it makes you difficult to start the engine.

1. Press the priming pump (1) several times.
2. Open the air extracting hall after removing the bolt (2) using a screwdriver to extract air.

✻ NOTICE

Repeat the procedure above until all the air is out.

✻ NOTICE

- **Use cloths when you extract air so that the fuel is not sprayed around.**
- **Clean the fuel around the fuel filter or the injection pump before starting the engine to prevent fire.**
- **Finally, check each part if the fuel is leaking.**

Fuel filter cartridge replacement

✻ NOTICE

When replacing the fuel filter cartridge, we recommend that you use parts for replacement from an authorized Kia dealer.

YN ENG 7.QXP 4/16/2012 10:08 AM Page 33

AIR CLEANER

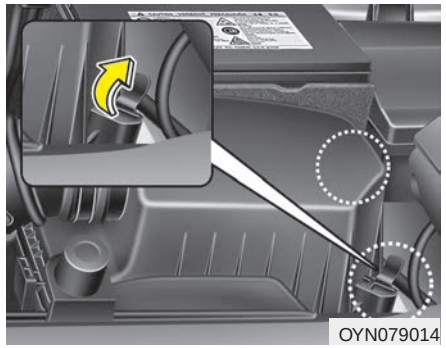
OYN079014

Filter replacement

You can clean the filter when inspecting the air cleaner element.

Clean the filter by using compressed air.

1. Loosen the air cleaner cover attaching clips and open the cover.

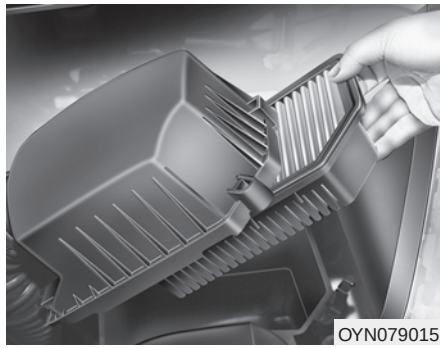
OYN079015

2. Wipe the inside of the air cleaner.
3. Replace the air cleaner filter.
4. Lock the cover with the cover attaching clips.

Replace the filter according to the Maintenance Schedule.

If the vehicle is operated in extremely dusty or sandy areas, replace the element more often than the usual recommended intervals. (Refer to "Maintenance under severe usage conditions" in this section.)

⚠ CAUTION

- ***Do not drive with the air cleaner removed; this will result in excessive engine wear.***
- ***When removing the air cleaner filter, be careful that dust or dirt does not enter the air intake, or damage may result.***
- ***We recommend that you use parts for replacement from an authorized Kia dealer.***

YN ENG 7.QXP 4/16/2012 10:08 AM Page 34

CLIMATE CONTROL AIR FILTER (IF EQUIPPED)

Filter inspection

If the vehicle is operated in the severely air-polluted cities or on dusty rough roads for a long period, it should be inspected more frequently and replaced earlier. When you, the owner, replace the climate control air filter, replace it performing the following procedure, and be careful to avoid damaging other components.

Replace the filter according to the maintenance Schedule.

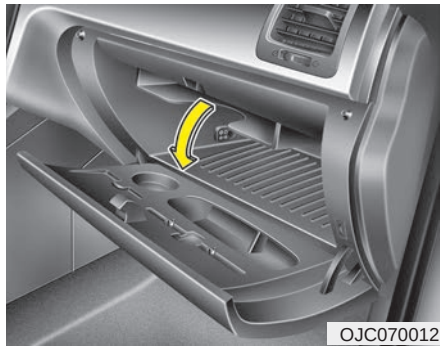
OJC070012

Filter replacement

1. Open the glove box.

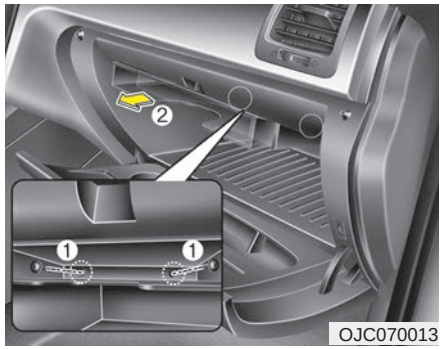

OJC070013

2. Loosen the screws (1) and then remove the glove box inner panel (2).

YN ENG 7.QXP 4/16/2012 10:08 AM Page 35

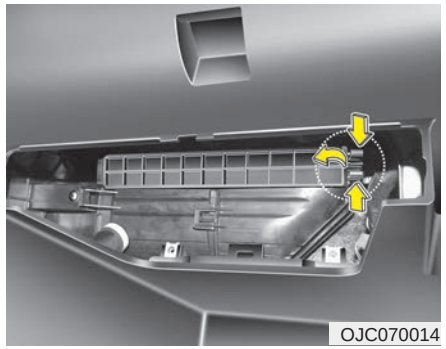
OJC070014

3. Remove the climate control air filter cover while pressing the lock on the right side of the cover.

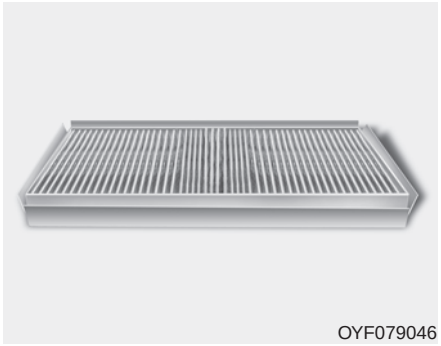
OYF079046

4. Replace the climate control air filter.
5. Reassemble in the reverse order of disassembly.

✻ NOTICE

When replacing the climate control air filter install it properly. Otherwise, the system may produce noise and the effectiveness of the filter may be reduced.

YN ENG 7.QXP 4/16/2012 10:08 AM Page 36

WIPER BLADES

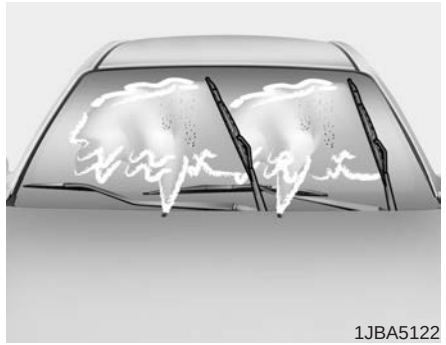
1JBA5122

Blade inspection

✻ NOTICE

Commercial hot waxes applied by automatic car washes have been known to make the windshield difficult to clean.

Contamination of either the windshield or the wiper blades with foreign matter can reduce the effectiveness of the windshield wipers. Common sources of contamination are insects, tree sap, and hot wax treatments used by some commercial car washes. If the blades are not wiping properly, clean both the window and the blades with a good cleaner or mild detergent, and rinse thoroughly with clean water.

⚠ CAUTION

To prevent damage to the wiper blades, do not use gasoline, kerosene, paint thinner, or other solvents on or near them.

Blade replacement

When the wipers no longer clean adequately, the blades may be worn or cracked, and require replacement.

⚠ CAUTION

To prevent damage to the wiper arms or other components, do not attempt to move the wipers manually.

⚠ CAUTION

The use of a non-specified wiper blade could result in wiper malfunction and failure.

YN ENG 7.QXP 4/16/2012 10:08 AM Page 37


OYN079060

Front windshield wiper blade

1. Raise the wiper arm.

⚠ CAUTION

Do not allow the wiper arm to fall against the windshield, since it may chip or crack the windshield.

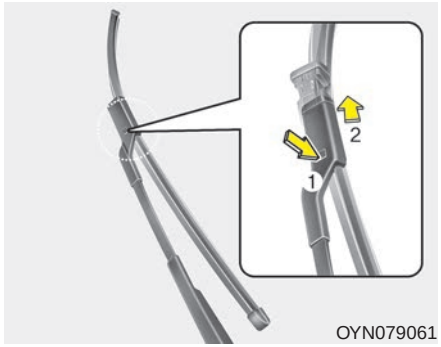

OYN079061

2. Press the button and slide the blade assembly upward.

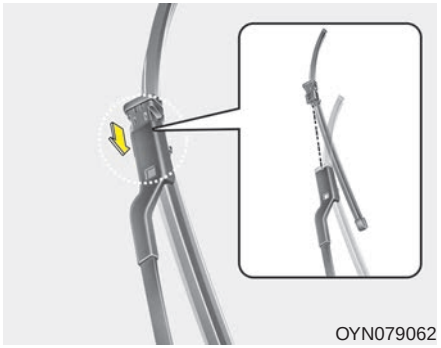
OYN079062

3. Install the blade assembly in the reverse order of removal.
4. Return the wiper arm on the windshield.

YN ENG 7.QXP 4/16/2012 10:09 AM Page 38

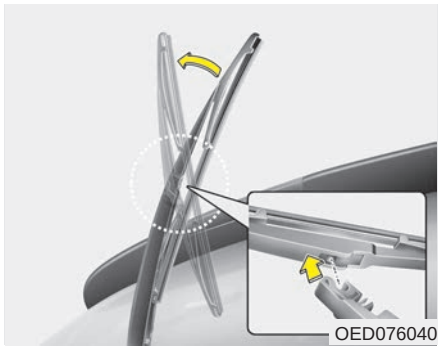
OED076040

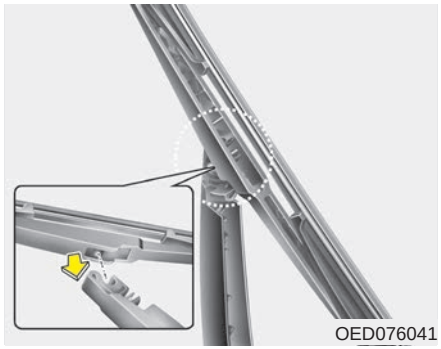
OED076041

Rear window wiper blade

1. Raise the wiper arm and pull out the wiper blade assembly.
2. Install the new blade assembly by inserting the center part into the slot in the wiper arm until it clicks into place.
3. Make sure the blade assembly is installed firmly by trying to pulling it slightly.
4. Place back the wiper arm to the proper position.

YN ENG 7.QXP 4/16/2012 10:09 AM Page 39

BATTERY

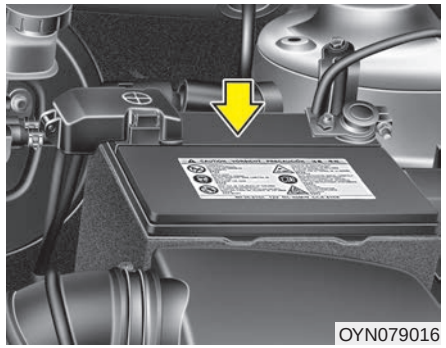
OYN079016

For best battery service

- Keep the battery securely mounted.
- Keep the battery top clean and dry.
- Keep the terminals and connections clean, tight, and coated with petroleum jelly or terminal grease.
- Rinse any spilled electrolyte from the battery immediately with a solution of water and baking soda.
- If the vehicle is not going to be used for an extended time, disconnect the battery cables.

⚠ WARNING - Battery dangers

Always read the following instructions carefully when handling a battery.

Keep lighted cigarettes and all other flames or sparks away from the battery.

Hydrogen, a highly combustible gas, is always present in battery cells and may explode if ignited.

Keep batteries out of the reach of children because batteries contain highly corrosive SULFURIC ACID. Do not allow battery acid to contact your skin, eyes, clothing or paint finish.

If any electrolyte gets into your eyes, flush your eyes with clean water for at least 15 minutes and get immediate medical attention.

If electrolyte gets on your skin, thoroughly wash the contacted area. If you feel a pain or a burning sensation, get medical attention immediately.

(Continued)

(Continued)

Wear eye protection when charging or working near a battery. Always provide ventilation when working in an enclosed space.

An inappropriately disposed battery can be harmful to the environment and human health.

Dispose the battery according to your local law(s) or regulation.

The battery contains lead. Do not dispose of it after use. We recommend that you contact an authorized Kia dealer.

- **When lifting a plastic-cased battery, excessive pressure on the case may cause battery acid to leak, resulting in personal injury. Lift with a battery carrier or with your hands on opposite corners.**
- **Never attempt to recharge the battery when the battery cables are connected.**

(Continued)

YN ENG 7.QXP 4/16/2012 10:09 AM Page 40

(Continued)

- **The electrical ignition system works with high voltage. Never touch these components with the engine running or the ignition switched on.**

Failure to follow the above warnings can result in serious bodily injury or death.

⚠ CAUTION

- ***When you don't use the vehicle for a long time in the low temperature area, separate the battery and keep it indoors.***
- ***Always charge the battery fully to prevent battery case damage in low temperature area.***
- ***If you connect unauthorized electric devices to the battery, the battery may be discharged. Never use unauthorized devices.***

⚠ WARNING

Separating the battery from the vehicle is recommended to an authorized Kia dealer.

Example



OJD072039

✻ The actual battery label in the vehicle may differ from the illustration.

Battery capacity label (see the example)

1. CMF65L-BCI : The Kia model name of battery
2. 12V : The nominal voltage
3. 60Ah(20HR) : The nominal capacity (in Ampere hours)
4. 92RC : The nominal reserve capacity (in min.)
5. 550CCA : The cold-test current in amperes by SAE
6. 440A : The cold-test current in amperes by EN

Battery recharging

Your vehicle has a maintenance-free, calcium-based battery.

- If the battery becomes discharged in a short time (because, for example, the headlights or interior lights were left on while the vehicle was not in use), recharge it by slow charging (trickle) for 10 hours.
- If the battery gradually discharges because of high electric load while the vehicle is being used, recharge it at 20-30A for two hours.

⚠ CAUTION - AGM battery (if equipped)

- ***Absorbent Glass Matt (AGM) batteries are maintenance-free and we recommend that the system be serviced by an authorized Kia dealer. For charging your AGM battery, use only fully automatic battery chargers that are specially developed for AGM batteries.***
- ***When replacing the AGM battery, we recommend that you use parts for replacement from an authorized Kia dealer.***

(Continued)

YN ENG 7.QXP 4/16/2012 10:09 AM Page 41

(Continued)

- *If the AGM battery is reconnected or replaced, ISG function will not operate immediately.*
  If you want to use the ISG function, the battery sensor needs to be calibrated for approximately 4 hours with the ignition off.

⚠ WARNING - Recharging battery

When recharging the battery, observe the following precautions:

- **The battery must be removed from the vehicle and placed in an area with good ventilation.**
- **Do not allow cigarettes, sparks, or flame near the battery.**
- **Watch the battery during charging, and stop or reduce the charging rate if the battery cells begin gassing (boiling) violently or if the temperature of the electrolyte of any cell exceeds 49°C (120°F).**
- **Wear eye protection when checking the battery during charging.**

(Continued)

(Continued)

- **Disconnect the battery charger in the following order.**

1. **Turn off the battery charger main switch.**
2. **Unhook the negative clamp from the negative battery terminal.**
3. **Unhook the positive clamp from the positive battery terminal.**

⚠ WARNING

- **Before performing maintenance or recharging the battery, turn off all accessories and stop the engine.**
- **The negative battery cable must be removed first and installed last when the battery is disconnected.**

Reset items

Items should be reset after the battery has been discharged or the battery has been disconnected.

- Auto up/down window (See section 4)
- Sunroof (See section 4)
- Trip computer (See section 4)
- Climate control system (See section 4)
- Clock (See section 4)
- Audio (See section 4)

YN ENG 7.QXP 4/16/2012 10:09 AM Page 42

TIRES AND WHEELS

Tire care

For proper maintenance, safety, and maximum fuel economy, you must always maintain recommended tire inflation pressures and stay within the load limits and weight distribution recommended for your vehicle.

Recommended cold tire inflation pressures

All tire pressures (including the spare) should be checked when the tires are cold. “Cold Tires” means the vehicle has not been driven for at least three hours or driven less than 1.6 km (one mile).

Recommended pressures must be maintained for the best ride, top vehicle handling, and minimum tire wear.

For recommended inflation pressure, refer to “Tire and wheels” in section 8.

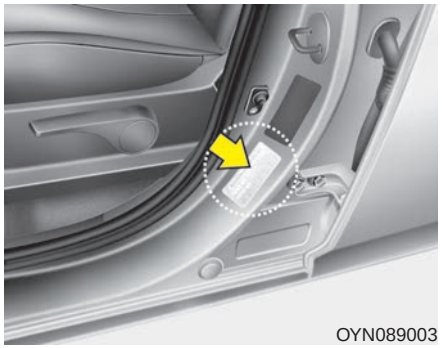

OYN089003

All specifications (sizes and pressures) can be found on a label attached to the vehicle.

⚠ WARNING - Tire underinflation

Severe underinflation (70 kPa (10 psi) or more) can lead to severe heat build-up, causing blowouts, tread separation and other tire failures that can result in the loss of vehicle control leading to severe injury or death. This risk is much higher on hot days and when driving for long periods at high speeds.

⚠ CAUTION

- ***Underinflation also results in excessive wear, poor handling and reduced fuel economy. Wheel deformation also is possible. Keep your tire pressures at the proper levels. If a tire frequently needs refilling, we recommend that the system be checked by an authorized Kia dealer.***
- ***Overinflation produces a harsh ride, excessive wear at the center of the tire tread, and a greater possibility of damage from road hazards.***

YN ENG 7.QXP 4/16/2012 10:09 AM Page 43

⚠ CAUTION

- ***Warm tires normally exceed recommended cold tire pressures by 28 to 41 kPa (4 to 6 psi). Do not release air from warm tires to adjust the pressure or the tires will be underinflated.***
- ***Be sure to reinstall the tire inflation valve caps. Without the valve cap, dirt or moisture could get into the valve core and cause air leakage. If a valve cap is missing, install a new one as soon as possible.***

⚠ WARNING - Tire Inflation

Overinflation or underinflation can reduce tire life, adversely affect vehicle handling, and lead to sudden tire failure. This could result in loss of vehicle control and potential injury.

⚠ CAUTION - Tire pressure

Always observe the following:

- ***Check tire pressure when the tires are cold. (After vehicle has been parked for at least three hours or hasn't been driven more than 1.6 km (one mile) since startup.)***
- ***Check the pressure of your spare tire each time you check the pressure of other tires.***
- ***Never overload your vehicle. Be careful not to overload a vehicle luggage rack if your vehicle is equipped with one.***
- ***Worn, old tires can cause accidents. If your tread is badly worn, or if your tires have been damaged, replace them.***

Checking tire inflation pressure

Check your tires once a month or more.

Also, check the tire pressure of the spare tire.

How to check

Use a good quality gage to check tire pressure. You can not tell if your tires are properly inflated simply by looking at them. Radial tires may look properly inflated even when they're underinflated.

Check the tire's inflation pressure when the tires are cold. - "Cold" means your vehicle has been sitting for at least three hours or driven no more than 1.6 km (1 mile).

YN ENG 7.QXP 4/16/2012 10:09 AM Page 44

Remove the valve cap from the tire valve stem. Press the tire gage firmly onto the valve to get a pressure measurement. If the cold tire inflation pressure matches the recommended pressure on the tire and loading information label, no further adjustment is necessary. If the pressure is low, add air until you reach the recommended amount.

If you overfill the tire, release air by pushing on the metal stem in the center of the tire valve. Recheck the tire pressure with the tire gage. Be sure to put the valve caps back on the valve stems. They help prevent leaks by keeping out dirt and moisture.

⚠ WARNING

- **Inspect your tires frequently for proper inflation as well as wear and damage. Always use a tire pressure gauge.**
- **Tires with too much or too little pressure wear unevenly causing poor handling, loss of vehicle control, and sudden tire failure leading to accidents, injuries, and even death. The recommended cold tire pressure for your vehicle can be found in this manual and on the tire label located on the driver's side center pillar.**
- **Worn tires can cause accidents. Replace tires that are worn, show uneven wear, or are damaged.**
- **Remember to check the pressure of your spare tire. Kia recommends that you check the spare every time you check the pressure of the other tires on your vehicle.**

Tire rotation

To equalize tread wear, it is recommended that the tires be rotated every 12,000 km (7,500 miles) or sooner if irregular wear develops.

During rotation, check the tires for correct balance.

When rotating tires, check for uneven wear and damage. Abnormal wear is usually caused by incorrect tire pressure, improper wheel alignment, out-of-balance wheels, severe braking or severe cornering. Look for bumps or bulges in the tread or side of tire. Replace the tire if you find either of these conditions. Replace the tire if fabric or cord is visible. After rotation, be sure to bring the front and rear tire pressures to specification and check lug nut tightness.

Refer to “Tire and wheels” in section 8.

YN ENG 7.QXP 4/16/2012 10:09 AM Page 45

With a full-size spare tire

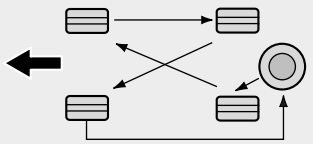

CBGQ0706

Without a spare tire

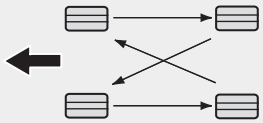

CBGQ0707

Directional tires (if equipped)

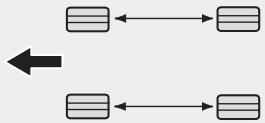

CBGQ0707A

Disc brake pads should be inspected for wear whenever tires are rotated.

✻ NOTICE

Rotate radial tires that have an asymmetric tread pattern only from front to rear and not from right to left.

⚠ WARNING

- **Do not use the compact spare tire for tire rotation.**
- **Do not mix bias ply and radial ply tires under any circumstances. This may cause unusual handling characteristics that could result in death, severe injury, or property damage.**

Wheel alignment and tire balance

The wheels on your vehicle were aligned and balanced carefully at the factory to give you the longest tire life and best overall performance.

In most cases, you will not need to have your wheels aligned again. However, if you notice unusual tire wear or your vehicle pulling one way or the other, the alignment may need to be reset.

If you notice your vehicle vibrating when driving on a smooth road, your wheels may need to be rebalanced.

⚠ CAUTION

Improper wheel weights can damage your vehicle's aluminum wheels. Use only approved wheel weights.

YN ENG 7.QXP 4/16/2012 10:09 AM Page 46



Tire replacement

If the tire is worn evenly, a tread wear indicator will appear as a solid band across the tread. This shows there is less than 1.6 mm (1/16 inch) of tread left on the tire. Replace the tire when this happens.

Do not wait for the band to appear across the entire tread before replacing the tire.

⚠ WARNING - Replacing tires

To reduce the chance or serious or fatal injuries from an accident caused by tire failure or loss of vehicle control:

- **Replace tires that are worn, show uneven wear, or are damaged. Worn tires can cause loss of braking effectiveness, steering control, and traction.**
- **Do not drive your vehicle with too little or too much pressure in your tires. This can lead to uneven wear and tire failure.**
- **When replacing tires, never mix radial and bias-ply tires on the same car. You must replace all tires (including the spare) if moving from radial to bias-ply tires.**

(Continued)

(Continued)

- **Using tires and wheel other than the recommended sizes could cause unusual handling characteristics and poor vehicle control, resulting in a serious accident.**
- **Wheels that do not meet recommended Kia's specifications may fit poorly and result in damage to the vehicle or unusual handling and poor vehicle control.**
- **The ABS works by comparing the speed of the wheels. Tire size can affect wheel speed. When replacing tires, all 4 tires must use the same size originally supplied with the vehicle. Using tires of a different size can cause the ABS (Anti-lock Brake System) and ESP (Electronic Stability Program) to work irregularly. (if equipped)**

YN ENG 7.QXP 4/16/2012 10:09 AM Page 47

Compact spare tire replacement (if equipped)

A compact spare tire has a shorter tread life than a regular size tire. Replace it when you can see the tread wear indicator bars on the tire. The replacement compact spare tire should be the same size and design tire as the one provided with your new vehicle and should be mounted on the same compact spare tire wheel. The compact spare tire is not designed to be mounted on a regular size wheel, and the compact spare tire wheel is not designed for mounting a regular size tire.

Wheel replacement

When replacing the metal wheels for any reason, make sure the new wheels are equivalent to the original factory units in diameter, rim width and offset.

⚠ WARNING

A wheel that is not the correct size may adversely affect wheel and bearing life, braking and stopping abilities, handling characteristics, ground clearance, body-to-tire clearance, snow chain clearance, speedometer and odometer calibration, headlight aim and bumper height.

Tire traction

Tire traction can be reduced if you drive on worn tires, tires that are improperly inflated or on slippery road surfaces. Tires should be replaced when tread wear indicators appear. Slow down whenever there is rain, snow or ice on the road, to reduce the possibility of losing control of the vehicle.

Tire maintenance

In addition to proper inflation, correct wheel alignment helps decrease tire wear. If you find a tire worn unevenly, have your dealer check the wheel alignment.

When you have new tires installed, make sure they are balanced. This will increase vehicle ride comfort and tire life. Additionally, a tire should always be rebalanced if it is removed from the wheel.

YN ENG 7.QXP 4/16/2012 10:09 AM Page 48

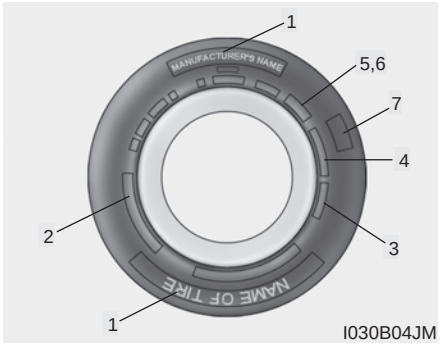

Tire sidewall labeling

This information identifies and describes the fundamental characteristics of the tire and also provides the tire identification number (TIN) for safety standard certification. The TIN can be used to identify the tire in case of a recall.

1. Manufacturer or brand name

Manufacturer or Brand name is shown.

2. Tire size designation

A tire's sidewall is marked with a tire size designation. You will need this information when selecting replacement tires for your car. The following explains what the letters and numbers in the tire size designation mean.

Example tire size designation:

(These numbers are provided as an example only; your tire size designator could vary depending on your vehicle.)

P205/55R16 91H

P - Applicable vehicle type (tires marked with the prefix "P" are intended for use on passenger cars or light trucks; however, not all tires have this marking).

205 - Tire width in millimeters.

55 - Aspect ratio. The tire's section height as a percentage of its width.

R - Tire construction code (Radial).

16 - Rim diameter in inches.

91 - Load Index, a numerical code associated with the maximum load the tire can carry.

H - Speed Rating Symbol. See the speed rating chart in this section for additional information.

Wheel size designation

Wheels are also marked with important information that you need if you ever have to replace one. The following explains what the letters and numbers in the wheel size designation mean.

Example wheel size designation:

6.0JX16

6.0 - Rim width in inches.

J - Rim contour designation.

16 - Rim diameter in inches.

YN ENG 7.QXP 4/16/2012 10:09 AM Page 49

Tire speed ratings

The chart below lists many of the different speed ratings currently being used for passenger car tires. The speed rating is part of the tire size designation on the sidewall of the tire. This symbol corresponds to that tire's designed maximum safe operating speed.

Speed Rating Symbol	Maximum Speed
S	180 km/h (112 mph)
T	190 km/h (118 mph)
H	210 km/h (130 mph)
V	240 km/h (149 mph)
Z	Above 240 km/h (149 mph)
W*	270 km/h (168 mph)

* W speed rating is sub-category of the Z speed rating.

3. Checking tire life (TIN : Tire Identification Number)

Any tires that are over 6 years old, based on the manufacturing date, (including the spare tire) should be replaced by new ones. You can find the manufacturing date on the tire sidewall (possibly on the inside of the wheel), displaying the DOT Code. The DOT Code is a series of numbers on a tire consisting of numbers and English letters. The manufacturing date is designated by the last four digits (characters) of the DOT code.

DOT : XXXX XXXX OOOO

The front part of the DOT means a plant code number, tire size and tread pattern and the last four numbers indicate week and year manufactured.

For example:

DOT XXXX XXXX 1612 represents that the tire was produced in the 16th week of 2012.

⚠ WARNING - Tire age

Tires degrade over time, even when they are not being used.

Regardless of the remaining tread, it is recommended that tires generally be replaced after six (6) years of normal service. Heat caused by hot climates or frequent high loading conditions can accelerate the aging process. Failure to follow this warning could cause sudden tire failure, which could lead to a loss of control and an accident involving serious injury or death.

4. Tire ply composition and material

The number of layers or plies of rubber-coated fabric in the tire. Tire manufacturers also must indicate the materials in the tire, which include steel, nylon, polyester, and others. The letter "R" means radial ply construction; the letter "D" means diagonal or bias ply construction; and the letter "B" means belted-bias ply construction.

YN ENG 7.QXP 4/16/2012 10:09 AM Page 50

5. Maximum permissible inflation pressure

This number is the greatest amount of air pressure that should be put in the tire. Do not exceed the maximum permissible inflation pressure. Refer to the Tire and Loading Information label for recommended inflation pressure.

6. Maximum load rating

This number indicates the maximum load in kilograms and pounds that can be carried by the tire. When replacing the tires on the vehicle, always use a tire that has the same load rating as the factory installed tire.

7. Uniform tire quality grading

Quality grades can be found where applicable on the tire sidewall between tread shoulder and maximum section width.

For example:

TREAD wear 200

TRACTION AA

TEMPERATURE A

Tread wear

The tread wear grade is a comparative rating based on the wear rate of the tire when tested under controlled conditions on a specified government test course. For example, a tire graded 150 would wear one-and-a-half times (1½) as well on the government course as a tire graded 100.

The relative performance of tires depends upon the actual conditions of their use, however, and may depart significantly from the norm due to variations in driving habits, service practices and differences in road characteristics and climate.

These grades are molded on the side-walls of passenger vehicle tires. The tires available as standard or optional equipment on your vehicle may vary with respect to grade.

Traction - AA, A, B & C

The traction grades, from highest to lowest, are AA, A, B and C. Those grades represent the tire's ability to stop on wet pavement measured under controlled conditions on specified government test surfaces of asphalt and concrete. A tire marked C may have poor traction performance.

⚠ WARNING

The traction grade assigned to this tire is based on straight-ahead braking traction tests, and does not include acceleration, cornering, hydroplaning, or peak traction characteristics.

YN ENG 7.QXP 4/16/2012 10:09 AM Page 51

Temperature -A, B & C

The temperature grades are A (the highest), B, and C, representing the tire's resistance to the generation of heat and its ability to dissipate heat when tested under controlled conditions on a specified indoor laboratory test wheel.

Sustained high temperature can cause the material of the tire to degenerate and reduce tire life, and excessive temperature can lead to sudden tire failure. Grades B and A represent higher levels of performance on the laboratory test wheel than the minimum required by law.

⚠ WARNING - Tire temperature

The temperature grade for this tire is established for a tire that is properly inflated and not overloaded. Excessive speed, underinflation, or excessive loading, either separately or in combination, can cause heat build-up and sudden tire failure. This can cause loss of vehicle control and serious injury or death.

YN ENG 7.QXP 4/16/2012 10:09 AM Page 52

FUSES

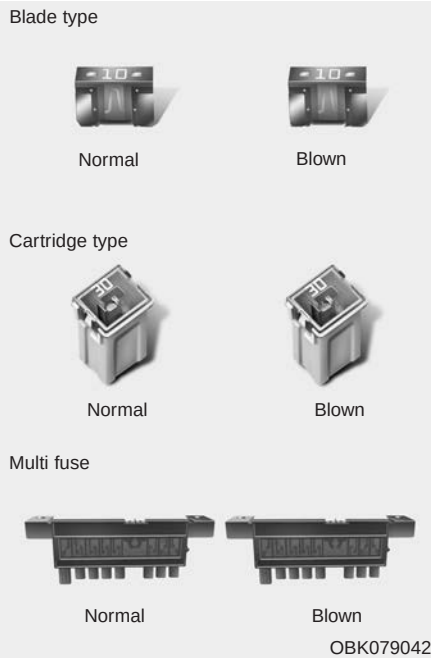

A vehicle's electrical system is protected from electrical overload damage by fuses.

This vehicle has 2 (or 3) fuse panels, one located in the driver's side panel bolster, the other in the engine compartment near the battery.

If any of your vehicle's lights, accessories, or controls do not work, check the appropriate circuit fuse. If a fuse has blown, the element inside the fuse will be melted.

If the electrical system does not work, first check the driver's side fuse panel.

Always replace a blown fuse with one of the same rating.

If the replacement fuse blows, this indicates an electrical problem. Avoid using the system involved and we recommend that you consult an authorized Kia dealer.

Three kinds of fuses are used: blade type for lower amperage rating, cartridge type and multi fuse for higher amperage ratings.

⚠ WARNING - Fuse replacement

- **Never replace a fuse with anything but another fuse of the same rating.**
- **A higher capacity fuse could cause damage and possibly a fire.**
- **Never install a wire or aluminum foil instead of the proper fuse - even as a temporary repair. It may cause extensive wiring damage and a possible fire.**

⚠ CAUTION

Do not use a screwdriver or any other metal object to remove fuses because it may cause a short circuit and damage the system.

✻ NOTICE

According to electronics option of vehicle, some fuse and relays written in bom label could not be applied.

✻ NOTICE

The actual fuse/relay panel label may differ from equipped items.

YN ENG 7.QXP 4/16/2012 10:09 AM Page 53

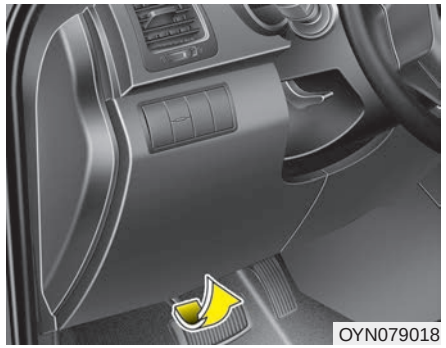
OYN079018

Instrument panel fuse replacement

1. Turn the ignition switch and all other switches off.
2. Open the fuse panel cover.


OYN079023

3. Pull the suspected fuse straight out. Use the removal tool provided in the engine compartment fuse panel cover.
4. Check the removed fuse; replace it if it is blown.
5. Push in a new fuse of the same rating, and make sure it fits tightly in the clips.

If it fits loosely, we recommend that you consult an authorized Kia dealer.

If you do not have a spare, use a fuse of the same rating from a circuit you may not need for operating the vehicle, such as the cigarette lighter fuse.

If the headlights or other electrical components do not work and the fuses are OK, check the fuse panel in the engine compartment. If a fuse is blown, it must be replaced.

YN ENG 7.QXP 4/16/2012 10:09 AM Page 54

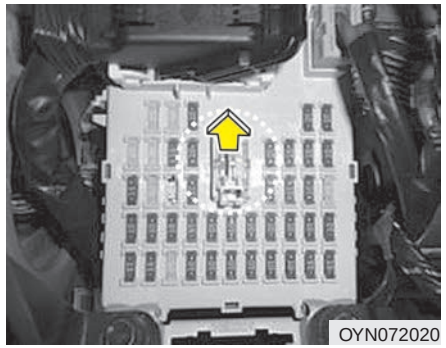
OYN072020

Memory fuse

Your vehicle is equipped with a memory fuse to prevent battery discharge if your vehicle is parked without being operated for prolonged periods. Use the following procedures before parking the vehicle for prolonged periods.

1. Turn off the engine.
2. Turn off the headlights and tail lights.
3. Open the driver's side panel cover and pull up the memory fuse.

✻ NOTICE

- **If the memory fuse is pulled up from the fuse panel, the warning chime, audio, clock and interior lamps, etc., will not operate. Some items must be reset after replacement. Refer to "Battery" in this section.**
- **Even though the memory fuse is pulled up, the battery can still be discharged by operation of the headlights or other electrical devices.**

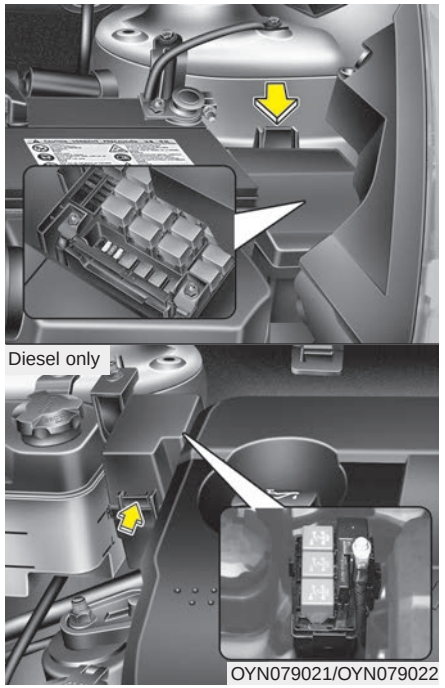
Diesel only

OYN079021/OYN079022

Engine compartment panel fuse replacement

1. Turn the ignition switch and all other switches off.
2. Remove the fuse box cover by pressing the tab and pulling up the cover.

YN ENG 7.QXP 4/16/2012 10:09 AM Page 55

3. Check the removed fuse; replace it if it is blown. To remove or insert the fuse, use the fuse puller in the engine compartment fuse panel.
4. Push in a new fuse of the same rating, and make sure it fits tightly in the clips. If it fits loosely, we recommend that you consult an authorized Kia dealer.

⚠ CAUTION

After checking the fuse panel in the engine compartment, securely install the fuse panel cover. If not, electrical failures may occur from water leaking in.

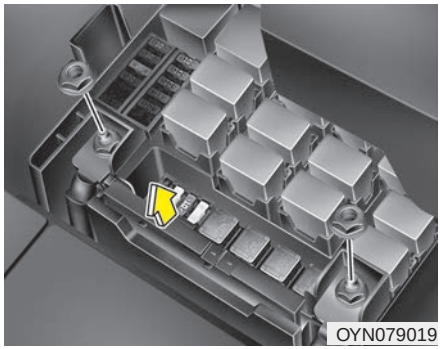

Main fuse

If the main fuse is blown, it must be removed as follows:

1. Disconnect the negative battery cable.
2. Remove the nuts shown in the picture above.
3. Replace the fuse with a new one of the same rating.
4. Reinstall in the reverse order of removal.

✻ NOTICE

If the main fuse is blown, we recommend that you consult an authorized Kia dealer.

YN ENG 7.QXP 4/16/2012 10:10 AM Page 56

Fuse/relay panel description

Inside the fuse/relay panel covers, you can find the fuse/relay label describing fuse/relay name and capacity.

Inner fuse panel



Engine compartment fuse panel

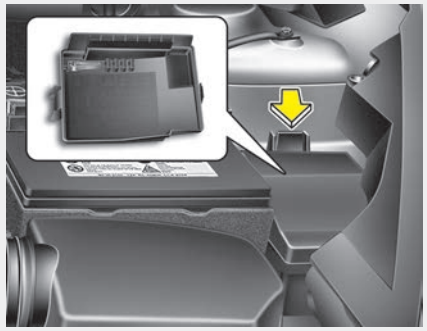

Diesel only

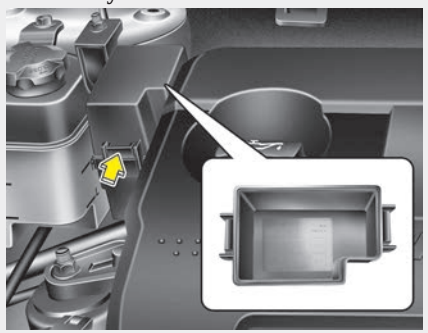

OYN079024/OYN079025/OYN079026

✻ NOTICE

Not all fuse panel descriptions in this manual may be applicable to your vehicle. It is accurate at the time of printing. When you inspect the fuse panel in your vehicle, refer to the fuse panel label.

YN ENG 7.QXP 4/16/2012 10:10 AM Page 57

Inner fuse panel

Description	Fuse rating	System	Protected Component
LH	25A	POWER WINDOW	Left Power Window
RH	25A	POWER WINDOW	Right Power Window
	10A	OUTSIDE MIRROR HEATED	Outside Mirror Defroster
2	10A	BLOWER	Air Conditioning System, ECU
	20A	DOOR LOCK	Door Lock/Unlock
	20A	SUNROOF	Sunroof
SAFETY	15A	SAFETY POWER WINDOW	Safety Power Window (Driver)
	10A	FOLDING MIRROR	Outside Mirror Folding Switch, Center Facia Switch
LH	10A	TAIL LAMP	Left Tail Light
RH	10A	TAIL LAMP	Right Tail Light
	10A	START	Start Motor Relay
	15A	HAZARD WARNING SIGNAL	Center Facia Switch
1	25A	POWER DISTRIBUTION MODULE	Smk Unit
2	10A	POWER DISTRIBUTION MODULE	Smk Unit, SSB
MDPS2	10A	MOTOR DRIVER POWER STEERING	MDPS
BRAKE SW	10A	STOP SWITCH	STOP SWITCH

YN ENG 7.QXP 4/16/2012 10:10 AM Page 58

Description	Fuse rating	System	Protected Component
	15A	TRANSMISSION CONTROL UNIT	Speed In Sensor, Speed Out Sensor, Speed Sensor, Inhibitor Switch
IGN COIL	15A	IGNITION COIL	Ignition Coil, Condensor
IG2	10A	IGNITION	HLLD Switch, HLLD Actuator, BCM, Air Conditioning System, Sunroof
	25A	WINDSCREEN WIPING SYSTEM (CONTINUOUS)	Front Wiper Motor Relay, Multi Function Switch Wiper
	10A	FRONT FOG LAMP	Front Fog Lamp, BCM
	10A	REAR FOG LAMP	Rear Fog Lamp, BCM
	10A	ROOM LAMP	Room Lamp Switch, MUT
STOP LP	15A	STOP LAMP	Stop Switch, BCM
CLUSTER	10A	CLUSTER	Cluster, BCM, Digtal Clock
IG1	10A	IGNITION	Audio,TPMS, Center Facia Switch
	10A	ANTI-LOCK BRAKE SYSTEM	Yaw Rate Sensor, ABS(ESP),ESP Switch
B/UP LP	10A	B/UP LP	Back Up Switch
	10A	ELECTRONIC (ENGINE) CONTROL UNIT	ECU, AFS
RAIN SENSOR <PTC>	10A	RAIN SENSOR (PTC HEATER)	Rain Sensor Relay (PTC, Fuel Filter Heater)
	10A	POWER DISTRIBUTION MODULE	Smart key Unit, SSB

YN ENG 7.QXP 4/16/2012 10:10 AM Page 59

Description	Fuse rating	System	Protected Component
	15A	FRONT HEAT RAYS JOIN GLASS	Front Deicer, BCM
POWER OUTLET FRT	15A	POWER OUTLET	Front Power Outlet
POWER OUTLET RR	25A	POWER OUTLET	Rear Power Outlet, Center Power Outlet
ACC	10A	IGNITION	Audio, Digtal Clock
IND 	10A	AIR BAG INDICATOR	Cluster (Air Bag Indicator)
	10A	AIR BAG	ACU
	10A	DIRECTION INDICATOR TURN SIGNAL LAMP	Multi Function Switch Light
IND 	10A	HEADLAMP HI INDICATOR	Cluster
	15A	WIPER SYSTEM RR	Rear Wiper Motor, Rain Sensor, Multi Function Switch Wiper
	15A	SEAT HEATER	Center Facia Switch
AUDIO	20A	AUDIO	Audio
LUGGAGE LP	10A	LUGGAGE LP	Luggage Lamp

YN ENG 7.QXP 4/16/2012 10:10 AM Page 60

Engine compartment fuse panel

Description	Fuse rating	System	Protected Component
IG2	50A	IGNITION	Start Sol, IGN_SW
B+1 	50A	BATTERY	I/P Junction(Stop Lamp 15A,Tail Lamp Relay, Room Lamp, Luggage 10A,Tail Lamp LH 10A, Tail Lamp RH 10A, FOG LP FRT 10A, FOG LP RR 10A)
	30A	FUEL FILTER HEATER	Fuel Filter Heater (Diesel)
ALT	125A/150A	ALTERNATOR	Alternator
1 	40A	ANTI-LOCK BRAKE SYSTEM	ABS,ESP
2 	40A	ANTI-LOCK BRAKE SYSTEM	ABS,ESP
RR HTD	40A	REAR HEAT RAYS JOIN GLASS	I/P Junction(Rear Heater Relay, Heated Mirror 10A)
1 	40A	BLOWER	Blower Motor
MDPS 1	80A	MOTOR DRIVEN POWER STEERING	MDPS(Motor Driven Power Steering)
IG1	40A	IGNITION	Ignition Switch (IG1, Accessory)
	40A	COOLING FAN	Cooling Fan Relay(High), Cooling Fan Relay(Low)
2 	30A	ELECTRONIC (ENGINE) CONTROL UNIT	"Main Relay, ECU 4 10A, ECU 1 20A, ECU 3 10A, Sensor 10A, Injector 15A"
B+2 	50A	BATTERY	"I/P Junction(Hazard 15A, Power Window Relay, Power window LH 25A, Power window RH 25A ,Safety Power window 15A, Sunroof 20A, PDM 3 10A, Deicer 15A, Folding 10A, PDM1 25A, Door Lock 20A)"
	10A	DAYTIME RUNNING LIGHT	BCM

YN ENG 7.QXP 4/16/2012 10:10 AM Page 61

Description	Fuse rating	System	Protected Component
	20A	HEADLAMP HIGH BEAMS	Headlamp High Beam
	10A	HORN	Horn, Burglar Alarm Horn, Battery Sensor
	20A	HEADLAMP DIPPED BEAMS	Headlamp Low Beam
F/PUMP	20A	FUEL PUMP	Fuel Pump Relay (Gasoline)
 AIR HTR	10A	ELECTRONIC (ENGINE) CONTROL UNIT/AIR HTR	ECU
INJECTOR	15A	INJECTOR	INJECTOR (GASOLINE) E-EGR, WGT, CPS (DIESEL)
SENSOR	10A	SENSOR	AIR CONDITIONING RELAY, STOP SW, COOLING FAN RELAY (HIGH), COOLING FAN RELAY (LOW)
B/UP LP 2	10A	B/UP LP	RR COMBI LP, ECM MIRROR
	10A	AIR CONDITIONER	Air Conditioning Relay
	10A	HEADLAMP DIPPED BEAMS	Cluster(Low Indicator), Head Lamp Low LH
	20A	ELECTRONIC(ENGINE) CONTROL UNIT	ECU
	10A	HEADLAMP DIPPED BEAMS	Head Lamp Low RH
	10A	ELECTRONIC(ENGINE) CONTROL UNIT	ECU, TCU, GLOW Relay
	10A	RAIN SENSOR	RAIN SENSOR

YN ENG 7.QXP 4/16/2012 10:10 AM Page 62

Engine compartment fuse panel (Diesel engine only)

Description	Fuse rating	System	Protected Component
PTC 1	50A	PTC Heater 1	PTC Heater 1
PTC 2	50A	PTC Heater 2	PTC Heater 2
PTC 3	50A	PTC Heater 3	PTC Heater 3
	80A	GLOW Plug	GLOW Plug

YN ENG 7.QXP 4/16/2012 10:10 AM Page 63

LIGHT BULBS

⚠ WARNING - Working on the lights

Prior to working on the light, firmly apply the parking brake, ensure that the ignition switch is turned to the LOCK position and turn off the lights to avoid sudden movement of the vehicle and burning your fingers or receiving an electric shock.

Use only the bulbs of the specified wattage.

⚠ CAUTION

Be sure to replace the burned-out bulb with one of the same wattage rating. Otherwise, it may cause damage to the fuse or electric wiring system.

⚠ CAUTION

If you don't have necessary tools, the correct bulbs and the expertise, we recommend that you consult an authorized Kia dealer. In many cases, it is difficult to replace vehicle light bulbs because other parts of the vehicle must be removed before you can get to the bulb. This is especially true if you have to remove the headlight assembly to get to the bulb(s). Removing /installing the headlight assembly can result in damage to the vehicle.

✻ NOTICE

After heavy, driving rain or washing, headlight and taillight lenses could appear frosty. This condition is caused by the temperature difference between the lamp inside and outside. This is similar to the condensation on your windows inside your vehicle during the rain and doesn't indicate a problem with your vehicle. If the water leaks into the lamp bulb circuitry, we recommend that the system be checked by an authorized Kia dealer.



Headlight, position light, turn signal light, front fog light bulb replacement

(1) Headlight (Low)
(2) Headlight (High)
(3) Position light
(4) Front turn signal light
(5) Front fog light (if equipped)

* The actual lamp in the vehicle may differ from the illustration.

YN ENG 7.QXP 4/16/2012 10:10 AM Page 64

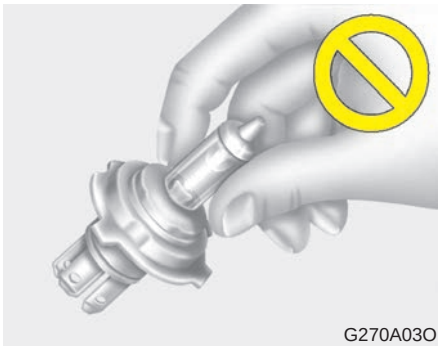
G270A03O

Headlight bulb

⚠ WARNING - Halogen bulbs

- **Halogen bulbs contain pressurized gas that will produce flying pieces of glass if broken.**
- **Always handle them carefully, and avoid scratches and abrasions. If the bulbs are lit, avoid contact with liquids. Never touch the glass with bare hands. Residual oil may cause the bulb to overheat and burst when lit. A bulb should be operated only when installed in a headlight.**

(Continued)

(Continued)

- **If a bulb becomes damaged or cracked, replace it immediately and carefully dispose of it.**
- **Wear eye protection when changing a bulb. Allow the bulb to cool down before handling it.**

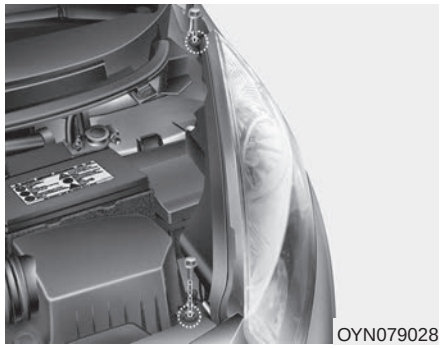
OYN079028

1. Open the hood.
2. Loosen the retaining bolts and remove the headlight assembly from the body of the vehicle.
3. Disconnect the power connector from the back of the headlight assembly.

YN ENG 7.QXP 4/16/2012 10:10 AM Page 65

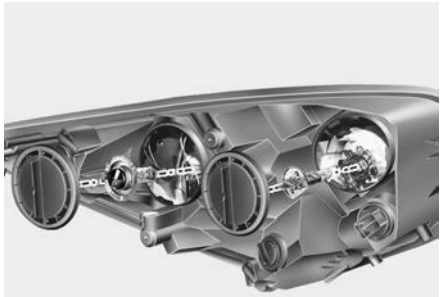

OYN079029

4. Remove the headlight bulb cover by turning it counterclockwise.
5. Disconnect the headlight bulb socket-connector.
6. Unsnap the headlight bulb retaining wire by depressing the end and pushing it upward. (if equipped)
7. Remove the bulb from the headlight assembly.
8. Install a new headlight bulb and snap the headlight bulb retaining wire into position by aligning the wire with the groove on the bulb.
9. Connect the headlight bulb socket connector.
10. Install the headlight bulb cover by turning it clockwise.
11. Connect the power connector to the back of the headlight assembly.
12. Reinstall the headlight assembly to the body of the vehicle.

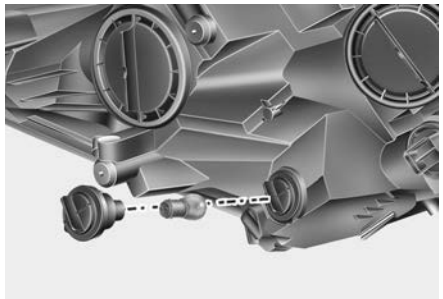

OYN079050

Turn signal light

1. Remove the headlight assembly from the body of the vehicle.
2. Remove the socket from the assembly by turning the socket counterclockwise until the tabs on the socket align with the slots on the assembly.
3. Remove the bulb from the socket by pressing it in and rotating it counterclockwise until the tabs on the bulb align with the slots in the socket. Pull the bulb out of the socket
4. Insert a new bulb by inserting it into the socket and rotating it until it locks into place.

YN ENG 7.QXP 4/16/2012 10:10 AM Page 66

5. Install the socket in the assembly by aligning the tabs on the socket with the slots in the assembly. Push the socket into the assembly and turn the socket clockwise.
6. Reinstall the headlight assembly to the body of the vehicle.

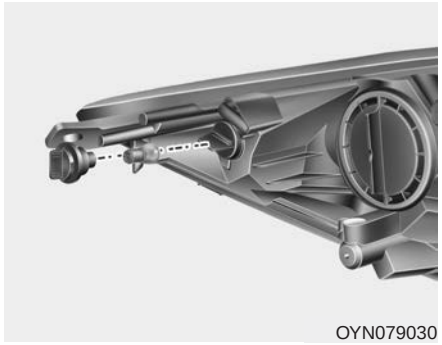

OYN079030

Position light

1. Remove the headlight assembly from the body of the vehicle.
2. Remove the cover by turning it counterclockwise.
3. Remove the socket from the assembly.
4. Remove the bulb from the socket by pulling straight out.
5. Insert a new bulb.
6. Install the socket in the assembly.
7. Install the cover turning it clockwise.
8. Reinstall the headlight assembly to the body of the vehicle.

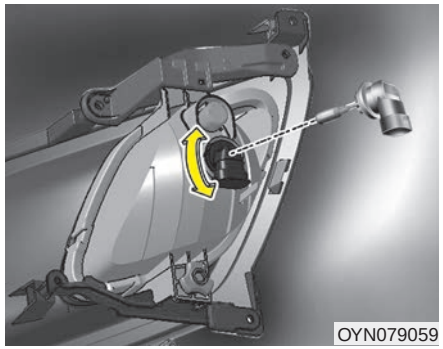

OYN079059

Front fog light bulbs (if equipped)

1. Remove the front bumper under cover.
2. Reach your hand into the back of the front bumper.
3. Disconnect the power connector from the socket.
4. Remove the bulb-socket from the housing by turning the socket counter clockwise until the tabs on the socket align with the slots on the housing.
5. Install the new bulb-socket into the housing by aligning the tabs on the socket with the slots in the housing. Push the socket into the housing and turn the socket clockwise.
6. Connect the power connector to the socket.
7. Reinstall the front bumper under cover.

YN ENG 7.QXP 4/16/2012 10:10 AM Page 67

✻ NOTICE

If the headlight aiming adjustment is necessary after the headlight assembly is reinstalled, we recommend that you consult an authorized Kia dealer.

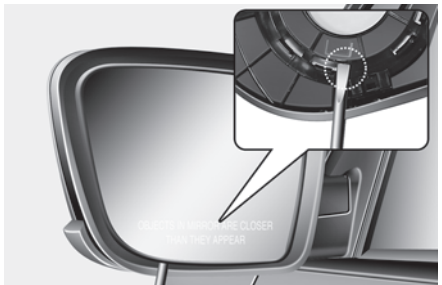

Side repeater light bulb replacement (if equipped)

Type A

1. Using a flat-blade screwdriver, gently pry the mirror from the assembly.



2. Remove the socket from the housing.
3. Remove the bulb from the socket.
4. Insert a new bulb into the socket.
5. Reinstall the assembly in the reverse order of removal.

YN ENG 7.QXP 4/16/2012 10:10 AM Page 68

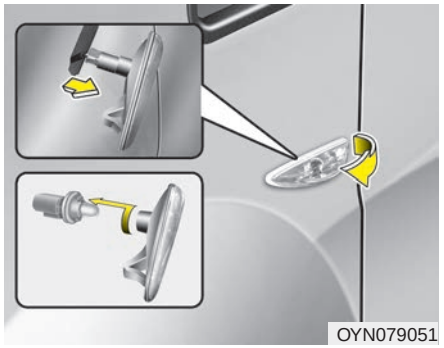
OYN079051

Type B

1. Remove the light assembly from the vehicle by pushing the lens forward and pulling the assembly out.
2. Disconnect the bulb electrical connector.
3. Separate the socket and the lens parts by turning the socket counter clockwise until the tabs on the socket align with the slots on the lens part.
4. Remove the bulb by pulling it straight out.
5. Insert a new bulb in the socket.
6. Reassemble the socket and the lens part.
7. Connect the bulb electrical connector.
8. Reinstall the light assembly to the body of the vehicle.

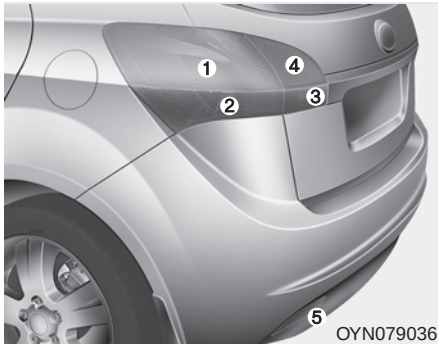

OYN079036

Rear combination light bulb replacement

(1) Stop and tail light
(2) Rear turn signal light
(3) Back-up light
(4) Tail light
(5) Rear fog light (if equipped)

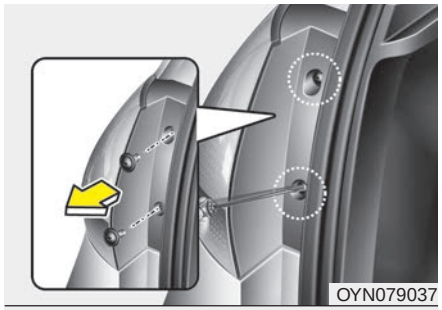
OYN079037

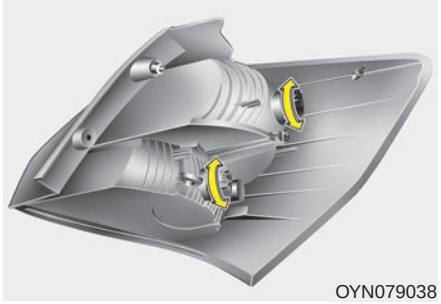
OYN079038

1. Open the tailgate.
2. **Outside**

   Loosen the outside light assembly retaining screws with a cross-tip screwdriver.

YN ENG 7.QXP 4/16/2012 10:11 AM Page 69

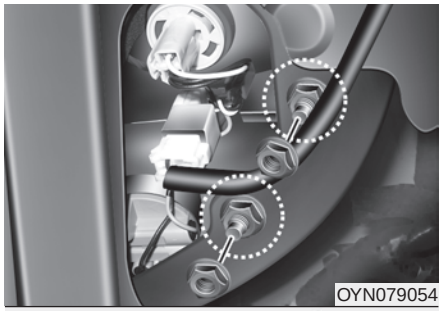
OYN079054

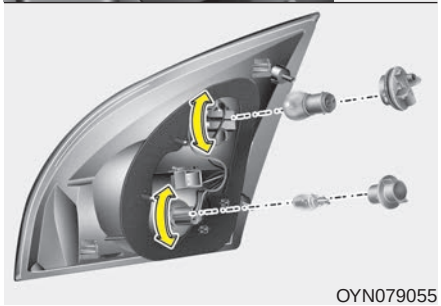
OYN079055

Inside

2-1. Loosen the light assembly retaining nuts.
2-2. Remove the tailgate trim by removing the screws.
2-3. Remove the inside light assembly by removing the nuts.
3. Remove the rear combination light assembly from the body of the vehicle.
4. Remove the socket from the assembly by turning the socket counterclockwise until the tabs on the socket align with the slots on the assembly.
5. Remove the bulb from the socket.
6. Insert a new bulb by inserting it into the socket and pushing or rotating it until it locks into place.
7. Install the socket in the assembly by aligning the tabs on the socket with the slots in the assembly. Push the socket into the assembly and turn the socket clockwise.
8. Reinstall the light assembly to the body of the vehicle.
9. Tighten the screws.

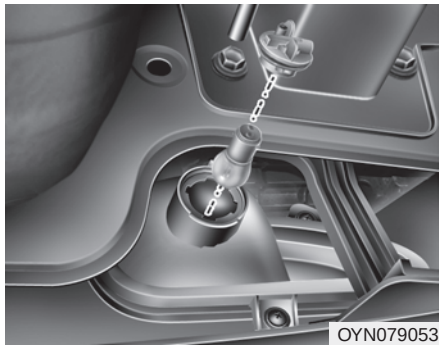
OYN079053

Rear fog light (if equipped)

1. Remove the socket from the assembly by turning the socket counterclockwise until the tabs on the socket align with the slots on the assembly.
2. Remove the bulb from the socket by pressing it in and rotating it counterclockwise until the tabs on the bulb align with the slots in the socket. Pull the bulb out of the socket.
3. Insert a new bulb in the socket.
4. Reinstall the light assembly to the body of the vehicle.

YN ENG 7.QXP 4/16/2012 10:11 AM Page 70

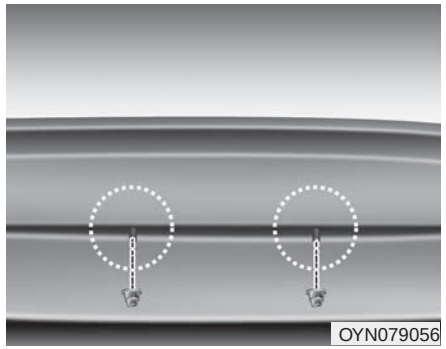
OYN079056

High mounted stop light replacement (if equipped)

1. Open the tailgate.
2. Loosen the light assembly retaining nuts.

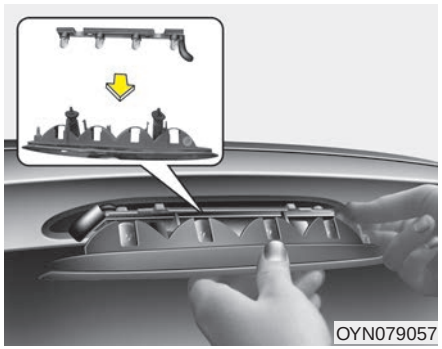
OYN079057

3. Remove the light assembly and disconnect the bulb electrical connector.
4. Remove the socket from the assembly.
5. Remove the bulb from the socket by pulling it.
6. Install a new bulb in the socket.
7. Reinstall the light assembly in the reverse order of removal.

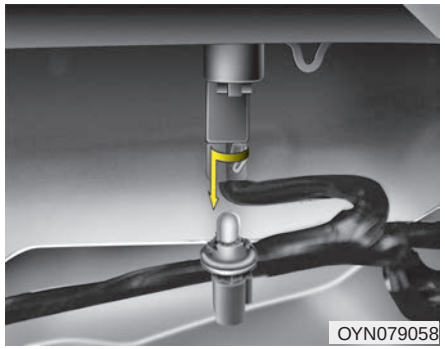
OYN079058

License plate light bulb replacement

1. Open the tailgate.
2. Remove the tailgate trim by removing the screws.
3. Remove the lens by pushing the cover.
4. Remove the bulb by pulling it straight out.
5. Install a new bulb.
6. Reinstall the lens securely.

YN ENG 7.QXP 4/16/2012 10:11 AM Page 71

Front map lamp

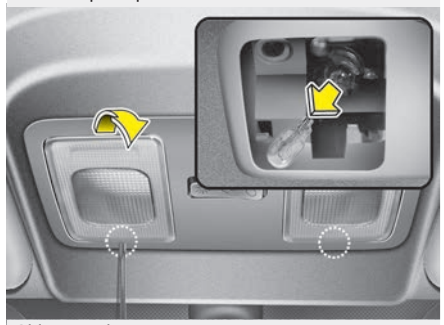

Side room lamp

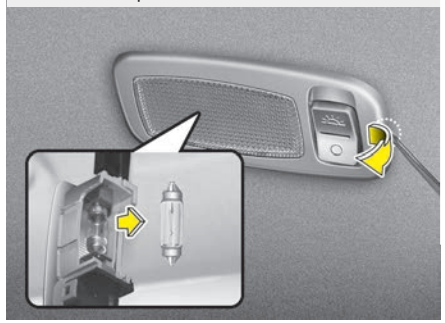

OYN079046/OYN079047

Glove box lamp

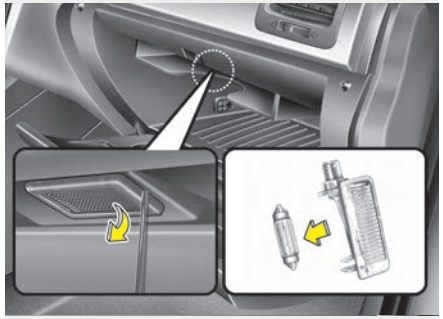

Luggage room lamp

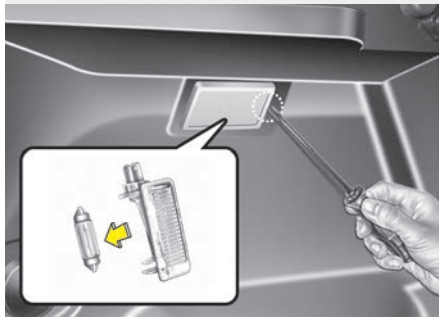

OYN079052/OYN079049

Interior light bulb replacement

1. Using a flat-blade screwdriver, gently pry the lens from the interior light housing.
2. Remove the bulb by pulling it straight out.

⚠ WARNING

Prior to working on the Interior Lights, ensure that the "OFF" button is depressed to avoid burning your fingers or receiving an electric shock.

3. Install a new bulb in the socket.
4. Align the lens tabs with the interior light housing notches and snap the lens into place.

⚠ CAUTION

Use care not to dirty or damage lens, lens tab, and plastic housings.

YN ENG 7.QXP 4/16/2012 10:11 AM Page 72

APPEARANCE CARE

Exterior care

Exterior general caution

It is very important to follow the label directions when using any chemical cleaner or polish. Read all warning and caution statements that appear on the label.

Finish maintenance

Washing

To help protect your vehicle's finish from rust and deterioration, wash it thoroughly and frequently at least once a month with lukewarm or cold water.

If you use your vehicle for off-road driving, you should wash it after each off-road trip. Pay special attention to the removal of any accumulation of salt, dirt, mud, and other foreign materials. Make sure the drain holes in the lower edges of the doors and rocker panels are kept clear and clean.

Insects, tar, tree sap, bird droppings, industrial pollution and similar deposits can damage your vehicle's finish if not removed immediately.

Even prompt washing with plain water may not completely remove all these deposits. A mild soap, safe for use on painted surfaces, may be used.

After washing, rinse the vehicle thoroughly with lukewarm or cold water. Do not allow soap to dry on the finish.

⚠ CAUTION

- ***Do not use strong soap, chemical detergents or hot water, and do not wash the vehicle in direct sunlight or when the body of the vehicle is warm.***
- ***Be careful when washing the side windows of your vehicle. Especially, with high-pressure water, water may leak through the windows and wet the interior.***
- ***To prevent damage to the plastic parts and lamps, do not clean with chemical solvents or strong detergents.***

⚠ WARNING - Wet brakes

After washing the vehicle, test the brakes while driving slowly to see if they have been affected by water. If braking performance is impaired, dry the brakes by applying them lightly while maintaining a slow forward speed.

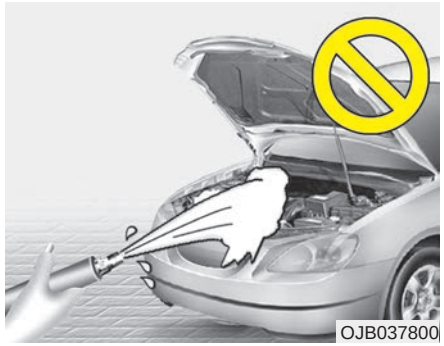
OJB037800

⚠ CAUTION

- ***Water washing in the engine compartment including high pressure water washing may cause the failure of electrical circuits located in the engine compartment.***
- ***Never allow water or other liquids to come in contact with electrical/electronic components inside the vehicle as this may damage them.***

YN ENG 7.QXP 4/16/2012 10:11 AM Page 73

Waxing

Wax the vehicle when water will no longer bead on the paint.

Always wash and dry the vehicle before waxing. Use a good quality liquid or paste wax, and follow the manufacturer's instructions. Wax all metal trim to protect it and to maintain its luster.

Removing oil, tar, and similar materials with a spot remover will usually strip the wax from the finish. Be sure to re-wax these areas even if the rest of the vehicle does not yet need waxing.

⚠ CAUTION

- ***Wiping dust or dirt off the body with a dry cloth will scratch the finish.***
- ***Do not use steel wool, abrasive cleaners, or strong detergents containing highly alkaline or caustic agents on chrome-plated or anodized aluminum parts. This may result in damage to the protective coating and cause discoloration or paint deterioration.***

Finish damage repair

Deep scratches or stone chips in the painted surface must be repaired promptly. Exposed metal will quickly rust and may develop into a major repair expense.

✻ NOTICE

If your vehicle is damaged and requires any metal repair or replacement, be sure the body shop applies anti-corrosion materials to the parts repaired or replaced.

Bright-metal maintenance

- To remove road tar and insects, use a tar remover, not a scraper or other sharp object.
- To protect the surfaces of bright-metal parts from corrosion, apply a coating of wax or chrome preservative and rub to a high luster.
- During winter weather or in coastal areas, cover the bright metal parts with a heavier coating of wax or preservative. If necessary, coat the parts with non-corrosive petroleum jelly or other protective compound.

YN ENG 7.QXP 4/16/2012 10:11 AM Page 74

Underbody maintenance

Corrosive materials used for ice and snow removal and dust control may collect on the underbody. If these materials are not removed, accelerated rusting can occur on the underbody parts such as the fuel lines, frame, floor pan and exhaust system, even though they have been treated with rust protection.

Thoroughly flush the vehicle underbody and wheel openings with lukewarm or cold water once a month, after off-road driving and at the end of each winter. Pay special attention to these areas because it is difficult to see all the mud and dirt. It will do more harm than good to wet down the road grime without removing it. The lower edges of the doors, rocker panels, and frame members have drain holes that should not clog with dirt; trapped water in these areas can cause rusting.

⚠ WARNING

After washing the vehicle, test the brakes while driving slowly to see if they have been affected by water. If braking performance is impaired, dry the brakes by applying them lightly while maintaining a slow forward speed.

Aluminum or chrome wheel maintenance

The aluminum or chrome wheels are coated with a clear protective finish.

- Do not use any abrasive cleaner, polishing compound, solvent, or wire brushes on aluminum or chrome wheels. They may scratch or damage the finish.
- Clean the wheel when it has cooled.
- Use only a mild soap or neutral detergent, and rinse thoroughly with water. Also, be sure to clean the wheels after driving on salted roads. This helps prevent corrosion.
- Avoid washing the wheels with high-speed car wash brushes.
- Do not use any alkaline or acid detergent. It may damage and corrode the aluminum or chrome wheels coated with a clear protective finish.

YN ENG 7.QXP 4/16/2012 10:11 AM Page 75

Corrosion protection

Protecting your vehicle from corrosion

By using the most advanced design and construction practices to combat corrosion, we produce vehicles of the highest quality. However, this is only part of the job. To achieve the long-term corrosion resistance your vehicle can deliver, the owner's cooperation and assistance is also required.

Common causes of corrosion

The most common causes of corrosion on your vehicle are:

- Road salt, dirt and moisture that is allowed to accumulate underneath the vehicle.
- Removal of paint or protective coatings by stones, gravel, abrasion or minor scrapes and dents which leave unprotected metal exposed to corrosion.

High-corrosion areas

If you live in an area where your vehicle is regularly exposed to corrosive materials, corrosion protection is particularly important. Some of the common causes of accelerated corrosion are road salts, dust control chemicals, ocean air and industrial pollution.

Moisture breeds corrosion

Moisture creates the conditions in which corrosion is most likely to occur. For example, corrosion is accelerated by high humidity, particularly when temperatures are just above freezing. In such conditions, the corrosive material is kept in contact with the vehicle's surface by moisture that slowly evaporates.

Mud is particularly corrosive because it dries slowly and holds moisture in contact with the vehicle. Although the mud appears to be dry, it can still retain moisture and promote corrosion.

High temperatures can also accelerate corrosion of parts that are not properly ventilated so the moisture can be dispersed. For all these reasons, it is particularly important to keep your vehicle clean and free of mud or accumulations of other materials. This applies not only to the visible surfaces but particularly to the underside of the vehicle.

YN ENG 7.QXP 4/16/2012 10:11 AM Page 76

To help prevent corrosion

You can help prevent corrosion from getting started by observing the following:

Keep your vehicle clean

The best way to prevent corrosion is to keep your vehicle clean and free of corrosive materials. Attention to the underside of the vehicle is particularly important.

- If you live in a high-corrosion area — where road salts are used, near the ocean, areas with industrial pollution, acid rain, etc.—, you should take extra care to prevent corrosion. In winter, hose off the underside of your vehicle at least once a month and be sure to clean the underside thoroughly when winter is over.
- When cleaning underneath the vehicle, give particular attention to the components under the fenders and other areas that are hidden from view. Do a thorough job; just dampening the accumulated mud rather than washing it away will accelerate corrosion rather than prevent it. Water under high pressure and steam are particularly effective in removing accumulated mud and corrosive materials.
- When cleaning lower door panels, rocker panels and frame members, be sure that drain holes are kept open so that moisture can escape and not be trapped inside to accelerate corrosion.

Keep your garage dry

Don't park your vehicle in a damp, poorly ventilated garage. This creates a favorable environment for corrosion. This is particularly true if you wash your vehicle in the garage or drive it into the garage when it is still wet or covered with snow, ice or mud. Even a heated garage can contribute to corrosion unless it is well ventilated so moisture is dispersed.

Keep paint and trim in good condition

Scratches or chips in the finish should be covered with "touch-up" paint as soon as possible to reduce the possibility of corrosion. If bare metal is showing through, the attention of a qualified body and paint shop is recommended.

Bird droppings : Bird droppings are highly corrosive and may damage painted surfaces in just a few hours. Always remove bird droppings as soon as possible.

Don't neglect the interior

Moisture can collect under the floor mats and carpeting and cause corrosion. Check under the mats periodically to be sure the carpeting is dry. Use particular care if you carry fertilizers, cleaning materials or chemicals in the vehicle.

These should be carried only in proper containers and any spills or leaks should be cleaned up, flushed with clean water and thoroughly dried.

YN ENG 7.QXP 4/16/2012 10:11 AM Page 77

Interior care

Interior general precautions

Prevent chemicals such as perfume, cosmetic oil, sun cream, hand cleaner, and air freshener from contacting the interior parts because they may cause damage or discoloration. If they do contact the interior parts, wipe them off immediately.

See the instructions that follow for the proper way to clean vinyl.

⚠ CAUTION

Never allow water or other liquids to come in contact with electrical/electronic components inside the vehicle as this may damage them.

⚠ CAUTION

When cleaning leather products (steering wheel, seats etc.), use neutral detergents or low alcohol content solutions. If you use high alcohol content solutions or acid/alkaline detergents, the color of the leather may fade or the surface may get stripped off.

Cleaning the upholstery and interior trim

Vinyl

Remove dust and loose dirt from vinyl with a whisk broom or vacuum cleaner. Clean vinyl surfaces with a vinyl cleaner.

Fabric

Remove dust and loose dirt from fabric with a whisk broom or vacuum cleaner. Clean with a mild soap solution recommended for upholstery or carpets. Remove fresh spots immediately with a fabric spot cleaner. If fresh spots do not receive immediate attention, the fabric can be stained and its color can be affected. Also, its fire-resistant properties can be reduced if the material is not properly maintained.

⚠ CAUTION

Using anything but recommended cleaners and procedures may affect the fabric's appearance and fire-resistant properties.

Cleaning the lap/shoulder belt webbing

Clean the belt webbing with any mild soap solution recommended for cleaning upholstery or carpet. Follow the instructions provided with the soap. Do not bleach or re-dye the webbing because this may weaken it.

Cleaning the interior window glass

If the interior glass surfaces of the vehicle become fogged (that is, covered with an oily, greasy or waxy film), they should be cleaned with glass cleaner. Follow the directions on the glass cleaner container.

⚠ CAUTION

Do not scrape or scratch the inside of the rear window. This may result in damage to the rear window defroster grid.

YN ENG 7.QXP 4/16/2012 10:11 AM Page 78

EMISSION CONTROL SYSTEM

The emission control system of your vehicle is covered by a written limited warranty. Please see the warranty information contained in the Warranty & Maintenance booklet in your vehicle.

Your vehicle is equipped with an emission control system to meet all emission regulations.

There are three emission control systems which are as follows.

(1) Crankcase emission control system
(2) Evaporative emission control system
(3) Exhaust emission control system

In order to assure the proper function of the emission control systems, it is recommended that you have your vehicle inspected and maintained by an authorized Kia dealer in accordance with the maintenance schedule in this manual.

Caution for the Inspection and Maintenance Test (With Electronic Stability Program (ESP) system)

- **To prevent the vehicle from misfiring during dynamometer testing, turn the Electronic Stability Program (ESP) system off by pressing the ESP switch.**
- **After dynamometer testing is completed, turn the ESP system back on by pressing the ESP switch again.**

1. Crankcase emission control system

The positive crankcase ventilation system is employed to prevent air pollution caused by blow-by gases being emitted from the crankcase. This system supplies fresh filtered air to the crankcase through the air intake hose. Inside the crankcase, the fresh air mixes with blow-by gases, which then pass through the PCV valve into the induction system.

2. Evaporative emission control system

The Evaporative Emission Control System is designed to prevent fuel vapors from escaping into the atmosphere.

YN ENG 7.QXP 4/16/2012 10:11 AM Page 79

Canister

Fuel vapors generated inside the fuel tank are absorbed and stored in the onboard canister. When the engine is running, the fuel vapors absorbed in the canister are drawn into the surge tank through the purge control solenoid valve.

Purge Control Solenoid Valve (PCSV)

The purge control solenoid valve is controlled by the Engine Control Module (ECM); when the engine coolant temperature is low during idling, the PCSV closes so that evaporated fuel is not taken into the engine. After the engine warms up during ordinary driving, the PCSV opens to introduce evaporated fuel to the engine.

3. Exhaust emission control system

The Exhaust Emission Control System is a highly effective system which controls exhaust emissions while maintaining good vehicle performance.

Vehicle modifications

- This vehicle should not be modified. Modification of your vehicle could affect its performance, safety or durability and may even violate governmental safety and emissions regulations.

  In addition, damage or performance problems resulting from any modification may not be covered under warranty.
- If you use unauthorized electric devices, it may cause the vehicle to operate abnormally, wire damage, battery discharge and fire. For your safety, do not use unauthorized electric devices.

Engine exhaust gas precautions (carbon monoxide)

- Carbon monoxide can be present with other exhaust fumes. Therefore, if you smell exhaust fumes of any kind inside your vehicle, have it inspected and repaired immediately. If you ever suspect exhaust fumes are coming into your vehicle, drive it only with all the windows fully open. Have your vehicle checked and repaired immediately.

⚠ WARNING - Exhaust

Engine exhaust gases contain carbon monoxide (CO). Though colorless and odorless, it is dangerous and could be lethal if inhaled. Follow the instructions on this page to avoid CO poisoning.

YN ENG 7.QXP 4/16/2012 10:11 AM Page 80

- Do not operate the engine in confined or closed areas (such as garages) any more than what is necessary to move the vehicle in or out of the area.
- When the vehicle is stopped in an open area for more than a short time with the engine running, adjust the ventilation system (as needed) to draw outside air into the vehicle.
- Never sit in a parked or stopped vehicle for any extended time with the engine running.
- When the engine stalls or fails to start, excessive attempts to restart the engine may cause damage to the emission control system.

Operating precautions for catalytic converters (if equipped)

⚠ WARNING - Fire

- **A hot exhaust system can ignite flammable items under your vehicle. Do not park, idle, or drive the vehicle over or near flammable objects, such as grass, vegetation, paper, leaves, etc.**
- **The exhaust system and catalytic system are very hot while the engine is running or immediately after the engine is turned off. Keep away from the exhaust system and catalytic, you may get burned. Also, do not remove the heat sink around the exhaust system, do not seal the bottom of the vehicle or do not coat the vehicle for corrosion control. It may present a fire risk under certain conditions.**

Your vehicle is equipped with a catalytic converter emission control device.

Therefore, the following precautions must be observed:

- Use only UNLEADED FUEL for gasoline engine.
- Do not operate the vehicle when there are signs of engine malfunction, such as misfire or a noticeable loss of performance.
- Do not misuse or abuse the engine. Examples of misuse are coasting with the ignition off and descending steep grades in gear with the ignition off.
- Do not operate the engine at high idle speed for extended periods (5 minutes or more).
- Do not modify or tamper with any part of the engine or emission control system. We recommend that the system be inspected by an authorized Kia dealer.
- Avoid driving with a extremely low fuel level. Running out of fuel could cause the engine to misfire, damaging the catalytic converter.

Failure to observe these precautions could result in damage to the catalytic converter and to your vehicle. Additionally, such actions could void your warranties.

YN ENG 7.QXP 4/16/2012 10:11 AM Page 81

Diesel Particulate Filter (if equipped)

The Diesel Particulate Filter (DPF) system removes the soot emitted from the vehicle.

Unlike a disposable air filter, the DPF system automatically burns (oxidizes) and removes the accumulated soot according to the driving condition. In other words, the active burning by engine control system and high exhaust gas temperature caused by normal/high driving condition burns and removes the accumulated soot.

However, if the vehicle continues to be driven at low speed for long time, the accumulated soot may not be automatically removed because of low exhaust gas temperature. In this particular case, the amount of soot is out of detection limit, the soot oxidation process by engine control system may not happen and the malfunction indicator light may blink.

When the malfunction indicator light blinks, it may stop blinking by driving the vehicle at more than 60km/h (37 mph) or at more than second gear with 1500 ~ 2000 engine rpm for a certain time (for about 25 minutes).

If the malfunction indicator light continues to be blinked in spite of the procedure, we recommend that the system be checked by an authorized Kia dealer.

If you continue to drive with the malfunction indicator light blinking for a long time, the DPF system can be damaged and fuel consumption can be worsen.

CAUTION - Diesel Fuel (if equipped with DPF)

It is recommended to use the regulated automotive diesel fuel for diesel vehicle equipped with the DPF system.

If you use diesel fuel including high sulfur (more than 50 ppm sulfur) and unspecified additives, it can cause the DPF system to be damaged and white smoke can be emitted.

YN eng 8.QXP 19.9.2011 19:05 Page 1

Dimensions / 8-2
Bulb wattage / 8-2
Tires and wheels / 8-3
Recommended lubricants and capacities / 8-4
Vehicle identification number (VIN) / 8-7
Vehicle certification label / 8-7
Tire specification and pressure label / 8-8
Engine number / 8-8
Air conditioner compressor label / 8-9

Specifications & Consumer information 8

YN eng 8.QXP 19.9.2011 19:05 Page 2

DIMENSIONS

Item	mm (in)
Overall length	4068 (160.16)
Overall width	1765 (69.49)
Overall height	1600 (62.99)
Front tread	1553 (61.14)*1/1547 (60.91)*2/1541 (60.67)*3
Rear tread	1557 (61.30)*1/1551 (61.06)*2/1545 (60.83)*3
Wheelbase	2615 (102.95)

*1 Fitted with 195/65R15 tires.
*2 Fitted with 205/55R16 tires.
*3 Fitted with 205/50R17 tires.

BULB WATTAGE

Light Bulb		Wattage
Headlights	High	55
	Low	55
Front turn signal lights		21
Position lights		5
Side repeater lights (if equipped)		5
Front fog lights (if equipped)		27
Stop and tail lights		21/5
Tail lights		-
Rear turn signal lights		21
Back-up lights		16
Rear fog lights (if equipped)		21
High mounted stop light		5
License plate lights		5
Front map lamp		10
Side room lamp (if equipped)		5
Sunvisor lamp (if equipped)		5
Luggage room lamp		5
Glove box lamp		5

YN eng 8.QXP 19.9.2011 19:05 Page 3

TIRES AND WHEELS

Item	Tire size	Wheel size	Cold tire inflation pressure bar (psi,kPa)				Wheel lug nut torque kg•m (lb•ft, N•m)
			Normal load *1		Maximum load		
			Front	Rear	Front	Rear	
Full size tire	195/65R15	6.0J×15	2.2 (32, 220)	2.2 (32, 220)	2.5 (35, 250)	2.5 (35, 250)	9~11 (65~79, 88~107)
	205/55R16	6.0J×16					
	205/50R17	6.5J×17					
Compact spare tire (if equipped)	T125/80D15	4.0T×15	4.2 (60, 420)	4.2 (60, 420)	4.2 (60, 420)	4.2 (60, 420)	

* Normal load : Up to 2 persons

⚠ CAUTION

When replacing tires, use the same size originally supplied with the vehicle.

Using tires of a different size can damage the related parts or make it work irregularly.

YN eng 8.QXP 19.9.2011 19:05 Page 4

RECOMMENDED LUBRICANTS AND CAPACITIES

To help achieve proper engine and powertrain performance and durability, use only lubricants of the proper quality.
The correct lubricants also help promote engine efficiency that results in improved fuel economy.

Lubricant			Volume	Classification
Engine oil *1 *2 (drain and refill) Recommends - For Europe Shell HELIX Motor oils	Gasoline Engine		3.3 *l* (3.5 US qt.)	**For Europe** API Service SL or SM, ACEA A3 or above Use the engine oils approved by Kia Motors. Consult an authorized Kia dealer for details. **Except Europe** API Service SM*3, ILSAC GF-4 or above
	Diesel Engine		5.3 *l* (5.6 US qt.)	With DPF (Diesel Particulate filter) ; ACEA C3 Without DPF (Diesel Particulate filter) ; ACEA B4
Engine oil consumption	Normal driving condition		MAX. 1 *l* / 1,500 km	-
	Severe driving condition		MAX. 1 *l* / 1,000 km	-
Manual transaxle fluid	Gasoline Engine	1.4L	1.9 *l* ~ 2.0 *l* (2.0 ~ 2.1 US qt.)	API GL-4 SAE 75W-85 (fill for-life)
		1.6L	1.8 *l* ~ 1.9 *l* (1.9 ~ 2.0 US qt.)	
	Diesel Engine		1.9 *l* ~ 2.0 *l* (2.0 ~ 2.1 US qt.)	
Automatic transaxle fluid			6.8 *l* (7.2 US qt.)	DIAMOND ATF SP-III, SK ATF SP-III

*1 Refer to the recommended SAE viscosity numbers on the next page.

*2 Engine oils labeled Energy Conserving Oil are now available. Along with other additional benefits, they contribute to fuel economy by reducing the amount of fuel necessary to overcome engine friction. Often, these improvements are difficult to measure in everyday driving, but in a year's time, they can offer significant cost and energy savings.

*3 If the API service SM engine oil is not available in your country, you are able to use API service SL.

YN eng 8.QXP 19.9.2011 19:05 Page 5

Lubricant				Volume	Classification
Coolant	Gasoline Engine	1.4	MT	4.8 *l* (5.1 US qt.)	Ethylene glycol base for aluminum radiator
			AT	5.3 *l* (5.6 US qt.)	
		1.6	MT	4.8 *l* (5.1 US qt.)	
			AT	5.3 *l* (5.6 US qt.)	
	Diesel Engine	1.4	MT	6.4 ~ 6.5 *l* (6.8 ~ 6.9 US qt.)	
		1.6	MT	6.4 ~ 6.5 *l* (6.8 ~ 6.9 US qt.)	
Brake/Clutch fluid				0.7~0.8 *l* (0.7~0.8 US qt.)	FMVSS116 DOT-3 or DOT-4
Fuel				48 *l* (12.68 US gal)	Refer to “Fuel requirements” in section 1

YN eng 8.QXP 19.9.2011 19:05 Page 6

Recommended SAE viscosity number

⚠ CAUTION

Always be sure to clean the area around any filler plug, drain plug, or dipstick before checking or draining any lubricant. This is especially important in dusty or sandy areas and when the vehicle is used on unpaved roads. Cleaning the plug and dipstick areas will prevent dirt and grit from entering the engine and other mechanisms that could be damaged.

Engine oil viscosity (thickness) has an effect on fuel economy and cold weather operating (engine start and engine oil flowability). Lower viscosity engine oils can provide better fuel economy and cold weather performance, however, higher viscosity engine oils are required for satisfactory lubrication in hot weather. Using oils of any viscosity other than those recommended could result in engine damage.

When choosing an oil, consider the range of temperature your vehicle will be operated in before the next oil change. Proceed to select the recommended oil viscosity from the chart.

Temperature Range for SAE Viscosity Numbers

Temperature	°C	-30	-20	-10	0	10	20	30	40	50
	(°F)	-10	0	20	40	60	80	100	120	
Gasoline Engine Oil *1 (For Europe)		0W-40, 5W-30, 5W-40								
Gasoline Engine Oil *2 (Except Europe)		20W-50								
		15W-40								
		10W-30								
		5W-20*3, 5W-30								
Diesel Engine Oil *4		15W-40								
		10W-30								
		5W-30								
		0W-30								

*1 : For better fuel economy, it is recommended to use the engine oil of a viscosity grade SAE 0W-40, 5W-30, 5W-40 (API Service SL, SM / ACEA A3 or above).

*2 : For better fuel economy, it is recommended to use the engine oil of a viscosity grade SAE 5W-20,5W-30 (API SL, SM / ILSAC GF-3 or above). However, if the engine oil is not available in your country, select the proper engine oil using the engine oil viscosity chart.

*3 : In Middle East, do not use the engine oil of viscosity grade SAE 5W-20.

*4 : If your vehicle follows 30,000 km/ 1 year interval in normal maintenance schedule, use the engine oil of viscosity grade, SAE 5W-30.

YN eng 8.QXP 19.9.2011 19:05 Page 7

VEHICLE IDENTIFICATION NUMBER (VIN)

■ Type A

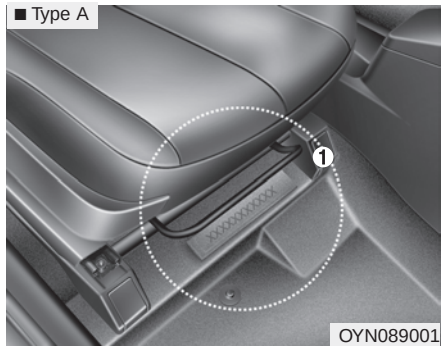

The vehicle identification number (VIN) is the number used in registering your car and in all legal matters pertaining to its ownership, etc.

The number is punched on the floor under the passenger seat. To check the number, remove the cover (1).

■ Type B

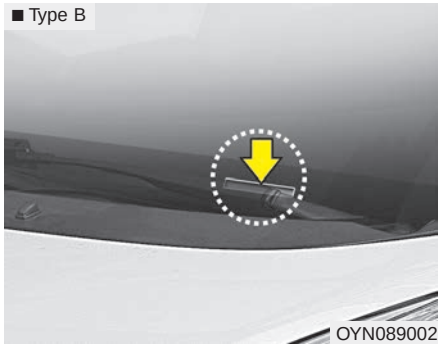

VIN label

The VIN is also on a plate attached to the top of the dashboard. The number on the plate can easily be seen through the windshield from outside.

VEHICLE CERTIFICATION LABEL (IF EQUIPPED)

■ Type A

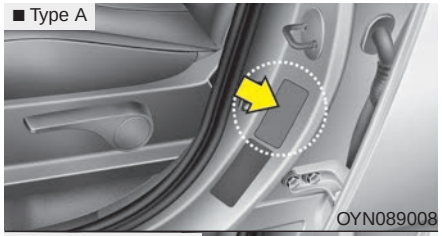

■ Type B (if equipped)

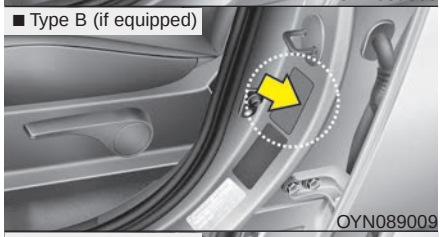

■ Type C (if equipped)

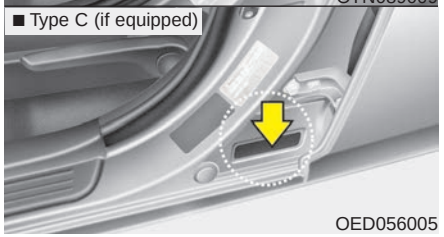

The vehicle certification label attached on the driver's (or front passenger's) side center pillar gives the vehicle identification number (VIN).

YN eng 8.QXP 19.9.2011 19:05 Page 8

TIRE SPECIFICATION AND PRESSURE LABEL

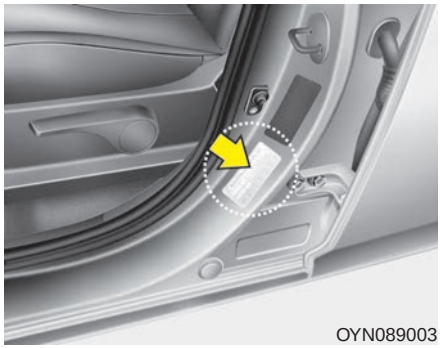

OYN089003

The tires supplied on your new vehicle are chosen to provide the best performance for normal driving.

The tire label located on the driver's side center pillar gives the tire pressures recommended for your car.

ENGINE NUMBER

Gasoline engine

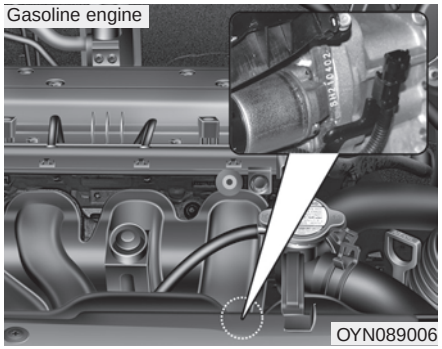

OYN089006

The engine number is stamped on the engine block as shown in the drawing.

Diesel engine

■ Type A

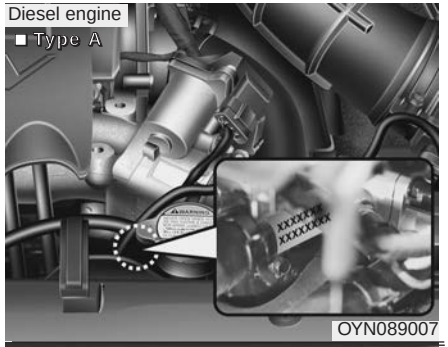

OYN089007

■ Type B

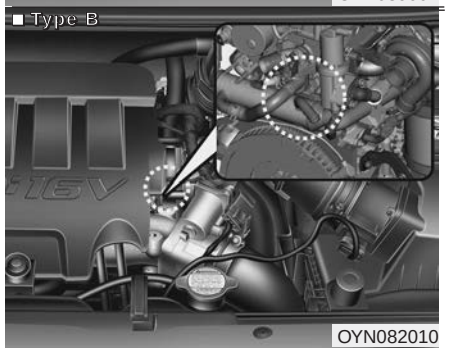

OYN082010

YN eng 8.QXP 19.9.2011 19:06 Page 9

AIR CONDITIONER COMPRESSOR LABEL

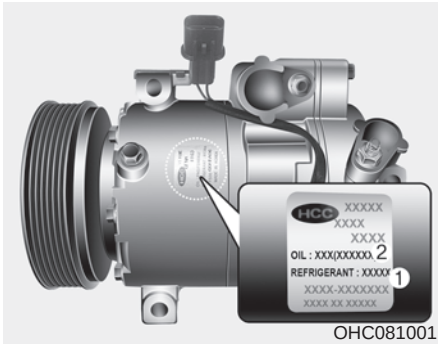

OHC081001

A compressor label informs you the type of compressor your vehicle is equipped with such as model, supplier part number, production number, refrigerant (1) and refrigerant oil (2).

YN eng INDEX.QXP 2011.09.22. 16:35 Page 1

Index

YN eng INDEX.QXP 2011.09.22. 16:35 Page 2

A

Air bag warning label 3-59
Air bag warning light 3-40
Air bags 3-37
  Air bag warning label 3-59
  Air bag warning light 3-40
  Curtain air bag 3-51
  Driver's and passenger's front air bag 3-44
  Side impact air bag 3-49
  SRS components and functions 3-42
Air cleaner 7-33
Alarm system 4-11
Antenna 4-100
Anti-lock brake system (ABS) 5-27
Appearance care 7-72
  Exterior care 7-72
  Interior care 7-77
Ashtray 4-94
Audio system 4-100
  Antenna 4-100
Auto seat warmer(front) 3-8
Automatic climate control system 4-81
  Air conditioning 4-87
  Automatic heating and air conditioning 4-82
  Manual heating and air conditioning 4-83
Automatic transaxle 5-19
Aux, USB and iPod port 4-96

B

Battery 7-39
Battery saver function 4-61
Before driving 5-3
Bottle holders, see cup holders 4-94
Brake system 5-24
  Anti-lock brake system (ABS) 5-27
  Electronic stability program (ESP) 5-29
  Parking brake 5-25
  Power brakes 5-24
  Emergency Stop Signal 5-32
  Hill-start assist control 5-32
  Vehicle stability management 5-33
Brakes fluid 7-28
Bulb replacement 7-63
Bulb wattage 8-2
Button start/stop, see engine start/stop button 5-8

C

Camera (Rear view) 4-60
Capacities (Lubricants) 8-4

YN eng INDEX.QXP 2011.09.22. 16:35 Page 3

Care
Exterior care 7-72
Interior care 7-77
Tire care 7-42
Catalytic converters 7-80
Center console storage 4-91
Central door lock switch 4-14
Certification label 8-7
Chains
Tire chains 5-49
Changing tires 6-8
Checking tire inflation pressure 7-43
Child restraint system 3-26
ISOFIX system 3-32
lap/shoulder belt 3-16
Recommended child restraint system 3-36
Tether anchor system 3-31
Child-protector rear door lock 4-16
Cigarette lighter 4-93
Climate control (automatic) 4-81
Climate control (manual) 4-72
Climate control air filter 4-79,87
Climate control air filter (replacement) 7-34
Clock (Digital) 4-93
Clothes hanger 4-97
Combined instrument, see instrument cluster 4-40
Compact spare tire 6-13
Compact spare tire replacement 7-47
Components of the tire mobility kit 6-16
Coolant 7-25
Cool box 4-92
Cooling fluid, see engine coolant 7-25
Crankcase emission control system 7-78
Cruise control system 5-35
Cup holder 4-94
Curtain air bag 3-51

D

Dashboard illumination, see instrument panel illumination. . 4-42
Dashboard, see instrument cluster 4-40
Defogging (Windshield) 4-89
Defroster (Rear window) 4-71
Defrosting (Windshield) 4-89
Diesel particulate filter 7-81
Digital clock 4-93
Dimensions 8-2
Display illumination, see instrument panel illumination . . 4-42
Displays, see instrument cluster 4-40
Door locks 4-13
Central door lock switch 4-14
Child-protector rear door lock 4-16
DPF 7-81

YN eng INDEX.QXP 2011.09.22. 16:35 Page 4

Drinks holders, see cup holders 4-94
Driver's and passenger's front air bag. 3-44
Driving at night. 5-45
Driving in flooded areas 5-46
Driving in the rain 5-46

E

Economical operation 5-41
Electric power steering 4-33
Electronic stability program (ESP). 5-29
Emergency starting 6-4
  Jump starting 6-4
  Push starting 6-5
Emergency while driving 6-2
Emission control system 7-78
  Crankcase emission control system 7-78
  Evaporative emission control System 7-78
  Exhaust emission control system 7-79
Engine compartment 2-4
Engine coolant 7-25
Engine number 8-8
Engine oil 7-24
Engine overheats. 6-6
Engine start/stop button 5-8
Engine will not start 6-3
Evaporative emission control system 7-78
Exhaust emission control system 7-79
Explanation of scheduled maintenance items 7-20
Exterior care 7-72

F

Flat tire 6-7
  Changing tires. 6-8
  Compact spare tire 6-13
  Components of the tire mobility kit 6-16
  Jack and tools 6-7
  Removing and storing the spare tire 6-8
  Tiremobilitykit 6-15
Floor mat anchor(s) 4-97
Fluid
  Automatic transaxle fluid 7-29
  Brakes fluid 7-28
  Washer fluid 7-31
Fog light (front) 7-66
Fog light (rear) 7-69
Fog light bulbs replacement
  Fog light (front) 7-66
  Fog light (rear) 7-69
Folding the rear seat 3-10
Front seat adjustment 3-5
Fuel filler lid 4-26
Fuel filter 7-32

YN eng INDEX.QXP 2011.09.22. 16:35 Page 5

Fuel gauge 4-43
Fuel requirements 1-3
Fuses 7-52
Fuse/relay panel description 7-56
Instrument panel fuse 7-53
Main fuse 7-55

G

Gauge
Fuel gauge 4-43
Glove box 4-91

H

Hazard warning flasher 4-61
Hazardous driving conditions 5-43
Headlight bulb replacement 7-63
Headrest(front) 3-6
Headrest(rear) 3-12
Height adjustment 3-16
Highway driving 5-47
Hood 4-24
Horn 4-34
How to use this manual 1-2

I

Immobilizer system 4-3
Indicator symbols on the instrument cluster 1-7
Indicators and warnings 4-47
Inside rearview mirror 4-35
Instrument cluster 4-40
Fuel gauge 4-43
Instrument panel illumination 4-42
Odometer 4-43
Speedometer 4-42
Tachometer 4-42
Trip computer 4-44
Warning and indicators 4-47
Instrument panel fuse 7-53
Instrument panel illumination 4-42
Instrument panel overview 2-3
Interior care 7-77
Interior features 4-93
Ashtray 4-94
Aux, USB and iPod port 4-96
Cigarette lighter 4-93
Clothes hanger 4-97
Cup holder 4-94
Digital clock 4-93
Floor mat anchor(s) 4-97

YN eng INDEX.QXP 2011.09.22. 16:35 Page 6

Power outlet 4-96
Sunvisor 4-95
Interior light 4-70
Interior overview 2-2
ISG (Idle stop and go) system 5-14
ISOFIX system 3-32

J

Jack and tools 6-7
Jump starting 6-4

K

Key positions 5-4
Keys 4-2

L

Label
Air bag warning label 3-59
Tire sidewall labeling 7-48
Tire specification and pressure label 8-8
Vehicle certification label 8-7
Lap/shoulder belt 3-16
Light bulbs 7-63
Lighting 4-61
Battery saver function 4-61
Lubricants and capacities 8-4

M

Main fuse, see memory fuse 7-54
Maintenance
Explanation of scheduled maintenance items 7-20
Maintenance services 7-3
Maintenance under severe usage conditions 7-12,18
Normal maintenance schedule 7-8,14
Owner maintenance 7-5
Scheduled maintenance service 7-7
Tire maintenance 7-47
Maintenance schedule
Maintenance under severe usage conditions 7-12,18
Normal maintenance schedule 7-8,14
Maintenance services 7-7
Manual climate control system 4-72
Air conditioning 4-77
Climate control air filter 4-79
Heating and air conditioning 4-73
Manual transaxle 5-16
Manual window 4-23
Memory fuse 7-54

YN eng INDEX.QXP 2011.09.22. 16:35 Page 7

Mirrors 4-35
Day/night rearview mirror 4-35
Folding the outside rearview mirror. 4-38
Inside rearview mirror 4-35
Outside rearview mirror 4-36

O

Odometer 4-43
Oil (Engine) 7-24
Outside rearview mirror 4-36
Overheats 6-6
Owner maintenance 7-5

P

Parking brake 5-25
Power brakes. 5-24
Power outlet 4-96
Power window lock button. 4-22
Pre-tensioner seat belt. 3-21
Push starting 6-5

R

Rear combination light bulb replacement 7-68
Rear parking assist system 4-57
Rear seat 3-9
Rear view camera 4-60
Recommended cold tire inflation pressures 7-42
Recommended lubricants and capacities 8-4
Recommended SAE viscosity number. 8-6
Remote keyless entry 4-5
Replacement light bulb
Fog light (front) 7-66
Fog light (rear) 7-69
Headlight bulb replacement 7-63
Interior light bulb replacement. 7-71
Rear combination light bulb replacement 7-68
Road warning 6-2
Rocking the vehicle 5-44

S

Scheduled maintenance service 7-7
Maintenance under severe usage conditions. 7-12,18
Normal maintenance schedule. 7-8,14
Seat belt warning (front). 3-16
Seat belt warning (rear) 3-18
Seat belts. 3-14
Height adjustment. 3-16
Lap/shoulder belt 3-16
Pre-tensioner seat belt 3-21
Seat belt warning (front) 3-15
Seat warmer(front) 3-8

YN eng INDEX.QXP 2011.09.22. 16:35 Page 8

Seatback pocket 3-9
Seats 3-2
Folding the rear seat 3-10
Front seat adjustment 3-5
Headrest(front) 3-6
Headrest(rear) 3-12
Rear seat 3-9
Seat warmer(front) 3-8
Seatback pocket 3-9
Shift lock system 5-22
Side impact air bag 3-49
Smart key 4-8
Smooth cornering 5-45
Snow tires 5-48
Spare tire
Compact spare tire 6-13
Compact spare tire replacement 7-47
Removing and storing the spare tire 6-8
Special driving conditions 5-43
Driving at night 5-45
Driving in flooded areas 5-46
Driving in the rain 5-46
Hazardous driving conditions 5-43
Highway driving 5-47
Rocking the vehicle 5-44
Smooth cornering 5-45
Speed limit control system 5-39
Speedometer 4-42
SRS components and functions 3-42
Starting difficulties, see engine will not start 6-3
Steering wheel 4-33
Electric power steering 4-33
Horn 4-34
Tilt steering 4-33
Storage compartment 4-91
Center console storage 4-91
Cool box 4-92
Glove box 4-91
Sunroof 4-29
Sunvisor 4-95

T

Tachometer 4-42
Tailgate 4-17
Emergency tailgate safety release 4-18
Tether anchor system 3-31
Theft-alarm system 4-11
Tilt steering 4-33
Tire chains 5-49
Tire pressure monitoring system (TPMS) 6-20
Tire specification and pressure label 8-8
Tire mobility kit 6-15
Tires and wheels 7-42

YN eng INDEX.QXP 2011.09.22. 16:35 Page 9

Checking tire inflation pressure 7-43
Compact spare tire replacement 7-47
Recommended cold tire inflation pressures 7-42
Tire care 7-42
Tire maintenance 7-47
Tire replacement 7-46
Tire rotation 7-44
Tire sidewall labeling 7-48
Tire traction 7-47
Wheel alignment and tire balance 7-45
Wheel replacement 7-47
TMK, see tiremobilitykit 6-15
Towing 6-25
TPMS 6-20
Trailer towing 5-52
Transaxle
Automatic transaxle 5-19
Manual transaxle 5-16
Trip computer 4-44

U

Using the tiremobilitykit 6-15

V

Vehicle break-in process 1-5
Vehicle certification label 8-7
Vehicle identification number (VIN) 8-7
Vehicle stability management 5-33
Vehicle weight 5-60

W

Warning and indicators 4-47
Washer fluid 7-31
Wheel alignment and tire balance 7-45
Wheel replacement 7-47
Windows 4-19
Auto up/down window 4-21
Manual window 4-23
Power window lock button 4-22
Winter driving 5-48
Snow tires 5-48
Tire chains 5-49
Wiper blades 7-36
Wipers and washers 4-67