OWNER'S MANUAL



stinger

KIA

The Power to Surprise

Kia, THE COMPANY

Thank you for becoming the owner of a new Kia vehicle.

As a global car manufacturer focused on building high-quality, value for money prices, Kia Motors is dedicated to providing you with a customer service experience that exceeds your expectations.

At all of our Kia dealerships you will be treated with warmth, hospitality and professionalism by people who care based on our **"Family-like Care"** promise.

All information contained in this Owner's Manual was accurate at the time of publication. However, Kia reserves the right to make changes at any time so that our policy of continual product improvement can be carried out.

This manual applies to all trims of this vehicle and includes images, descriptions, and explanations of optional as well as standard equipment. As a result, some material in this manual may not be applicable to your specific Kia vehicle. Some images are shown for illustration only and may show features that differ from those on your vehicle.

Enjoy your vehicle and Kia's "Family-like Care" experience!

Thank you for choosing a Kia vehicle.

This manual will familiarize you with operational, maintenance and safety information about your new vehicle. It is supplemented by a Warranty and Maintenance book that provides important information on all warranties regarding your vehicle. Kia urges you to read these publications carefully and follow the recommendations to help assure enjoyable and safe operation of your new vehicle.

Kia offers a great variety of options, components and features for its various models. Therefore, some of the equipment described in this manual, along with the various illustrations, may not be applicable to your particular vehicle.

The information and specifications provided in this manual were accurate at the time of printing. Kia reserves the right to discontinue or change specifications or design at any time without notice and without incurring any obligation. If you have questions, Kia recommends to check with an authorized Kia dealer/service partner.

Kia assures you of our continuing interest in your motoring pleasure and satisfaction in your Kia vehicle.

© 2018 Kia MOTORS Corp.

All rights reserved. Reproduction by any means, electronic or mechanical, including photocopying, recording, or by any information storage and retrieval system or translation in whole or part is not permitted without written authorization from Kia MOTORS Corporation.

Printed in Korea

Table of contents

Introduction	1
Your vehicle at a glance	2
Safety features of your vehicle	3
Features of your vehicle	4
Driving your vehicle	5
What to do in an emergency	6
Maintenance	7
Specifications & Consumer information	8
Appendix	9
Alphabetical index	I

Introduction

1

How to use this manual..... 1-02
Fuel requirements..... 1-03
  Gasoline engine..... 1-03
  Diesel engine..... 1-05
Vehicle break-in process..... 1-06
Risk of burns when parking or stopping vehicle..... 1-07

HOW TO USE THIS MANUAL

We want to help you get the greatest possible driving pleasure from your vehicle. Your Owner's Manual can assist you in many ways. We strongly recommend that you read the entire manual. In order to minimize the chance of death or injury, you must read the WARNING and CAUTION sections in the manual.

Illustrations complement the words in this manual to best explain how to enjoy your vehicle. By reading your manual, you learn about features, important safety information, and driving tips under various road conditions.

The general layout of the manual is provided in the Table of Contents. Use the index when looking for a specific area or subject; it has an alphabetical listing of all information in your manual.

Sections: This manual has 9 sections plus an index. Each section begins with a brief list of contents so you can tell at a glance if that section has the information you want.

You will find various WARNINGs, CAUTIONs, and NOTICEs in this manual. These WARNINGs were prepared to enhance your personal safety. You should carefully read and follow ALL procedures and recommendations provided in these WARNINGs, CAUTIONs and NOTICEs.

⚠ WARNING

A WARNING indicates a situation in which harm, serious bodily injury or death could result if the warning is ignored.

⚠ CAUTION

A CAUTION indicates a situation in which damage to your vehicle could result if the caution is ignored.

✻ NOTICE

A NOTICE indicates interesting or helpful information is being provided.

FUEL REQUIREMENTS

Gasoline engine

Unleaded

For Europe

For the optimal vehicle performance, we recommend you to use unleaded gasoline with an octane rating of RON (Research Octane Number) 95 / AKI (Anti Knock Index) 91 or higher.
You may use unleaded gasoline with an octane rating of RON 91~94 / AKI 87~90 but it may result in slight performance reduction of the vehicle. (Do not use methanol blended fuels.)

Except Europe

Your new Kia vehicle is designed to use only unleaded fuel having an Octane Rating of RON (Research Octane Number) 91 / AKI (Anti-Knock Index) 87 or higher. (Do not use methanol blended fuels.)
Your new vehicle is designed to obtain maximum performance with UNLEADED FUEL, as well as minimize exhaust emissions and spark plug fouling.

⚠ CAUTION

NEVER USE LEADED FUEL. The use of leaded fuel is detrimental to the catalytic converter and will damage the engine control system's oxygen sensor and affect emission control. Never add any fuel system cleaning agents to the fuel tank other than what has been specified. (Kia recommends to consult an authorized Kia dealer/service partner for details.)

⚠ WARNING

- **Do not "top off" after the nozzle automatically shuts off when refueling.**
- **Always check that the fuel cap is installed securely to prevent fuel spillage in the event of an accident.**

Leaded (if equipped)

For some countries, your vehicle is designed to use leaded gasoline.

When you are going to use leaded gasoline, Kia recommends to visit an authorized Kia dealer/service partner and ask whether leaded gasoline in your vehicle is available or not.
Octane Rating of leaded gasoline is same with unleaded one.

Gasoline containing alcohol and methanol

Gasohol, a mixture of gasoline and ethanol (also known as grain alcohol), and gasoline or gasohol containing methanol (also known as wood alcohol) are being marketed along with or instead of leaded or unleaded gasoline.
Do not use gasohol containing more than 10% ethanol, and do not use gasoline or gasohol containing any methanol. Either of these fuels may cause drivability problems and damage to the fuel system, engine control system and emission control system.
Discontinue using gasohol of any kind if drivability problems occur.
Vehicle damage or drivability problems may not be covered by the manufacturer's warranty if they result from the use of:

1. Gasohol containing more than 10% ethanol.

2. Gasoline or gasohol containing methanol.
3. Leaded fuel or leaded gasohol.

⚠ CAUTION

Never use gasohol which contains methanol. Discontinue use of any gasohol product which impairs drivability.

Other fuels

Using fuels such as
- Silicone (Si) contained fuel,
- MMT (Manganese, Mn) contained fuel,
- Ferrocene (Fe) contained fuel, and
- Other metalic additives contained fuels, may cause vehicle and engine damage or cause plugging, misfiring, poor acceleration, engine stalling, catalyst melting, abnormal corrosion, life cycle reduction, etc.
  Also, the Malfunction Indicator Lamp (MIL) may illuminate.

✻ NOTICE

Damage to the fuel system or performance problem caused by the use of these fuels may not be covered by your New Vehicle Limited Warranty.

Use of MTBE

Kia recommends avoiding fuels containing MTBE (Methyl Tertiary Butyl Ether) over 15.0% vol. (Oxygen Content 2.7% weight) in your vehicle.
Fuel containing MTBE over 15.0% vol. (Oxygen Content 2.7% weight) may reduce vehicle performance and produce vapor lock or hard starting.

⚠ CAUTION

Your New Vehicle Limited Warranty may not cover damage to the fuel system and any performance problems that are caused by the use of fuels containing methanol or fuels containing MTBE (Methyl Tertiary Butyl Ether) over 15.0% vol. (Oxygen Content 2.7% weight.)

Do not use methanol

Fuels containing methanol (wood alcohol) should not be used in your vehicle. This type of fuel can reduce vehicle performance and damage components of the fuel system, engine control system and emission control system.

Fuel additives

Kia recommends that you use unleaded gasoline which has an octane rating of RON (Research Octane Number) 95 / AKI (Anti Knock Index) 91 or higher (for Europe) or Octane Rating of RON (Reasearch Octane Number) 91 / AKI (Anti-Knock Index) 87 or higher (except Europe).
For customers who do not use good quality gasolines including fuel additives regularly, and have problems starting or the engine does not run smoothly, one bottle of additives added to the fuel tank at every 10,000 km (6,500 miles) (except China, Brazil) / 5,000 km (3,000 miles) (for China, Brazil).
Additives are available from a professional workshop along with information on how to use them. Kia recommends to visit an authorized Kia dealer/service partner. Do not mix other additives.

Operation in foreign countries

If you are going to drive your vehicle in another country, be sure to:

- Observe all regulations regarding registration and insurance.
- Determine that acceptable fuel is available.

Diesel engine

Diesel fuel

Diesel engine must be operated only on commercially available diesel fuel that complies with EN 590 or comparable standard. (EN stands for "European Norm"). Do not use marine diesel fuel, heating oils, or non-approved fuel additives, as this will increase wear and cause damage to the engine and fuel system. The use of non-approved fuels and / or fuel additives will result in a limitation of your warranty rights.
Diesel fuel of above cetane 51 is used in your vehicle. If two types of diesel fuel are available, use summer or winter fuel properly according to the following temperature conditions.

- Above -5 °C (23 °F) ... Summer type diesel fuel.
- Below -5 °C (23 °F) ... Winter type diesel fuel.

Watch the fuel level in the tank very carefully : If the engine stops through fuel failure, the circuits must be completely purged to restart.

⚠ CAUTION

Do not let any gasoline or water enter the tank. This would make it necessary to drain it out and to bleed the lines to avoid jamming the injection pump and damaging the engine.

⚠ CAUTION

■ Diesel Fuel (if equipped with DPF)

It is recommended to use the regulated automotive diesel fuel for diesel vehicle equipped with the DPF system.
If you use diesel fuel including high sulfur (more than 50 ppm sulfur) and unspecified additives, it can cause the DPF system to be damaged and white smoke can be emitted.

Biodiesel

Commercially supplied Diesel blends of no more than 7% biodiesel, commonly known as "B7 Diesel" may be used in your vehicle if Biodiesel meets EN 14214 or equivalent specifications. (EN stands for "European Norm").The use of biofuels exceeding 7% made from rapeseed methyl ester (RME), fatty acid methyl ester (FAME), vegetable oil methyl ester (VME) etc. or mixing diesel exceeding 7% with biodiesel will cause increased wear or damage to the engine and fuel system. Repair or replacement of worn or damaged components due to the use of non approved fuels will not be covered by the manufactures warranty.

⚠ CAUTION

- **Never use any fuel, whether diesel or B7 biodiesel or otherwise, that fails to meet the latest petroleum industry specification.**
- **Never use any fuel additives or treatments that are not recommended or approved by the vehicle manufacturer.**

VEHICLE BREAK-IN PROCESS

No special break-in period is needed. By following a few simple precautions for the first 1,000 km (600 miles) you may add to the performance, economy and life of your vehicle.

- Do not race the engine.
- While driving, keep your engine speed (rpm, or revolutions per minute) within 3,000 rpm.
- Do not maintain a single speed for long periods of time, either fast or slow. Varying engine speed is needed to properly break-in the engine.
- Avoid hard stops, except in emergencies, to allow the brakes to seat properly.
- Don't tow a trailer during the first 2,000 km (1,200 miles) of operation.

RISK OF BURNS WHEN PARKING OR STOPPING VEHICLE.

- Do not park or stop the vehicle near flammable items such as leaves, paper, oil, and tire. Such items placed near the exhaust system can become a fire hazard.
- When an engine idles at a high speed with the rear side of the vehicle touching the wall, heat of the exhaust gas can cause discoloration or fire. Keep enough space between the rear part of the vehicle and the wall.
- Be sure not to touch the exhaust/ catalytic systems while engine is running or right after the engine is turned off. There is a risk of burns since the systems are extremely hot.

Your vehicle at a glance

Exterior overview..... 2-02
Interior overview..... 2-04
Instrument panel overview..... 2-05
Engine compartment..... 2-07

EXTERIOR OVERVIEW

■ Front view

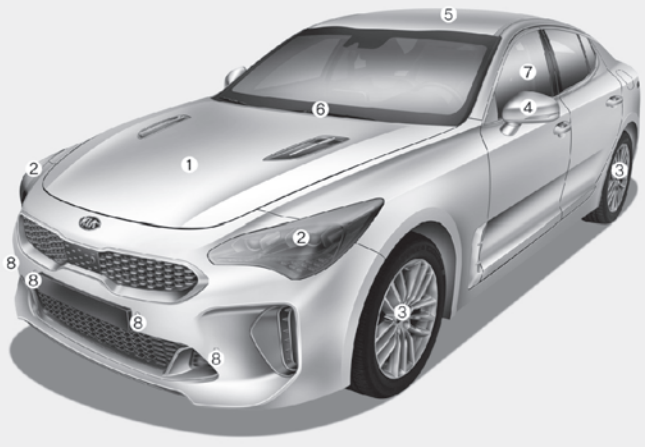

✻ The actual shape may differ from the illustration.

OCK017001L

1. Hood ..... p. 4-33
2. Head lamp (Features of your vehicle) ..... p. 4-102
   Head lamp (Maintenance) ..... p. 7-88
3. Wheel and tire ..... p. 7-54
   Wheel and tire ..... p. 8-09
4. Outside rearview mirror ..... p. 4-49
5. Wide sunroof ..... p. 4-39
6. Front windshield wiper blades (Features of your vehicle) ..... p. 4-109
   Front windshield wiper blades (Maintenance) ..... p. 7-48
7. Windows ..... p. 4-28
8. Parking distance warning-forward ..... p. 4-91

■ Rear view



✻ The actual shape may differ from the illustration.

OCK017002L

1. Door locks ..... p. 4-13
2. Fuel filler lid ..... p. 4-35
3. Rear combination lamp (Maintenance) ..... p. 7-88
4. High mounted stop lamp (Maintenance) ..... p. 7-88
5. Tailgate ..... p. 4-17
   Tailgate ..... p. 4-23
6. Antenna ..... p. 4-148
7. Rearview monitor ..... p. 4-97
8. Parking distance warning-reverse ..... p. 4-88
   Parking distance warning-forward ..... p. 4-91

INTERIOR OVERVIEW

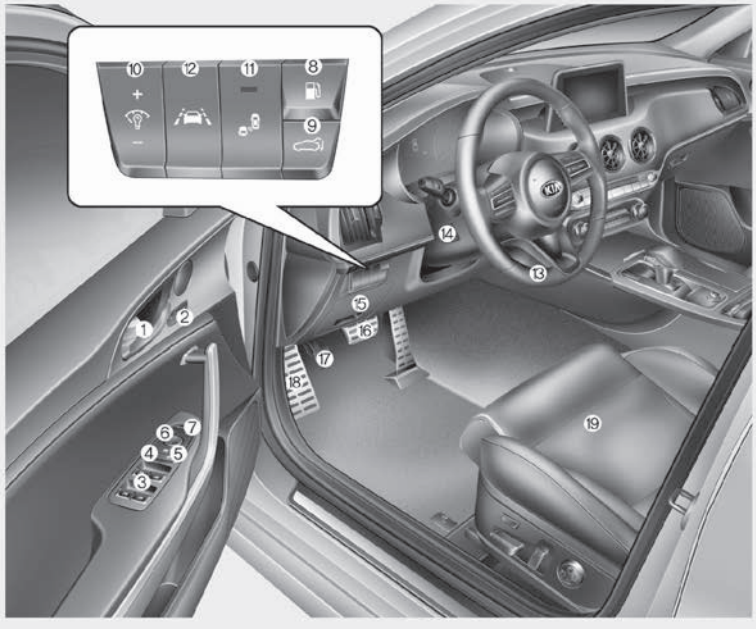

* The actual shape may differ from the illustration.

OCK018003L

1. Inside door handle..... p. 4-14
2. Driver position memory button..... p. 3-09
3. Power window switch..... p. 4-28
4. Central door lock switch..... p. 4-15
5. Power window lock button..... p. 4-31
6. Outside rearview mirror control..... p. 4-50
7. Outside rearview mirror folding..... p. 4-50
8. Fuel filler lid open button..... p. 4-35
9. Power tailgate open button..... p. 4-18
10. Instrument panel illumination control..... p. 4-53
11. BCW On/Off button..... p. 5-114
12. LKA On/Off button..... p. 5-107
13. Steering wheel..... p. 4-44
14. Tilt and telescopic steering control lever..... p. 4-45
15. Inner fuse panel..... p. 7-64
16. Brake pedal..... p. 5-39
17. Parking brake pedal..... p. 5-41
18. Hood release lever..... p. 4-33
19. Seat..... p. 3-02

INSTRUMENT PANEL OVERVIEW

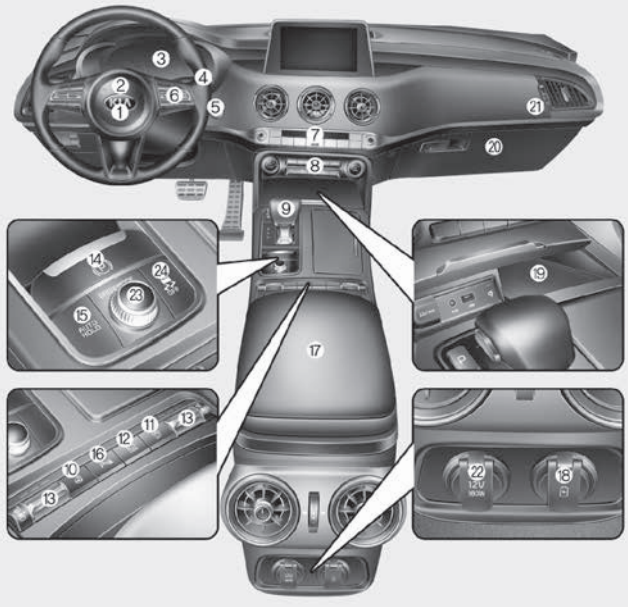

* The actual shape may differ from the illustration.

OCK018004L

1. Driver's front air bag ..... p. 3-52
2. Horn ..... p. 4-46
3. Instrument cluster ..... p. 4-52
4. Wiper and washer control lever ..... p. 4-109
5. Engine start/stop button ..... p. 5-07
6. Cruise control ..... p. 5-70
   Manual Speed Limit Assist ..... p. 5-75
   Smart cruise control with stop & go ..... p. 5-82
7. Hazard warning flasher ..... p. 6-02
8. Automatic climate control system ..... p. 4-122
9. Shift lever A/T ..... p. 5-12
   Shift lever A/T (shift by wire) ..... p. 5-21
10. Heated steering wheel button ..... p. 4-46
11. ISG On/Off button ..... p. 5-98
12. Surround view monitoring system On/Off button ..... p. 4-98
13. Seat warmer ..... p. 4-140
    Air ventilation seat ..... p. 4-141
14. Electronic parking brake (EPB) switch ..... p. 5-42
15. Auto Hold On/Off button ..... p. 5-47
16. Parking distance warning-forward On/Off button ..... p. 4-91
17. Center console storage box ..... p. 4-135
18. USB charger ..... p. 4-143
19. Smart phone wireless charger ..... p. 4-143
20. Glove box ..... p. 4-135
21. Passenger's front air bag ..... p. 3-52

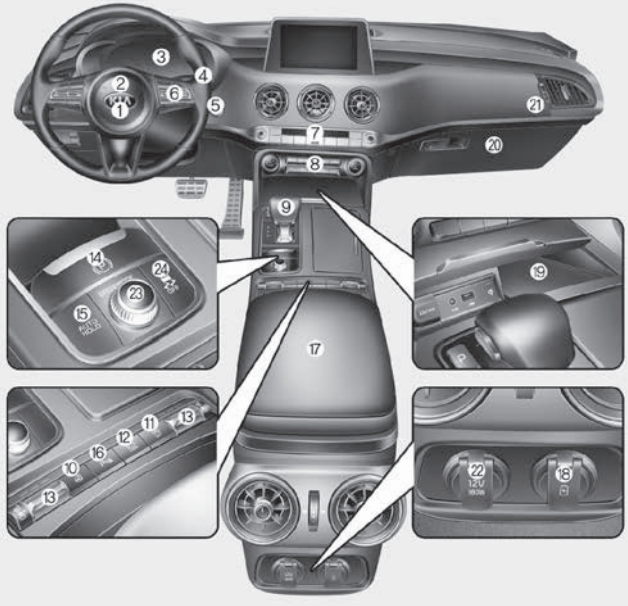

* The actual shape may differ from the illustration.

OCK018004L

22. Power outlet..... p. 4-142
23. Drive mode integrated control system..... p. 5-102
24. Electronic stability control(ESC)..... p. 5-52

ENGINE COMPARTMENT

■ THETA II 2.0L T-GDI Engine (Gasoline)

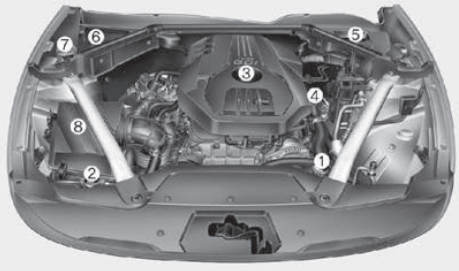

■ Lambda II PE 3.3L T-GDI Engine (Gasoline)

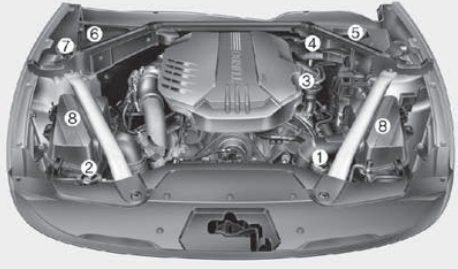

❋ The actual engine room in the vehicle may differ from the illustration.
❋ The battery is in the luggage room.

OCK077001/OCK077002B

1. Engine coolant reservoir..... p. 7-39
2. Radiator cap..... p. 7-39
3. Engine oil filler cap..... p. 7-35
4. Engine oil dipstick..... p. 7-35
5. Brake fluid reservoir..... p. 7-42
6. Fuse box..... p. 7-64
7. Windshield washer fluid reservoir..... p. 7-43
8. Air cleaner..... p. 7-46

■ R 2.2L Engine (Diesel)

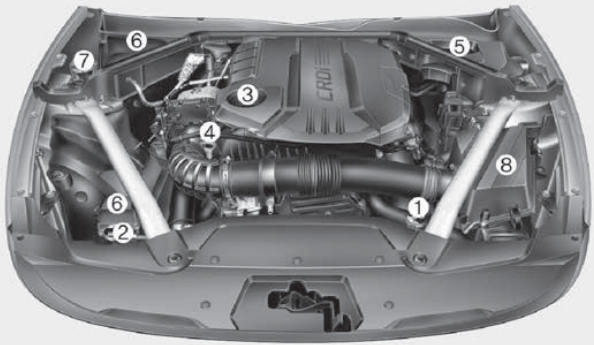

❋ The actual engine room in the vehicle may differ from the illustration.
❋ The battery is in the luggage room.

OCK078003

1. Engine coolant reservoir..... p. 7-39
2. Radiator cap..... p. 7-39
3. Engine oil filler cap..... p. 7-37
4. Engine oil dipstick..... p. 7-37
5. Brake fluid reservoir..... p. 7-42
6. Fuse box..... p. 7-64
7. Windshield washer fluid reservoir..... p. 7-43
8. Air cleaner..... p. 7-46

Safety features of your vehicle

Seats....3-02
Front seat adjustment - manual....3-06
Front seat adjustment - power....3-06
Driver position memory system....3-09
Driver position memory system reset....3-11
Headrest (for front seat)....3-11
Seatback pocket....3-14
Rear seat adjustment....3-14
Seat belts....3-19
Seat belt restraint system....3-19
Care of seat belts....3-30
Child restraint system (CRS)....3-31
Our recommendation: Children always in the rear....3-31
Selecting a Child Restraint System (CRS)....3-31
Installing a Child Restraint System (CRS)....3-33
ISOFIX anchorage and top-tether anchorage (ISOFIX anchorage system) for children....3-34
Air bag - supplemental restraint system....3-44
How does the air bag system operate....3-45
Air bag warning light....3-48
SRS components and functions....3-49
Driver's and passenger's front air bag....3-52
Side air bag....3-57
Curtain air bag....3-59
SRS care....3-67
Additional safety precautions....3-67
Adding equipment to or modifying your air bag-equipped vehicle....3-68
Air bag warning label....3-69
Active hood system....3-70
Active hood system activation situation....3-70
Active hood system non-activation situation....3-71
Active hood system malfunction....3-72

SEATS

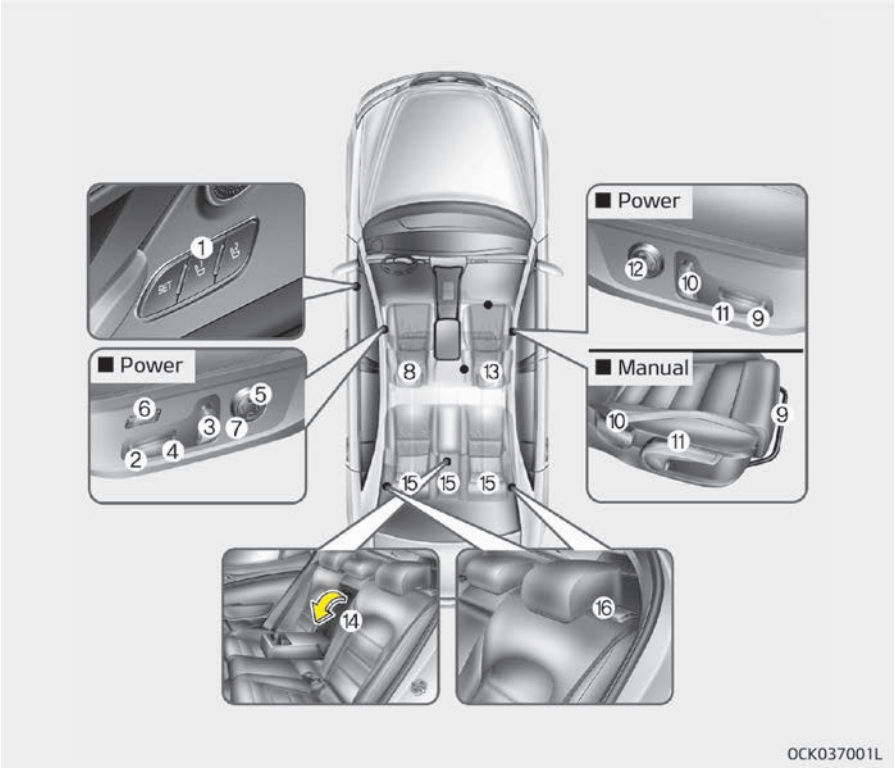

Driver's Seat

1. Driver position memory system*
2. Forward and backward
3. Seatback angle
4. Seat cushion height
5. Lumbar support
6. Cushion extension*
7. Seat back bolster control*
8. Headrest

Front passenger's seat

9. Forward and backward
10. Seatback angle
11. Seat cushion height
12. Lumbar support*
13. Headrest

Rear seat

14. Armrest
15. Headrest
16. Seatback folding lever*

*: if equipped

⚠ WARNING

■ Loose objects

Loose objects in the driver's foot area could interfere with the operation of the foot pedals, possibly causing an accident. Do not place anything under the front seats.

⚠ WARNING

■ Uprighting seat

When you return the seatback to its upright position, hold the seatback and return it slowly and be sure there are no other occupants around the seat. If the seatback is returned without being held and controlled, the back of the seat could spring forward resulting in accidental injury to a person struck by the seatback.

⚠ WARNING

■ Driver responsibility for passengers

(Continued)

(Continued)

Riding in a vehicle with the seatback reclined could lead to serious or fatal injury in an accident. If a seat is reclined during an accident, the occupant's hips may slide under the lap portion of the seat belt applying great force to the unprotected abdomen. Serious or fatal internal injuries could result. The driver must advise the passenger to keep the seatback in an upright position whenever the vehicle is in motion.

⚠ WARNING

Do not use a sitting cushion that reduces friction between the seat and passenger. The passenger's hips may slide under the lap portion of the seat belt during an accident or a sudden stop. Serious or fatal internal injuries could result because the seat belt cannot operate normally.

⚠ WARNING

■ Driver's seat

- **Never attempt to adjust the seat while the vehicle is moving. This could result in loss of control, and an accident causing death, serious injury, or property damage.**
- **Do not allow anything to interfere with the normal position of the seatback. Storing items against a seatback or in any other way interfering with proper locking of a seatback could result in serious or fatal injury in a sudden stop or collision.**
- **Always drive and ride with your seatback upright and the lap portion of the seat belt snug and low across the hips. This is the best position to protect you in case of an accident.**

(Continued)

(Continued)

- In order to avoid unnecessary and perhaps severe air bag injuries, always sit as far back as possible from the steering wheel while maintaining comfortable control of the vehicle. We recommend that your chest be at least 25 cm (10 inches) away from the steering wheel.

⚠ WARNING

■ Rear seatbacks

- The rear seatback must be securely latched. If not, passengers and objects could be thrown forward resulting in serious injury or death in the event of a sudden stop or collision.

(Continued)

(Continued)

- Luggage and other cargo should be laid flat in the cargo area. If objects are large, heavy, or must be piled, they must be secured.
  Under no circumstances should cargo be piled higher than the seatbacks. Failure to follow these warnings could result in serious injury or death in the event of a sudden stop, collision or rollover.
- No passenger should ride in the cargo area or sit or lie on folded seatbacks while the vehicle is moving. All passengers must be properly seated in seats and restrained properly while riding.
- When resetting the seatback to the upright position, make sure it is securely latched by pushing it forward and backwards.
- To avoid the possibility of burns, do not remove the carpet in the cargo area.
  Emission control devices beneath this floor generate high temperatures.

⚠ WARNING

After adjusting the seat, always check that it is securely locked into place by attempting to move the seat forward or backward without using the lock release lever. Sudden or unexpected movement of the driver's seat could cause you to lose control of the vehicle resulting in an accident.

⚠ WARNING

- Do not adjust the seat while wearing seat belts. Moving the seat cushion forward may cause strong pressure on the abdomen.
- Use extreme caution so that hands or other objects are not caught in the seat mechanisms while the seat is moving.
- Do not put a cigarette lighter on the floor or seat. When you operate the seat, gas may gush out of the lighter and cause fire.

(Continued)

(Continued)

- **If there are occupants in the rear seats, be careful while adjusting the front seat position.**
- **Use extreme caution when picking small objects trapped under the seats or between the seat and the center console. Your hands might be cut or injured by the sharp edges of the seat mechanism.**

⚠ CAUTION

■ Precautions with seat covers

- **Use caution when working on the seat cover. A short circuit or disconnection may occur, which could lead to noise, damage the ventilation system, and possible fire.**
- **Be aware of wires or air vents when placing a seat cover or covering the seat with plastic cover. A short circuit may occur, which could lead to fire.**

Feature of Seat Leather

- Leather is made from the outer skin of an animal, which goes through a special process to be available for use. Since it is a natural substance, each part differs in thickness or density.
  Wrinkles may appear as a natural result of stretching and shrinking depending on the temperature and humidity.
- The seat is made of stretchable fabric to improve comfort.
- The parts contacting the body are curved and the side supporting area is high which provides driving comfort and stability.
- Wrinkles may appear naturally from usage. It is not a fault of the product.

⚠ CAUTION

- **Wrinkles or abrasions which appear naturally from usage are not covered by warranty.**

(Continued)

(Continued)

- **Belts with metallic accessories, zippers or keys inside the back pocket may damage the seat fabric.**
- **Make sure not to wet the seat. It may change the nature of natural leather.**
- **Jeans or clothes which could bleach may contaminate the surface of the seat covering fabric.**

Front seat adjustment - manual

Forward and backward

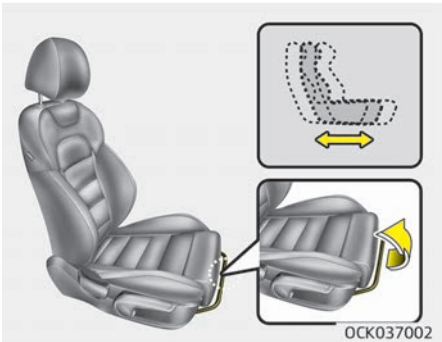

To move the seat forward or backward:

1. Pull the seat slide adjustment lever up and hold it.
2. Slide the seat to the position you desire.
3. Release the lever and make sure the seat is locked in place.

Adjust the seat before driving, and make sure the seat is locked securely by trying to move forward and backward without using the lever. If the seat moves, it is not locked properly.

Seatback angle

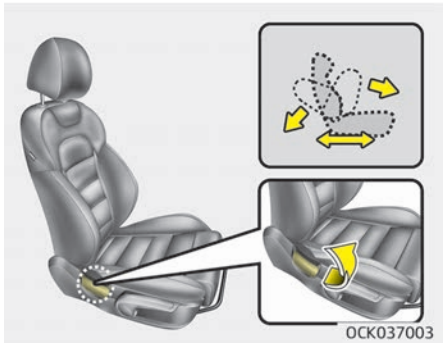

To recline the seatback:

1. Lean forward slightly and lift up the seatback recline lever.
2. Carefully lean back on the seat and adjust the seatback of the seat to the position you desire.
3. Release the lever and make sure the seatback is locked in place. (The lever MUST return to its original position for the seatback to lock.)

Front seat adjustment - power (if equipped)

The front seat can be adjusted by using the control switches located on the outside of the seat cushion. Before driving, adjust the seat to the proper position so you can easily control the steering wheel, pedals and switches on the instrument panel.

⚠ WARNING

The power seat is operable with the Engine start/stop button in OFF. Therefore, children should never be left unattended in the vehicle.

⚠ CAUTION

- **The power seat is driven by an electric motor. Stop operating once the adjustment is completed. Excessive operation may damage the electrical equipment.**

(Continued)

(Continued)

- **When in operation, the power seat consumes a large amount of electrical power. To prevent unnecessary charging system drain, don't adjust the power seat longer than necessary while the engine is not running.**
- **Do not operate two or more power seat control switches at the same time. Doing so may result in power seat motor or electrical component malfunction.**

Forward and backward

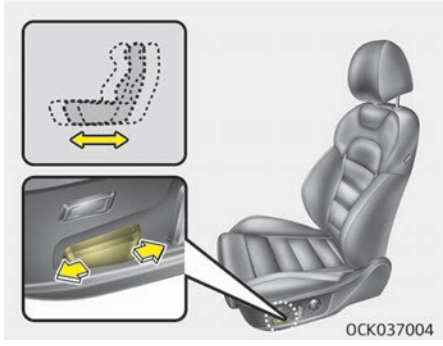

Push the control switch forward or backward to move the seat to the desired position. Release the switch once the seat reaches the desired position.

Cushion extension (for driver's seat- if equipped)

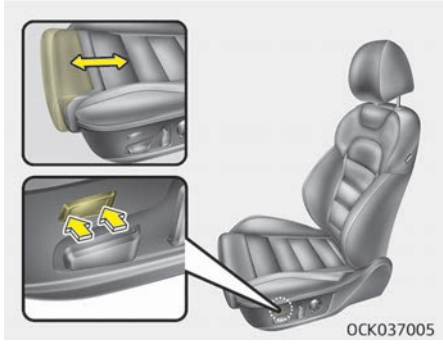

To move the front part of cushion forward:

1. Push the front part of control switch to move the seat cushion to the desired length.
2. Release the switch once the seat cushion reaches the desired length.

To move the front part of cushion rearward:

1. Push the rear part of control switch to move the seat cushion to the desired length.

2. Release the switch once the seat cushion reaches the desired length.

Seatback angle

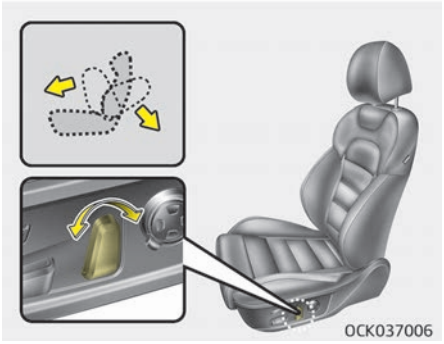

Push the control switch forward or backward to move the seatback to the desired angle. Release the switch once the seat reaches the desired position.

Seat height

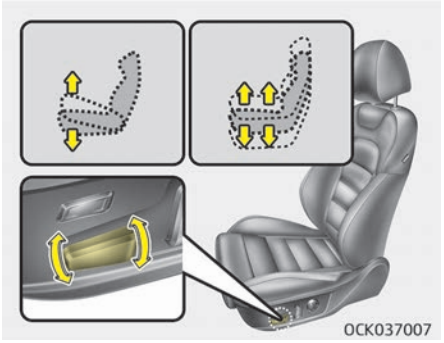

Pull the front portion of the control switch up to raise or press down to lower the front part of the seat cushion. Pull the rear portion of the control switch up to raise or press down to lower the seat cushion. Release the switch once the seat reaches the desired position.

Lumbar support

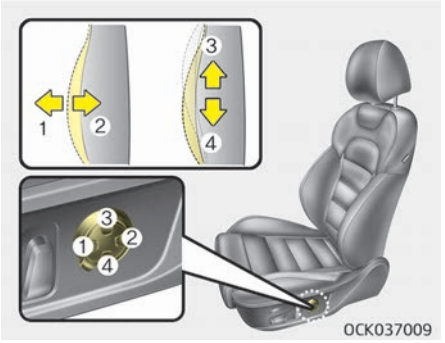

The lumbar support can be adjusted by pressing the lumbar support switch on the side of the seat.

1. Press the front portion (1) of the switch to increase support, or the rear portion (2) of the switch, to decrease support.
2. Release the switch once it reaches the desired position.
3. Press the upper portion (3) of the switch to move the support position up, or press the lower portion (4) of the switch, to move the support position down.

4. Release the switch once it reaches the desired position.

Seat back bolster control (if equipped)

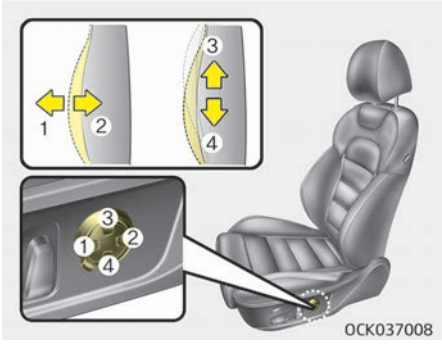

1. Turn the adjustment switch clockwise, the right/left seatback bolsters will be adjusted inward. Turn the switch counterclockwise, the seatback bolster will be adjusted outward.
2. To adjust the bolster height to its maximum in the default state, operate the switch for 8 seconds. After that, release the switch because there is no change in height even if you continue to operate the switch.
3. Once adjustment is done, leave the switch in place.

Driver position memory system (if equipped, for power seat)

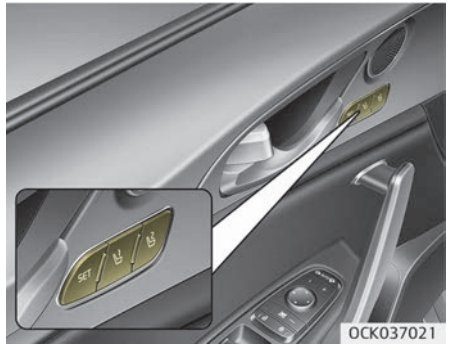

Driving Position Memory System is the facility that enables driver's seat, steering wheel, exterior mirrors, cluster and head-up display (HUD) to be controlled with a simple button operation, which allows a driver to recall memorized driving positions and automatically control them.

- Driver's seat/ Steering Wheel/ Exterior mirrors: location
- Cluster: Brightness of lighting
- Head up Display (HUD): height, rotation and brightness.

⚠ WARNING

Never attempt to operate the driver position memory system while the vehicle is moving.
This could result in loss of control, and an accident causing death, serious injury, or property damage.

Storing positions into memory using the buttons on the door

Storing driver's seat positions

1. Press the Parking button while the engine start/stop button is ON.
2. Adjust the driver's seat and outside rearview mirror and Head up display comfortable for the driver.
3. Press SET button on the control panel. The system will beep once.
4. Press one of the memory buttons (1 or 2) within 4 seconds after pressing the SET button. The system will beep twice when memory has been successfully stored.

Recalling positions from memory

1. Press the Parking button while the engine start/stop button is ON.
2. To recall the position in the memory, press the desired memory button (1 or 2). The system will beep once, then the driver's seat will automatically adjust to the stored position.

Adjusting the control switch for the driver's seat while the system is recalling the stored position will cause the movement to stop and move in the direction that the control switch is moved.

⚠ WARNING

Use caution when recalling the adjustment memory while sitting in the vehicle. Push the seat position control switch to the desired position immediately if the seat moves too far in any direction.

Easy access function (if equipped)

To provide easier entry to or exit from the vehicle for a driver, the driver's seat will be adjusted backwards as far as the distance set by User Setting on the Instrument Panel. This occurs when the driver's door is opened and the Engine start/stop button is Off with the shift lever in the P position. If, however, the distance between the front seat and back seats are too close, the driver's seat could fail to adjust itself backwards.
The steering wheel moves to the top. With the steering wheel moving as far as top and as far as forward to a driver on a regular basis, the steering wheel identifies and adjusts its location by itself.
The driver's seat and steering wheel will move back to its original position when a driver closes a driver's door with a smart key in his pocket and the engine start/stop button is in OFF or in ACC.
You can activate or deactivate this feature. Refer to "User settings" on page 4-64.

Driver position memory system reset

If the Driver position memory system reset fails to work, initialize the system as follows.
How to initialize:

1. Stop the car and open the driver's door with the Engine start/stop button in ON and the automatic shift lever in P(parking) position.
2. Pull the driver's seat forward as far as possible and have the seatback upright as much as possible using driver's seat forward/backward adjustment and seatback angle (recline) movement switches.
3. Push SET button and seat fore movement switch button for 2 seconds simultaneously.

Initialization in the process :

1. Initialization begins as the alarm sounds.
2. The seat and seatback will automatically move backwards. The alarm sound will continue while the system is in operation.
3. Initialization will be all set after the seat and seatback move to the center with alarm sound being raised. If, however, cases as follows occur, the initialization process will come to a stop and the alarm sound will stop as well.
   - When pushing driving position memory system button
   - When pushing driver's seat height adjustment switch
   - When relocating the shift lever from P position to other positions
   - When the driving speed exceeds 3 km/h
   - When the driver's door is closed

Headrest (for front seat)

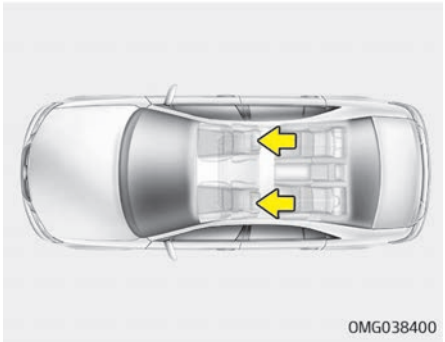

The driver's and front passenger's seats are equipped with a headrest for the occupant's safety and comfort.
The headrest not only provides comfort for the driver and front passenger, but also helps protect the head and neck in the event of a collision.

⚠ WARNING

- **For maximum effectiveness in case of an accident, the headrest should be adjusted so the middle of the headrest is at the same height of the center of gravity of an occupant's head. Generally, the center of gravity of most people's head is similar with the height of the top of their eyes. Also, adjust the headrest as close to your head as possible. For this reason, the use of a cushion that holds the body away from the seatback is not recommended.**
- **Do not operate the vehicle with the headrests removed. Severe injury to the occupants may occur in the event of an accident. Headrests may provide protection against neck injuries when properly adjusted.**
- **Do not adjust the headrest position of the driver's seat while the vehicle is in motion.**

Adjusting the height up and down

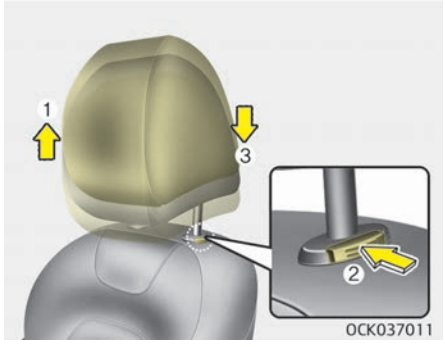

To raise the headrest, pull it up to the desired position (1). To lower the headrest, push and hold the release button (2) and lower the headrest to the desired position (3).

Forward and backward adjustment

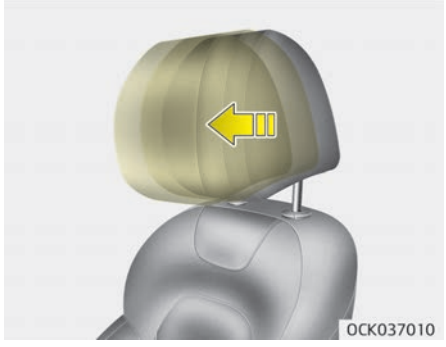

The headrest may be adjusted forward to 4 different positions by pulling the headrest forward to the desired detent.
To adjust the headrest to it's furthest backwards position,

Pull the headrest fully forward to the farthest position and release it.

Adjust the headrest so that it properly supports the head and neck.

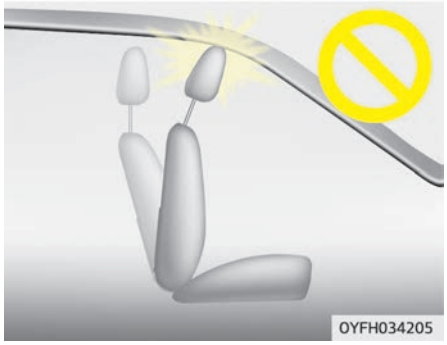

⚠ CAUTION

If you recline the seatback towards the front with the headrest and seat cushion raised, the headrest may come in contact with the sunvisor or other parts of the vehicle.

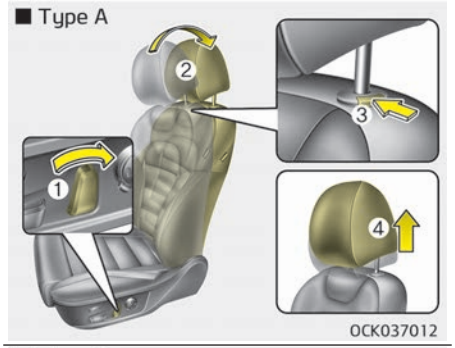

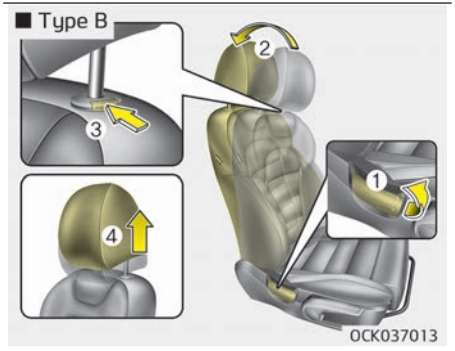

Removal/Reinstall

To remove the headrest:

1. Recline the seatback (2) with the recline lever or switch (1).
2. Raise headrest as far as it can go.
3. Press the headrest release button (3) while pulling the headrest up (4).

⚠ WARNING

NEVER allow anyone to ride in a seat with the headrest removed.

■ Type A

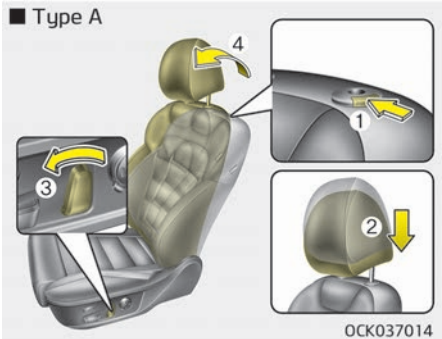

OCK037014

■ Type B

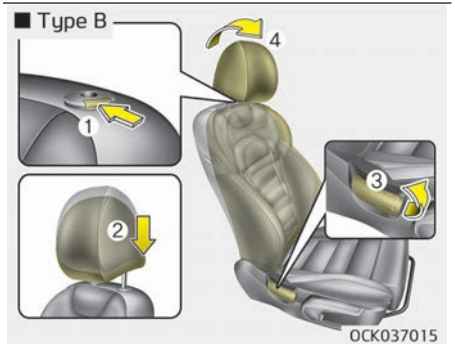

OCK037015

To reinstall the headrest:

1. Put the headrest poles (2) into the holes while pressing the release button or switch (1).
2. Recline the seatback(4) with the recline lever or switch (3).
3. Adjust the headrest to the appropriate height.

⚠ WARNING

Always make sure the headrest locks into position after reinstalling and adjusting it properly.

Seatback pocket (if equipped)

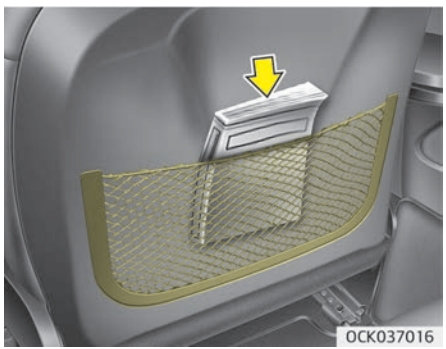

OCK037016

The seatback pocket is provided on the back of the front passenger's and driver's seatbacks.

⚠ WARNING

■ Seatback pockets

Do not put heavy or sharp objects in the seatback pockets. In an accident they could come loose from the pocket and injure vehicle occupants.

Rear seat adjustment

Headrest (if equipped)

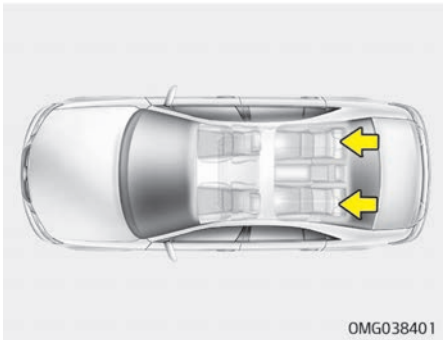

OMG038401

The rear seat is equipped with headrests for the occupant's safety and comfort.

The headrest not only provides comfort for passengers, but also helps to protect the head and neck in the event of a collision.

⚠ WARNING



- **For maximum effectiveness in case of an accident, the headrest should be adjusted so the middle of the headrest is at the same height of the center of gravity of an occupant's head. Generally, the center of gravity of most people's head is similar with the height of the top of their eyes. Also adjust the headrest as close to your head as possible. For this reason, the use of a cushion that holds the body away from the seatback is not recommended.**

(Continued)

(Continued)

- **Do not operate the vehicle with the headrests removed. Severe injury to an occupant may occur in the event of an accident. Headrests may provide protection against severe neck injuries when properly adjusted.**

Adjusting the height up and down (if equipped)

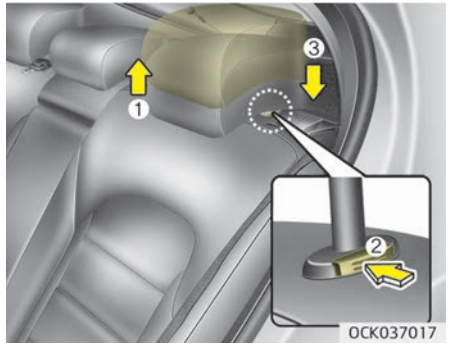

To raise the headrest, pull it up to the desired position (1). To lower the headrest, push and hold the release button (2) on the headrest support and lower the headrest to the desired position (3).

⚠ CAUTION

When there is no occupant in the rear seats, adjust the height of the headrest to the lowest position. The

(Continued)

(Continued)

rear seat headrest can reduce the visibility of the rear area.

Removal and installation (if equipped)

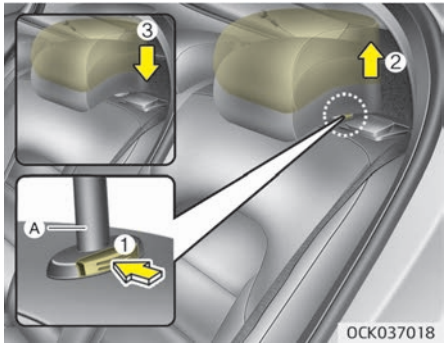

To remove the headrest, raise it as far as it can go then press the release button (1) while pulling upward (2).
To reinstall the headrest, put the headrest poles (A) into the holes while pressing the release button (1). Then adjust it to the appropriate height.

⚠ WARNING

Make sure the headrest locks in position after adjusting it to properly protect the occupants.

Armrest

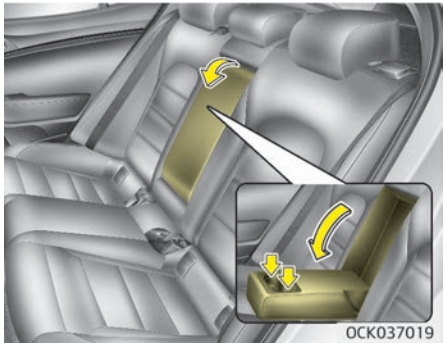

To use the armrest, pull it forward from the seatback.
Cup holders are in the arm rest.

Folding the rear seat (if equipped)

The rear seatbacks may be folded to facilitate carrying long items or to increase the luggage capacity of the vehicle.

⚠ WARNING

The purpose of the fold-down rear seatbacks is to allow you to carry longer objects than could not otherwise be accommodated.
Never allow passengers to sit on top of the folded down seatback while the car is moving as this is not a proper seating position and no seat belts are available for use. This could result in serious injury or death in case of an accident or sudden stop.
Objects carried on the folded down seatback should not extend higher than the top of the front seats. This could allow cargo to slide forward and cause injury or damage during sudden stops.

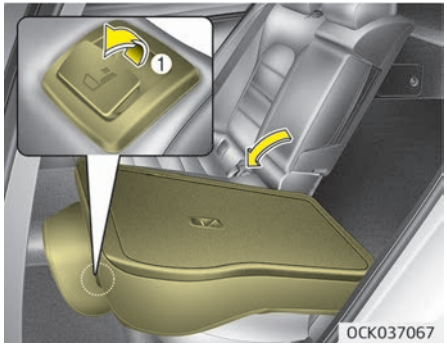

To fold down the rear seatback

1. Make sure the rear seat belt webbing is in the guide to prevent the seat belt from being damaged.
2. Set the front seatback to the upright position and if necessary, slide the front seat forward.
3. Lower the rear headrests to the lowest position.
4. Pull on the seatback folding lever(1), then fold the seat toward the front of the vehicle.

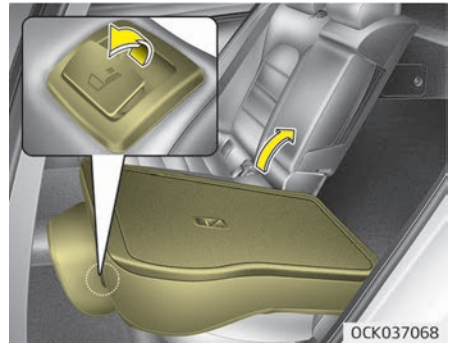

5. To use the rear seat, lift and push the seatback backward. Push the seat back firmly until it clicks into place. Make sure the seatback is locked in place.
6. Return the rear seat belt to the proper position.

⚠ WARNING

After folding the rear seat, unless the driver's position is properly set according to the driver's physical figure, do not fold the rear seat. It may increase body injuries in a sudden stop or collision.

⚠ WARNING

■ Uprighting seat

When you return the seatback to its upright position, hold the seatback and return it slowly. If the seatback is returned without holding it, the back of the seat could spring forward resulting in injury caused by being struck by the seatback.

⚠ WARNING

When you return the rear seatback to its upright position after being folded down:
Be careful not to damage the seat belt webbing or buckle. Do not allow the seat belt webbing or buckle to get caught or pinched in the rear seat. Ensure that the seatback is completely locked into its upright position by pushing on the top of the seatback. Otherwise, in an accident or sudden stop, the seat could fold down and allow cargo enter the passenger compartment, which could result in serious injury or death.

⚠ CAUTION

■ Damaging rear seat belt buckles

When you fold the rear seatback, insert the buckle between the rear seatback and cushion. Doing so can prevent the buckle from being damaged by the rear seatback.

⚠ CAUTION

■ Rear seat belts

When returning the rear seatbacks to the upright position, remember to return the rear shoulder belts to their proper position.

⚠ WARNING

■ Cargo

Cargo should always be secured to prevent it from being thrown about the vehicle in a collision and causing injury to the vehicle occupants. Do not place objects in the rear seats, since they cannot be properly se-

(Continued)

(Continued)

cured and may hit the front seat occupants in a collision.

⚠ WARNING

■ Cargo loading

Make sure the engine is off, the automatic transaxle is in P (Park) , and the parking brake is securely applied whenever loading or unloading cargo. Failure to take these steps may allow the vehicle to move if the shift lever is inadvertently moved to another position.

SEAT BELTS

Seat belt restraint system

⚠ WARNING

- For maximum restraint system protection, the seat belts must always be used whenever the vehicle is moving.
- Seat belts are most effective when seatbacks are in the upright position.
- Children age 12 and under must always be properly restrained in the rear seat. Never allow children to ride in the front passenger seat. If a child over 12 must be seated in the front seat, he/she must be properly belted and the seat should be moved as far back as possible.
- Never wear the shoulder belt under your arm or behind your back. An improperly positioned shoulder belt can cause serious injuries in a crash.
  The shoulder belt should be positioned midway over your shoulder across your collarbone.

(Continued)

(Continued)

- Never wear a seat belt over fragile objects. If there is a sudden stop or impact, the seat belt can damage it.
- Avoid wearing twisted seat belts. A twisted belt can't do its job well. In a collision, it could even cut into you. Be sure the belt webbing is straight and not twisted.
- Be careful not to damage the belt webbing or hardware. If the belt webbing or hardware is damaged, replace it.

⚠ WARNING

Seat belts are designed to bear upon the bony structure of the body, and should be worn low across the front of the pelvis or the pelvis, chest and shoulders, as applicable; wearing the lap section of the belt across the abdominal area must be avoided.
Seat belts should be adjusted as firmly as possible, consistent with comfort, to provide the protection for which they have been designed.

(Continued)

(Continued)

A slack belt will greatly reduce the protection afforded to the wearer.
Care should be taken to avoid contamination of the webbing with polishes, oils and chemicals, and particularly battery acid. Cleaning may safely be carried out using mild soap and water. The belt should be replaced if webbing becomes frayed, contaminated or damaged. It is essential to replace the entire assembly after it has been worn in a severe impact even if damage to the assembly is not obvious. Belts should not be worn with straps twisted. Each belt assembly must only be used by one occupant; it is dangerous to put a belt around a child being carried on the occupant's lap.

⚠ WARNING

- **No modifications or additions should be made by the user which will either prevent the seat belt adjusting devices from operating to remove slack, or prevent the seat belt assembly from being adjusted to remove slack.**
- **When you fasten the seat belt, be careful not to latch the seat belt in buckles of other seat. It's very dangerous and you may not be protected by the seat belt properly.**
- **Do not unfasten the seat belt and do not fasten and unfasten the seat belt repeatedly while driving. This could result in loss of control, and an accident causing death, serious injury, or property damage.**
- **When fastening the seat belt, make sure that the seat belt does not pass over objects that are hard or can break easily.**
- **Make sure there is nothing in the buckle. The seat belt may not be fastened securely.**

Driver's seat belt warning



As a reminder to the driver, the seat belt warning light will illuminate for approximately 6 seconds each time you turn the engine start/stop button is in ON regardless of belt fastening and warning chime will sound for approximately 6 seconds each time you turn the engine start/stop button is in ON when the belt is unfastened.
If a driver continue not to fasten the seat belt and drive below 20 km/h, the warning light will stay illuminated.
If a driver continue not to fasten the seat belt while driving over 20 km/h, the seat belt warning chime will sound for approximately 100 seconds and the corresponding warning light will blink.
If a driver unfasten the seat belt while driving below 20 km/h, the warning light will stay illuminated.
If a driver unfasten the seat belt while driving over 20 km/h, the seat belt warning chime will sound for approximately 100 seconds and the corresponding warning light will blink.

Front passenger's seat belt warning (if equipped)

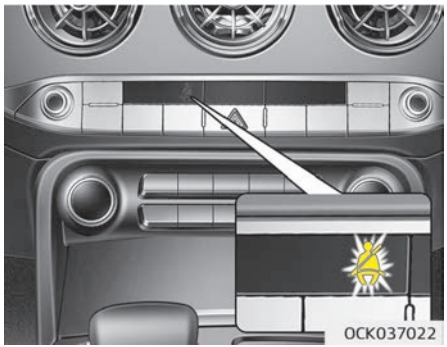

As a reminder to the front passenger, the front passenger's seat belt warning lights will illuminate for approximately 6 seconds each time you turn the Engine start/stop button in ON regardless of belt fastening.

If the front passenger continue not to fasten the seat belt and drive below 20 km/h, the warning light will stay illuminated.

If the front passenger continue not to fasten the seat belt while driving over 20 km/h, the seat belt warning chime will sound for approximately 100 seconds and the corresponding warning light will blink.
If the front passenger unfasten the seat belt while driving below 20 km/h, the warning light will stay illuminated.
If the front passenger unfasten the seat belt while driving over 20 km/h, the seat belt warning chime will sound for approximately 100 seconds and the corresponding warning light will blink.

Lap/shoulder belt

Height adjustment

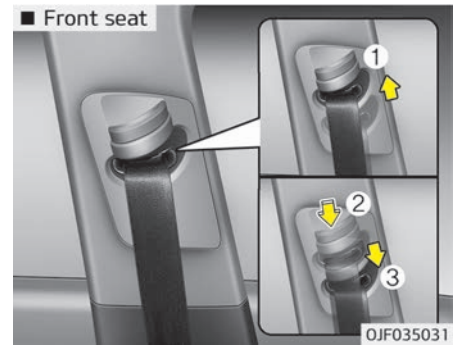

You can adjust the height of the shoulder belt anchor to one of 4 positions for maximum comfort and safety.
The height of the adjusting seat belt should not be too close to your neck. You will not be getting the most effective protection. The shoulder portion should be adjusted so that it lies across your chest and midway over your shoulder near the door and not your neck.
To adjust the height of the seat belt anchor, lower or raise the height adjuster into an appropriate position.

To raise the height adjuster, pull it up (1). To lower it, push it down (3) while pressing the height adjuster button (2). Release the button to lock the anchor into position. Try sliding the height adjuster to make sure that it has locked into position.

⚠ WARNING

- **Verify the shoulder belt anchor is locked into position at the appropriate height. Never position the shoulder belt across your neck or face. Improperly positioned seat belts can cause serious injuries in an accident.**
- **Failure to replace seat belts after an accident could leave you with damaged seat belts that will not provide protection in the event of another collision leading to personal injury or death. Replace your seat belts after being in an accident as soon as possible.**

To fasten your seat belt:

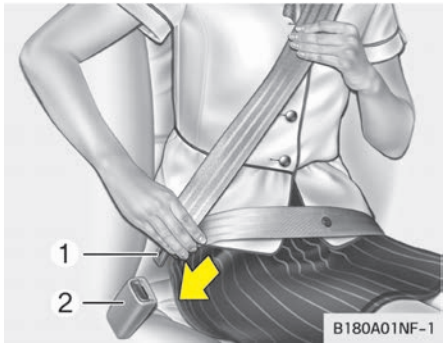

To fasten your seat belt, pull it out of the retractor and insert the metal tab (1) into the buckle (2). There will be an audible "click" when the tab locks into the buckle.
The seat belt automatically adjusts to the proper length only after the lap belt portion is adjusted manually so that it fits snugly around your hips. If you lean forward in a slow, easy motion, the belt will extend and let you move around. If there is a sudden stop or impact, however, the belt will lock into position. It will also lock if you try to lean forward too quickly.

✻ NOTICE

If you are not able to pull out the seat belt from the retractor, firmly pull the belt out and release it. Then you will be able to pull the belt out smoothly.

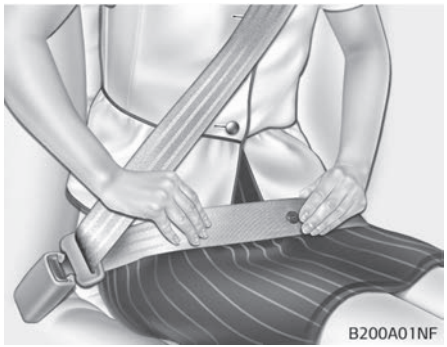

⚠ WARNING

You should place the lap belt portion as low as possible and snugly across your hips, not on your waist. If the

(Continued)

(Continued)

lap belt is located too high on your waist, it may increase the chance of injury in the event of a collision. Both arms should not be under or over the belt. Rather, one should be over and the other under, as shown in the illustration.
Never wear the seat belt under the arm near the door.

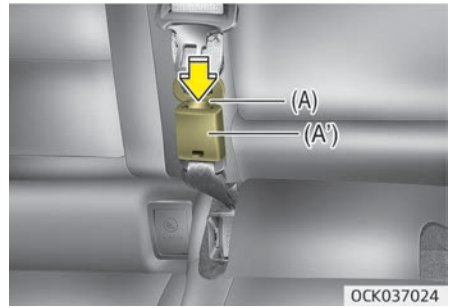

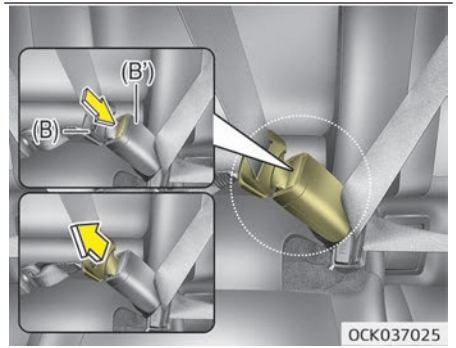

Pull the metal tab (B) and insert it (B) into the buckle (B'). There will be an audible "click" when the tab locks into the buckle. Make sure the belt is not twisted.

When using the rear center seat belt the buckle with the "CENTER" mark must be used.

⚠ WARNING

Always have the metal tab(A) inserted into the buckle (A').

✻ NOTICE

If you are not able to pull out the safety belt from the retractor, firmly pull the belt out and release it. After release, you will be able to pull the belt out smoothly.

To release the seat belt:

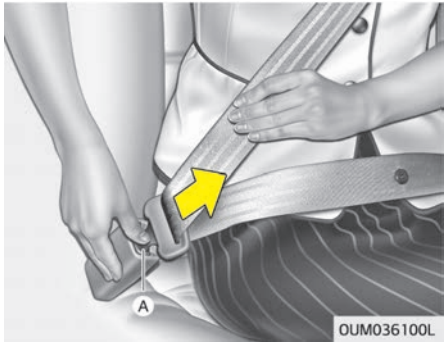

The seat belt is released by pressing the release button (A) in the locking buckle. When it is released, the belt should automatically draw back into the retractor.
If this does not happen, check the belt to be sure it is not twisted, then try again.

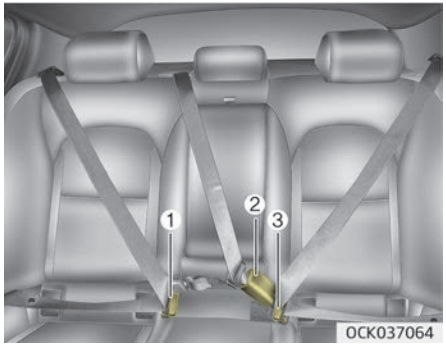

The seat belt should be locked into the buckle on each seat cushion to be properly fastened.

1. Rear right seat belt fastening buckle
2. Rear center seat belt fastening buckle
3. Rear left seat belt fastening buckle



When using the rear center seat belt, the buckle with the "CENTER" mark must be used.

⚠ CAUTION

Do not force to lock the left or right seat belt into the center seat belt buckle.
Make sure to lock the rear center seat belt into the center seat belt buckle.
If not, the improperly fastened seat belt will not be able to provide protection.

Pre-tensioner seat belt



Your vehicle is equipped with driver's and front passenger's pre-tensioner seat belts (retractor pretensioner).
EFD (Emergency Fastening Device) is equipped with driver's seat belt (if equipped).
Rear pre-tensioner seat belts are equipped (rear outboard seats-For Europe).
The pre-tensioner seat belts can be activated, where the frontal collision is severe enough, together with the air bags.

When the vehicle stops suddenly, or if the occupant tries to lean forward too quickly, the seat belt retractor will lock into position. In certain frontal collisions, the pre-tensioner will activate and pull the seat belt into tighter contact against the occupant's body.

1. Retractor Pretensioner
   The purpose of the retractor pretensioner is to make sure that the shoulder belts fit in tightly against the occupant's upper body in certain frontal collisions.
2. EFD (Emergency Fastening Device) (for driver's seat belt, if equipped)
   The purpose of the EFD is to make sure that the pelvis belts fit in tightly against the occupant's lower body in certain frontal collisions.

If the system senses excessive tension on the driver or passenger's seat belt when the pre-tensioner system activates, the load limiter inside the retractor pre-tensioner will release some of the pressure on the affected seat belt. (if equipped)

✻ NOTICE

■ if equipped with rollover sensor

The pre-tensioner will activate not only in a frontal collision but also in a side collision or rollover, if the vehicle is equipped with a side or curtain air bag.

✻ NOTICE

■ without rollover sensor

The pre-tensioner will activate not only in a frontal collision but also in a side collision, if the vehicle is equipped with a side or curtain air bag.

⚠ WARNING

For your safety, be sure that the belt webbing is not loose or twisted and always sit properly on your seat.

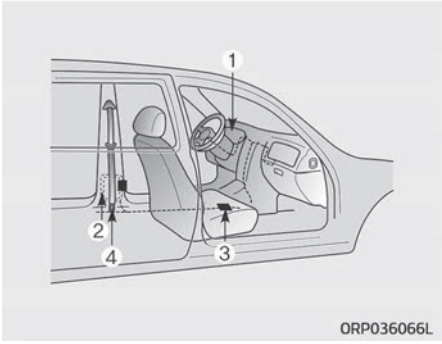

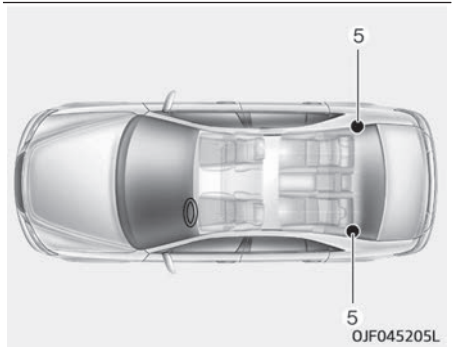

The seat belt pre-tensioner system consists mainly of the following components. Their locations are shown in the illustration:

1. SRS air bag warning light
2. Front retractor pre-tensioner assembly
3. SRS control module
4. Emergency fastening device (EFD) (if equipped)
5. Rear retractor pre-tensioner assembly (if equipped)

⚠ WARNING

To obtain maximum benefit from a pre-tensioner seat belt:

1. **The seatbelt must be worn correctly and adjusted to the proper position. Please read and follow all of the important information and precautions about your vehicle's occupant safety features – including seat belts and air bags – that are provided in this manual.**
2. **Be sure you and your passengers always wear seat belts properly.**

✻ NOTICE

- Pre-tensioner seat belts will be activated in certain frontal collisions. The pre-tensioner seat belts can be activated, where the frontal collision is severe enough, together with the air bags.
- When the pre-tensioner seat belts are activated, a loud noise may be heard and fine dust, which may appear to be smoke, may be visible in the passenger compartment. These are normal operating conditions and are not hazardous.
- Although it is harmless, the fine dust may cause skin irritation and should not be breathed for prolonged periods. Wash all exposed skin areas thoroughly after an accident in which the pre-tensioner seat belts were activated.

(Continued)

(Continued)

- Because the sensor that activates the SRS air bag is connected with the pre-tensioner seat belt, the SRS air bag warning light on the instrument panel will illuminate for approximately 6 seconds after the Engine start/stop button has been turned to the "ON" position, and then it should turn off.

⚠ CAUTION

If the pre-tensioner seat belt is not working properly, the SRS air bag warning light will illuminate even if there is no malfunction of the SRS air bag. If the SRS air bag warning light does not illuminate when the Engine start/stop button is turned to ON, or if it remains illuminated after illuminating for approximately 6 seconds, or if it illuminates while the vehicle is being driven, have the system inspected by a professional workshop. Kia recommends to visit an authorized Kia dealer/service partner.

⚠ WARNING

- **Pre-tensioners are designed to operate only one time. After activation, pre-tensioner seat belts must be replaced. All seat belts, of any type, should always be replaced after they have been worn during a collision.**
- **The pre-tensioner seat belt assembly mechanisms become hot during activation. Do not touch the pre-tensioner seat belt assemblies for several minutes after they have been activated.**
- **Do not attempt to inspect or replace the pre-tensioner seat belts yourself. Have the system inspected by a professional workshop. Kia recommends to visit an authorized Kia dealer/service partner.**
- **Do not strike the pre-tensioner seat belt assemblies.**
- **Do not attempt to service or repair the pre-tensioner seat belt system in any manner.**

(Continued)

(Continued)

- **Improper handling of the pre-tensioner seat belt assemblies, and failure to heed the warnings not to strike, modify, inspect, replace, service or repair the pre-tensioner seat belt assemblies may lead to improper operation or inadvertent activation and serious injury.**
- **Always wear the seat belts when driving or riding in a motor vehicle.**
- **If the vehicle or pre-tensioner seat belt must be discarded, contact a professional workshop. Kia recommends to contact an authorized Kia dealer/service partner.**

⚠ CAUTION

Body work on the front area of the vehicle may damage the pre-tensioner seat belt system. Therefore, have the system serviced by a professional workshop. Kia recommends to visit an authorized Kia dealer/service partner.

Seat belt precautions

⚠ WARNING

All occupants of the vehicle must wear their seat belts at all times. Seat belts and child restraints reduce the risk of serious or fatal injuries for all occupants in the event of a collision or sudden stop. Without a seat belt, occupants could be shifted too close to a deploying air bag, strike the interior structure or be thrown from the vehicle. Properly worn seat belts greatly reduce these hazards.
Always follow the precautions about seat belts, air bags and occupant seating contained in this manual.

Infant or small child

You should be aware of the specific requirements in your country. Child and/or infant seats must be properly placed and installed in the rear seat. For more information about the use of these restraints, refer to "Child restraint system" on page 3-31.

⚠ WARNING

Every person and animal in your vehicle needs to be properly restrained at all times, including infants and children. Never hold a child in your arms or lap when riding in a vehicle. The violent forces created during a crash will tear the child from your arms and throw the child against the interior. Always use a child restraint appropriate for your child's height and weight.

✻ NOTICE

Small children are best protected from injury in an accident when properly restrained in the rear seat by a child restraint system that meets the requirements of the Safety Standards of your country. Before buying any child restraint system, make sure that it has a label certifying that it meets Safety Standards of your country. The restraint must be appropriate for your child's height and weight. Check the

(Continued)

(Continued)

label on the child restraint for this information. Refer to "Child restraint system" on page 3-31.

Larger children

Children who are too large for child restraint systems should always occupy the rear seat and use the available lap/shoulder belts. The lap portion should be fastened and snugged on the hips and as low as possible. Check if the belt fits periodically. A child's squirming could put the belt out of position. Children are given the most safety in the event of an accident when they are restrained by a proper restraint system in the rear seat. If a larger child (over age 12) must be seated in the front seat, the child should be securely restrained by the available lap/shoulder belt and the seat should be placed in the rearmost position. Children age 12 and under should be restrained securely in the rear seat. NEVER place a child age 12 and under in the front seat. NEVER place a rear facing child seat in the front seat of a vehicle.

If the shoulder belt portion slightly touches the child's neck or face, try placing the child closer to the center of the vehicle. If the shoulder belt still touches their face or neck they need to be returned to a child restraint system.

⚠ WARNING

■ Shoulder belts on small children

- **Never allow a shoulder belt to be in contact with a child's neck or face while the vehicle is in motion.**
- **If seat belts are not properly worn and adjusted on children, there is a risk of death or serious injury.**

Pregnant women

The use of a seat belt is recommended for pregnant women to lessen the chance of injury in an accident. When a seat belt is used, the lap belt portion should be placed as low and securely as possible on the hips, not across the abdomen. For specific recommendations, consult a physician or doctor.

⚠ WARNING

■ Pregnant women

Pregnant women must never place the lap portion of the safety belt over the area of the abdomen where the fetus is located or above the abdomen where the belt could crush the fetus during an impact.

Injured person

A seat belt should be used when an injured person is being transported. When this is necessary, you should consult a physician for recommendations.

One person per belt

Two people (including children) should never attempt to use a single seat belt. This could increase the severity of injuries in case of an accident.

Do not lie down

To reduce the chance of injuries in the event of an accident and to achieve maximum effectiveness of the restraint system, all passengers should be sitting up and the front and rear seats should be in an upright position when the vehicle is moving. A seat belt cannot provide proper protection if the person is lying down in the rear seat or if the front and rear seats are in a reclined position.

⚠ WARNING

Riding with a reclined seatback increases your chance of serious or fatal injuries in the event of a collision or sudden stop. The protection of your restraint system (seat belts and air bags) is greatly reduced by reclining your seat. Seat belts must be secured against your hips and chest to work properly. The more the seatback is reclined, the greater the chance an occupant's hips will slide under the lap belt causing serious internal injuries. Also, the shoulder belt may strike the occupant's

(Continued)

(Continued)

neck. Drivers and passengers should always sit well back in their seats, properly belted, and with the seatbacks upright.

Care of seat belts

Seat belt systems should never be disassembled or modified. In addition, care should be taken to assure that seat belts and belt hardware are not damaged by seat hinges, doors or other abuse.

⚠ WARNING

- **When you return the rear seatback to its upright position after the rear seatback has been folded down, be careful not to damage the seat belt webbing or buckle. Be sure that the webbing or buckle does not get caught or pinched in the rear seat. A seat belt with damaged webbing or buckle could possibly fail during a collision or sudden stop, resulting in serious injury. If the webbing or buckles are damaged, get them replaced immediately.**
- **Seatbelts can become hot in a vehicle that has been closed up in sunny weather. They could burn infants and children.**

Periodic inspection

All seat belts should be inspected periodically for wear or damage of any kind. Any damaged parts should be replaced as soon as possible.

Keep belts clean and dry

Seat belts should be kept clean and dry. If belts become dirty, they can be cleaned by using a mild soap solution and warm water. Bleach, dye, strong detergents or abrasives should not be used because they may damage and weaken the fabric.

When to replace seat belts

Entire in-use seat belt assembly or assemblies should be replaced if the vehicle has been involved in an accident. This should be done even if no damage is visible. In this case, have the system replaced by a professional workshop. Kia recommends to consult an authorized Kia dealer/service partner.

CHILD RESTRAINT SYSTEM (CRS)

Our recommendation: Children always in the rear

⚠ WARNING

Always properly restrain children in the vehicle. Children of all ages are safer when riding in the rear seats. Never place a rearward-facing Child Restraint System on the front passenger seat, unless the air bag is deactivated.

Children under age 13 should always ride in the rear seats and must always be properly restrained to minimize the risk of injury in an accident, sudden stop or sudden maneuver.
According to accident statistics, children are safer when properly restrained in the rear seats than in the front seat. Children too large for a Child Restraint System must use the seat belts provided.
Most countries have regulations which require children to travel in approved Child Restraint Systems.

The laws governing the age or height/weight restrictions at which seat belts can be used instead of Child Restraint System differs among countries, so you should be aware of the specific requirements in your country, and where you are travelling.
Child Restraint Systems must be properly installed in the vehicle seat. Always use a commercially available Child Restraint System that meets the requirements of your country.

Child Restraint System (CRS)

Infants and younger children must be restrained in an appropriate rearward-facing or forward-facing CRS that has first been properly secured to the seat of the vehicle. Read and comply with the instructions for installation and use provided by the manufacturer of the Child Restraint System.

⚠ WARNING

- **Always follow the Child Restraint System manufacturer's instructions for installation and use.**

(Continued)

(Continued)

- **Always properly restrain your child in the Child Restraint System.**
- **Do not use an infant carrier or a child safety seat that "hooks" over a seatback, it may not provide adequate protection in an accident.**
- **After an accident, have the system checked by a professional workshop. Kia recommends to visit an authorized Kia dealer/service partner.**

Selecting a Child Restraint System (CRS)

When selecting a Child Restraint System for your child, always:

- Make sure the Child Restraint System has a label certifying that it meets applicable Safety Standards of your country.
  A Child Restraint System may only be installed if it was approved in accordance with the requirements of ECE-R44 or ECE-R129.
- Select a Child Restraint System based on your child's height and weight. The required label or the instructions for use typically provide this information.

- Select a Child Restraint System that fits the vehicle seating position where it will be used.
  For the suitability of Child Restraint Systems on the vehicle's seating positions, please refer to the installation tables on pages 3-39 and 3-40 to 3-42.
- Read and comply with the warnings and instructions for installation and use provided with the Child Restraint System.

Child Restraint System types

There are three main types of Child Restraint Systems: rearward-facing, forward-facing and booster Child Restraint Systems.
They are classified according to the child's age, height and weight.

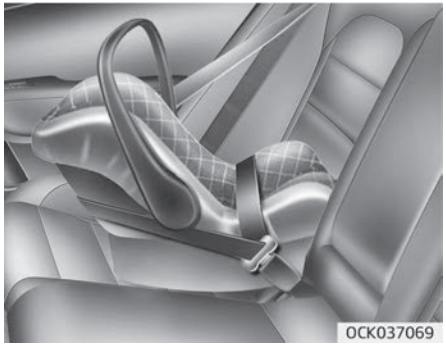

Rearward-facing Child Restraint System

A rearward-facing Child Restraint System provides restraint with the seating surface against the back of the child. The harness system holds the child in place, and in an accident, acts to keep the child positioned in the Child Restraint Systems and reduce the stress to the fragile neck and spinal cord.

All children under the age of one year must always ride in a rearward-facing Child Restraint System. There are different types of rearward-facing Child Restraint Systems: infant-only Child Restraint Systems can only be used rearward-facing. Convertible and 3-in-1 Child Restraint Systems typically have higher height and weight limits for the rearward-facing position, allowing you to keep your child rearward-facing for a longer period of time.
Keep using Child Restraint Systems in the rearward-facing position as long as children fit within the height and weight limits allowed by the Child Restraint System's manufacturer.



Forward-facing Child Restraint System

A forward-facing Child Restraint System provides restraint for the child's body with a harness. Keep children in a forward-facing Child Restraint System with a harness until they reach the top height or weight limit allowed by your Child Restraint System's manufacturer.
Once your child outgrows the forward-facing Child Restraint System, your child is ready for a booster seat.

Booster seats

A booster seat is a Child Restraint System designed to improve the fit of the vehicle's seat belt system. A booster seat positions the seat belt so that it fits properly over the stronger parts of your child's body. Keep your children in booster seats until they are big enough to fit in a seat belt properly.
For a seat belt to fit properly, the lap belt must lie comfortable across the upper thighs, not the stomach. The shoulder belt should lie comfortable across the shoulder and chest and not across the neck or face. Children under age 13 must always be properly restrained to minimize the risk of injury in an accident, sudden stop or sudden maneuver.

Installing a Child Restraint System (CRS)

⚠ WARNING

Before installing your Child Restraint System always:
Read and follow the instructions provided by the manufacturer of the Child Restraint System.
Failure to follow all warnings and instructions could increase the risk of the SERIOUS INJURY or DEATH if an accident occurs.

⚠ WARNING

If the vehicle headrest prevents proper installation of a Child Restraint System, the headrest of the respective seating position shall be readjusted or entirely removed.

After selecting a proper Child Restraint System for your child and checking that the Child Restraint System fits properly on the seating position, there are three general steps for a proper installation:

- **Properly secure the Child Restraint System to the vehicle.** All Child Restraint Systems must be secured to the vehicle with the lap belt or lap part of a lap/shoulder belt or with the ISOFIX toptether and/or ISOFIX anchorage and/or with the support leg.
- **Make sure the Child Restraint System is firmly secured.** After installing a Child Restraint System to the vehicle, push and pull the seat forward and from side-to-side to verify that it is securely attached to the seat. A Child Restraint System secured with a seat belt should be installed as firmly as possible. However, some side-to-side movement can be expected. When installing a Child Restraint System, adjust the vehicle seat and seatback (up and down, forward and rearward) so that your child fits in the Child Restraint System in a comfortable manner.
- **Secure the child in the Child Restraint System.** Make sure the child is properly strapped in the Child Restraint System according to the Child Restraint System manufacturer's instructions.

⚠ CAUTION

A Child Restraint System in a closed vehicle can become very hot. To prevent burns, check the seating surface and buckles before placing your child in the Child Restraint System.

ISOFIX anchorage and top-tether anchorage (ISOFIX anchorage system) for children

The ISOFIX system holds a Child Restraint System during driving and in an accident. This system is designed to make installation of the Child Restraint System easier and reduce the possibility of improperly installing your Child Restraint System. The ISOFIX system uses anchors in the vehicle and attachments on the Child Restraint System. The ISOFIX system eliminates the need to use seat belts to secure the Child Restraint System to the rear seats.
ISOFIX anchorages are metal bars built into the vehicle. There are two lower anchors for each ISOFIX seating position that will accommodate a Child Restraint System with lower attachments.

To use the ISOFIX system in your vehicle, you must have a Child Restraint System with ISOFIX attachments.
The Child Restraint System manufacturer will provide you with instructions on how to use the Child Restraint System with its attachments for the ISOFIX anchorages.

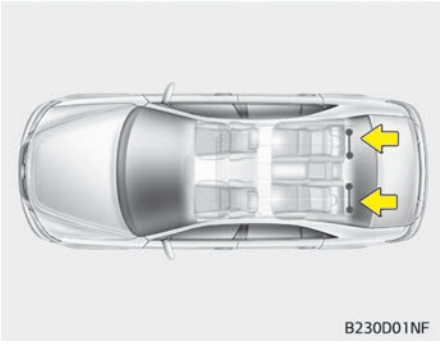

ISOFIX anchorages have been provided in the left and right outboard rear seating positions. Their locations are shown in the illustration.

⚠ WARNING

Do not attempt to install a Child Restraint System using ISOFIX anchorages in the rear center seating position. There are no ISOFIX anchorages provided for this seat. Using the outboard seat anchorages, for the CRS installation on the rear center seating position, can damage the anchorages.

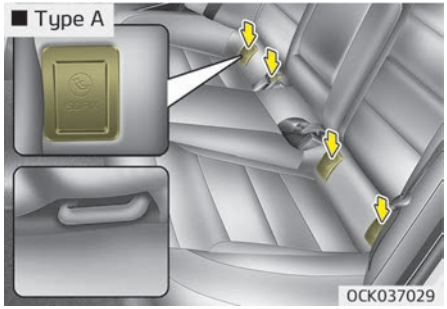

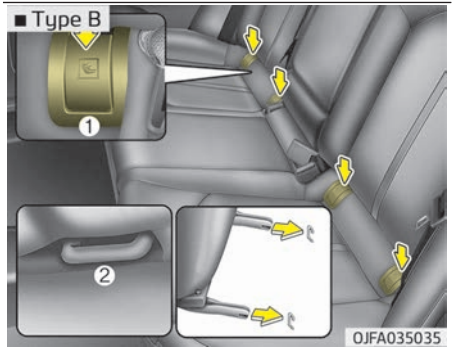

ISOFIX anchorages are located between the seatback and the seat cushion of the rear seat left and right outboard seating positions, indicated by the symbols.

To use the ISOFIX anchorages, push the upper portion of the ISOFIX anchorage cover.

✻ 1. ISOFIX Anchor Position Indicator (Type A-, Type B-)

2. ISOFIX Anchor

Securing a Child Restraint System with the "ISOFIX Anchorage System"

To install an i-Size or ISOFIX-compatible Child Restraint System in either of the rear outboard seating positions:

1. Move the seat belt buckle away from the ISOFIX anchorages.
2. Move any other objects away from the anchorages that could prevent a secure connection between the Child Restraint System and the ISOFIX anchorages.
3. Place the Child Restraint System on the vehicle seat, then attach the seat to the ISOFIX anchorages according to the instructions provided by the Child Restraint System manufacturer.
4. Follow the instructions of the Child Restraint System's manufacturer for proper installation and connection of the ISOFIX attachments on the Child Restraint System to the ISOFIX anchorages.

⚠ WARNING

Take the following precautions when using the ISOFIX system:

- **Read and follow all installation instructions provided with your Child Restraint System.**
- **To prevent the child from reaching and taking hold of unretracted seat belts, buckle all unused rear seat belts and retract the seat belt webbing behind the child. Children can be strangled if a shoulder belt becomes wrapped around their neck and the seat belt tightens.**
- **NEVER attach more than one Child Restraint System to a single anchorage. This could cause the anchor or attachment to come loose or break.**
- **Always have the ISOFIX system inspected by your dealer after an accident. An accident can damage the ISOFIX system and may not properly secure the Child Restraint System.**

Securing a Child Restraint System seat with "Top-tether Anchorage" system (if equipped)

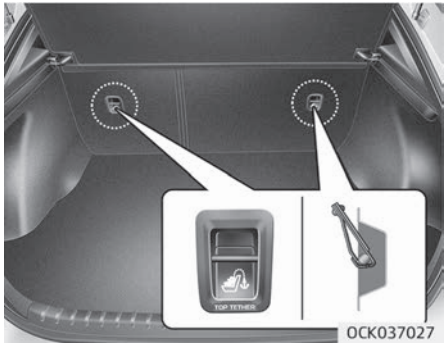

Top-tether anchorages for Child Restraint Systems are located on the back of the rear seatbacks.

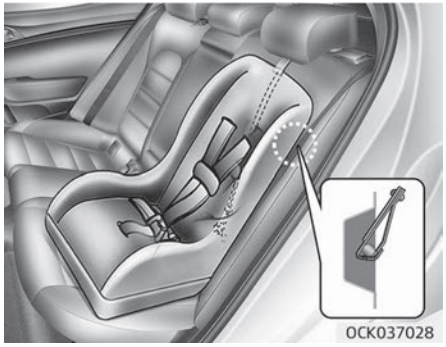

1. Route the Child Restraint System top-tether strap over the seatback. Placing the top tether strap, please follow the instructions of the Child Restraint System manufacturer.
2. Connect the top-tether strap to the top-tether anchorage, then tighten the top-tether strap according to the instructions of your Child Restraint System's manufacturer to firmly attach the Child Restraint System to the seat.

⚠ WARNING

Take the following precautions when installing the top-tether:

- **Read and follow all installation instructions provided with your Child Restraint System.**
- **NEVER attach more than one Child Restraint System to a single ISO-FIX top-tether anchorage. This could cause the anchorage or attachment to come loose or break.**
- **Do not attach the top-tether to anything other than the correct top-tether anchorage. It may not work properly if attached to something else.**
- **Child Restraint System anchorages are designed to withstand only those loads imposed by correctly fitted Child Restraint System. Under no circumstances are they to be used for adult seat belts or harnesses or for attaching other items or equipment to the vehicle.**

Suitability of each seating position for ISOFIX Child Restraint Systems according to ECE regulations

Mass Group	Size Class	Fixture	Vehicle ISOFIX positions			
			1st	2nd row		
			Passenger	Left Hand	Center	Right Hand
Carrycot	F	ISO/L1	N/A	X	N/A	X
	G	ISO/L2	N/A	X	N/A	X
0: UP to 10 kg	E	ISO/R1	N/A	IL	N/A	IL
0+: UP to 13 kg	E	ISO/R1	N/A	IL	N/A	IL
	D	ISO/R2	N/A	IL	N/A	IL
	C	ISO/R3	N/A	IL	N/A	IL
I: 9 to 18 kg	D	ISO/R2	N/A	IL	N/A	IL
	C	ISO/R3	N/A	IL	N/A	IL
	B	ISO/F2	N/A	IUF	N/A	IUF
	B1	ISO/F2X	N/A	IUF	N/A	IUF
	A	ISO/F3	N/A	IUF	N/A	IUF

IUF = suitable for ISOFIX forward child restraints systems of universal category approved for use in the mass group.
IL = suitable for particular ISOFIX child restraints systems (CRS) given in the attached list. These ISOFIX CRS are those of the "specific vehicle", "restricted" or "semi-universal" categories.
X = ISOFIX position not suitable for ISOFIX child restraint system in this mass group and/or this size class.

Securing a Child Restraint System with a lap/shoulder belt

When not using the ISOFIX system, all Child Restraint Systems must be secured to a rear seat with the lap part of a lap/shoulder belt.

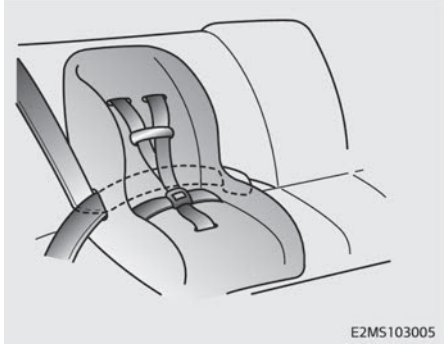

Installing a Child Restraint System with a lap/shoulder belt

To install a Child Restraint System on the rear seats, do the following:

1. Place the Child Restraint System on a rear seat and route the lap/shoulder belt around or through the Child Restraint System, following the Child Restraint System manufacturer's instructions.
   Make sure the seat belt webbing is not twisted.



2. Fasten the lap/shoulder belt latch into the buckle. Listen for the distinct "click" sound. Position the release button so that it is easy to access in case of an emergency.

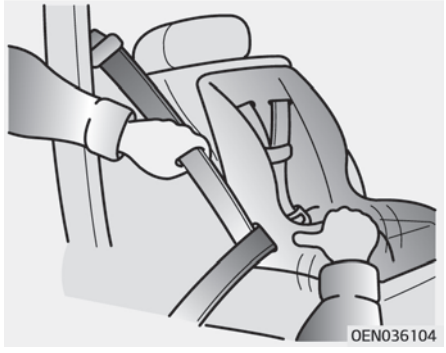

3. Remove as much slack from the belt as possible by pushing down on the Child Restraint System while feeding the shoulder belt back into the retractor.
4. Push and pull on the Child Restraint System to confirm that the seat belt is holding it firmly in place.

If your Child Restraint System manufacturer recommends the use of a top-tether with the lap/shoulder belt, see "Top-tether Anchorage system" on page 3-36.
To remove the Child Restraint System, press the release button on the buckle and then pull the lap/shoulder belt out of the Child Restraint System and allow the seat belt to retract fully.

Suitability of each seating position for "universal" category belted Child Restraint Systems according to ECE regulations (For Europe)

Use child safety seats that have been officially approved and are appropriate for your children. When using the child safety seats, refer to the following table.

Mass Group		Seating Position				
		Front Passenger		Second Row		
		Airbag activated	Airbag deactivated	Outboard Left	Center	Outboard Right
Group 0 (0-9months)	up to 10kg	X	U*	U	U**	U
Group 0 + (0-2years)	up to 13kg	X	U*	U	U**	U
Group I (9months-4years)	9 to 18kg	X	U*	U	U**	U
Group II (15 to 25kg)	15 to 25kg	UF*	U*	U	U	U
Group III (22 to 36kg)	22 to 36kg	UF*	U*	U	U	U

U = Suitable for "universal" category Child Restraint Systems approved for use in this mass group.
UF = Suitable for forward facing "universal" category restraints approved for use in this mass group.
X = Seat position not suitable for children in this mass group.

* = When you install the child seat on Front Passenger seat, you should move the seat position to upward and the seat back position to forward properly, to restrain the child seat (Height adjustable device of Front Passenger seat is an optional feature)

** = Seating position not suitable for fitment of Child Restraint Systems with support leg.

Suitability of each seating position for "universal" category belted Child Restraint Systems according to ECE regulations (Except Europe)

Use child safety seats that have been officially approved and are appropriate for your children. When using the child safety seats, refer to the following table.

Mass Group		Seating Position			
		Front Passenger	Second Row		
		Airbag activated	Outboard Left	Center	Outboard Right
Group 0 (0-9months)	up to 10kg	X	U	U**	U
Group 0 + (0-2years)	up to 13kg	X	U	U**	U
Group I (9months-4years)	9 to 18kg	X	U	U**	U
Group II (15 to 25kg)	15 to 25kg	UF*	U	U	U
Group III (22 to 36kg)	22 to 36kg	UF*	U	U	U

U = Suitable for "universal" category Child Restraint Systems approved for use in this mass group.
UF = Suitable for forward facing "universal" category restraints approved for use in this mass group.
X = Seat position not suitable for children in this mass group.

* = When you install the child seat on Front Passenger seat, you should move the seat position to upward and the seat back position to forward properly, to restrain the child seat (Height adjustable device of Front Passenger seat is an optional feature)

** = Seating position not suitable for fitment of Child Restraint Systems with support leg.

i-Size Child Restraint Systems according to ECE regulations

Mass Group	Seating Position			
	Front Passenger Outboard	Second Row		
		Outboard Left	Centre	Outboard Right
i-size Child Restraints Systems	X	i-U	X	i-U

i-U = Suitable for i-Size "universal" Child Restraints Systems forward and rearward facing.
i-UF = Suitable for forward-facing i-Size "universal" Child Restraints Systems only.
X = Seat position not suitable for i-size CRS.

Recommended child restraint systems - For Europe

Mass Group	Name	Manufac-turer	Type of Fixation	ECE-R44/ R129 Ap-proval No.
Group 0+	Cabriofix & Familyfix	Maxi Cosi	ISOFIX	E4 04443907
Group I	Duo Plus	Britax Rö-mer	ISOFIX and top-tether	E1 04301133
Group II	KidFix II XP	Britax Rö-mer	ISOFIX and vehicle Belt	E1 04301323
Group III	Dream	Nania/ OSANN	Vehicle Belt	E2 0403011

CRS Manufacturer information

Maxi Cosi Cabriofix & Familyfix	http://www.maxi-cosi.com
Britax Römmer	http://www.britax.com
OSANN	http://www.osann.de

AIR BAG - SUPPLEMENTAL RESTRAINT SYSTEM (IF EQUIPPED)

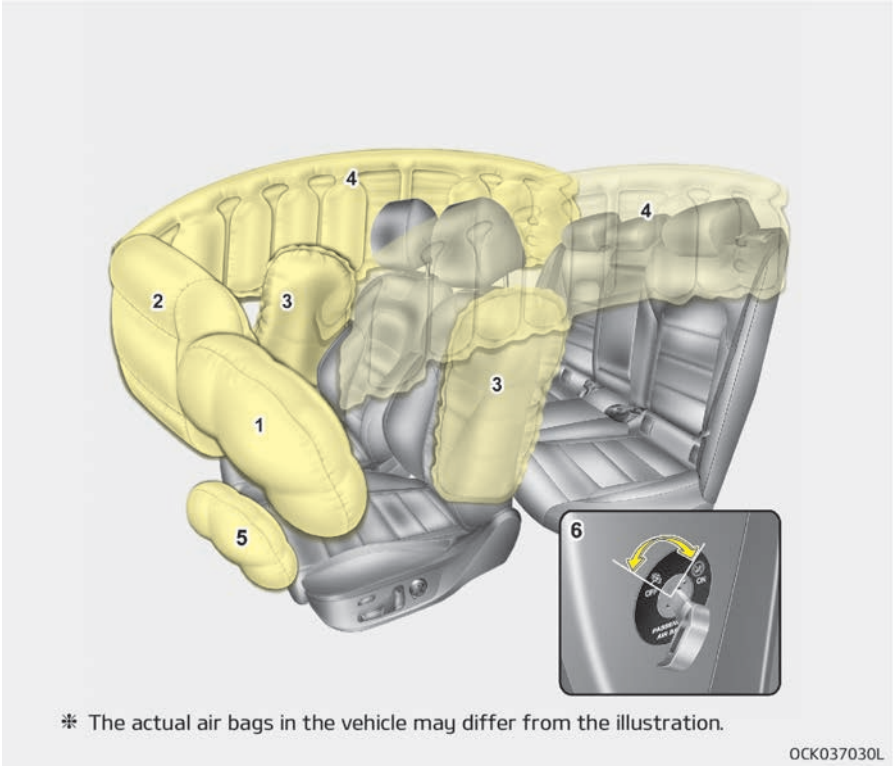

❈ The actual air bags in the vehicle may differ from the illustration.

OCK037030L

1. Driver's front air bag
2. Passenger's front air bag
3. Side air bag
4. Curtain air bag
5. Driver's knee air bag
6. Passenger's front air bag ON/OFF switch*

⚠ WARNING

- **Even in vehicles with air bags, you and your passengers must always wear the safety belts provided in order to minimize the risk and severity of injury in the event of a collision or rollover.**
- **SRS and pretensioners contain explosive chemicals.**
  If scrapping a vehicle without removing SRS and pretensioners from a vehicle, it may cause fire. Before scrapping a vehicle, contact a professional workshop. Kia recommends to visit an authorized Kia dealer/service partner.

(Continued)

*: if equipped

(Continued)

- **Keep the SRS parts and wirings away from water or any liquid. If the SRS components are inoperative due to exposure to water or liquids, it may cause fire or severe injury.**

How does the air bag system operate

- Air bags are activated (able to inflate if necessary) only when the Engine start/stop button is turned to the ON position.
- Air bags inflate instantly in the event of a serious frontal collision or side collision (if equipped with side air bag or curtain air bag) in order to help protect the occupants from serious physical injury.

✻ NOTICE

■ if equipped with rollover sensor

(Continued)

(Continued)

Also, the air bags inflate instantly in the event of a rollover (if equipped with a side air bag or curtain air bag) in order to help protect the occupants from serious physical injury.

- There is no single speed at which the air bags will inflate.
  Generally, air bags are designed to inflate based upon the severity of a collision and its direction. These two factors determine whether the sensors produce an electronic deployment/ inflation signal.
- Air bag deployment depends on a number of factors including vehicle speed, angles of impact and the density and stiffness of the vehicles or objects which your vehicle hits in the collision. The determining factors are not limited to those mentioned above.
- The front air bags will completely inflate and deflate in an instant.
  It is virtually impossible for you to see the air bags inflate during an accident.
  It is much more likely that you will simply see the deflated air bags hanging out of their storage compartments after the collision.
- In order to help provide protection in a severe collision, the air bags must inflate rapidly. The speed of air bag inflation is a consequence of the extremely short time in which a collision occurs and the need to inflate the air bag between the occupant and the vehicle structures before the occupant impacts those structures.
  This speed of inflation reduces the risk of serious or life-threatening injuries in a severe collision and is thus a necessary part of air bag design.
  However, air bag inflation can also cause injuries which can include facial abrasions, bruises and broken bones because the inflation speed also causes the air bags to expand with a great deal of force.

- There are even circumstances under which contact with the steering wheel air bag can cause fatal injuries, especially if the occupant is positioned excessively close to the steering wheel.

⚠ WARNING

- **To avoid severe personal injury or death caused by deploying air bags in a collision, the driver should sit as far back from the steering wheel air bag as possible (at least 250 mm (10 inches) away). The front passengers should always move their seats as far back as possible and sit back in their seat.**
- **Air bags inflate instantly in the event of a collision, and passengers may be injured by the air bag expansion force if they are not in a proper position.**
- **Air bag inflation may cause injuries including facial or bodily abrasions, injuries from broken glasses or burns.**

Noise and smoke

When the air bags inflate, they make a loud noise and they leave smoke and powder in the air inside of the vehicle. This is normal and is a result of the ignition of the air bag inflator. After the air bag inflates, you may feel substantial discomfort in breathing due to the contact of your chest with both the seat belt and the air bag, as well as from breathing the smoke and powder. Open your doors and/or windows as soon as possible after the impact in order to reduce discomfort and prevent prolonged exposure to smoke and powder.

Though the smoke and powder are non-toxic, they may cause irritation to the skin (eyes, nose and throat, etc). If this is the case, wash and rinse with cold water immediately and consult a doctor if the symptom persists.

⚠ WARNING

- **When the air bags deploy, the air bag related parts in the steering wheel, instrument panel, front seats and/or in both sides of the roof rails above the front and rear doors are very hot. To prevent injury, do not touch the air bag storage area's internal components immediately after an air bag has inflated.**
- **Do not install or place any accessories near air bag deployment areas, such as the instrument panel, windows, pillars, and roof rails.**

Front passenger's air bag warning label for child restraint system

■ Type A



OYDESA2042

■ Type B



OHM036053L

⚠ WARNING

Never place a rear facing child restraint in the front passenger seat, unless the passenger-side air bag is deactivated. An inflating passenger-side air bag could impact the rear-facing child restraint and kill the child.

In addition, we recommend that you do not place front-facing child restraints in the front passenger's seat either. If the front passenger air bag inflates, it could cause serious or fatal injuries to the child.
If your vehicle is equipped with the passenger's front air bag ON/OFF switch, you can activate or deactivate the front passenger's air bag when necessary.
For more details, please refer to "Passenger's front air bag ON/OFF switch" on page 3-52.

⚠ WARNING

- **NEVER use a rearward facing child restraint on a seat protected by an ACTIVE AIR BAG in front of it, DEATH or SERIOUS INJURY to the CHILD can occur.**
- **When children are seated in the rear outboard seats of a vehicle equipped with side and/or curtain air bags, be sure to install the child restraint system as far away from the door side as possible, and securely lock the child restraint system in position.**
  Inflation of side and/or curtain air bags could cause serious injury or death to an infant or child.

Air bag warning light



The purpose of the air bag warning light in your instrument panel is to alert you of a potential problem with your air bag - Supplemental Restraint System (SRS).
When the Engine start/stop button is turned ON, the warning light should illuminate for approximately 6 seconds, then go off.
Have the system checked if:

- The light does not turn on briefly when you turn the Engine start/stop button to ON position.
- The light stays on after illuminating for approximately 6 seconds.
- The light comes on while the vehicle is in motion.
- The light blinks when the Engine start/stop button is in ON position.

Passenger's front air bag ON indicator (if equipped)

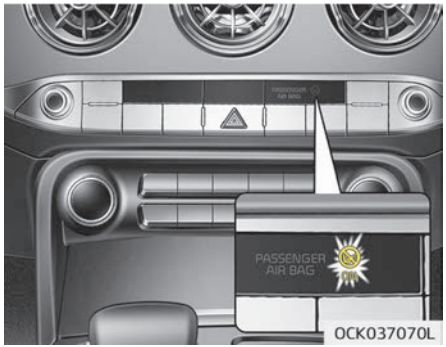

The passenger's front air bag ON indicator illuminates for approximately 4 seconds after the Engine start/stop button is turned to the ON position.

The passenger's front air bag ON indicator also comes on when the passenger's front air bag ON/OFF switch is set to the ON position and goes off after approximately 60 seconds.

Passenger's front air bag OFF indicator (if equipped)

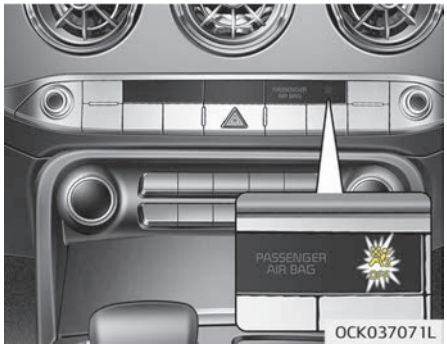

The passenger's front air bag OFF indicator illuminates for about 4 seconds after the Engine start/stop button is turned to the ON position..

The passenger's front air bag OFF indicator also comes on when the passenger's front air bag ON/OFF switch is set to the OFF position and goes off when the passenger's front air bag ON/OFF switch is set to the ON position.

⚠ CAUTION

If the passenger's front air bag ON/OFF switch malfunctions, the passenger's front air bag OFF indicator will not illuminate (The passenger's front air bag ON indicator comes on and goes off after approximately 60 seconds) and the passenger's front air bag will inflate in a frontal impact even if the passenger's front air bag ON/OFF switch is set to the OFF position.
In this case, have the passenger's front air bag ON/OFF switch and the SRS air bag system inspected by a professional workshop.
Kia recommends to visit an authorized Kia dealer/service partner.

SRS components and functions

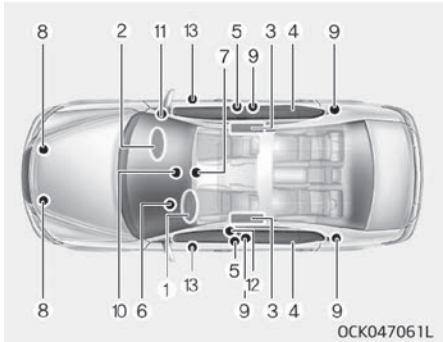

The SRS consists of the following components:

1. Driver's front air bag module
2. Passenger's front air bag module
3. Side air bag modules
4. Curtain air bag modules
5. Retractor pre-tensioner assemblies
6. Air bag warning light
7. SRS control module (SRSCM)/Rollover sensor*
8. Front impact sensors
9. Side impact sensors
10. Passenger's front air bag ON/OFF indicator (front passenger's seat only)*
11. Passenger's front air bag ON/OFF switch*
12. Driver's front anchor pre-tensioner*
13. Side pressure sensors

The SRSCM continually monitors all SRS components while the Engine start/stop button is ON to determine if a crash impact is severe enough to require air bag deployment or pre-tensioner seat belt deployment.
The SRS air bag warning light on the instrument panel will illuminate for about 6 seconds after the Engine start/stop button is turned to the ON position, after which the SRS air bag warning light should go out.

⚠ WARNING

If any of the following conditions occurs, this indicates a malfunction of
(Continued)

*: if equipped

*: if equipped

(Continued)

the SRS. In this case, have the system inspected by a professional workshop. Kia recommends to visit an authorized Kia dealer/service partner.

- **The light does not turn on briefly when you turn the Engine start/stop button to ON position.**
- **The light stays on after illuminating for approximately 6 seconds.**
- **The light comes on while the vehicle is in motion.**
- **The light blinks when the Engine start/stop button is in ON position.**

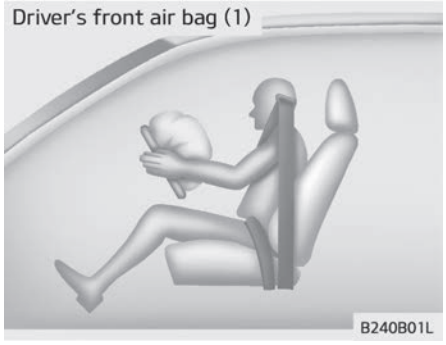

The front air bag modules are located in the center of the steering wheel, in the front passenger's panel above the glove box and/or in the driver's side knee bolster. When the SRSCM detects a sufficiently severe impact to the front of the vehicle, it will automatically deploy the front air bags.

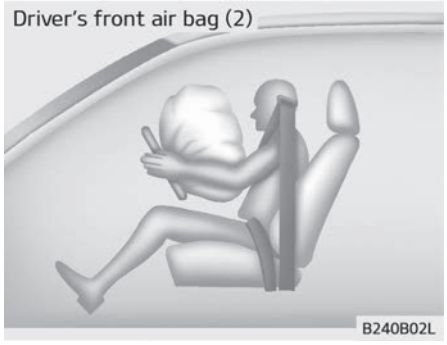

Upon deployment, tear seams molded directly into the pad covers will separate under pressure from the expansion of the air bags. Further opening of the covers then allows full inflation of the air bags.

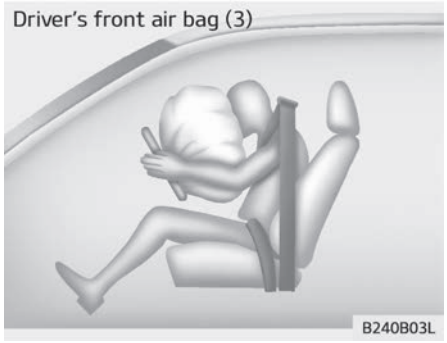

A fully inflated air bag, in combination with a properly worn seat belt, slows the driver's or the passenger's forward motion, reducing the risk of head and chest injury.

After complete inflation, the air bag immediately starts deflating, enabling the driver to maintain forward visibility and the ability to steer or operate other controls.



⚠ WARNING

- **Do not install or place any accessories (drink holder, CD holder, sticker, etc.) on the front passenger's panel above the glove box in a vehicle with a passenger's air bag. Such objects may become dangerous projectiles and cause injury if the passenger's air bag inflates.**

(Continued)

(Continued)

- **When installing a container of liquid air freshener inside the vehicle, do not place it near the instrument cluster nor on the instrument panel surface.**
  It may become a dangerous projectile and cause injury if the passenger's air bag inflates.

⚠ WARNING

- **If an air bag deploys, there may be a loud noise followed by a fine dust released in the vehicle. These conditions are normal and are not hazardous – the air bags are packed in this fine powder. The dust generated during air bag deployment may cause skin or eye irritation as well as aggravate asthma for some persons. Always wash all exposed skin areas thoroughly with cold water and mild soap after an accident in which the air bags were deployed.**

(Continued)

(Continued)

- **The SRS can function only when the Engine start/stop button is in the ON position. If the SRS air bag warning light does not illuminate, or continuously remains on after illuminating for about 6 seconds when the Engine start/stop button is turned to the ON position, or after the engine is started, comes on while driving, the SRS is not working properly. In this case, have the system inspected by a professional workshop. Kia recommends to visit an authorized Kia dealer/service partner.**
- **Before you replace a fuse or disconnect a battery terminal, turn the Engine start/stop button to the OFF position Never remove or replace the air bag related fuse(s) when the Engine start/stop button is in the ON position. Failure to heed this warning will cause the SRS air bag warning light to illuminate.**

Driver's and passenger's front air bag



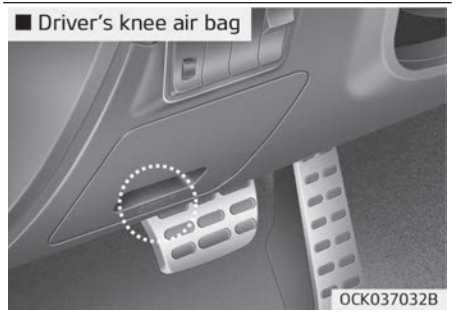

Your vehicle is equipped with a Supplemental Restraint (Air Bag) System and the lap/shoulder belts at both the driver and passenger seating positions.

The indications of the system's presence are the letters "AIRBAG" embossed on the air bag pad cover in the steering wheel and/or on the cover of the driver's side knee bolster located below the steering wheel and the passenger's side front panel pad above the glove box.

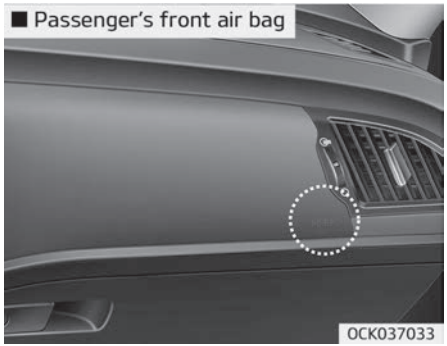

The SRS consists of air bags installed under the pad covers in the center of the steering wheel, in the knee bolster below the steering wheel column and the passenger's side front panel above the glove box.

The purpose of the SRS is to provide the vehicle's driver and/or the front passenger with additional protection than that offered by the seat belt system alone in case of a frontal impact of sufficient severity. The SRS uses sensors to gather information about the driver's seat position, the driver's and front passenger's seat belt usage and impact severity.
The seat belt buckle sensors (if equipped) determine if the driver and front passenger's seat belts are fastened. These sensors provide the ability to control the SRS deployment based on whether or not the seat belts are fastened, and how severe the impact is.

⚠ WARNING

Always use seat belts and child restraints – every trip, every time, everyone! Air bags inflate with considerable force and in the blink of an eye. Seat belts help keep occupants in proper position to obtain maximum benefit from the air bag. Even with air bags, improperly and unbelted occupants can be severely in-

(Continued)

(Continued)

jured when the air bag inflates. Always follow the precautions about seat belts, air bags and occupant safety contained in this manual.
To reduce the chance of serious or fatal injuries and receive the maximum safety benefit from your restraint system:

- **Never place a child in any child or booster seat in the front seat.**
- **ABC – Always Buckle Children in the 2nd row seat. It is the safest place for children of any age to ride.**
- **Front and side air bags can injure occupants improperly positioned in the front seats.**
- **Move your seat as far back as practical from the front air bags, while still maintaining control of the vehicle.**
- **You and your passengers should never sit or lean unnecessarily close to the air bags. Improperly positioned drivers and passengers can be severely injured by inflating air bags.**

(Continued)

(Continued)

- **Never lean against the door or center console – always sit in an upright position.**
- **Do not allow a passenger to ride in the front seat when the passenger's front air bag OFF indicator is illuminated, because the air bag will not deploy in the event of a moderate or severe frontal crash.**
- **No objects should be placed over or near the air bag modules on the steering wheel, instrument panel or the front passenger's panel above the glove box, because any such object could cause harm if the vehicle is in a crash severe enough to cause the air bags to deploy.**
- **Do not tamper with or disconnect SRS wiring or other components of the SRS system. Doing so could result in injury, due to accidental deployment of the air bags or by rendering the SRS inoperative.**

(Continued)

(Continued)

- If the SRS air bag warning light remains illuminated while the vehicle is being driven, have the system inspected by a professional workshop. Kia recommends to visit an authorized Kia dealer/service partner.
- Air bags can only be used once – have the system replaced by a professional workshop.
  Kia recommends to visit an authorized Kia dealer/service partner.
- The SRS is designed to deploy the front air bags only when an impact is sufficiently severe and when the impact angle is less than 30° from the forward longitudinal axis of the vehicle. Additionally, the air bags will only deploy once. Seat belts must be worn at all times.
- Front air bags are not intended to deploy in side-impact, rear-impact or rollover crashes. In addition, front air bags will not deploy in frontal crashes below the deployment threshold.

(Continued)

(Continued)

- A child restraint system must never be placed in the front seat. The infant or child could be severely injured or killed by an air bag deployment in case of an accident.
- Children age 12 and under must always be properly restrained in the rear seat. Never allow children to ride in the front passenger seat. If a child over 12 must be seated in the front seat, he or she must be properly belted and the seat should be moved as far back as possible.
- For maximum safety protection in all types of crashes, all occupants including the driver should always wear their seat belts whether or not an air bag is also provided at their seating position to minimize the risk of severe injury or death in the event of a crash.
  Do not sit or lean unnecessarily close to the air bag while the vehicle is in motion.

(Continued)

(Continued)

- Sitting improperly or out of position can result in serious or fatal injury in a crash. All occupants should sit upright with the seat back in an upright position, centered on the seat cushion with their seat belt on, legs comfortably extended and their feet on the floor until the vehicle is parked and the Engine start/stop button is in the OFF position.
- The SRS air bag system must deploy very rapidly to provide protection in a crash. If an occupant is out of position because of not wearing a seat belt, the air bag may forcefully contact the occupant causing serious or fatal injuries.

Passenger's front air bag ON/OFF switch (if equipped)

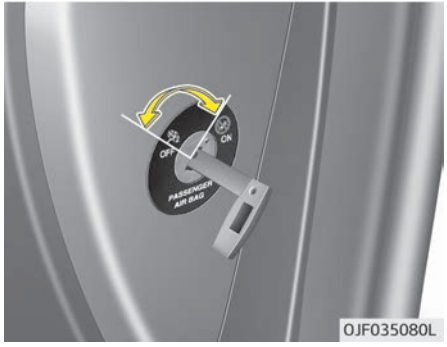

The passenger's front air bag can be deactivated by the passenger's front air bag ON/OFF switch if a child restraint is installed on the front passenger's seat or if the front passenger's seat is unoccupied by a person.
To ensure the safety of your child, the passenger's front air bag must be deactivated when it should be necessary to install a rearward facing child seat on the front passenger seat in exceptional circumstances.

To deactivate or reactivate the passenger's front air bag

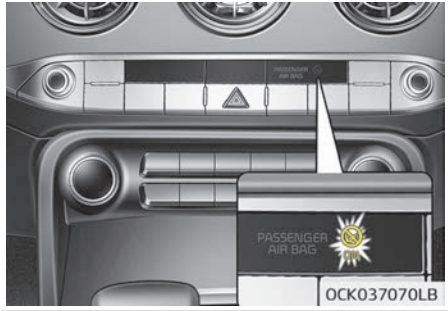

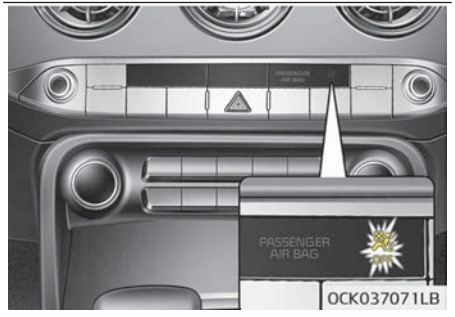

To deactivate the passenger's front air bag, insert the master key into the passenger's front air bag ON/OFF switch and turn it to the OFF position.
The passenger's front air bag OFF indicator will illuminate and stay on until the passenger's front air bag is reactivated.
To reactivate the passenger's front air bag, insert the master key into the passenger's front air bag ON/OFF switch and turn it to the ON position.
The passenger's front air bag OFF indicator will go out.

⚠ WARNING

The front air bag ON/OFF switch could turn by using a similar small rigid device. Always check the status of the front air bag ON/OFF switch and passenger's front air bag OFF indicator.

✻ NOTICE

- When the passenger's front air bag ON/OFF switch is set to the ON position, the passenger's front air bag is activated and child or infant seat should not be installed on the front passenger seat.
- When the passenger's front air bag ON/OFF switch is set to the OFF position, the passenger's front air bag is deactivated.

⚠ CAUTION

- **If the passenger's front air bag ON/OFF switch is not working properly, the air bag warning light ( ) on the instrument panel will illuminate.**
  And, the passenger's front air bag OFF indicator ( ) will not illuminate (The passenger's front air bag ON indicator comes on and goes off after approximately 60 seconds), the SRS Control Module reactivates the passenger's front air bag and the passenger's front air bag will inflate in frontal impact crashes even if the passenger's front air bag ON/OFF switch is set to the OFF position.
  In this case, have the system inspected by a professional workshop. Kia recommends to visit an authorized Kia dealer/service partner.

(Continued)

(Continued)

- **If the SRS air bag warning light blinks or does not illuminate when the Engine start/stop button is in the ON position, or if it illuminates while the vehicle is being driven, have the system inspected by a professional workshop. Kia recommends to visit an authorized Kia dealer/service partner.**

⚠ WARNING

- **The driver is responsible for the proper position of the passenger's front air bag ON/OFF switch.**
- **Deactivate the passenger's front air bag only when the Engine start/stop button is in the OFF position, or the malfunction may occur in the SRS Control Module.**
  And there may be a danger that the driver's and/or front passenger's and/or side and curtain air bag may fail to trigger, or not trigger correctly during a collision.

(Continued)

(Continued)

- **Never install a rearward facing child seat on the front passenger's seat unless the passenger's front air bag has been deactivated. The infant or child could be severely injured or killed by an air bag deployment in case of an accident.**
- **Even though your vehicle is equipped with the passenger's front air bag ON/OFF switch, do not install a child restraint system in the front passenger's seat. A child restraint system must never be placed in the front seat. Children who are too large for child restraint systems should always occupy the rear seat and use the available lap/shoulder belts. Children are afforded the most safety in the event of an accident when they are restrained by a proper restraint system in the rear seat.**
- **As soon as the child seat is no longer needed on the front passenger's seat, reactivate the front passenger's air bag.**

⚠ WARNING

■ No attaching objects

No objects (such as crash pad cover, cellular phone holder, cup holder, perfume or stickers) should be placed over or near the air bag modules on the steering wheel, instrument panel, windshield glass, and the front passenger's panel above the glove box. Such objects could cause harm if the vehicle is in a crash severe enough to cause the air bags to deploy. Do not place any objects over the air bag or between the air bag and yourself.

Side air bag

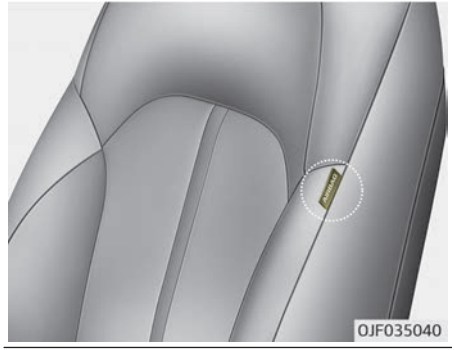

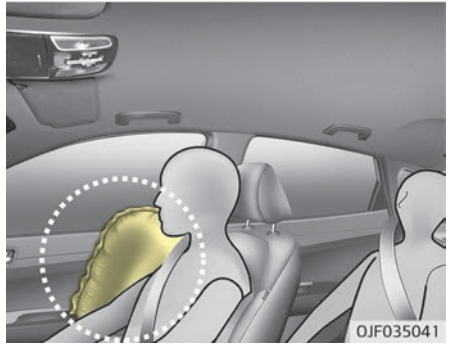

✻ The actual air bags in the vehicle may differ from the illustration.

Your vehicle is equipped with a side air bag in each front seat.
The purpose of the air bag is to provide the vehicle's driver and/or the front passenger with additional protection than that offered by the seat belt alone.
The side air bags are designed to deploy only during certain side-impact collisions, depending on the crash severity, angle, speed and point of impact. However, when side deployment threshold is satisfied at front-impact, side air bags may deploy. The side air bags are not designed to deploy in all side impact or rollover situations.
The side air bags may deploy on the side of the impact or on both side.

✻ NOTICE

■ if equipped with rollover sensor

- Also, both side of the side air bags deploy in certain rollover situations.
- The side air bag may deploy when the rollover sensor detects the situation as a rollover.

⚠ WARNING

Do not allow the passengers to lean their heads or bodies onto doors, put their arms on the doors, stretch their arms out of the window, or place objects between the doors and passengers when they are seated on seats equipped with side and/or curtain air bags.

⚠ WARNING

- **The side air bag is supplemental to the driver's and the passenger's seat belt systems and is not a substitute for them. Therefore your seat belts must be worn at all times while the vehicle is in motion. The air bags deploy only in certain side impact or rollover*1 conditions severe enough to cause significant injury to the vehicle occupants.**

(Continued)

*1 Only vehicle equipped with rollover sensor.

(Continued)

- **For best protection from the side air bag system and to avoid being injured by the deploying side air bag, both front seat occupants should sit in an upright position with the seat belt properly fastened. The driver's hands should be placed on the steering wheel at the 9:00 and 3:00 positions.**
  The passenger's arms and hands should be placed on their laps.
- **Do not use any accessory seat covers.**
- **Use of seat covers could reduce or prevent the effectiveness of the system.**
- **To prevent unexpected deployment of the side air bag that may result in personal injury, avoid impact to the side impact sensor when the Engine start/stop button is in the ON position.**

(Continued)

(Continued)

- **If the seat or seat cover is damaged, have the system serviced by a professional workshop.**
  Kia recommends to visit an authorized Kia dealer/service partner.
- **Never place or insert any object into any small opening near side airbag labels attached to the vehicle seats.**
  When the air bag deploys, the object may affect the deployment and result in unexpected accident or bodily harm.

⚠ WARNING

■ No attaching objects

- **Do not place any objects over the air bag or between the air bag and yourself. Also, do not attach any objects around the area the air bag inflates such as the door, side door glass, front and rear pillar.**

(Continued)

(Continued)

- **Do not place any objects between the door and the seat. They may become dangerous projectiles if the side air bag inflates.**
- **Do not install any accessories on the side or near the side air bags.**

Curtain air bag

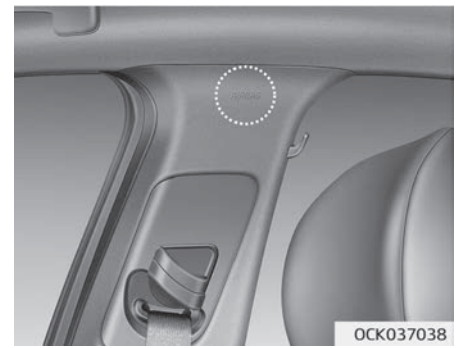

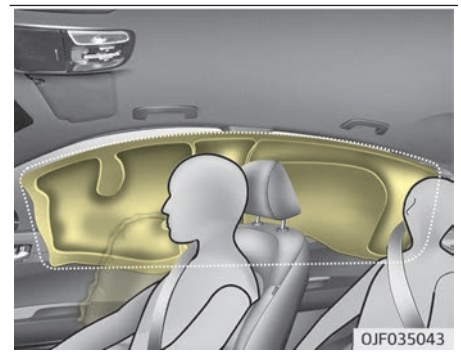

✻ The actual air bags in the vehicle may differ from the illustration.

Curtain air bags are located along both sides of the roof rails above the front and rear doors.
They are designed to help protect the heads of the front seat occupants and the rear outboard seat occupants in certain side impact collisions.
The curtain air bags are designed to deploy during certain side impact collisions, depending on the crash severity, angle, speed and point of impact. However, when side deployment threshold is satisfied at front-impact, side air bags may deploy.
The curtain air bags may deploy on the side of the impact or on both side.
The curtain air bags are not designed to deploy in all side impacts or rollover situations.

✻ NOTICE

■ if equipped with rollover sensor

- Also, both sides of the curtain air bags deploy in certain rollover situations.

(Continued)

(Continued)

- The curtain air bag may deploy when the rollover sensor detects the situation as a rollover.

⚠ WARNING

■ No attaching objects

- **Do not place any objects over the air bag. Also, do not attach any objects around the area the air bag inflates such as the door, side door glass, front and rear pillar, roof side rail.**
- **Do not hang hard or breakable objects on the coat hook.**
- **Do not hang heavy items on the coat hooks for safety reasons.**

⚠ WARNING

- **In order for side and curtain air bags to provide the best protection, front seat occupants and outboard rear occupants should sit in an upright position with the seat belts properly fastened. Importantly, children should sit in a proper child restraint system in the rear seat.**
- **When children are seated in the rear outboard seats, they must be seated in the proper child restraint system. Make sure to position the child restraint system as far away from the door side as possible, and secure the child restraint system in a locked position.**
- **Do not allow the passengers to lean their heads or bodies against doors, put their arms on the doors, stretch their arms out of the window or place objects between the doors and passengers when they are seated on seats equipped with side and curtain air bags.**

(Continued)

(Continued)

- **Never try to open or repair any components of the side curtain air bag system. If necessary, have the system serviced by a professional workshop. Kia recommends to visit an authorized Kia dealer/service partner.**

Failure to follow the above instructions can result in injury or death to the vehicle occupants in an accident.

Why didn't my air bag go off in a collision?

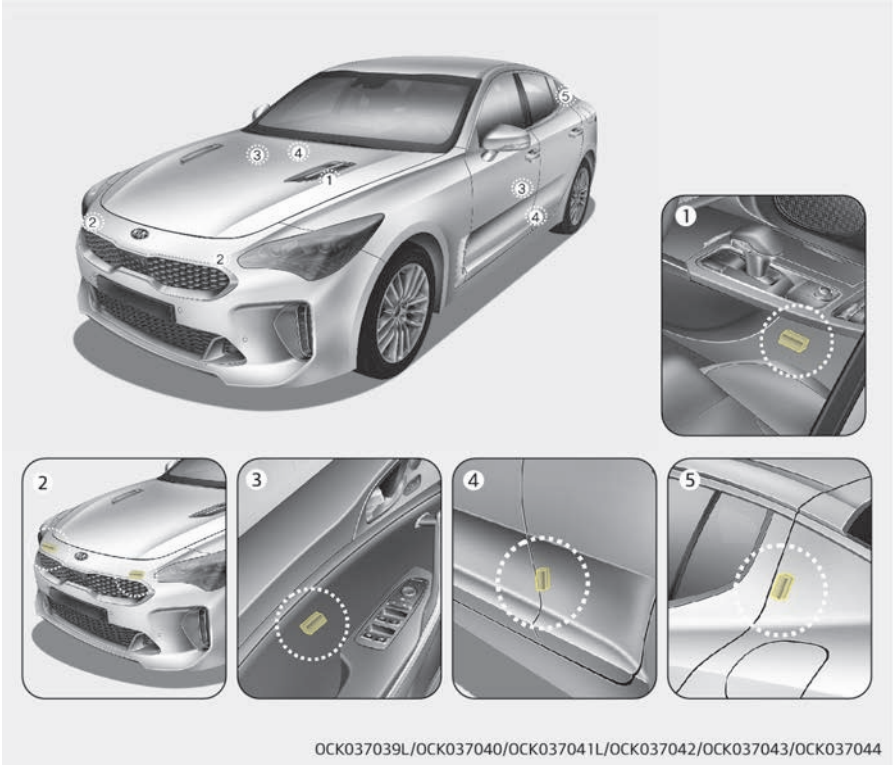

Inflation and non-inflation conditions of the airbag

There are many types of accidents in which the air bag would not be expected to provide additional protection. These include rear impacts, second or third collisions in multiple impact accidents, as well as low speed impacts.

Air bag collision sensors

1. SRS control module/Rollover sensor (if equipped)
2. Front impact sensor
3. Side impact sensor
4. Side impact sensor
5. Side impact sensor

⚠ WARNING

- **Do not hit or allow any objects to impact the locations where air bag or sensors are installed. This may cause unexpected air bag deployment, which could result in serious personal injury or death.**

(Continued)

(Continued)

- **If the installation location or angle of the sensors is altered in any way, the air bags may deploy when they should not or they may not deploy when they should, causing severe injury or death. Therefore, do not try to perform maintenance on or around the air bag sensors. Have the system serviced by a professional workshop. Kia recommends to visit an authorized Kia dealer/service partner.**
- **Problems may arise if the sensor installation angles are changed due to the deformation of the front bumper, body or front door and C pillars where side collision sensors are installed. In this case, have the system serviced by a professional workshop. Kia recommends to visit an authorized Kia dealer/service partner.**

(Continued)

(Continued)

- **Your vehicle has been designed to absorb impact and deploy the air bag(s) in certain collisions. Installing bumper guards or replacing a bumper with non-genuine parts may adversely affect your vehicles collision and air bag deployment performance.**

⚠ WARNING

■ if equipped with rollover sensor

If your vehicle is equipped with side and curtain air bag, set the Engine start/stop button is in the OFF or ACC position when the vehicle is being towed.
The side and curtain air bag may deploy when the Engine start/stop button is ON, and the rollover sensor detects the situation as a rollover.

Air bag inflation conditions

Front air bags

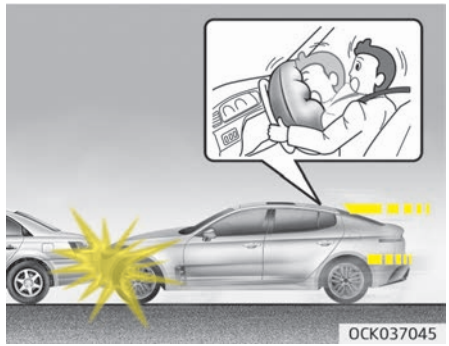

Front air bags are designed to inflate in a frontal collision depending on the intensity, speed or angles of impact of the front collision.

Side and curtain air bags



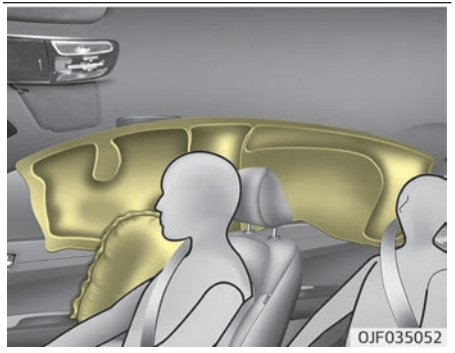

❊ The actual air bags in the vehicle may differ from the illustration.

Side and curtain air bags are designed to inflate when an impact is detected by side collision sensors depending on the strength, speed or angles of impact resulting from a side impact collision.
Although the front air bags (driver's and front passenger's air bags) are designed to inflate only in frontal collisions, they also may inflate in other types of collisions if the front impact sensors detect a sufficient impact. Side air bags (side and/or curtain air bags) are designed to inflate only in side impact collisions, but they may inflate in other collisions if the side impact sensors detect a sufficient impact.
If the vehicle chassis is impacted by bumps or objects on unimproved roads or sidewalks, air bags may deploy. Drive carefully on unimproved roads or on surfaces not designed for vehicle traffic to prevent unintended air bag deployment.

❊ NOTICE

■ If equipped with rollover sensor

(Continued)

(Continued)

Also, the side and curtain air bags are designed to inflate when a rollover is detected by a rollover sensor.

Air bag non-inflation conditions

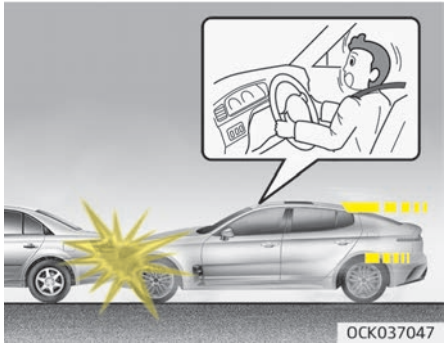

- In certain low-speed collisions the air bags may not deploy. The air bags are designed not to deploy in such cases because they may not provide benefits beyond the protection of the seat belts in such collisions.

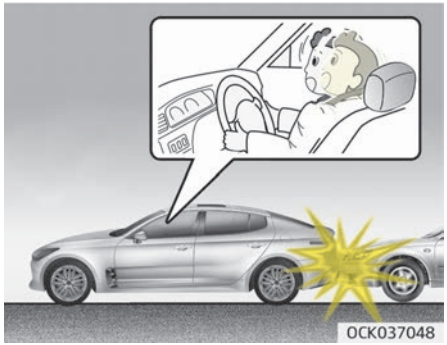

- Air bags are not designed to inflate in rear collisions, because occupants are moved backward by the force of the impact. In this case, inflated air bags would not be able to provide any additional benefit.

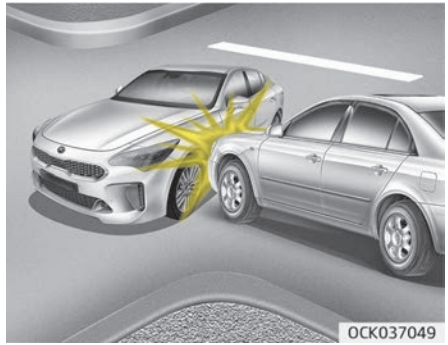

- Front air bags may not inflate in side impact collisions, because occupants move to the direction of the collision, and thus in side impacts, front air bag deployment would not provide additional occupant protection.

- However, if equipped with side and curtain air bags, the air bags may inflate depending on the intensity, vehicle speed and angles of impact.

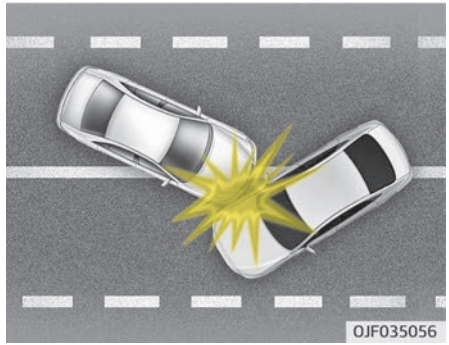

- In an angled collision, the force of impact may direct the occupants in a direction where the air bags would not be able to provide any additional benefit, and thus the sensors may not deploy any air bags.

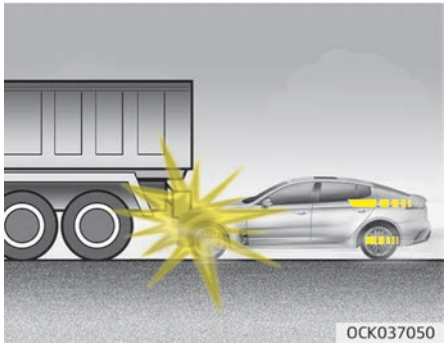

- Just before impact, drivers often brake heavily. Such heavy braking lowers the front portion of the vehicle causing it to “ride” under a vehicle with a higher ground clearance. Air bags may not inflate in this "under-ride" situation because deceleration forces that are detected by sensors may be significantly reduced by such “under-ride” collisions.

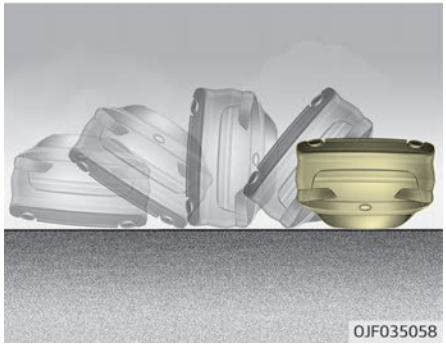

- Front air bags may not inflate in rollover accidents because front air bag deployment would not provide additional occupant protection.

✻ NOTICE

■ if equipped with rollover sensor

However, if equipped with side and curtain air bags, the air bags may inflate in a rollover, when it is detected by the rollover sensor.

✻ NOTICE

■ without rollover sensor

However, side and/or curtain air bags may inflate when the vehicle is rolled over by a side impact collision, if the vehicle is equipped with side air bags and curtain air bags.

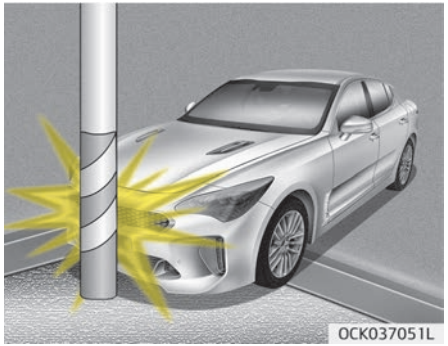

- Air bags may not inflate if the vehicle collides with objects such as utility poles or trees, where the point of impact is concentrated to one area and the full force of the impact is not delivered to the sensors.

SRS care

The SRS is virtually maintenance-free and so there are no parts you can safely service by yourself. If the SRS air bag warning light does not illuminate, or continuously remains on, have the system inspected by a professional workshop. Kia recommends to visit an authorized Kia dealer/service partner.

⚠ WARNING

- **Modification to SRS components or wiring, including the addition of any kind of badges to the pad covers or modifications to the body structure, can adversely affect SRS performance and lead to possible injury.**
- **For cleaning the air bag pad covers, use only a soft, dry cloth or one which has been moistened with plain water. Solvents or cleaners could adversely affect the air bag covers and proper deployment of the system.**

(Continued)

(Continued)

- **No objects should be placed over or near the air bag modules on the steering wheel, instrument panel, and the front passenger's panel above the glove box, because any such object could cause harm if the vehicle is in a crash severe enough to cause the air bags to inflate.**
- **If the air bags inflate, have the system replaced by a professional workshop. Kia recommends to visit an authorized Kia dealer/service partner.**
- **Do not tamper with or disconnect SRS wiring, or other components of the SRS system. Doing so could result in injury, due to accidental inflation of the air bags or by rendering the SRS inoperative.**

(Continued)

(Continued)

- **If components of the air bag system must be discarded, or if the vehicle must be scrapped, certain safety precautions must be observed. An authorized Kia dealer knows these precautions and can give you the necessary information. Failure to follow these precautions and procedures could increase the risk of personal injury.**
- **If your car was flooded and has soaked carpeting or water on flooring, you shouldn't try to start the engine; in this case, have your vehicle inspected by a professional workshop. Kia recommends to contact an authorized Kia dealer/service partner.**

Additional safety precautions

- Never let passengers ride in the cargo area or on top of a folded-down back seat. All occupants should sit upright, fully back in their seats with their seat belts on and their feet on the floor.

- **Passengers should not move out of or change seats while the vehicle is moving.** A passenger who is not wearing a seat belt during a crash or emergency stop can be thrown against the inside of the vehicle, against other occupants, or out of the vehicle.
- **Each seat belt is designed to restrain one occupant.** If more than one person uses the same seat belt, they could be seriously injured or killed in a collision.
- **Do not use any accessories on seat belts.** Devices claiming to improve occupant comfort or reposition the seat belt can reduce the protection provided by the seat belt and increase the chance of serious injury in a crash.
- **Passengers should not place hard or sharp objects between themselves and the air bags.** Carrying hard or sharp objects on your lap or in your mouth can result in injuries if an air bag inflates.
- **Keep occupants away from the air bag covers.** All occupants should sit upright, fully back in their seats with their seat belts on and their feet on the floor. If occupants are too close to the air bag covers, they could be injured if the air bags inflate.
- **Do not attach or place objects on or near the air bag covers.** Any object attached to or placed on the front or side air bag covers could interfere with the proper operation of the air bags.
- **Do not modify the front seats.** Modification of the front seats could interfere with the operation of the supplemental restraint system sensing components or side air bags.
- **Do not place items under the front seats.** Placing items under the front seats could interfere with the operation of the supplemental restraint system sensing components and wiring harnesses.
- **Never hold an infant or child on your lap.** The infant or child could be seriously injured or killed in the event of a crash. All infants and children should be properly restrained in appropriate child safety seats or seat belts in the rear seat.

⚠ WARNING

- **Sitting improperly or out of position can cause occupants to be shifted too close to a deploying air bag, strike the interior structure or be thrown from the vehicle resulting in serious injury or death.**
- **Always sit upright with the seatback in an upright position, centered on the seat cushion with your seat belt on, legs comfortably extended and your feet on the floor.**

Adding equipment to or modifying your air bag-equipped vehicle

If you modify your vehicle by changing your vehicle's frame, bumper system, front end or side sheet metal or ride height, this may affect the operation of your vehicle's air bag system.

Air bag warning label



Air bag warning labels are attached to alert the passengers of the potential risk of the air bag system.
Note that these government warnings focus on the risk of children. We also want you to be aware of the risks which adults are exposed to that have been described in "Additional safety precautions" on page 3-67.

ACTIVE HOOD SYSTEM (IF EQUIPPED)

The active hood system can reduce a risk of injury to pedestrians by raising the hood in certain accident situations. The active hood system has the additional deformation space under the hood, which is made available for the subsequent head impact.
When the active hood system is activated ;

- The Engine start/stop button is in the ON position and the vehicle speed is between about 25 km/h (15.5 MPH) and 50 km/h (31 MPH).
- The active hood system is designed to work in a frontal collision depending on the intensity, speed or angles of impact of the front collision.

✻ NOTICE

■ Active hood system repair

(Continued)

(Continued)

- If the active hood system has been activated, do not place the hood back by yourself. have the system checked by a professional workshop. Kia recommends to visit an authorized Kia dealer/service partner.
- If you change or repair the front bumper, have the system checked by a professional workshop. Kia recommends to visit an authorized Kia dealer/service partner.

Active hood system activation situation

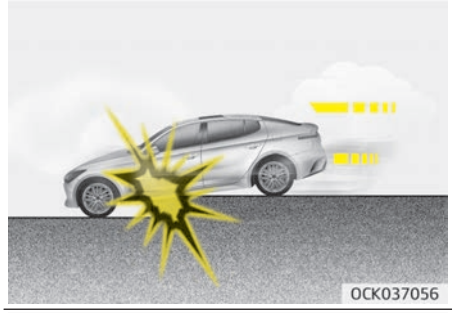

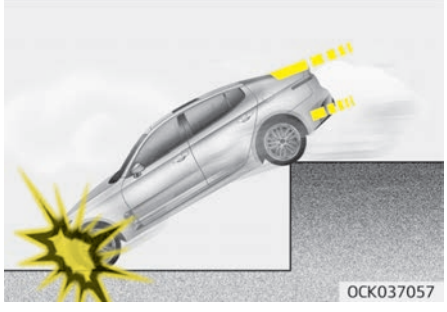

- If the vehicle falls in the gutter or from a high place.

- The active hood system may be activated when an impact is detected by frontal collision without pedestrians. If an animal, trash can or other things are struck by your vehicle.
- In certain high-speed frontal or angled collisions, with car or barrier, the active hood system may work.

Active hood system non-activation situation

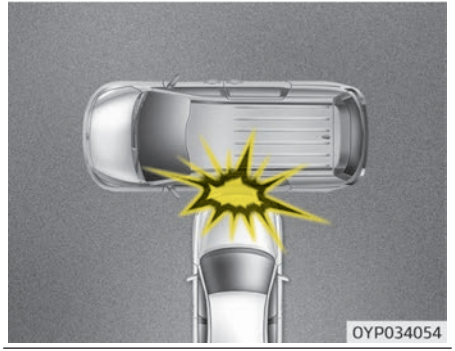

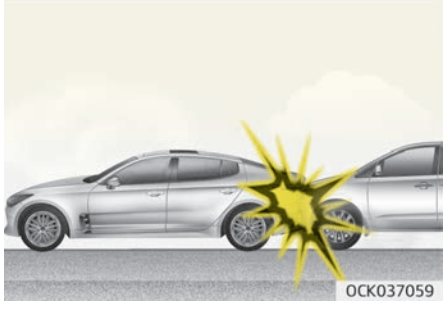





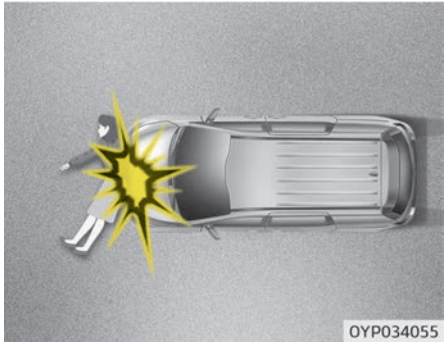

- The active hood system is not designed to operate in side, rear collisions and rollover accidents. Because the vehicle can detect only frontal collision.
- If the front bumper is damaged or modified.
- If the vehicle have an angled frontal collision with pedestrians.
- If a pedestrian, lies on the road.
- If the pedestrian have an object to absorb the shock such as a suit case, buggy or cart.

Active hood system malfunction

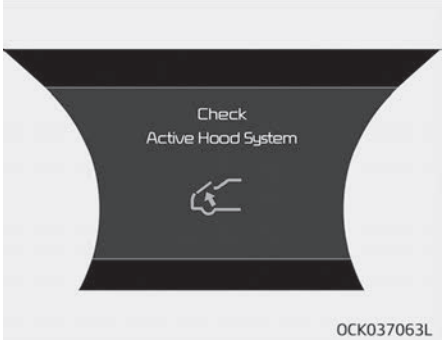

If there is a problem with the system a message will appear in the cluster LCD display.
This warning message means that the protection of pedestrians by the active hood system does not works correctly.
If the warning message displayed, have the system checked by a professional workshop. Kia recommends to visit an authorized Kia dealer/service partner.

✻ NOTICE

- Do not remove or change the components and the wiring of the active hood system.
- Do not change the front bumper or the body structure.
- Do not install or assemble any aftermarket accessory on the front bumper or cover.
- When replacing tires, make sure they are the same size as your original tires. If you drive with different tire or wheel sizes, the active hood system may not work normally.

The above situations may cause a malfunction of the active hood system.

Features of your vehicle

Smart key....4-04
Record your key number....4-04
Key operations....4-04
Immobilizer system....4-04
Smart key function....4-06
Smart key system operation....4-07
Transmitter precautions....4-08
Battery replacement....4-09
Theft-alarm system....4-11
Armed stage....4-11
Theft-alarm stage....4-11
Disarmed stage....4-12
Door locks....4-13
Operating door locks from outside the vehicle....4-13
Operating door locks from inside the vehicle....4-14
Door lock/unlock features....4-15
Child-protection rear door lock....4-16
Tailgate....4-17
Non-power tailgate....4-17
Power tailgate....4-18
Smart tailgate....4-23
Emergency tailgate safety release....4-26
Windows....4-28
Power windows....4-28
Hood....4-33
Opening the hood....4-33
Hood open warning....4-33
Closing the hood....4-33
Fuel filler lid....4-35
Opening the fuel filler lid....4-35
Closing the fuel filler lid....4-36
Emergency fuel filler lid release....4-38
Wide sunroof....4-39
Sunroof open warning....4-40
Sunshade....4-40
Sliding the sunroof....4-41
Tilting the sunroof....4-41
Closing the sunroof....4-42
Resetting the sunroof....4-43
Steering wheel....4-44
Electronic power steering....4-44
Tilt & telescopic steering....4-45
Heated steering wheel....4-46
Horn....4-46
Mirrors....4-48
Inside rearview mirror....4-48
Outside rearview mirror....4-49
Reverse parking aid function....4-51
Instrument cluster....4-52
Instrument cluster control....4-53
Gauges....4-55
Transaxle shift indicator....4-58
LCD display....4-60
LCD modes....4-60
Sport mode....4-61
Trip computer mode....4-61
Distance to empty....4-63
User settings mode....4-64
Trip modes (trip computer)....4-67
Warning messages....4-71

Warning and indicator lights 4-75
Warning lights 4-75
Indicator lights 4-82
Head Up Display (HUD) (if equipped) 4-86
Description 4-86
Head Up Display ON/OFF 4-87
Head Up Display Information 4-87
Head Up Display Setting 4-87
Parking distance warning - reverse 4-88
Operation of the parking distance warning-reverse 4-88
Non-operational conditions of parking distance warning-reverse 4-89
Self-diagnosis 4-90
Parking distance warning - forward (if equipped) 4-91
Operation of the parking distance warning-forward 4-91
Non-operational conditions of parking distance warning-forward 4-94
Self-diagnosis 4-95
Rearview monitor 4-97
Surround view monitoring system 4-98
Rear view monitor 4-98
Lighting 4-101
Battery saver function 4-101
Headlight escort function 4-101
Daytime running lights 4-101
Lighting control 4-101
High beam operation 4-103
High beam assist 4-104
Turn signals and lane change signals 4-106
Rear fog light 4-106
Headlight leveling device 4-107
Dynamic Bending Light (DBL) 4-108
Wipers and washers 4-109
Windshield wipers 4-109
Windshield washers 4-111
Interior light 4-112
Automatic turn off function 4-112
Map lamp 4-112
Room lamp 4-113
Tailgate room lamp 4-113
Glove box lamp 4-114
Vanity mirror lamp 4-114
Door courtesy lamp 4-114
Welcome system 4-115
Welcome light 4-115
Escort welcome 4-115
Interior light 4-115
Defroster 4-116
Rear window defroster 4-116
Climate control system 4-117
System operation 4-117
Air conditioning 4-117
Climate control air filter 4-119
Air conditioning refrigerant label 4-120
Checking the amount of air conditioner refrigerant and compressor lubricant 4-120
Automatic climate control system 4-122
Automatic heating and air conditioning 4-123
Windshield defrosting and defogging 4-131
Automatic climate control system 4-131

Operation tips....4-131
Defogging logic....4-132
Auto defogging system....4-132
Automatic ventilation....4-133
Smart ventilation....4-134
Remote start....4-134
Storage compartment....4-135
Center console storage....4-135
Glove box....4-135
Sunglass holder....4-136
Interior features....4-137
Cigarette lighter....4-137
Ashtray....4-137
Cup holder....4-138
Sunvisor....4-139
Seat warmer....4-140
Air ventilation seat....4-141
Power outlet....4-142
USB charger....4-143
Wireless smart phone charging system....4-143
Coat hook....4-146
Floor mat anchor(s)....4-146
Luggage net (holder)....4-147
Audio system....4-148
Antenna....4-148
AUX, USB port....4-148
How vehicle radio works....4-149

SMART KEY

Record your key number



The key code number is stamped on the key code tag attached to the key set.

Should you lose your keys, Kia recommends to contact an authorized Kia dealer/service partner. Remove the key code tag and store it in a safe place. Also, record the key code number and keep it in a safe place (not in the vehicle).

Key operations



- Used to start the engine.
- Used to lock and unlock the doors.
- Used to lock and unlock the glove box.

To remove the mechanical key, press and hold the release button (1) and remove the mechanical key (2).
To reinstall the mechanical key, put the key into the hole and push it until a click sound is heard.

⚠ WARNING

■ Smart key

Leaving children unattended in a vehicle with the Smart key is dangerous even if the start button is not in the ACC or ON position. Children copy adults and they could press the start button. The smart key would enable children to operate power windows or other controls, or even make the vehicle move, which could result in serious bodily injury or even death. Never leave the keys in your vehicle with unsupervised children, when the engine is running.

Immobilizer system

Your vehicle may be equipped with an electronic engine immobilizer system to reduce the risk of unauthorized vehicle use.
Your immobilizer system is comprised of a small transponder in the smart key and electronic devices inside the vehicle.
With the immobilizer system, whenever the engine start/stop button is changed to the ON position, it checks and determines and verifies if the smart key is valid or not.
If the key is determined to be valid, the engine will start.
If the key is determined to be invalid, the engine will not start.

To activate the immobilizer system:

Change the engine start/stop button to the OFF position. The immobilizer system activates automatically. Without a valid smart key for your vehicle, the engine will not start.

To deactivate the immobilizer system:

Change the engine start/stop button to the ON position.

⚠ WARNING

In order to prevent theft of your vehicle, do not leave spare keys anywhere in your vehicle. Your immobilizer password is a customer unique password and should be kept confidential. Do not leave this number anywhere in your vehicle.

✻ NOTICE

When starting the engine, do not use the key with other immobilizer keys around. Otherwise the engine may not start or may stop soon after it starts. Keep each key separately in order to avoid a starting malfunction.

⚠ CAUTION

Do not put metal accessories near the smart key. Metal accessories may interrupt the transponder signal and may prevent the engine from being started.

✻ NOTICE

If you need additional keys or lose your keys, Kia recommends to visit an authorized Kia dealer/service partner.

⚠ CAUTION

The transponder in your smart key is an important part of the immobilizer system. It is designed to give years of trouble-free service, however you should avoid exposure to moisture, static electricity and rough handling. Immobilizer system malfunction could occur.

⚠ CAUTION

Do not change, alter or adjust the immobilizer system because it could cause the immobilizer system to malfunction. In this case, have the system serviced by a professional workshop. Kia recommends to visit
(Continued)

(Continued)

an authorized Kia dealer/service partner.
Malfunctions caused by improper alterations, adjustments or modifications to the immobilizer system are not covered by your vehicle manufacturer warranty.

Smart key function

■ Type A



■ Type B

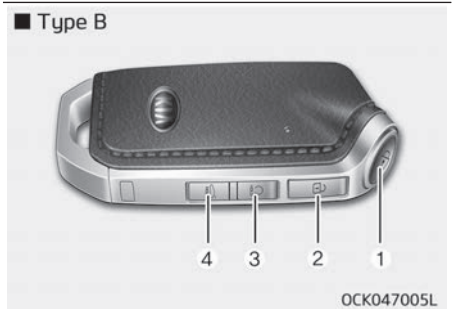

Lock (1)

All doors (and tailgate) are locked if the lock button is pressed.

If all doors (and tailgate) are closed, the hazard warning lights will blink once to indicate that all doors (tailgate) are locked.

Unlock (2)

All doors (and tailgate) are unlocked if the unlock button is pressed.
The hazard warning lights will blink twice to indicate that all doors (and tailgate) are unlocked.
However, after pressing this button, the doors (and tailgate) will lock automatically unless you open any door within 30 seconds.

Remote start (3, if equipped, For Middle East)

You can start the engine and turn on the climate system by pressing the remote start button (3) outside the vehicle.
To start and stop engine remotely :

1. Press the door lock button (1), and then the hazard warning lights blink once to alert you.
2. Press the remote start button (3) for more than 2 seconds to start engine within 4 seconds after pressing the door lock button (1).
3. While remote starting, the hazard warning lights blink. If you want to stop the engine, press the remote start button (3) again.

The climate system will be continuously maintained, as selected when the engine is restarted. If the climate system turned off before you stopped the engine, the climate system does not operate when you start the engine remotely.
If someone without a designated smart key rides your vehicle while remote starting, the engine is automatically stopped for security.

✻ NOTICE

After remotely starting the engine, the engine will turn off automatically after 10 minutes if you do not ride your vehicle.

⚠ CAUTION

- **The remote start will not work if you exceed the operating distance limit (about 10 m).**
- **Avoid idling the engine for prolonged periods to obey the emission regulations in your country.**
- **Laws in your country may restrict the use of remote start.**
  You should check country regulations before using this remote starting system.
- **It is only possible to start the engine remotely when the shift lever is in P (Parking) position.**
- **If the hood or the tailgate is opened, you can't start the engine remotely.**

Tailgate unlock (4)

The tailgate is unlocked if the button is pressed for more than 1 second.
The hazard warning lights will blink twice to indicate that the tailgate is unlocked.
However, after pressing this button, the tailgate will lock automatically unless you open the tailgate within 30 seconds.
Also, once the tailgate is opened and then closed, the tailgate will lock automatically.

Smart key system operation



With a smart key, you can lock or unlock a door (and tailgate) and even start the engine without inserting the key.
Carrying the smart key, you may lock and unlock the vehicle doors (and tailgate). Also, you may start the engine. Refer to the following, for more details.

Locking



Pressing the button of the front outside door handles with all doors (and tailgate) closed and any door unlocked, locks all the doors (and tailgate). The hazard warning lights will blink once to indicate that all doors (and tailgate) are locked. The button will only operate when the smart key is within 0.7 ~ 1m (28 ~ 40 in) from the outside door handle. If you want to make sure that a door has locked or not, you should check the door lock button inside the vehicle or pull the outside door handle.
Even though you press the button, the doors will not lock and the chime sounds if any of the following occurs:
• The smart key is in the vehicle.

- The ENGINE START/STOP button is in the ACC or ON position.
- Any door except the tailgate is opened.

Unlocking

Pressing the button of the front outside door handles with all doors (and tailgate) closed and locked, unlocks all the doors (and tailgate). The hazard warning lights will blink twice to indicate that all doors (and tailgate) are unlocked. The button will only operate when the smart key is within 0.7 ~ 1m (28 ~ 40 in) from the outside door handle.
When the smart key is recognized in the area of 0.7 ~ 1m (28 ~ 40 in) from the front outside door handle, other people can also open a door without possession of the smart key.

Tailgate unlocking

If you are within 0.7 ~ 1m (28 ~ 40 in) from the outside tailgate handle, with your smart key in possession, the tailgate will unlock and open when you press the tailgate handle switch.
The hazard warning lights will blink twice to indicate that the tailgate is unlocked.

Also, once the tailgate is opened and then closed, the tailgate will lock automatically.

Engine start

You can start the engine without inserting the key. For detailed information refer to "Starting the engine with a smart key" on page 5-09.

Restrictions in handling keys



When leaving keys with parking lot and valet attendants, the following procedures will ensure that your vehicle's glove box compartment can not be opened in your absence.

1. Press and hold the release button (1) and remove the mechanical key (2).
2. Close and then lock the glove box using the mechanical key.
3. Leave the smart key with the attendant. The glove box can not be opened without the mechanical key.

Transmitter precautions

The smart key will not work if any of the following occur:

- Another vehicle's smart key is being operated close to your vehicle.
- You exceed the operating distance limit (about 10 m [30 feet]).
- The battery in the transmitter is weak.
- Other vehicles or objects may be blocking the signal.
- The weather is extremely cold.
- The smart key is close to a radio transmitter such as a radio station or an airport which can interfere with normal operation of the transmitter.

- If the smart key is in close proximity to your cell phone or smart phone, the signal from the smart key could be blocked by normal operation of your cell phone or smart phone. This is especially important when the phone is active such as making call, receiving calls, text messaging, and/or sending/ receiving emails.
  Avoid placing the smart key and your cell phone or smart phone in the same pants or jacket pocket and maintain adequate distance between the two devices.

When the smart key does not work correctly, open and close the door with the mechanical key. If you have a problem with the smart key, Kia recommends to contact an authorized Kia dealer/service partner.

⚠ CAUTION

Keep the smart key away from water or any liquid. If smart key is inoperative due to exposure to water or other liquids, it will not be covered
(Continued)

(Continued)

by your manufacturer's vehicle warranty.

⚠ CAUTION

Changes or modifications not expressly approved by the party responsible for compliance could void the user's authority to operate the equipment. If the keyless entry system is inoperative due to changes or modifications not expressly approved by the party responsible for compliance, it will not be covered by your manufacturer's vehicle warranty.

Battery replacement



A smart key uses a 3 volt lithium battery which will normally last for several years. When replacement is necessary, use the following procedure.

1. Pry open the rear cover of the smart key.
2. Replace the battery with a new battery (CR2032). When replacing the battery, make sure the battery position.
3. Install the battery in the reverse order of removal.

For smart key replacement, Kia recommends to visit an authorized Kia dealer/service partner.

⚠ CAUTION

- **If you are unsure how to use or replace the battery, Kia recommends to contact an authorized Kia dealer/service partner.**
- **Using the wrong battery can cause the smart key to malfunction. Be sure to use the correct battery.**
- **To avoid damaging the transmitter, don't drop it, get it wet, or expose it to heat or sunlight.**

✻ NOTICE

An inappropriately disposed battery can be harmful to the environment and human health.
Dispose the battery according to your local law(s) or regulation.

THEFT-ALARM SYSTEM (IF EQUIPPED)

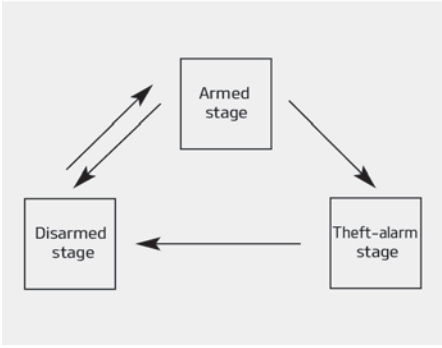

This system is designed to provide protection from unauthorized entry into the vehicle. This system is operated in three stages: the first is the "Armed" stage, the second is the "Theft-alarm" stage, and the third is the "Disarmed" stage. If triggered, the system provides an audible alarm with blinking of the hazard warning lights.

Armed stage

Park the vehicle and stop the engine. Arm the system as described below.

Using the smart key

1. Turn off the engine.
2. Make sure that all doors, the engine hood and tailgate are closed and latched.
3. • Lock the doors by pressing the button of the front outside door handle with the smart key in your possession.
   After completion of the steps above, the hazard warning lights will operate once to indicate that the system is armed.
   If the tailgate or engine hood remains opened, the hazard warning lights will not operate and theft-alarm will not arm. After this, if the tailgate and engine hood are closed, the hazard warning lights will blink once and the theft-alarm will arm.
   • Lock the doors by pressing the lock button on the smart key.
   After completion of the steps above, the hazard warning lights will operate once to indicate that the system is armed.
   If the tailgate or engine hood remains opened, the hazard warning lights will not operate and theft-alarm will not arm. After this, if the tailgate and engine hood are closed, the hazard warning lights will blink once and the theft-alarm will arm.

Do not arm the system until all passengers have left the vehicle. If the system is armed while a passenger(s) remains in the vehicle, the alarm may be activated when the remaining passenger(s) leaves the vehicle. If any door (or tailgate) or engine hood is opened within 30 seconds after the system enters the armed stage, the system will be disarmed to prevent unnecessary alarm.

Theft-alarm stage

The alarm will be activated if any of the following occurs while the system is armed.

- A front or rear door is opened without using the transmitter.
- The tailgate is opened without using the transmitter.
- The engine hood is opened.

The horn will sound and the hazard warning lights will blink continuously for approximately 27 seconds. Then, an alarm will sound two times with 10 seconds interval. If the alarm situation does not change after the alarm has sounded, it will go off again. To turn off the system, unlock the doors with the transmitter.

Disarmed stage

The system will be disarmed when:

Smart key

- The door unlock button is pressed.
- The button of the front outside door is pressed while carrying the smart key.
- The engine is started. (within 3 seconds)

After the doors are unlocked, the hazard warning lights will blink twice to indicate that the system is disarmed.

After pressing the unlock button, if any door (or tailgate) is not opened within 30 seconds, the system will be re-armed.

✻ NOTICE

- If the system is not disarmed with the smart key, open the door with the mechanical key and start the engine. Then the system will be disarmed.
- If you lose your keys, Kia recommends to visit an authorized Kia dealer/service partner.

⚠ CAUTION

Do not change, alter or adjust the theft-alarm system because it could cause the theft-alarm system to malfunction have the system serviced by a professional workshop. Kia recommends to visit an authorized Kia dealer/service partner.
Malfunctions caused by improper alterations, adjustments or modifica-
(Continued)

(Continued)

tions to the theft-alarm system are not covered by your vehicle manufacturer warranty.

DOOR LOCKS

Operating door locks from outside the vehicle

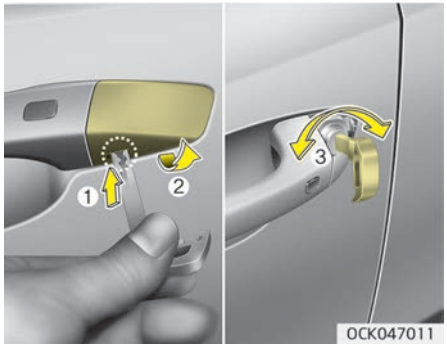

- Turn the key toward the rear of the vehicle to lock and toward the front of the vehicle to unlock.
- If you lock/unlock the driver's door with a key, only the driver's door will lock/unlock.
- Doors can also be locked and unlocked with the transmitter.
- Once the doors are unlocked, they may be opened by pulling the door handle.
- When closing the door, push the door by hand. Make sure the doors are closed securely.
- When the vehicle's battery run out and you leave the vehicle, make sure all the doors are locked. You can lock the driver's door with a key and the rest of the doors with the lock button above the door inside handle.

⚠ CAUTION

Be careful not to damage the cover while removing it or misplace it after removing it.

✻ NOTICE

- In cold and wet climates, door lock and door mechanisms may not work properly due to freezing conditions.

(Continued)

(Continued)

- If the door is locked/unlocked multiple times in rapid succession with either the vehicle key or door lock switch, the system may stop operating temporarily in order to protect the circuit and prevent damage to system components.

⚠ WARNING

- **If you don't close the door securely, the door may open again.**
- **Be careful that someone's body and hands are not trapped when closing the door.**

⚠ WARNING

If people must spend a longer time in the vehicle while it is very hot or cold outside, there is risk of injuries or danger to life. Do not lock the vehicle from the outside when there are people in it.

⚠ CAUTION

Do not frequently repeat opening and closing of doors, or apply excessive force to a door while the door closer is operating.

Operating door locks from inside the vehicle

With the door lock button

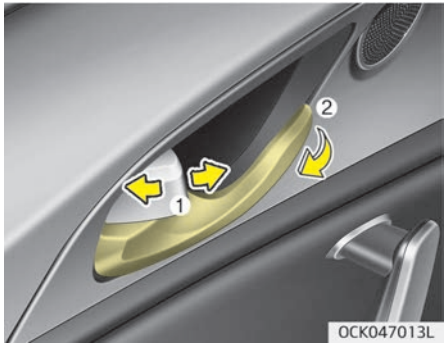

- To unlock a door, push the door lock button (1) to the "Unlock" position. The red mark on the button will be visible.
- To lock a door, push the door lock button (1) to the "Lock" position. If the door is locked properly, the red mark on the door lock button will not be visible.
- To open a door, pull the door handle (2) outward.
- If the inner door handle of the driver's (or front passenger's) door is pulled when the door lock button is in the lock position, the button will unlock and the door will open. (if equipped)
- Doors cannot be locked if the smart key is in the vehicle and an door is open.

⚠ WARNING

■ Door lock malfunction

If a power door lock ever fails to function while you are in the vehicle, try one or more of the following techniques to exit:

- **Operate the door unlock feature repeatedly (both electronic and manual) while simultaneously pulling on the door handle.**

(Continued)

(Continued)

- **Operate the other door locks and handles, front and rear.**
- **Lower a front window and use the key to unlock the door from outside.**
- **Move to the cargo area and open the tailgate.**

⚠ WARNING

Do not pull the inner door handle of driver's (or passenger's) door while the vehicle is moving.

With central door lock switch



Operate by pressing the central door lock switch.

- When pressing the right portion(1) for driver side of the switch, all vehicle doors will lock.
- When pressing the left portion(2) for driver side of the switch, all vehicle doors will unlock.
- If the smart key is in the vehicle and any door is opened, the doors will not lock even though the right portion(1) for driver side of the central door lock switch is pressed.

⚠ WARNING

■ Doors

- **The doors should always be fully closed and locked while the vehicle is in motion to prevent accidental opening of the door. Locked doors will also discourage potential intruders when the vehicle stops or slows down.**
- **Be careful when opening doors and watch for vehicles, motorcycles, bicycles or pedestrians approaching the vehicle in the path of the door. Opening a door when something is approaching can cause damage or injury.**

⚠ WARNING

■ Unlocked vehicles

Leaving your vehicle unlocked can invite theft or possible harm to you or others from someone hiding in your vehicle while you are gone. Always press the Engine Start/Stop Button to the OFF position, engage the parking brake, close all windows and

(Continued)

(Continued)

lock all doors when leaving your vehicle unattended.

⚠ WARNING

■ Unattended children

An enclosed vehicle can become extremely hot, causing death or severe injury to unattended children or animals who cannot escape the vehicle. Furthermore, children might operate features of the vehicle that could injure them, or they could encounter other harm, possibly from someone gaining entry to the vehicle. Never leave children or animals unattended in your vehicle.

Door lock/unlock features

Impact sensing door unlock system

All doors will automatically unlock when an impact causes the air bags to deploy.

Speed sensing door lock system

All doors will automatically lock after the vehicle speed exceeds 15 km/h.

You can activate or deactivate the auto door lock/unlock features in the vehicle. Refer to “User setting” on page 4-64.

Child-protection rear door lock

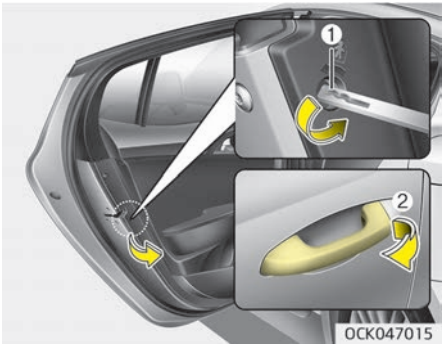

The child safety lock is provided to help prevent children from accidentally opening the rear doors from inside the vehicle. The rear door safety locks should be used whenever children are in the vehicle.
The child safety lock is located on the edge of each rear door. When the child safety lock is in the lock position (1), the rear door will not open if the inner door handle (2) is pulled.

To lock the child safety lock, insert a key (or screwdriver) into the hole and turn it to the lock position.
To allow a rear door to be opened from inside the vehicle, unlock the child safety lock.

⚠ WARNING

■ Rear door locks

If children accidentally open the rear doors while the vehicle is in motion, they could fall out and be severely injured or killed. To prevent children from opening the rear doors from the inside, the rear door safety locks should be used whenever children are in the vehicle.

TAILGATE

⚠ WARNING

■ Exhaust fumes

If you drive with the tailgate opened, you will draw dangerous exhaust fumes into your vehicle which can cause serious injury or death to vehicle occupants.
If you must drive with the tailgate opened, keep the air vents and all windows open so that additional outside air comes into the vehicle.

⚠ WARNING

■ Rear cargo area

Occupants should never ride in the rear cargo area where no restraints are available. To avoid injury in the event of an accident or sudden stops, occupants should always be properly restrained.

Non-power tailgate

Opening the tailgate

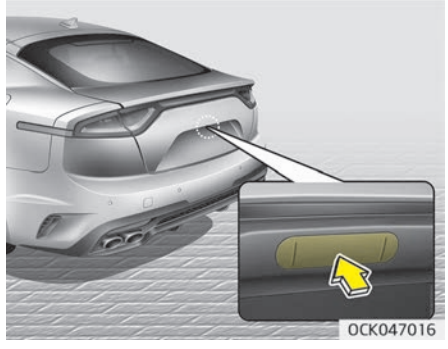

- The tailgate is locked or unlocked when all doors are locked or unlocked with the smart key or central door lock/unlock switch.
- Only the tailgate is unlocked if the tailgate unlock button on the smart key is pressed for approximately 1 second.
- If unlocked, the tailgate can be opened by pressing the handle and pulling it up.
- Once the tailgate is opened and then closed, the tailgate locks automatically. (All doors must be locked.)

✻ NOTICE

In cold and wet climates, door lock and door mechanisms may not work properly due to freezing conditions.

⚠ WARNING

The tailgate swings upward. Make sure no objects or people are near the rear of the vehicle when opening the tailgate.

⚠ CAUTION

Make certain that you close the tailgate before driving your vehicle. Possible damage may occur to the tailgate lift cylinders and attaching hardware if the tailgate is not closed prior to driving.

Closing the tailgate



Lower and push down the tailgate firmly. Make sure that the tailgate is securely latched.

⚠ WARNING

Make sure your hands, feet and other parts of your body are safely out of the way before closing the tailgate.

⚠ CAUTION

Make sure nothing is near the tailgate latch and striker while closing the tailgate. It may damage the tailgate's latch.

Power tailgate (if equipped)

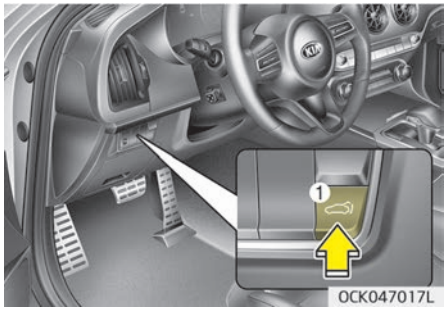

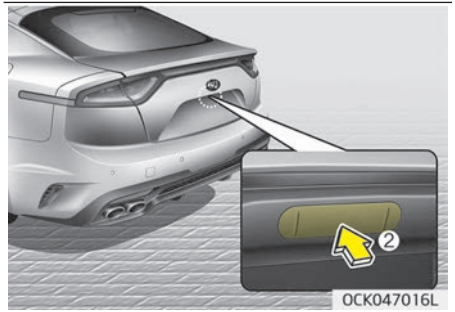

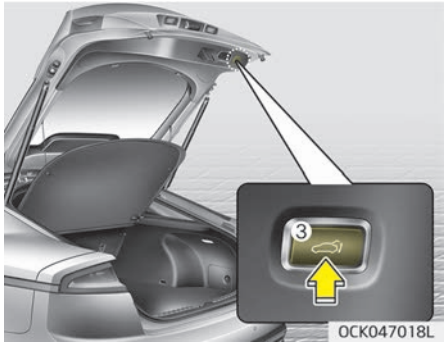

1. Power tailgate open/close button
2. Power tailgate handle switch
3. Power tailgate close button

✻ NOTICE

If the engine start/stop button is ON position, the power tailgate can operate when the automatic transmission is in P (Park).

⚠ WARNING

Never leave children or animals unattended in your vehicle. Children or animals might operate the power tailgate that could result in injury to themselves or others, or damage the vehicle.

✻ NOTICE

Do not put heavy stuffs on the power tailgate when you operate the power tailgate. Additional weight on tailgate could cause damages to the system.

⚠ WARNING

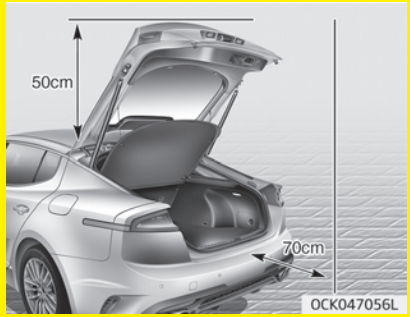

Make sure that there are no people or objects in the path of the power tailgate (or smart tailgate) prior to use. Serious injury, damage to the vehicle or damage to surrounding objects may result if contact with the power tailgate (or smart tailgate) occurs.

⚠ CAUTION

Do not close or open the power tailgate manually. This may cause dam-

(Continued)

(Continued)

age to the power tailgate. If it is necessary to close or open the power tailgate manually when the battery is discharged or disconnected, do not apply excessive force.

Opening the tailgate



The power tailgate will open automatically by doing one of the following:

- Press the tailgate unlock button on the smart key for approximately one second.

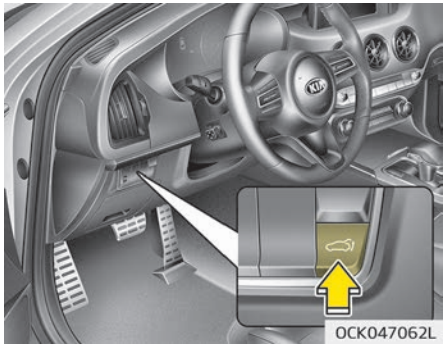

- Press the power tailgate open button for approximately one second.
- For emergency stop while power tailgate operating, press the power tailgate open/close button shortly.

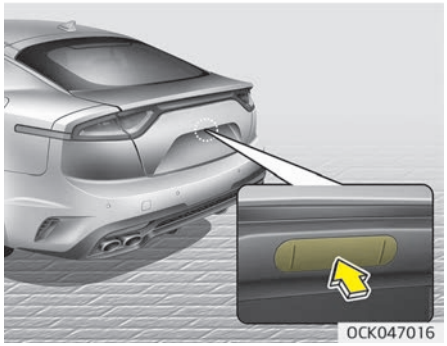

- Press the tailgate handle switch carrying the smart key with you.

Closing the tailgate

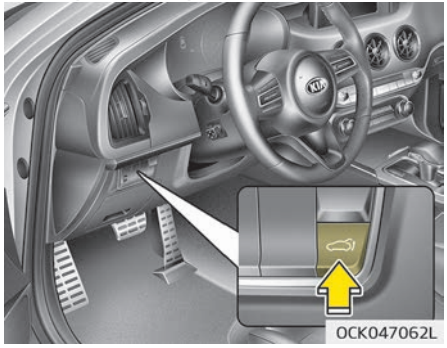

- Press the power tailgate close button for approximately one second when the tailgate is opened.
  The tailgate will close and lock automatically.

- For emergency stop while power tailgate operating, press the power tailgate open/close button shortly.

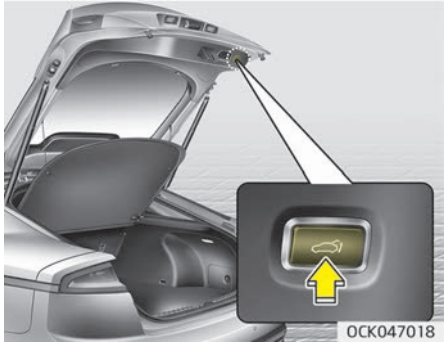

- Press the power tailgate close button for approximately one second when the tailgate is opened.
  The tailgate will close and lock automatically.

Power tailgate non-opening conditions

The power tailgate will not open or close automatically, when the vehicle is moving more than 3 km/h (2 mph).

⚠ WARNING

The chime will sound continuously if you drive over 3 km/h (2 mph) with the tailgate opened. Stop your vehicle immediately at a safe place and check if your tailgate is opened.

⚠ CAUTION

Do not operate the power tailgate more than 5 times continuously.
It may damage the power tailgate system. If you operate the power tailgate more than 5 times continuously, the chime will sound 3 times and the power tailgate will not operate. At this time, stop operating the tailgate and leave it for more than 1 minute.

✻ NOTICE

- The power tailgate can be operated when the engine is not running. However the power tailgate operation consumes large amounts of vehicle electric power. To prevent the battery from being discharged, do not operate it excessively e.g.: more than approximately 10 times repeatedly.
- To prevent the battery from being discharged, do not leave the power tailgate in the open position for a long lime.
- Do not modify or repair any part of the power tailgate by yourself. Kia recommends to visit an authorized Kia dealer/service partner.
- When jacking up the vehicle to change a tire or repair the vehicle, do not operate the power tailgate. This could cause the power tailgate to operate improperly.

(Continued)

(Continued)

- In cold and wet climates, the power tailgate may not work properly due to freezing conditions.

Automatic reversal



During power opening and closing if the power tailgate is blocked by an object or part of the body, the power tailgate will detect the resistance.

- If the resistance is detected while opening the tailgate, it will stop and move in the opposite direction.
- If the resistance is detected while closing the tailgate, it will stop and move in the opposite direction.

However, if the resistance is weak such as from an object that is thin or soft, or the tailgate is near the latched position, the automatic stop and reversal may not detect the resistance.
If the automatic reversal feature operates continuously more than twice during opening or closing operation, the power tailgate may stop at that position. At this time, close the tailgate manually and operate the tailgate automatically again.

⚠ WARNING

- **Never intentionally place any object or part of your body in the path of the power tailgate to make sure the automatic reversal operates.**
- **Never operate power tailgate attached with any heavy objects (ex. Bicycles). It could damage the power tailgate.**

How to reset the power tailgate

If the battery has been discharged or disconnected, or if the related fuse has been replaced or disconnected, for the power tailgate to operate normally, reset the power tailgate as follow:

1. Put the shift lever in P (Park).
2. While Pressing the tailgate close button, press the tailgate handle switch for more than 3 seconds. (the chime will sound)
3. Close the tailgate manually.

If the power tailgate does not work properly after the above procedure, have the system checked by a professional workshop. Kia recommends to visit an authorized Kia dealer/service partner.

✻ NOTICE

If the power tailgate does not operate normally, check again if the gear position is in right position.

Power tailgate opening height user setting

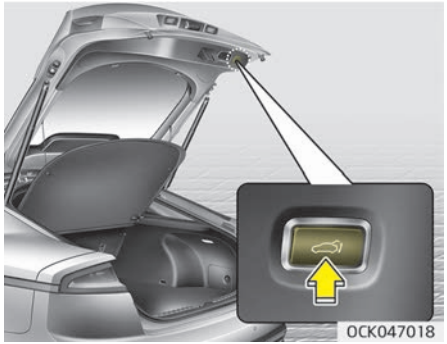

The driver may set the height of a fully opened tailgate by following the below instruction.

1. Position the tailgate manually to the height you prefer.
2. Press the tailgate close button for more than 3 seconds.
3. Close the tailgate manually after hearing the buzzer sound.

The tailgate will open to the height the driver has set up.

Smart tailgate (if equipped)

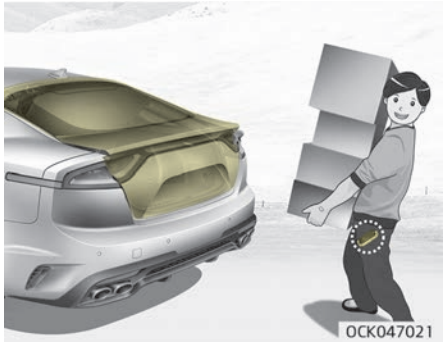

On the vehicle equipped with a smart key, the tailgate can be opened with no-touch activation using the Smart tailgate system.

How to use the Smart Tailgate

The tailgate can be opened with no-touch activation satisfying all the conditions below.

- After 15 seconds when all doors are closed and locked
- Positioned in the detecting area for more than 3 seconds.

✻ NOTICE

- The Smart Tailgate does not operate when:
  - The smart key is detected within 15 seconds after the doors are closed and locked, and is continuously detected.
  - The smart key is detected within 15 seconds after the doors are closed and locked, and 1.5 m from the front door handles. (for vehicles equipped with Welcome Light)
  - A door is not locked or closed.
  - The smart key is in the vehicle.

1. Setting
   To activate the Smart Tailgate, go to User Settings Mode and select Smart Tailgate on the LCD display.

✻ For more details, refer to “LCD display” on page 4-60.

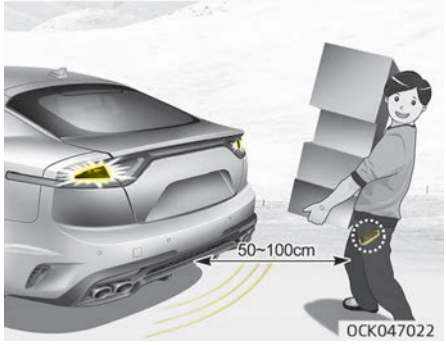

2. Detect and Alert
   If you are positioned in the detecting area (50 ~100 cm behind the vehicle) carrying a smart key, the hazard warning lights will blink and chime will sound for about 3 seconds to alert you the smart key has been detected and the tailgate will open.

✻ NOTICE

Do not approach the detecting area if you do not want the tailgate to open. If you have unintentionally entered the detecting area and the

(Continued)

(Continued)

hazard warning lights and chime starts to operate, leave the detecting area with the smart key. The tailgate will stay closed.

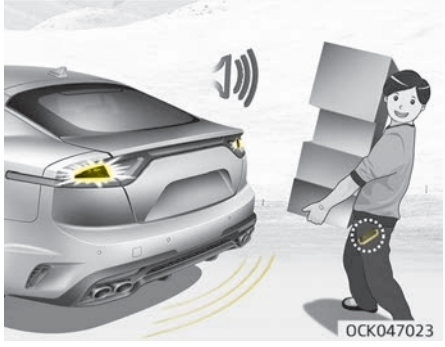

3. Automatic opening
   The hazard warning lights will blink and chime will sound 2 times and then the tailgate will slowly open.

⚠ WARNING

- **Make certain that you close the tailgate before driving your vehicle.**
- **Make sure there are no people or objects around the tailgate before opening or closing the tailgate.**
- **Make sure objects in the rear cargo area do not come out when opening the tailgate on the slope way. It may cause serious injury.**
- **Make sure to deactivate the Smart tailgate function when washing your vehicle.**
  Otherwise, the tailgate may open inadvertently.
- **The key should be kept out of reach of children. Children may inadvertently open the Smart Tailgate while playing around the rear area of the vehicle.**

How to deactivate the Smart Tailgate function using the smart key



1. Door lock
2. Door unlock
3. Tailgate open

If you press any button of the smart key during the Detect and Alert stage, the Smart Tailgate function will be deactivated.
Make sure to be aware of how to deactivate the Smart Tailgate function for emergency situations.

✻ NOTICE

- If you press the door unlock button (2), the Smart Tailgate function will be deactivated temporarily. But, if you do not open any door for 30 seconds, the Smart Tailgate function will be activated again.
- If you press the tailgate open button (3) for more than 1 second, the tailgate opens.
- If you press the door lock button (1) or tailgate open button (3) when the Smart Tailgate function is not in the Detect and Alert stage, the Smart Tailgate function will not be deactivated.
- In case you have deactivated the Smart Tailgate function by pressing the smart key button and opened a door, the Smart Tailgate function can be activated again by closing and locking all doors.

Detecting area

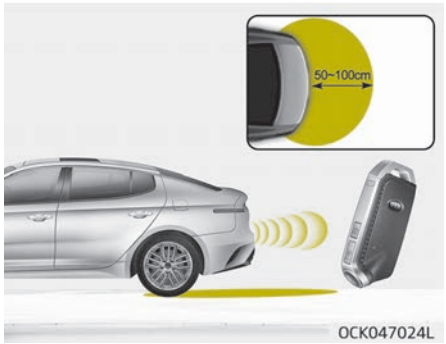

- The Smart Tailgate operates with a welcome alert if the smart key is detected within 50~100 cm from the tailgate.
- The alert stops at once if the smart key is positioned outside the detecting area during the Detect and Alert stage.

✻ NOTICE

- The Smart Tailgate function will not work if any of the following occurs:
  - The smart key is close to a radio transmitter such as a radio station or an airport which can interfere with normal operation of the transmitter.
  - The smart key is near a mobile two way radio system or a cellular phone.
  - Another vehicle's smart key is being operated close to your vehicle.
- The detecting range may decrease or increase when :
  - One side of the tire is raised to replace a tire or to inspect the vehicle.
  - The vehicle is slantingly parked on a slope or unpaved road, etc.

Emergency tailgate safety release

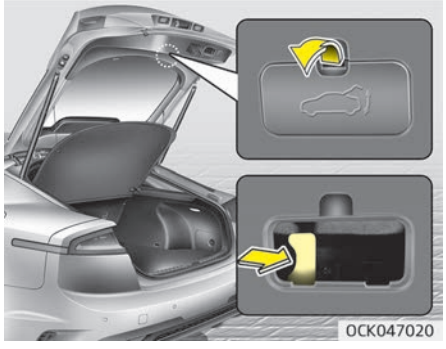

Your vehicle is equipped with the emergency tailgate safety release lever located on the bottom of the tailgate. When someone is inadvertently locked in the luggage compartment. The tailgate can be opened by doing as follows:

1. Remove the cover.
2. Push the release lever to the right.
3. Push up the tailgate.

⚠ WARNING

- **For emergencies, be fully aware of the location of the emergency tailgate safety release lever in the vehicle and how to open the tailgate if you are accidentally locked in the luggage compartment.**
- **No one should be allowed to occupy the luggage compartment of the vehicle at any time. The luggage compartment is a very dangerous location in the event of a crash.**
- **Use the release lever for emergencies only. Use with extreme caution, especially while the vehicle is in motion.**

⚠ WARNING



Do not grasp the part supporting the tailgate (gas lifter), as this may cause serious injury.

WINDOWS

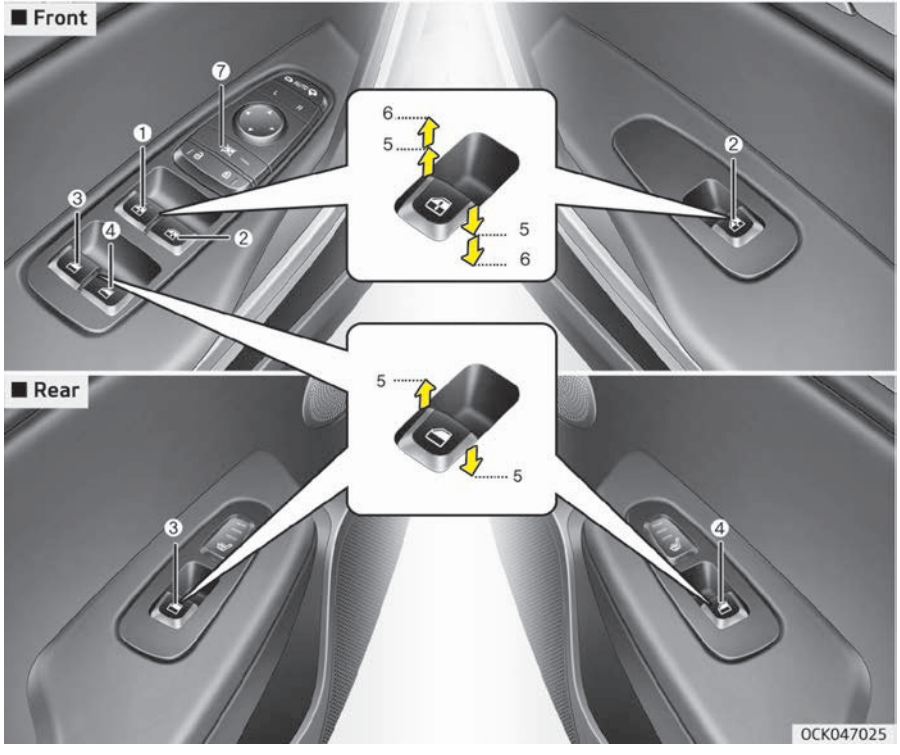

1. Driver's door power window switch
2. Front passenger's door power window switch
3. Rear door (left) power window switch
4. Rear door (right) power window switch
5. Window opening and closing*
6. Automatic power window up*/ down*
7. Power window lock button

✻ NOTICE

In cold and wet climates, power windows may not work properly due to freezing conditions.

Power windows

The Engine Start/Stop Button must be in the ON position for power windows to operate.

*: if equipped

Each door has a power window switch that controls the door's window. The driver has a power window lock button which can block the operation of rear passenger windows. The power windows can be operated for approximately 30 seconds after the engine start/stop button turned to the ACC or LOCK position. However, if the front doors are opened, the power windows cannot be operated even within the 30 second period.
The driver's door has a master power window switch that controls all the windows in the vehicle.
If the window cannot be close because it is blocked by objects, remove the objects and close the window.

✻ NOTICE

While driving with the rear windows down or with the sunroof (if equipped) in an open (or partially open position), your vehicle may demonstrate a wind buffeting or pulsation noise. This noise is a normal occurrence and can be reduced or eliminated by taking the following actions.
(Continued)

(Continued)

If the noise occurs with one or both of the rear windows down, partially lower both front windows approximately 3 cm (1 inch). If you experience the noise with the sunroof open, slightly reduce the size of the sunroof opening.

⚠ WARNING

Do not install any accessories in the area of windows. It may impact jam protection.

Window opening and closing



Type A

To open or close a window, press down or pull up the front portion of the corresponding switch to the first detent position (5).

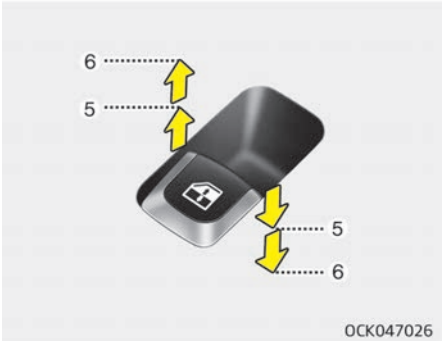

Type B - Auto up/down window (if equipped)

Pressing or pulling up the power window switch momentarily to the second detent position (6) completely lowers or raises the window even when the switch is released. To stop the window at the desired position while the window is in operation, pull up or press down and release the switch.
If the power window does not operate normally, the automatic power window system must be reset as follows:

1. Place the Engine Start/Stop Button to the ON position.
2. Close the window and continue pulling up the power window switch for at least 1 second after the window is completely closed.

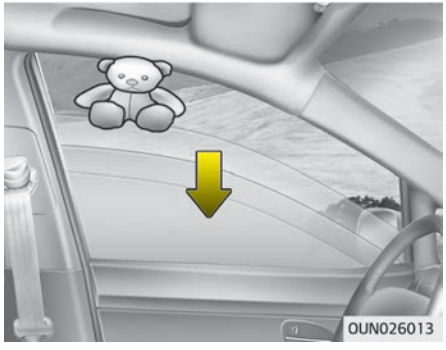

Automatic reversal (For Type B)

If the upward movement of the window is blocked by an object or part of the body, the window will detect the resistance and will stop upward movement. The window will then lower approximately 30 cm (11.8 in.) to allow the object to be cleared.
If the window detects the resistance while the power window switch is pulled up continuously, the window will stop upward movement then lower approximately 2.5 cm (1 in.).
And if the power window switch is pulled up continuously again within 5 seconds after the window is lowered by the automatic window reversal feature, the automatic window reversal will not operate.

✻ NOTICE

The automatic reverse feature for the window is only active when the "auto up" feature is used by fully pulling up the switch. The automatic reverse feature will not operate if the window is raised using the halfway position on the power window switch.

⚠ WARNING

Always check for obstructions before raising any window to avoid injuries or vehicle damage. If an object less than 4 mm
■ (0.16 in.)
in diameter is caught between the window glass and the upper window
(Continued)

(Continued)

channel, the automatic reverse window may not detect the resistance and will not stop and reverse direction.

⚠ WARNING

The automatic reverse feature doesn't active while resetting power window system.
Make sure body parts or other objects are safely out of the way before closing the windows to avoid injuries or vehicle damage.

Power window lock button



The driver can disable the power window switches on the rear passengers' doors by pressing the power window lock button to the lock position (pressed).
When the power window lock button is pressed :

- The driver's master control can operate all passenger's power windows.
- The front passenger's control can operate the front passenger's power window.
- The rear passengers' control cannot operate the rear passenger's power window.

⚠ CAUTION

- **To prevent possible damage to the power window system, do not open or close two windows or more at the same time. This will also ensure the longevity of the fuse.**
- **Never try to operate the main switch on the driver's door and the individual door window switch in opposite directions at the same time. If this is done, the window will stop and cannot be opened or closed.**

⚠ WARNING

■ Windows

- **NEVER leave the keys in your vehicle with unsupervised children, when the engine is running.**

(Continued)

(Continued)

- **NEVER leave any child and animal unattended in the vehicle. Even very young children may inadvertently cause the vehicle to move, entangle themselves in the windows, or otherwise injure themselves or others.**
- **Always double check to make sure all arms, hands, head and other obstructions are safely out of the way before closing a window.**
- **Do not allow children play with the power windows. Keep the driver's door power window lock button in the LOCK position (pressed). Serious injury can result from unintentional window operation by the child.**
- **Do not extend heads or any limbs outside the window while the vehicle is in motion.**

HOOD

Opening the hood

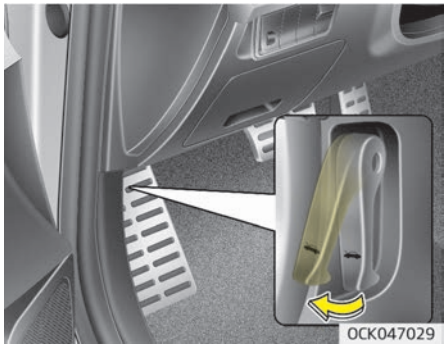

1. Pull the release lever to unlatch the hood. The hood should pop open slightly.

⚠ WARNING

Open the hood after turning off the engine on a flat surface, shifting the shift lever to the P(Park) position for automatic transaxle.

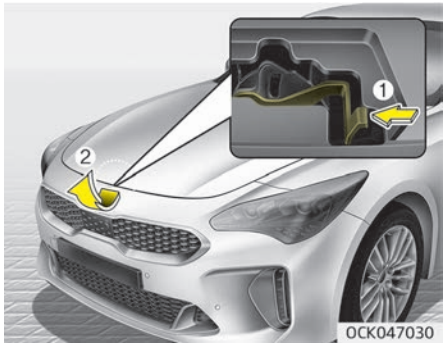

2. Go to the front of the vehicle, raise the hood slightly, push the secondary latch (1) left side and lift the hood (2).
3. Raise the hood. It will completely rise by itself after it has been raised about halfway.

Hood open warning



The hood warning message will appear on the LCD display when hood is open. The warning chime will operate when the vehicle is being driven at or above 3 km/h (2 mph) with the hood open.

Closing the hood

1. Before closing the hood, check the following:
   - All filler caps in engine compartment must be correctly installed.
   - Gloves, rags or any other combustible material must be removed from the engine compartment.

2. Lower the hood until it is about 30 cm above the closed position and let it drop. Make sure that it locks into place.
3. Check that the hood has engaged properly. If the hood can be raise slightly, it is not properly engaged. Open it again and close it with a little more force.

⚠ WARNING

- **Before closing the hood, ensure that all obstructions are removed from the hood opening. Closing the hood with an obstruction present in the hood opening may result in property damage or severe personal injury.**
- **Do not leave gloves, rags or any other combustible material in the engine compartment. Doing so may cause a heat-induced fire.**

⚠ WARNING

- **Always double check to be sure that the hood is firmly latched before driving away. If it is not latched, the hood could open while the vehicle is being driven, causing a total loss of visibility, which might result in an accident.**
- **Do not move the vehicle with the hood raised. The view will be blocked and the hood could fall or be damaged.**

FUEL FILLER LID

Opening the fuel filler lid

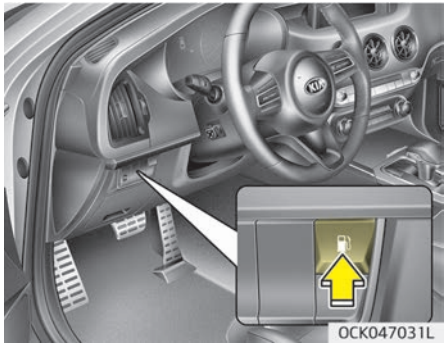

The fuel filler lid must be opened from inside the vehicle by pushing the fuel filler lid button.

✻ NOTICE

If the fuel filler lid does not open because ice has formed around it, tap lightly or push on the lid to break the ice and release the lid. Do not pry on the lid. If necessary, spray around the lid with an approved de-icer fluid (do not use radiator anti-freeze) or move the vehicle to a warm place and allow the ice to melt.

■ Type A

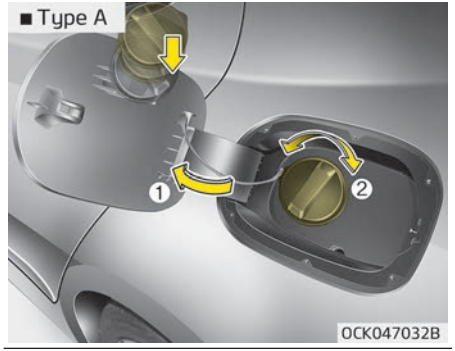

■ Type B

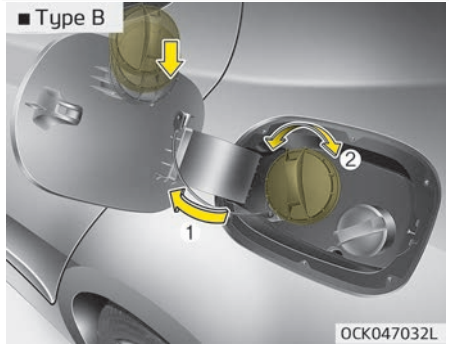

1. Stop the engine.
2. To open the fuel filler lid, push the fuel filler lid opener button.
3. Pull open the fuel filler lid (1).
4. To remove the cap, turn the fuel filler cap (2) counterclockwise (3).
5. Refuel as needed.

Closing the fuel filler lid

1. To install the cap, turn it clockwise until it “clicks”. This indicates that the cap is securely tightened.
2. Close the fuel filler lid and push it lightly and make sure that it is securely closed.

⚠ WARNING

■ Refueling

(Continued)

(Continued)

- **If pressurized fuel sprays out, it can cover your clothes or skin and subject you to the risk of fire and burns. Always remove the fuel cap carefully and slowly. If the cap is venting fuel or if you hear a hissing sound, wait until the condition stops before completely removing the cap.**
- **Do not "top off" after the nozzle automatically shuts off when refueling.**
- **Always check that the fuel cap is installed securely to prevent fuel spillage in the event of an accident.**

⚠ WARNING

■ Refueling dangers

Automotive fuels are flammable materials. When refueling, please note the following guidelines carefully. Failure to follow these guidelines may result in severe personal injury,

(Continued)

(Continued)

severe burns or death by fire or explosion.

- **Read and follow all warning posted at the gas station facility.**
- **Before refueling note the location of the Emergency Gasoline Shut-Off, if available, at the gas station facility.**
- **Before touching the fuel nozzle, you should eliminate potentially dangerous static electricity discharge by touching another metal part of the vehicle, a safe distance away from the fuel filler neck, nozzle, or other gas source.**

(Continued)

(Continued)

- Do not get back into a vehicle once you have begun refueling since you can generate static electricity by touching, rubbing or sliding against any item or fabric (polyester, satin, nylon, etc.) capable of producing static electricity. Static electricity discharge can ignite fuel vapors resulting in rapid burning. If you must reenter the vehicle, you should once again eliminate potentially dangerous static electricity discharge by touching a metal part of the vehicle, away from the fuel filler neck, nozzle or other gasoline source.
- When using an approved portable fuel container, be sure to place the container on the ground prior to refueling. Static electricity discharge from the container can ignite fuel vapors causing a fire.
  Once refueling has begun, contact with the vehicle should be maintained until the filling is complete.
  Use only approved portable plastic fuel containers designed to carry and store gasoline.

(Continued)

(Continued)

- Do not use cellular phones while refueling. Electric current and/or electronic interference from cellular phones can potentially ignite fuel vapors causing a fire.
- When refueling, always shut the engine off. Sparks produced by electrical components related to the engine can ignite fuel vapors causing a fire. Once refueling is complete, check to make sure the filler cap and filler door are securely closed, before starting the engine.
- DO NOT use matches or a lighter and DO NOT SMOKE or leave a lit cigarette in your vehicle while at a gas station especially during refueling. Automotive fuel is highly flammable and can, when ignited, result in fire.
- If a fire breaks out during refueling, leave the vicinity of the vehicle, and immediately contact the manager of the gas station and then contact the local fire department. Follow any safety instructions they provide.

⚠ CAUTION

- Make sure to refuel your vehicle according to "Fuel requirements" on page 1-03.
- If the fuel filler cap requires replacement, please make sure that you use parts designed for replacement in your vehicle.
  An incorrect fuel filler cap can result in a serious malfunction of the fuel system or emission control system. For more detailed information, Kia recommends to contact an authorized Kia dealer/service partner.
- Do not spill fuel on the exterior surfaces of the vehicle. Any type of fuel spilled on painted surfaces may damage the paint.
- After refueling, make sure the fuel cap is installed securely to prevent fuel spillage in the event of an accident.

Emergency fuel filler lid release

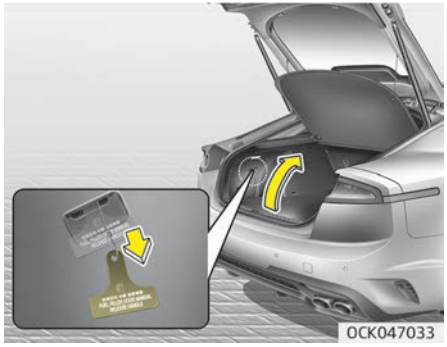

If the fuel filler lid does not open using the remote fuel filler lid release, you can open it manually. Remove the panel in the cargo area. Pull the handle out slightly.

⚠ CAUTION

Do not pull the handle excessively, otherwise the luggage compartment area trim or release handle may be damaged.

WIDE SUNROOF (IF EQUIPPED)



If your vehicle is equipped with a sunroof, you can slide or tilt your sunroof with the sunroof control lever located on the overhead console.
The sunroof can be operated for approximately 30 seconds after the engine start/stop button is turned to the ACC or LOCK position. However, if the front doors are opened, the sunroof cannot be opened even within the 30 seconds period.

- In cold and wet climates, the sunroof may not work properly due to freezing conditions.
- After the vehicle is washed or in a rainstorm, be sure to wipe off any water that is on the sunroof before operating it.

⚠ CAUTION

■ Sunroof control lever

Do not continue to move the sunroof control lever after the sunroof is fully opened, closed, or tilted. Damage to the motor or system components could occur.

⚠ CAUTION

Make sure the sunroof is fully closed when leaving your vehicle. If the sunroof is opened, rain or snow may leak through the sunroof and wet the interior as well as cause theft.

⚠ WARNING

■ Sunroof break

The sunroof, which is made of glass, may break if the sufficient impact is applied. In this case, in an accident, any improperly-belted occupant may be tossed out of the vehicle through the sunroof, possibly result-
(Continued)

(Continued)

ing injury. To minimize all the possible accident risk, all occupants must be properly belted and, in case of a child, be fastened in a proper child restraint.

⚠ WARNING

- **In order to prevent accidental operation of the sunroof, especially by a child, do not let a child operate the sunroof.**
- **Do not sit on the top of the vehicle. It may cause vehicle damage.**

Sunroof open warning



If the driver turns off the engine when the sunroof is not fully closed, the warning chime will sound for approximately 4 seconds and a message will appear on the LCD display.
Close the sunroof securely when leaving your vehicle.

⚠ WARNING

- **Never adjust the sunroof or sunshade while driving. This could result in loss of control and an accident that may cause death, serious injury, or property damage.**
- **If you would like to carry items on the roof using a cross bar, do not operate the sunroof.**
- **When carrying cargo on the roof, do not load heavy items above the sunroof or glass roof.**
- **Do not allow children to operate the sunroof.**

⚠ CAUTION

Do not extend any luggage out side the sunroof while driving.

Sunshade



To open the sunshade

Pull the sunroof control lever backward to the 1st detent position.

To close the sunshade when the sunroof glass is closed

Push the sunroof control lever forward or pull it down to the 1st detent position.
To stop the sliding at any point, press the sunshade control switch momentarily.

✻ NOTICE

Wrinkles formed on the sunshade as material characteristic are normal.

⚠ CAUTION

- **Do not pull or push the sunshade by hand. It could cause sunshade failure.**
- **Close the sunroof when driving through dusty roads. Dust may cause a malfunction of the vehicle system.**

✻ NOTICE

Only the front glass of the panorama sunroof opens and closes.

Sliding the sunroof

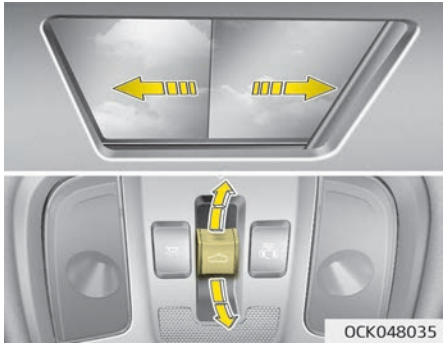

When the sunshade is closed

Pull the sunroof control lever backward to the 2nd detent position, the sunshade and sunroof glass will slide all the way open. To stop the sunroof movement at any point, push the sunroof control lever momentarily.

When the sunshade is opened

Pull the sunroof control lever backward to the 1st or 2nd detent position, the sunroof glass will slide all the way open. To stop the sunroof movement at any point, push the sunroof control lever momentarily.

Tilting the sunroof



When the sunshade is closed

Push the sunroof control lever upward, the sunshade will slide open then the sunroof glass will tilt.
To stop the sunroof movement at any point, push the sunroof control lever momentarily.

When the sunshade is opened

Push the sunroof control lever upward, the sunroof glass will tilt.
To stop the sunroof movement at any point, push the sunroof control lever momentarily.

Closing the sunroof

To close the sunroof glass with the sunshade

Push the sunroof control lever forward to the 2nd detent position. The sunroof glass and sunshade will close automatically.
To stop the sunroof movement at any point, push the sunroof control lever momentarily.

To close the sunroof glass only

Push the sunroof control lever forward. The sunroof glass will close automatically.
To stop the sunroof movement at any point, push the sunroof control lever momentarily.

Automatic reversal

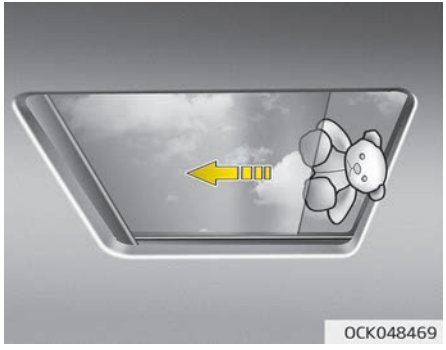

If an object or part of the body is detected while the sunroof glass or sunshade is closing automatically, it will reverse the direction, and then stop.
The auto reverse function does not work if a tiny obstacle is between the sliding glass or sunshade and the sunroof sash. You should always check that all passengers and objects are away from the sunroof before closing it.

Objects less than 4mm (0.16inch) in diameter caught between the sunroof glass and the front glass channel may not be detected by the automatic reverse glass and the glass will not stop and reverse direction.

⚠ WARNING

■ Sunroof

- **Be careful that no head, hands and body parts are obstructed by a closing sunroof.**
- **Do not extend the face, neck, arms or body outside the sunroof while driving.**
- **Make sure your hands and head are safely out of the way before closing a sunroof.**
- **A sunroof is made of glass, therefore it may break in an accident. If you do not have your seat belt on, you may stick out of the broken glass and get injured or killed. For all passengers safety, have an appropriate protection on. (ex. seat belt, CRS, etc.)**

⚠ CAUTION

- **Periodically remove any dirt that may accumulate on the guide rail.**
- **If you drive with the sunroof opened right after a car wash or rain, water may get inside the vehicle.**

⚠ CAUTION

■ Sunroof motor damage

If you try to open the sunroof when the temperature is below freezing or when the sunroof is covered with snow or ice, the glass or the motor could be damaged.

Resetting the sunroof

Whenever the vehicle battery is disconnected or discharged, you must reset your sunroof system as follows:

1. Start the engine.
2. Close the sunshade and sunroof completely if opened.
3. Release the sunroof control lever.
4. Push the sunroof control lever forward in the direction of close until the sunroof slightly moves. Then, release the lever.
5. Push the sunroof control lever forward in the direction of close, until the sunroof operates as follows again:

   sunshade open ➟ Glass slide open ➟ Glass slide close ➟ Sunshade close

   Then, release the lever.

When this is complete, the sunroof system has been reset.

✻ NOTICE

If you do not reset the sunroof, it may not work properly.

STEERING WHEEL

Electronic power steering

Power steering uses the motor to assist you in steering the vehicle. If the engine is off or if the power steering system becomes inoperative, the vehicle may still be steered, but it will require increased steering effort.
The motor driven power steering is controlled by the power steering control unit which senses the steering wheel torque and vehicle speed to command the motor.
The steering effort becomes heavier as the vehicle's speed increases and becomes lighter as the vehicle's speed decreases for better control of the steering wheel.
Should you notice any change in the effort required to steer during normal vehicle operation, have the system checked by a professional workshop. Kia recommends to visit an authorized Kia dealer/service partner.

✻ NOTICE

The following symptoms may occur during normal vehicle operation:

(Continued)

(Continued)

- The EPS warning light does not illuminate.
- The steering effort is high immediately after turning the Engine Start/Stop Button is ON. This happens as the EPS system performs the diagnostics. When the diagnostics is completed, the steering effort will return to its normal condition.
- A click noise may be heard from the EPS relay after the Engine Start/Stop Button is turned to the ON or OFF position.
- Motor noise may be heard when the vehicle is at a stop or at a low driving speed.
- The steering effort can suddenly increase, if the operation of the EPS system is stopped to prevent serious accidents when EPS control unit detects malfunction of the EPS system by self-diagnosis.

(Continued)

(Continued)

- The steering effort increases if the steering wheel is rotated continuously when the vehicle is not in motion. However, after a few minutes, it will return to its normal conditions.
- If the Electronic Power Steering System does not operate normally, the warning light will illuminate on the instrument cluster. The steering wheel may become difficult to control or operate abnormally. In this case, have the system inspected by a professional workshop. Kia recommends to visit an authorized Kia dealer/service partner.
- When you operate the steering wheel in low temperature, abnormal noise could occur. If temperature rises, the noise will disappear. This is a normal condition.

Tilt & telescopic steering

A tilt and telescopic steering wheel allows you to adjust the steering wheel before you drive. You can also raise it to give your legs more room when you exit and enter the vehicle.

The steering wheel should be positioned so that it is comfortable for you to drive, while permitting you to see the instrument panel warning lights and gauges.

⚠ WARNING

- **Never adjust the angle of the steering wheel while driving. You may lose steering control and cause severe personal injury, death or accidents.**
- **After adjusting, push the steering wheel both up and down to be certain it is locked in position.**

Manual type

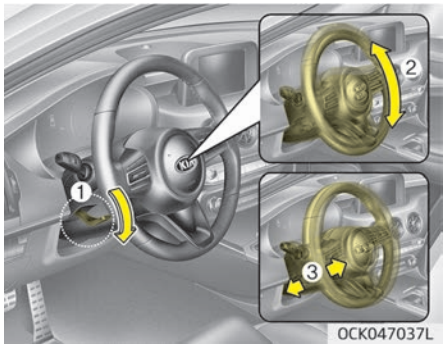

To change the steering wheel angle, pull down the lock release lever (1), adjust the steering wheel to the desired angle (2) and height (3), then pull up the lock-release lever to lock the steering wheel in place. Be sure to adjust the steering wheel to the desired position before driving.

✻ NOTICE

After adjustment, sometimes the lock-release lever may not lock the steering wheel.

(Continued)

(Continued)

It is not a malfunction. This occurs when two gear teeth meet head on engage. In this case, adjust the steering wheel again and then lock the steering wheel.

Electric type

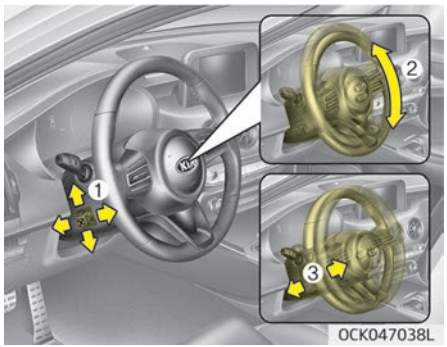

Adjust the steering wheel angle (2) and position (3) with the switch (1). Never adjust the position of the steering wheel while driving.

Heated steering wheel (if equipped)

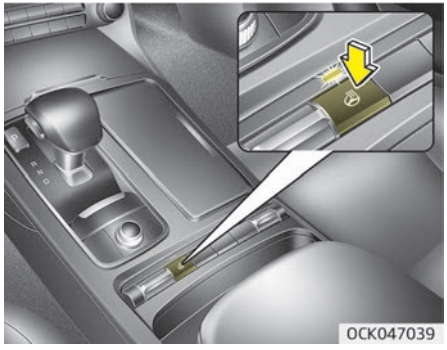

When the Engine Start/Stop Button is in the ON position, pressing the heated steering wheel button warms the steering wheel. The indicator on the button will illuminate.
To turn the heated steering wheel off, press the button once again. The indicator on the button will turn off.

✻ NOTICE

The heated steering wheel will turn off automatically approximately 30 minutes after the heated steering wheel is turned on.

⚠ CAUTION

Do not install any grip to operate the steering wheel. This causes damage to the heated steering wheel system.

Horn



To sound the horn, press the area indicated by the horn symbol on your steering wheel (see illustration). The horn will operate only when this area is pressed. Check the horn regularly to be sure it operates properly.

⚠ CAUTION

- **Do not strike the horn severely to operate it, or hit it with your fist. Do not press on the horn with a sharp-pointed object.**
- **When cleaning the steering wheel, do not use an organic solvent such as thinner, benzene, alcohole and gasoline. Doing so may damage the steering wheel.**

MIRRORS

Inside rearview mirror

Adjust the rearview mirror so that the center view through the rear window is seen. Make this adjustment before you start driving.

⚠ WARNING

■ Rear visibility

Do not place objects in the rear seat or cargo area which would interfere with your vision through the rear window.

⚠ WARNING

Do not adjust the rearview mirror while the vehicle is moving. This could result in loss of control, and an accident which could cause death, serious injury or property damage.

⚠ WARNING

Do not modify the inside mirror and don't install a wide mirror. It could result in injury, during an accident or deployment of the air bag.

Electrochromic mirror (ECM)

The electric rearview mirror automatically controls the glare from the headlights of the vehicles behind you in nighttime or low light driving conditions. The sensor mounted in the mirror senses the light level around the vehicle, and automatically controls the headlight glare from the vehicles behind you.

When the engine is running, the glare is automatically controlled by the sensor mounted in the rearview mirror.

Whenever the shift lever is shifted into reverse (R), the mirror will automatically go to the brightest setting in order to improve the drivers view behind the vehicle.

⚠ CAUTION

When cleaning the mirror, use a paper towel or similar material dampened with glass cleaner. Do not spray glass cleaner directly on the mirror. It may cause the liquid cleaner to enter the mirror housing.



To operate the electric rearview mirror:

- The mirror defaults to the ON position whenever the Engine Start/Stop Button is in the ON position.

- Press the ON/OFF button (1) to turn the automatic dimming function off. The mirror indicator light (2) will turn off.
  Press the ON/OFF button (1) to turn the automatic dimming function on. The mirror indicator light (2) will illuminate.

❊ (2) : Indicator, (3) : Sensor

Outside rearview mirror

Be sure to adjust the mirror angles before driving.
Your vehicle is equipped with both left-hand and right-hand outside rearview mirrors. The mirrors can be adjusted remotely with the remote switch. The mirror heads can be folded back to prevent damage during an automatic car wash or when passing through a narrow street.

⚠ WARNING

■ Rearview mirrors

- **The outside rearview mirror is convex. Objects seen in the mirror are closer than they appear.**

(Continued)

(Continued)

- **Use your interior rearview mirror or direct observation to determine the actual distance of following vehicles when changing lanes.**

⚠ CAUTION

Do not scrape ice off the mirror face; this may damage the surface of the glass. If ice should restrict the movement of the mirror, do not force the mirror for adjustment. To remove ice, use a deicer spray, or a sponge or soft cloth with warm water.

⚠ CAUTION

If the mirror is jammed with ice, do not adjust the mirror by force. Use an approved spray de-icer (not radiator antifreeze) to release the frozen mechanism or move the vehicle to a warm place and allow the ice to melt.

⚠ WARNING

Do not adjust or fold the outside rearview mirrors while the vehicle is moving. This could result in loss of control, and an accident which could cause death, serious injury or property damage.

Remote control

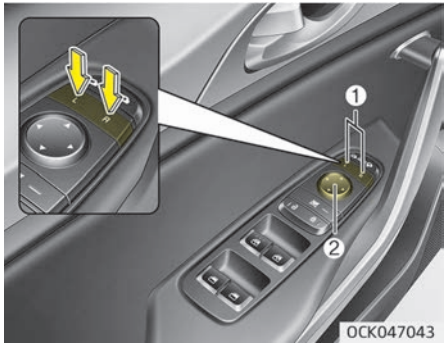

The electric remote control mirror switch allows you to adjust the position of the left and right outside rearview mirrors. To adjust the position of either mirror, press the R or L button (1) to select the right side mirror or the left side mirror, then press a corresponding point (▲) on the mirror adjustment control (2) to position the selected mirror up, down, left or right.
After adjustment, press the R or L button again to prevent the inadvertent adjustment.

⚠ CAUTION

- **The mirrors stop moving when they reach the maximum adjusting angles, but the motor continues to operate while the switch is pressed. Do not press the switch longer than necessary, the motor may be damaged.**
- **Do not attempt to adjust the outside rearview mirror by hand. Doing so may damage the parts.**

Folding the outside rearview mirror

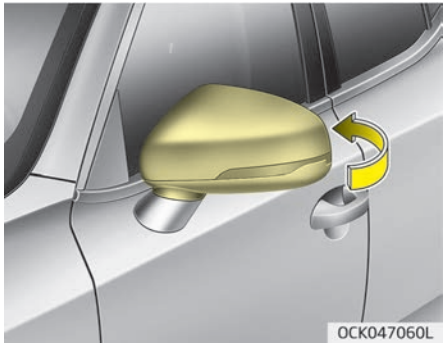

Manual type

To fold the outside rearview mirror, grasp the housing of the mirror and then fold it toward the rear of the vehicle.



Electric type

The outside rearview mirror can be folded or unfolded by pressing the switch as below.
Left (1) : The mirror will unfold.
Right (2) : The mirror will fold.
Center (AUTO, 3) :
The mirror will fold or unfold automatically as follows:
- The mirror will fold or unfold when the door is locked or unlocked by the smart key.

- The mirror will fold or unfold when the door is locked or unlocked by the button on the outside door handle.
- The mirror will unfold when you approach the vehicle (all doors closed and locked) with a smart key in possession. (if equipped)

⚠ CAUTION

The electric type outside rearview mirror operates even though the Engine Start/Stop button is in the OFF position.
However, to prevent unnecessary battery discharge, do not adjust the mirrors longer than necessary while the engine is not running.

⚠ CAUTION

In case it is an electric type outside rearview mirror, don't fold it by hand. It could cause motor failure.

Reverse parking aid function (if equipped)

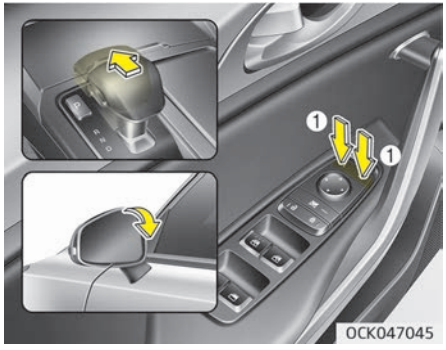

When you shift the shift lever to the R (Reverse) position, the outside rearview mirror(s) will move downward to aid reverse parking. According to the position of the outside rearview mirror switch, the outside rearview mirror(s) will operate as follows:

Left or Right

When the remote control outside rearview mirror switch is in the left or right position, both outside rearview mirrors will move downward.

Neutral

When neither switch is selected, the outside rearview mirrors will not move.

The outside rearview mirrors will automatically revert to their original positions under the following conditions:

1. Engine start/stop button is turned to the ACC or OFF position.
2. The shift lever is moved to any position except R (Reverse).
3. The remote control outside rearview mirror switch is not selected.

INSTRUMENT CLUSTER

■ Type A



■ Type B



OCK048100L/OCK048101L

1. Tachometer
2. Speedometer
3. Engine coolant temperature gauge
4. Fuel gauge
5. Warning and indicator lights
6. LCD display

✻ The actual cluster in the vehicle may differ from the illustration.
For more information, refer to “Gauges” on page 4-55.

■ Type C



■ Type D



OCK048445L/OCK048446L

1. Tachometer
2. Speedometer
3. Engine coolant temperature gauge
4. Fuel gauge
5. Warning and indicator lights
6. LCD display

✻ The actual cluster in the vehicle may differ from the illustration. For more information, refer to "Gauges" on page 4-55.

Instrument cluster control

Adjusting instrument cluster illumination (if equipped)

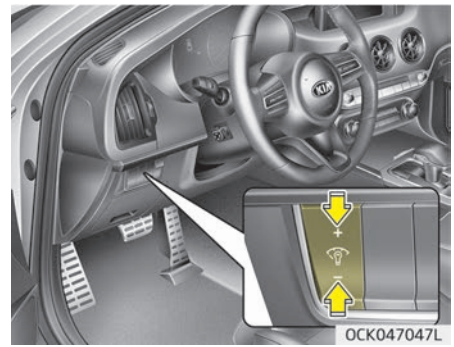

OCK047047L

⚠ WARNING

Never adjust the instrument cluster while driving. This could result in loss of control and lead to an accident that may cause death, serious injury, or property damage.

The brightness of the instrument panel illumination is changed by pressing the illumination control button (“+” or “–”) when Engine Start/Stop button is ON, or the tail lights are turned on.



- If you hold the illumination control button (“+” or “–”), the brightness will be changed continuously.
- If the brightness reaches to the maximum or minimum level, an alarm will sound.

LCD display control

■ Type A

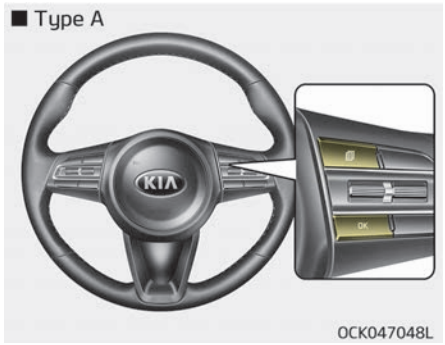

■ Type B

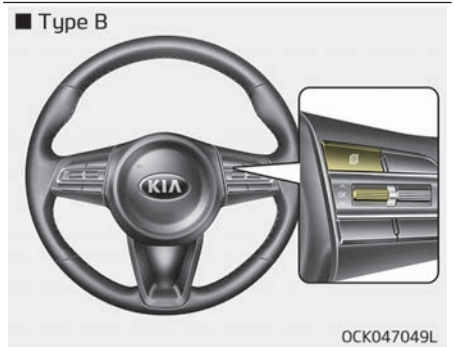

The LCD display modes can be changed by using the control buttons on the steering wheel.

1. : MODE button for changing modes
2. ∧ / ∨ /OK: SELECT scroll switch for setting the selected item and RESET scroll switch for reset

✻ For the LCD modes, refer to “LCD display” on page 4-60.

Gauges

Speedometer

■ Type A

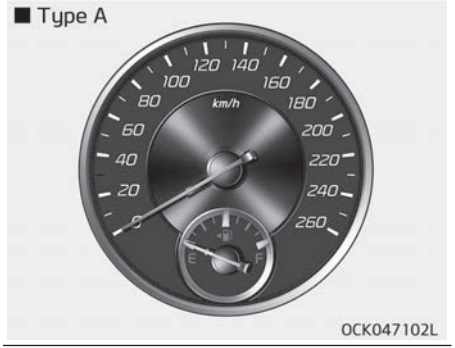

OCK047102L

■ Type B



OCK047107

The speedometer indicates the speed of the vehicle and is calibrated in miles per hour (mph) and/or kilometers per hour (km/h).

Tachometer

■ Type A



■ Type B



OCK047103/OCK047104

The tachometer indicates the approximate number of engine revolutions per minute (rpm).
Use the tachometer to select the correct shift points and to prevent lugging and/or over-revving the engine.

⚠ CAUTION

Do not operate the engine within the tachometer's RED ZONE. This may cause severe engine damage.

Engine coolant temperature gauge

■ Type A



OCK047105

■ Type B



OCK047105L

This gauge indicates the temperature of the engine coolant when the Engine Start/Stop Button is ON.

⚠ CAUTION

If the gauge pointer moves beyond the normal range area toward the "130 or H" position, it indicates overheating that may damage the engine.
Do not continue driving with an overheated engine. If your vehicle overheats, refer to "If the engine overheats" on page 6-07.

⚠ WARNING

Never remove the radiator cap when the engine is hot. The engine coolant is under pressure and could severely burn. Wait until the engine is cool before adding coolant to the reservoir.

Fuel gauge

■ Type A



OCK047106

■ Type B



OCK047106L

This gauge indicates the approximate amount of fuel remaining in the fuel tank.

✻ NOTICE

- The fuel tank capacity is given in "Recommended lubricants and capacities" on page 8-13.
- The fuel gauge is supplemented by a low fuel warning light, which will illuminate when the fuel tank is nearly empty.
- On inclines or curves, the fuel gauge pointer may fluctuate or the low fuel warning light may come on earlier than usual due to the movement of fuel in the tank.

⚠ WARNING

■ Fuel gauge

Running out of fuel can expose vehicle occupants to danger.
You must stop and obtain additional fuel as soon as possible after the warning light comes on or when the gauge indicator comes close to the "0 or E (Empty)" level.

⚠ CAUTION

Avoid driving with an extremely low fuel level. Running out of fuel could cause the engine to misfire damaging the catalytic converter.

Odometer

■ Type A



OCK047111

■ Type B



OCK047112

The odometer Indicates the total distance that the vehicle has been driven and should be used to determine when periodic maintenance should be performed.

- Odometer range : 0 ~ 1,599,999 km or 0 ~ 999,999 mi

Outside temperature

■ Type A

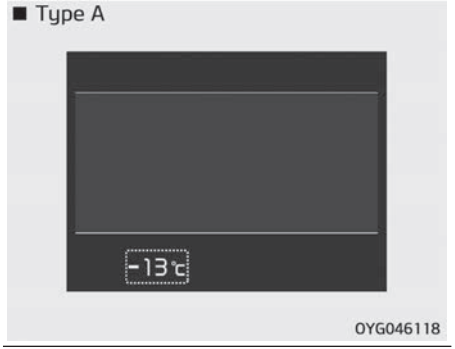

OYG046118

■ Type B

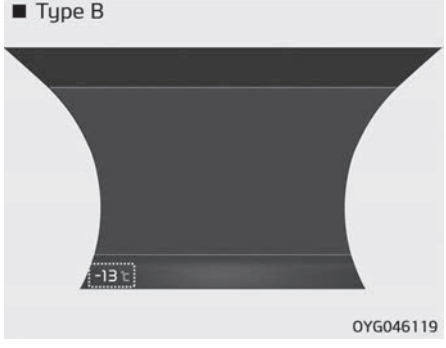

OYG046119

This gauge indicates the current outside air temperatures by 1°C (1°F).

- Temperature range : -40°C ~ 60°C (-40°F ~ 140°F)

The outside temperature on the display may not change immediately like a general thermometer to prevent the driver from being inattentive.
The temperature unit can be changed by using the "User Settings" mode of the LCD display.

❋ For more details, refer to "LCD display" on page 4-60.

Transaxle shift indicator

Automatic transaxle shift indicator

■ Type A



OCK047128

■ Type B



OYG046121

This indicator displays which automatic transaxle shift lever is selected.

- Park: P

- Reverse: R
- Neutral: N
- Drive: D
- Sports Mode : 1, 2, 3, 4, 5, 6, 7, 8

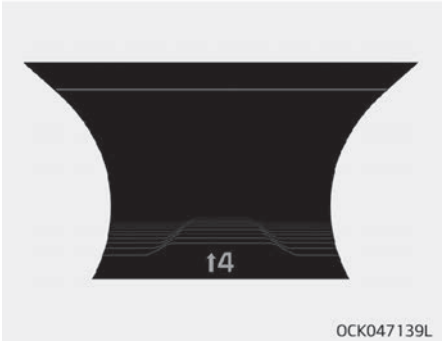

Automatic transaxle shift indicator in Sports Mode (if equipped)

In the Sports Mode, this indicator informs which gear is desired while driving to save fuel.

- Shifting up:
  ▲2, ▲3, ▲4, ▲5, ▲6, ▲7, ▲8
- Shifting down:
  ▼1, ▼2, ▼3, ▼4, ▼5, ▼6, ▼7

For example

▲3: Indicates that shifting up to the 3rd gear is desired (currently the shift lever is in the 2nd or 1st gear).

▼4: Indicates that shifting down to the 4th gear is desired (currently the shift lever is in the 5th or 6th gear).

When the system is not working properly, the indicator is not displayed.

LCD DISPLAY (IF EQUIPPED)

LCD modes

Modes	Symbol	Explanation
SPORT mode (if equipped)		This mode displays Gauge, Lap Timer, G-Force.
Trip Computer		This mode displays driving information like the tripmeter, fuel economy, and so on. For more details, refer to “Trip Computer” on page 4-67.
Turn by Turn mode (if equipped)		This mode displays the state of the navigation.
LKA/SCC mode		This mode displays the state of the Smart Cruise Control (SCC) and Lane keeping Assist (LKA). For more details, refer to “Smart Cruise Control (SCC)” on page 5-82 and “Lane keeping Assist (LKA)” on page 5-106.
User Settings		On this mode, you can change settings of the doors, lamps and so on.
Master warning mode		This mode informs of warning messages related to Low tire pressure or malfunction of Blind-spot Collision Warning and so on.

❈ For controlling the LCD modes, refer to “LCD display control” on page 4-54.

Sport mode (if equipped)

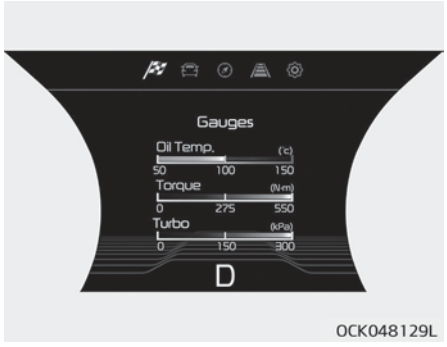

OCK048129L



OCK047130L

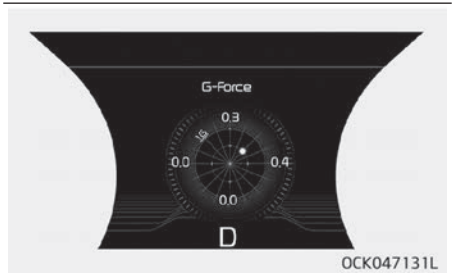

OCK047131L

This mode displays Gauge, Lap Timer, G-Force.

Trip computer mode



OCK047113L

This mode displays driving information like the tripmeter, fuel economy, and so on.

✻ For more details, refer to "Trip Computer" on page 4-67.

Turn by turn (if equipped)



This mode displays the state of the navigation.

SCC with S&G/LKA mode (if equipped)

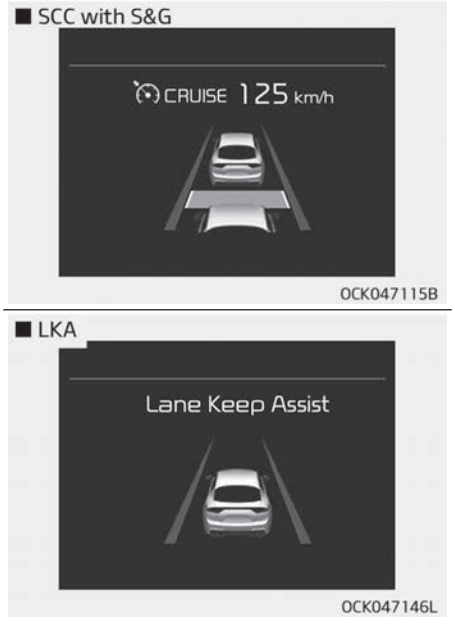

This mode displays the state of the Smart Cruise Control with Stop & Go and Lane Keeping Assist (LKA).

For more details, refer to "Smart Cruise Control with Stop & Go" on page 5-82 and "Lane Keeping Assist (LKA)" on page 5-106.

Service mode



When Service Required is set, the remaining distance/period to drive appears on the LCD screen.
From the point at which the remaining distance to drive amounts to 1,500 km or the remaining period amounts to 3 days, Service Required message automatically displays and remained on LCD screen for a number of seconds every time the engine start/stop button is ON.

With Service Required in place, Service Required Alarm message pops up when an aggregated amount of miles/time driven reaches a certain point.
With Service Required mode, press OK button for more than 1 sec. The values will return to initial setting values.

❈ ■ See User Settings

Mode in this chapter for further information about Service Required Setting.

❈ ■ Service Required Setting

Battery Cable Disconnection, Fuse Switch OFF, or Service Required Setting values (an amount of miles/time driven) can be randomly changed. In such cases, re-enter Service Required Setting values.

Master warning mode (if equipped)



- This warning light informs the driver the following situations

- LED head lamp malfunction (if equipped)
- Smart Cruise Control with Stop & Go malfunction (if equipped)
- Forward Collision-Avoidance Assist malfunction (if equipped)
- Blind-Spot Collision Warning radar blind (if equipped)
- Smart Cruise Control with Stop & Go radar blind (if equipped)
- Lamp malfunction
- High Beam Assist malfunction (if equipped)

The Master Warning Light illuminates if one or more of the above warning situations occur. At this time, the LCD Modes Icon will change from (⚙) to (⚠).
If the warning situation is solved, the master warning light will be turned off and the LCD Modes Icon will be changed back to its previous icon (⚙).

Distance to empty

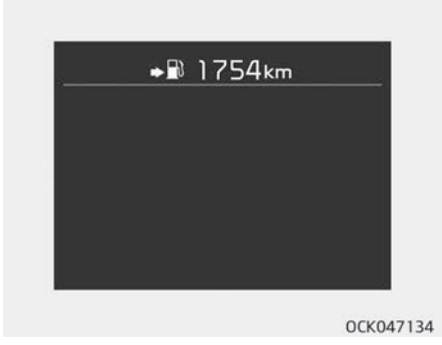

- The distance to empty is the estimated distance the vehicle can be driven with the remaining fuel.

- Distance range: 1~9,999 km or 1~9,999 mi.

• If the estimated distance is below 1 km (1 mi.), the trip computer will display "---" as distance to empty.

✻ NOTICE

- If the vehicle is not on level ground or the battery power has been interrupted, the distance to empty function may not operate correctly.
- The distance to empty may differ from the actual driving distance as it is an estimate of the available driving distance.
- The trip computer may not register additional fuel if less than 6 liters (1.6 gallons) of fuel are added to the vehicle.
- The fuel economy and distance to empty may vary significantly based on driving conditions, driving habits, and condition of the vehicle.

User settings mode

Description



On this mode, you can change setting of the doors, lamps, and so on.

⚠ WARNING

Do not adjust the User Setting while driving. You may lose your steering control and cause severe personal injury or accidents.

Shift to P to edit settings



This warning message appears if you try to adjust the User Settings while driving.

For your safety, change the User Settings after parking the vehicle, applying the parking brake and moving the shift lever to P (Park).

Head-Up Display (HUD) (if equipped)

• Head-Up Display : If this item is checked, Head-Up Display will be activated.

- Display Height : Adjust the height of the HUD image on the windshield glass.
- Rotation : Adjust the degree of the HUD rotation.
- Brightness : Adjust the intensity of the HUD brightness.
- Contents Select
  - Turn by Turn : If this item is checked, Turn by Turn will be activated.
  - Lane Keeping Assist: If this item is checked, LKA will be activated.
- Speedometer size : Small/ Medium/Large
- Speedometer color : White/Orange/Green

Driver Assistance (if equipped)

- Smart Cruise Control with Stop & Go Response (if equipped) :
  - Choose the sensitivity (slow, normal, fast) of the smart cruise control.

❊ For more details, refer to "Smart Cruise Control with Stop & Go" on page 5-82.

- Speed Limit Information Function (if equipped)
  - If this item is checked, the speed limit information function will be activated.

❊ For more details, refer to "Speed Limit Information Function" on page 5-75.

- Driver Attention Warning : close the alert stage (Off/Normal/Early stage) of the Driver Attention Warning.

❊ For more details, refer to "Driver Attention Warning (DAW) system" on page 5-120.

- Lane Keeping Assist (LKA, if equipped) :
  - Lane Departure Warning : To activate the lane departure warning function.
  - Standard LKA : To activate the standard LKA mode.
  - Active LKA : To activate the active LKA mode.

❊ For more details, refer to "Lane Keeping Assist (LKA) system" on page 5-106.

- Forward Collision-avoidance Assist (FCA, if equipped) :
  - To activate or deactivate the FCA system.

❊ For more details, refer to "Forward Collision-avoidance Assist (FCA) system" on page 5-60.

- Forward Collision Warning (FCW, if equipped)
  - Choose the sensitivity of the forward collision warning. (Late/ Normal/Early)

❊ For more details, refer to "Forward Collision-avoidance Assist (FCA) system" on page 5-60.

- Rear Cross-Traffic Collision Warning (if equipped)
  - If this item is checked, the rear cross-traffic collision Warning function will be activated.

❊ For more details, refer to "Blind-spot Collision Warning (BCW) system" on page 5-113.

Door/Tailgate

- Automatic Lock :
  - Disable : The auto door lock operation will be deactivated.

- Enable on Speed : All doors will be automatically locked when the vehicle speed exceeds 15 km/h (9.3 mph).
- Enable on Shift : All doors will be automatically locked if the automatic transaxle shift lever is shifted from the P (Park) position to the R (Reverse), N(Neutral), or D (Drive) position.

• Automatic Unlock :
- Disable : The auto door unlock operation will be canceled.
- Vehicle Off : All doors will be automatically unlocked when the Engine start/Stop Button is set to the OFF position.
- On Shift to P : All doors will be automatically unlocked if the automatic transaxle shift lever is shifted to the P (Park) position.

• Power Tailgate (if equipped)
- If this item is checked, the power tailgate function will be activated.

❉ For more details, refer to "Power tailgate" on page 4-18.

• Smart Tailgate (if equipped)
- If this item is checked, the smart tailgate function will be activated. If the power tailgate function is not activated, you cannot activate this function.

❉ For more details, refer to "Smart tailgate" on page 4-23.

Light

• One Touch Turn Signal:
- Off: The one touch turn signal function will be deactivated.
- 3, 5, 7 Flashes : The lane change signals will blink 3, 5 or 7 times when the turn signal lever is moved slightly.

❉ For more details, refer to "Light" on page 4-66.

• Ambient Light Brightness: Adjust the brightness of the ambient light.
- Off/Level 1, 2, 3, 4

• Ambient Light Color: Select the color of the ambient light.
- white, yellow, red, bluegreen, blue, violet

• Head Lamp Delay:
- If this item checked, the head lamp delay function will be activated.

• Travel Mode (if equipped) : If this item is checked, the traffic change function will be activated.

❉ For more details, refer to "Lighting" on page 4-101.

Sound

• Park Assist System Vol. (if equipped)
- Adjust the Park Assist System volume. (Level 1 ~ 3)

❉ For more details, refer to "Parking assist system" on page 4-88.

• Welcome Sound (if equipped) :
- If this item checked, the welcome sound function will be activated.

Convenience

• Seat Easy Access (if equipped)
- None : The seat easy access function will be deactivated.
- Normal/Extended : When you turn off the engine, the driver's seat will automatically move to rearward (Enhanced) for you to enter or exit the vehicle more comfortably.

If you change the Engine Start/Stop Button from OFF position to the ACC function, the driver's seat will return to the original position.

❉ For more details, refer to “Driver Position Memory System” on page 3-09.

- Steering Easy Access (if equipped)
  - On (checked) : The steering wheel will automatically move to the top of the steering column and when getting off and go to the last configured position when riding for the driver enter or exit the vehicle comfortably.
  - Off (unchecked) : The steering easy access function will be deactivated.

❉ For more details, refer to “Driver Position Memory System” on page 3-09.

- Welcome Mirror/Light (if equipped) :
  - If this item checked, the welcome Mirror/light function will be activated.
- Wireless charging system (if equipped) :
  - If this item checked, the wireless charging system function will be activated.
- Wiper/Light Display (if equipped) : If this item checked, the Wiper/Light Display will be activated.
- Gear Position Pop-up (if equipped) : If this item checked, the gear position pop-up display will be activated.
- Icy road warning (if equipped) : If this item checked, the Icy road warning display will be activated.

Service interval

- Service Interval
  To activate or deactivate the service interval function.
- Adjust Interval
  To adjust the interval by mileage-and period.
- Reset
  To reset the service interval function.

Other features

- Fuel Economy Auto Reset
  - If this item checked, the average fuel economy will reset automatically after refueling or after ignition.
- Fuel Economy Unit
  - Choose the fuel economy unit. (Km/L, L/100Km)
- Temperature Unit
  - Choose the temperature unit. (°C, °F)
- Tire Pressure Unit (if equipped)
  - Choose the tire pressure unit. (psi, kPa, bar)
- Torque Unit(if equipped)
  - Choose the torque unit. (N·m, lb·ft)

Language

Choose the language

Reset

You can reset the menus in the User Settings Mode. All menus in the User Settings Mode are initialized, except language and service interval.

Trip modes (trip computer)

The trip computer is a microcomputer-controlled driver information system that displays information related to driving.

❉ NOTICE

Some driving information stored in the trip computer (for example Average Vehicle Speed) resets if the battery is disconnected.

Trip modes

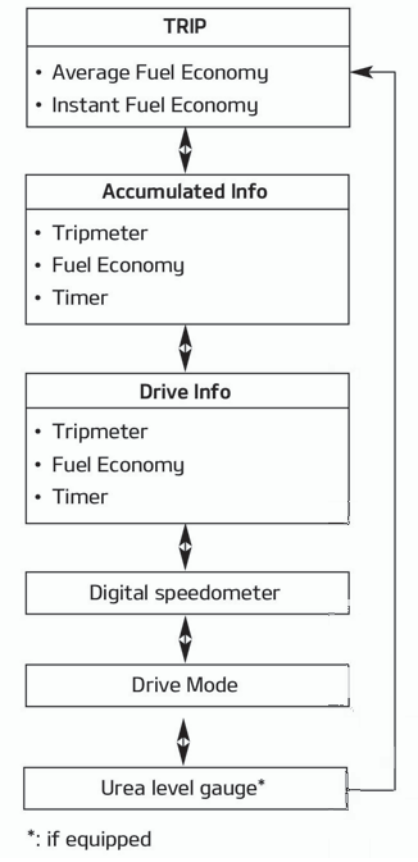

To change the trip mode, scroll the MOVE scroll switch (^ / v) in the trip computer mode.

Fuel economy

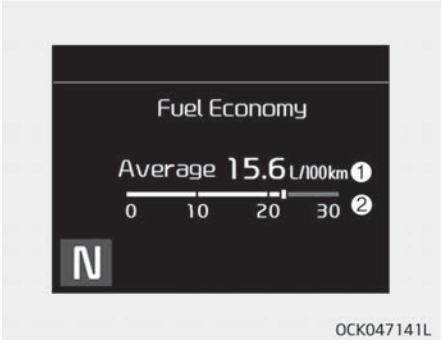

Average Fuel Economy (1)

- The average fuel economy is calculated by the total driving distance and fuel consumption since the last average fuel economy reset.
  - Fuel economy range: 0.0 ~ 99.9 L/100 km or MPG
- The average fuel economy can be reset both manually and automatically.

Manual reset

To clear the average fuel economy manually, press the OK button (reset) on the steering wheel for more than 1 second when the average fuel economy is displayed.

Automatic reset

To make the average fuel economy be reset automatically whenever refueling, select the "Fuel economy auto reset" mode in User Setting menu of the LCD display (Refer to "LCD display" on page 4-60).

- OFF - You may set to default manually by using the trip switch reset button.
- When driving - The vehicle will automatically set to default once 4 hours pass after the Engine Start/Stop Button is in the ACC or OFF position.
- When refueling - After refueling more than 6 liters and driving over 1 km/h, the vehicle will reset to default automatically.

✻ NOTICE

The average fuel economy is not displayed for more accurate calculation if the vehicle does not drive more than 10 seconds or 50 meters (0.03 miles) since the Engine Start/Stop Button is turned to ON.

Instant Fuel Economy (2)

- This mode displays the instant fuel economy during the last few seconds when the vehicle speed is more than 10 km/h (6.2 MPH).
  - Fuel economy range: 0.0 ~ 30 L/100 km or 0.0 ~ 50.0 MPG

Accumulated driving information mode



Displays accumulated information starting from mileage/fuel efficiency/time default point.

- Accumulated information is calculated after the vehicle has run for more than 300 meters.
- If you press "OK" button for more than 1 second after the Cumulative Information is displayed, the information will be reset.
- If the engine is running, even when the vehicle is not in motion, the information will be accumulated.

One time driving information mode



The vehicle will display Driving Information once per one ignition cycle.

- Fuel efficiency is calculated after the vehicle has run for more than 300 meters.
- The Driving Information will be reset 4 hours after ignition has been turned off. So, when the vehicle ignition is turned on within 4 hours, the information will not be reset.
- If you press "OK" button for more than 1 second after the Driving Information is displayed, the information will be reset.

- If the engine is running, even when the vehicle is not in motion, the information will be accumulated.

Digital speedometer

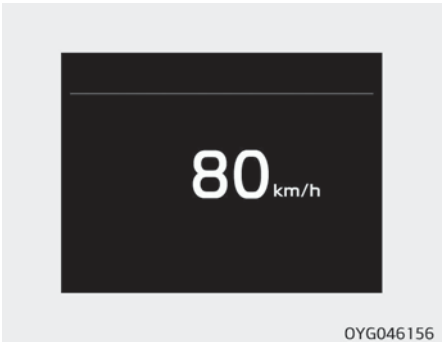

This mode displays the current speed of the vehicle.

Smart shift (if equipped)



This mode displays the currently selected drive mode.

Urea level gauge (for diesel engine)

■ Type A

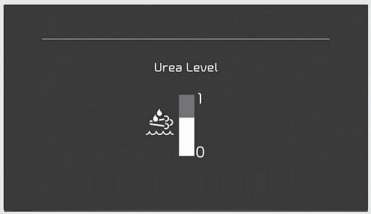

■ Type B

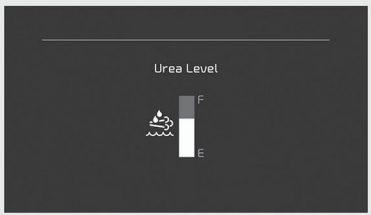

This mode displays the amount of the remaining urea solution in the urea solution tank.

Warning messages (if equipped)

Shift to P

- This warning message illuminates if you try to turn off the engine without the shift lever in P (Park) position.
- At this time, the Engine Start/Stop Button turns to the ACC position (If you press the Engine Start/Stop Button once more, it will turn to the ON position).

Low key battery

- This warning message illuminates if the battery of the smart key is discharged when the Engine Start/Stop Button changes to the OFF position.

Press brake pedal to start engine

- This warning message illuminates if the Engine Start/Stop Button changes to the ACC position twice by pressing the button repeatedly without depressing the brake pedal.
- It means that you should depress the brake pedal to start the engine.

Battery discharging due to external electrical devices

- The vehicle can detect self-discharge of the battery due to overcurrent that is generated by unauthorized electrical devices such as black box mounting during parking.
- Please note that functions such as ISG are limited and battery discharge problems may occur.
- If the warning continues even after external electrical devices are removed, have your vehicle inspected by a professional workshop. Kia recommends to contact an authorized Kia dealer/service partner.

Key not in vehicle

- This warning message illuminates if the smart key is not in the vehicle when you press the Engine Start/Stop Button.
- It means that you should always have the smart key with you.

Key not detected

- This warning message illuminates if the smart key is not detected when you press the Engine Start/Stop Button.

Press start button again

- This warning message illuminates if you can not operate the Engine Start/Stop Button when there is a problem with the Engine Start/Stop Button system.
- It means that you could start the engine by pressing the Engine Start/Stop Button once more.
- If the warning illuminates each time you press the Engine Start/Stop Button, have the vehicle inspected by a professional workshop. Kia recommends to visit an authorized Kia dealer/service partner.

Press start button with key

- This warning message illuminates if you press the Engine Start/Stop Button while the warning message “Key not detected” is illuminating.
- At this time, the immobilizer indicator light blinks.

Check BRAKE SWITCH fuse

- This warning message illuminates if the brake switch fuse is disconnected.

- It means that you should replace the fuse with a new one. If that is not possible, you can start the engine by pressing the Engine Start/Stop Button for 10 seconds in the ACC position.

Shift to P or N to start engine

- This warning message illuminates if you try to start the engine with the shift lever not in the P (Park) or N (Neutral) position.

✻ NOTICE

You can start the engine with the shift lever in the N (Neutral) position. But, for your safety, we recommend that you start the engine with the shift lever in the P (Park) position.

Door, Hood, Tailgate Open



- It means that any door, hood, or tailgate is open.
- The hood warning message will appear on the LCD display when hood is open.
  The warning chime will operate when the vehicle is being driven at or above 3 km/h (2 mph) with the hood open.

Sunroof open (if equipped)



- This warning message illuminates if you turn off the engine and then open the driver's door when the sunroof is open.

Icy road warning light (if equipped)



This warning pop-up message and light are to warn the driver the road may be icy.
When the Outside Temperature is below approximately 4°C (39°F),

- The warning light (including Outside Temperature and unit) blinks 5 times and then illuminates.
- The warning pop-up message displays, and the warning chime sounds once at the same time only once for each ignition cycle.

If this item is checked in "User settings", this function will be activated.

- The temperature on the Outside Temperature Gauge is below approximately 4°C (40°F).

✻ NOTICE

If the icy road warning light appears while driving, you should drive more attentively and safely refraining from over-speeding, rapid acceleration, sudden braking or sharp turning, etc.

Check headlight LED

This warning message illuminates if LED headlamp is malfunction.

Check headlight cooling fan

This warning message illuminates if LED headlamp cooling fan is malfunction.

Check shift lever

If there is a problem with the main function of the shift lever, this warning is displayed on the display.

Low washer fluid

- This warning message illuminates on the service reminder mode if the washer fluid level in the reservoir is nearly empty.
- It means that you should refill the washer fluid.

Turn on FUSE SWITCH

- This warning message illuminates if the fuse switch under the steering wheel is OFF.
- It means that you should turn the fuse switch on.

❊ For more details, refer to "Fuses" on page 7-64.

Check exhaust system (Diesel Particulate Filter warning for diesel engine)

This warning message illuminates if the DPF system has a malfunction. At this time, DPF warning light also blinks.
In this case, have the DPF system checked by a professional workshop. Kia recommends to visit an authorized Kia dealer/service partner.

❊ For more details, refer to "Warning lights" on page 4-75.

Low urea (for diesel engine)

This warning message illuminates if the urea solution level in the urea solution tank is nearly empty.

– When the SCR warning light illuminates. Refill urea solution as soon as possible.

✻ For more details, refer to “Low urea solution warning message” on page 7-118.

Check headlights (if equipped)

This warning message illuminates if there is a malfunction (burned-out bulb or circuit malfunction) with the head lights (high and low beam). In this case, have the vehicle inspected by a professional workshop. Kia recommends to visit an authorized Kia dealer/service partner.

✻ NOTICE

- When replacing the bulb, use the same wattage bulb.
  For more information, refer to “BULB WATTAGE” on page 8-07.

(Continued)

(Continued)

- If the different wattage bulb is equipped with the vehicle, this warning message is not displayed.

Low fuel

- This warning message illuminates if the fuel tank is nearly empty.
  - When the low fuel level warning light is illuminates.

Add fuel as soon as possible.

Check smart phone wireless charger (if equipped)

If a smart phone is still left on the wireless charging pad unattended, even when the Engine Start/Stop Button is in the ACC or OFF position and the instrument panel's one time driving information mode has finished, a warning message will lit up on the instrument panel.

✻ For more details, refer to “Smart Phone Wireless Charger” on page 4-144.

Warning lights

✻ NOTICE

■ Warning lights

Make sure that all warning lights are OFF after starting the engine. If any light is still ON, this indicates a situation that needs attention.

Air bag warning light



This warning light illuminates:

- Once you set the Engine Start/Stop Button to the ON position.
  - It illuminates for approximately 6 seconds and then goes off.
- When there is a malfunction with the SRS.
  In this case, have the vehicle inspected by a professional workshop. Kia recommends to visit an authorized Kia dealer/service partner.

Seat belt warning light



This warning light informs the driver that the seat belt is not fastened.

❈ For more details, refer to "Seat belts" on page 3-19.

Parking brake & brake fluid warning light



This warning light illuminates:

- Once you set the Engine Start/Stop Button to the ON position.
  - It illuminates for approximately 3 seconds
  - It remains on if the parking brake is applied.
- When the parking brake is applied.
- When the brake fluid level in the reservoir is low.
  - If the warning light illuminates with the parking brake released, it indicates the brake fluid level in reservoir is low.

If the brake fluid level in the reservoir is low:

1. Drive carefully to the nearest safe location and stop your vehicle.
2. With the engine stopped, check the brake fluid level immediately and add fluid as required (For more details, refer to "Brake Fluid" on page 7-42). Then check all brake components for fluid leaks. If any leak on the brake system is still found, the warning light remains on, or the brakes do not operate properly, do not drive the vehicle.
   In this case, have the vehicle towed to a professional workshop and inspected.
   Kia recommends to visit an authorized Kia dealer/service partner.

Dual-diagonal braking system

Your vehicle is equipped with dual-diagonal braking systems. This means you still have braking on two wheels even if one of the dual systems should fail.
With only one of the dual systems working, more than normal pedal travel and greater pedal pressure are required to stop the vehicle.
Also, the vehicle will not stop in as short a distance with only a portion of the brake system working.
If the brakes fail while you are driving, shift to a lower gear for additional engine braking and stop the vehicle as soon as it is safe to do so.

⚠ WARNING

■ Parking Brake & Brake Fluid Warning Light

Driving the vehicle with a warning light ON is dangerous. If the Parking Brake & Brake Fluid Warning Light illuminates with the parking brake released, it indicates that the brake fluid level is low.
In this case, have the vehicle inspected by a professional workshop. Kia recommends to visit an authorized Kia dealer/service partner.

Anti-lock brake system (ABS) warning light



This warning light illuminates:

- Once you set the Engine Start/Stop Button to the ON position.
  - It illuminates for approximately 3 seconds and then goes off.
- When there is a malfunction with the ABS (The normal braking system will still be operational without the assistance of the anti-lock brake system).
  In this case, have the vehicle inspected by a professional workshop. Kia recommends to visit an authorized Kia dealer/service partner.

Electronic brake force distribution (EBD) system warning light





These two warning lights illuminate at the same time while driving:

- When the ABS and regular brake system may not work normally.
  In this case, have the vehicle inspected by a professional workshop. Kia recommends to visit an authorized Kia dealer/service partner.

⚠ WARNING

■ Electronic Brake force Distribution (EBD) System Warning Light

(Continued)

(Continued)

When both ABS and Parking Brake & Brake Fluid Warning Lights are on, the brake system will not work normally and you may experience an unexpected and dangerous situation during sudden braking.
In this case, avoid high speed driving and abrupt braking.
Have the vehicle inspected by a professional workshop as soon as possible. Kia recommends to visit an authorized Kia dealer/service partner.

✻ NOTICE

■ Electronic Brake force Distribution (EBD) System Warning Light

When the ABS Warning Light is on or both ABS and Parking Brake & Brake Fluid Warning Lights are on, the speedometer, odometer, or tripmeter may not work. Also, the EPS Warning Light may illuminate and

(Continued)

(Continued)

the steering effort may increase or decrease.
In this case, have the vehicle inspected by a professional workshop. Kia recommends to visit an authorized Kia dealer/service partner.

Electronic power steering (EPS) warning light (if equipped)



This warning light illuminates:

- Once you set the Engine Start/Stop Button to the ON position.
  - It remains on until the engine is started.
- When there is a malfunction with the EPS.
  In this case, have the vehicle inspected by a professional workshop. Kia recommends to visit an authorized Kia dealer/service partner.

Malfunction indicator lamp (MIL)



This warning light illuminates:

- Once you set the Engine Start/Stop Button to the ON position.
  - It remains on until the engine is started.
- When there is a malfunction with the emission control system.
  In this case, have the vehicle inspected by a professional workshop. Kia recommends to visit an authorized Kia dealer/service partner.

⚠ CAUTION

■ Malfunction Indicator Lamp (MIL)

Driving with the Malfunction Indicator Lamp (MIL) on may cause damage to the emission control systems which could effect drivability and/or fuel economy.

⚠ CAUTION

■ Gasoline Engine

If the Malfunction Indicator Lamp (MIL) illuminates, potential catalytic converter damage is possible which could result in loss of engine power.
In this case, have the vehicle inspected by a professional workshop. Kia recommends to visit an authorized Kia dealer/service partner.

⚠ CAUTION

■ Diesel Engine

If the Malfunction Indicator Lamp (MIL) blinks, some error related to the injection quantity adjustment occurs which could result in loss of engine power, combustion noise and poor emission.
In this case, have the engine control system inspected by a professional workshop. Kia recommends to visit an authorized Kia dealer/service partner.

Charging system warning light



This warning light illuminates:

- Once you set the Engine Start/Stop Button to the ON position.
  - It remains on until the engine is started.
- When there is a malfunction with either the alternator or electrical charging system.

If there is a malfunction with either the alternator or electrical charging system:

1. Drive carefully to the nearest safe location and stop your vehicle.
2. Turn the engine off and check the alternator drive belt for looseness or breakage.
   If the belt is adjusted properly, there may be a problem in the electrical charging system.
   In this case, have the vehicle inspected by a professional workshop as soon as possible.
   Kia recommends to visit an authorized Kia dealer/service partner.

Engine oil pressure warning light



This warning light illuminates:

- Once you set the Engine Start/Stop Button to the ON position.
  - It remains on until the engine is started.
- When the engine oil pressure is low.

If the engine oil pressure is low:

1. Drive carefully to the nearest safe location and stop your vehicle.
2. Turn the engine off and check the engine oil level (For more details, refer to “Engine oil” on page 7-35). If the level is low, add oil as required.
   If the warning light remains on after adding oil or if oil is not available, have the vehicle inspected by a professional workshop as soon as possible. Kia recommends to visit an authorized Kia dealer/service partner.

⚠ CAUTION

■ Engine Oil Pressure Warning Light

- **If the engine does not stop immediately after the Engine Oil Pressure Warning Light is illuminated, severe damage could result.**
- **If the warning light stays on while the engine is running, it indicates that there may be serious engine damage or malfunction. In this case,**
  1. **Stop the vehicle as soon as it is safe to do so.**
  2. **Turn off the engine and check the oil level. If the oil level is low, fill the engine oil to the proper level.**
  3. **Start the engine again. If the warning light stays on after the engine is started, turn the engine off immediately. In this case, have the vehicle inspected by a professional workshop. Kia recommends to visit an authorized Kia dealer/service partner.**

Low fuel level warning light



This warning light illuminates:

When the fuel tank is nearly empty.

If the fuel tank is nearly empty:

Add fuel as soon as possible.

⚠ CAUTION

■ Low fuel level

Driving with the low fuel level warning light on or with the fuel level below "0 or E" can cause the engine to misfire and damage the catalytic converter (if equipped).

Low tire pressure warning light (if equipped)



This warning light illuminates:

- Once you set the Engine Start/Stop Button to the ON position.
  - It illuminates for approximately 3 seconds and then goes off.
- When one or more of your tires are significantly underinflated (The location of the underinflated tires are displayed on the LCD display).

❈ For more details, refer to "Tire Pressure Monitoring System (TPMS)" on page 6-08.

This warning light remains on after blinking for approximately 60 seconds or repeats blinking and off at the intervals of approximately 3 seconds:

- When there is a malfunction with the TPMS.
  In this case, have the vehicle inspected by a professional workshop as soon as possible. Kia recommends to visit an authorized Kia dealer/service partner.

❈ For more details, refer to "Tire pressure monitoring system (TPMS)" on page 6-08.

⚠ WARNING

■ Safe Stopping

(Continued)

(Continued)

- **The TPMS cannot alert you to severe and sudden tire damage caused by external factors.**
- **If you notice any vehicle instability, immediately take your foot off the accelerator pedal, apply the brakes gradually with light force, and slowly move to a safe position off the road.**

Fuel filter warning light (diesel engine)



This warning light illuminates:

- Once you set the Engine Start/Stop Button to the ON position.
  - It illuminates for approximately 3 seconds and then goes off.
- When water has accumulated inside the fuel filter.
  In this case, remove the water from the fuel filter.

❈ For more details, refer to "Fuel filter" on page 7-32.

⚠ CAUTION

■ Fuel filter warning light

- **When the Fuel Filter Warning Light illuminates, engine power (vehicle speed & idle speed) may decrease.**
- **If you keep driving with the warning light on, engine parts (injector, common rail, high pressure fuel pump) may be damaged. If this occurs, have the vehicle inspected by a professional workshop as soon as possible. Kia recommends to visit an authorized Kia dealer/service partner.**

Overspeed warning light (if equipped)



This warning light blinks:

- When you drive the vehicle more than 120 km/h.
  - This is to prevent you from driving your vehicle with overspeed.
  - The overspeed warning chime also sound for approximately 5 seconds.

LED headlamp warning light (if equipped)



This warning light illuminates:

- Once you set the Engine Start/Stop Button to the ON position.
  - It illuminates for approximately 3 seconds and then goes off.
- When there is a malfunction with the LED headlamp.

In this case, have the vehicle inspected by a professional workshop. Kia recommends to visit an authorized Kia dealer/service partner.

This warning light blinks:

- When there is a malfunction with a LED headlamp related part.

In this case, have the vehicle inspected by a professional workshop. Kia recommends to visit an authorized Kia dealer/service partner.

⚠ CAUTION

■ LED Headlamp Warning Light

Continuous driving with the LED Headlamp Warning Light on or blinking can reduce LED headlamp (low beam) life.

Forward Collision-avoidance Assist Warning light (FCA, if equipped)



This indicator light illuminates:

- When there is a malfunction with the FCA.

In this case, have the vehicle inspected by a professional workshop. Kia recommends to visit an authorized Kia dealer/service partner.

All Wheel Drive (AWD) Warning Light (if equipped)



This indicator light illuminates:

- When there is a malfunction with the AWD system.

In this case, have the vehicle inspected by a professional work shop. Kia recommends to visit an authorized Kia dealer/service partner.

Master Warning Light



This indicator light illuminates:

- When there is a malfunction on the pre-safe seat belt, electronic control suspension, or Smart Cruise Control with Stop & Go or other systems etc. To identify the details of the warning, look at the LCD display.

Dynamic Bending Light (DBL) Warning Light (if equipped)



This warning light blinks:

- When there is a malfunction with the Dynamic Bending Light (DBL).

If there is a malfunction with the Dynamic Bending Light (DBL):

1. Drive carefully to the nearest safe location and stop your vehicle.
2. Turn the engine off and restart the engine. If the warning light remains on, have the vehicle inspected by a professional workshop. Kia recommends to visit an authorized Kia dealer/service partner.

Electronic parking brake (EPB) warning light (if equipped)



This warning light illuminates:

- Once you set the Engine Start/Stop Button to the ON position.
  - It illuminates for approximately 3 seconds and then goes off.
- When there is a malfunction with the EPB.
  In this case, have the vehicle inspected by a professional workshop. Kia recommends to visit an authorized Kia dealer/service partner.

✻ NOTICE

■ Electronic Parking Brake (EPB) Warning Light

(Continued)

(Continued)

The Electronic Parking Brake (EPB) Warning Light may illuminates when the Electronic Stability control (ESC) Indicator Light comes on to indicates that the ESC is not working properly (This does not indicate malfunction of the EPB).

Exhaust system (GPF) warning light (Gasoline Engine) (if equipped)



This warning light illuminates:

- When there is a malfunction with Gasoline Particulate Filter (GPF) system.
- When this warning light illuminates, it may turn off after driving the vehicle:
  - The vehicle should be driven for more than 30 minutes at a speed of 80 km/h (50 mph) and faster.
  - Ensure the following conditions are all met: safe road conditions, transmission 3rd gear or above, and engine speed of 1,500 - 4,000 rpm.

If this warning light blinks in spite of the procedure (at this time the LCD warning message will be displayed), have the GPF system checked by a professional workshop. Kia recommends to visit an authorized Kia dealer/service partner.

⚠ CAUTION

■ Gasoline Engine with GPF (if equipped)

If you continue to drive with the GPF warning light blinking for a long time, the GPF system can be damaged and fuel consumption can worsen.

Exhaust system (DPF) warning light (diesel engine)(if equipped)



This warning light illuminates:

- When there is a malfunction with Diesel Particulate Filter (DPF) system.
- When this warning light illuminates, it may turn off after driving the vehicle:
  - at more than 60 km/h (37 mph), or
  - at more than 2nd gear with 1500 ~ 2000 engine rpm for a certain time (for about 25 minutes).

If this warning light blinks in spite of the procedure (at this time the LCD warning message will be displayed), have the DPF system checked by a professional workshop. Kia recommends to visit an authorized Kia dealer/service partner.

⚠ CAUTION

■ Diesel Engine with DPF (if equipped)

If you continue to drive with the DPF warning light blinking for a long time, the DPF system can be damaged and fuel consumption can increase.

SCR warning light (Diesel Engine) (if equipped)



This warning light illuminates:

- When the urea solution tank is nearly empty.

If the urea solution tank is nearly empty:

- Refill urea solution as soon as possible.

✻ For more details, refer to “Low urea solution warning message” on page 7-118.

Indicator lights

Electronic stability control (ESC) indicator light (if equipped)



This indicator light illuminates:

- Once you set the Engine Start/Stop Button to the ON position.
  - It illuminates for approximately 3 seconds and then goes off.
- When there is a malfunction with the ESC system.
  In this case, have the vehicle inspected by a professional workshop. Kia recommends to visit an authorized Kia dealer/service partner.

This indicator light blinks:

While the ESC is operating.

✻ For more details, refer to “Electronic stability control (ESC)” on page 5-52.

Electronic stability control (ESC) OFF indicator light (if equipped)



This indicator light illuminates:

- Once you set the Engine Start/Stop Button to the ON position.
  - It illuminates for approximately 3 seconds and then goes off.
- When you deactivate the ESC system by pressing the ESC OFF button.

✻ For more details, refer to "Electronic stability control (ESC)" on page 5-52.

Auto stop indicator (if equipped)



This indicator will illuminate when the engine enters the Idle Stop mode of the ISG (Idle Stop and Go) system.
When the automatic starting occurs, the auto stop indicator on the cluster will blink for 5 seconds.

✻ For more details, refer to "ISG (Idle Stop and Go) system" on page 5-98.

✻ NOTICE

When the engine automatically starts by the ISG system, some warning lights (ABS, ESC, ESC OFF, EPS or Parking brake warning light) may turn on for a few seconds.
This happens because of the low battery voltage. It does not mean the system is malfunctioning.

Immobilizer indicator light (with smart key) (if equipped)



This indicator light illuminates for up to 30 seconds:

- When the vehicle detects the smart key in the vehicle properly while the Engine Start/Stop Button is ACC or ON.
  - At this time, you can start the engine.
  - The indicator light goes off after starting the engine.

This indicator light blinks for a few seconds:

- When the smart key is not in the vehicle.
  - At this time, you can not start the engine.

This indicator light illuminates for 2 seconds and goes off:

- When the vehicle cannot detect the smart key which is in the vehicle while the Engine Start/Stop Button is ON.
  In this case, have the vehicle inspected by a professional workshop. Kia recommends to visit an authorized Kia dealer/service partner.

This indicator light blinks:

- When the battery of the smart key is weak.
  - At this time, you cannot start the engine. However, you can start the engine if you press the Engine Start/Stop Button with the smart key. (For more details, refer to "Starting the engine" on page 5-09).

- When there is a malfunction with the immobilizer system.
  In this case, have the vehicle inspected by a professional workshop. Kia recommends to visit an authorized Kia dealer/service partner.

Turn signal indicator light



This indicator light blinks:

- When you switch on the turn signal light on.

If any of the following occurs, there may a malfunction with the turn signal system. In this case, have the vehicle inspected by a professional workshop. Kia recommends to visit an authorized Kia dealer/service partner.

- The indicator light does not blink but illuminates.
- The indicator light blinks more rapidly.
- The indicator light does not illuminate at all.

Low beam indicator light



This indicator light illuminates:

- When the headlights are on.

High beam indicator light



This indicator light illuminates:

- When the headlights are on and in the high beam position
- When the turn signal lever is pulled into the Flash-to-Pass position.

Light ON indicator light



This indicator light illuminates:

- When the tail lights or headlights are on.

Rear fog indicator light (if equipped)



This indicator light illuminates:

- When the rear fog lights are on.

High beam assist indicator (if equipped)



This warning light illuminates:

- When the high-Beam is on with the light switch in the AUTO light position.
- If your vehicle detects oncoming or preceding vehicles, the high beam assist system will switch the high beam to low beam automatically.

❊ For more details, refer to “High beam operation” on page 4-103.

Glow indicator light (diesel engine)



This indicator light illuminates:

- When the engine is being preheated with the Engine Start/Stop Button in the ON position.
  - The engine can be started after the glow indicator light goes off.
  - The illumination time varies with the engine coolant temperature, air temperature, and battery condition.

If the indicator light remains on or blinks after the engine has warmed up or while driving, there may a malfunction with the engine preheating system.
In this case, have the vehicle inspected by a professional workshop. Kia recommends to visit an authorized Kia dealer/service partner.

✻ NOTICE

■ Engine Preheating

If the engine does not start within 10 seconds after the preheating is completed, set the Engine Start/Stop Button to the LOCK or OFF position for 10 seconds and then to the ON position in order to preheat the engine again.

AUTO HOLD indicator light (if equipped)



This indicator light illuminates:

• [White]:

When you activate the auto hold system by pressing the AUTO HOLD button.

• [Green]:

When you stop the vehicle completely by depressing the brake pedal with the auto hold system activated.

• [Yellow]:

When there is a malfunction with the auto hold system.
In this case, have the vehicle inspected by a professional workshop. Kia recommends to visit an authorized Kia dealer/service partner.

❊ For more details, refer to “Auto Hold” on page 5-47.

LKA (Lane Keeping Assist) indicator (if equipped)



The LKA indicator will illuminate when you turn the lane keeping assist system on by pressing the LKA button.
If there is a problem with the system, the yellow LKA indicator will illuminate.

❊ For more details, refer to “Lane Keeping Assist (LKA) system” on page 5-106.

HEAD UP DISPLAY (HUD) (IF EQUIPPED)

Description



The head up display is a transparent display which projects a shadow of some information of the instrument cluster and navigation on the windshield glass.

- The head up display image on the windshield glass may be invisible when:
  - Sitting posture is bad.
  - Wearing a polarized sunglasses.
  - There is an object on the cover of the head up display.
  - Driving on a wet road.
  - An inadequate lighting is turned on inside the vehicle.
  - Any light comes from the outside.
  - Wearing an inadequate glasses to your eyesight.
- If the head up display image is not shown well, adjust the height, rotation or illumination of the head up display in the LCD Display.

❇ For more details, refer to "LCD Display" on page 4-60.

- When the head up display needs inspection or repair, Kia recommends to visit an authorized Kia dealer/service partner

⚠ WARNING

■ Head Up Display

- **Do not make the front windshield glass have window tint or other types of metallic coating. Otherwise, the head up display image may be invisible.**
- **Do not place any accessories on the crash pad or attach any objects on the windshield glass.**

(Continued)

(Continued)

- **As the Blind-spot Collision Warning (BCW) system is a supplemental device for your safe driving, it may be dangerous to rely on only the BCW information of the head up display image when changing the lane. Always pay attention to drive safely.**

⚠ CAUTION

When replacing the front windshield glass of the vehicles equipped with the head up display, replace it with a windshield glass designed for the head up display operation. Otherwise, duplicated images may be displayed on the windshield glass.

Head Up Display ON/OFF

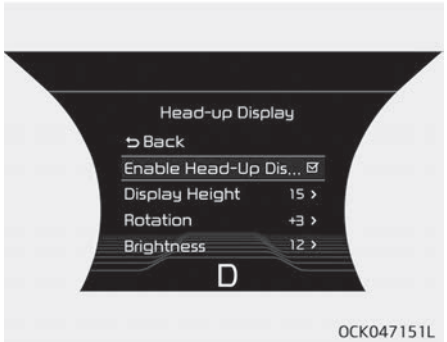

The HUD display will be activated or deactivated in user setting mode while engine is ON.

Head Up Display Information



1. Turn By Turn navigation information
2. Road signs (Except Europe)
3. Speedometer
4. Cruise setting speed
5. Smart Cruise Control (SCC) information
6. Blind-spot Collision Warning (BCW) system information
7. Warning lights (Low fuel)
8. AV mode information

Head Up Display Setting

On the LCD display, you can change the head up display settings as follows.

1. Display height
2. Rotation
3. Brightness
4. Content select
5. Speedometer size
6. Speedometer color

✻ For more details, refer to "LCD Display" on page 4-60.

PARKING DISTANCE WARNING - REVERSE (IF EQUIPPED)

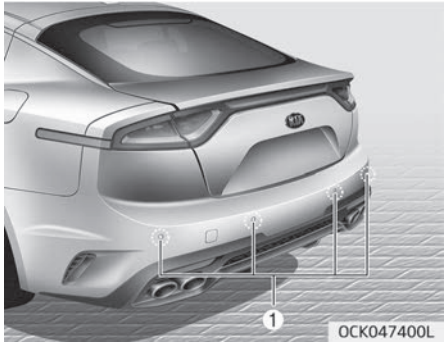

The rear parking distance warning - reverse assists the driver during backward movement of the vehicle by chiming if any object is sensed within a distance of 120 cm (47 in.) behind the vehicle.
This system is a supplemental system and it is not intended to nor does it replace the need for extreme care and attention of the driver. The sensing range and objects detectable by the back sensors (1) are limited. Whenever backing-up, pay as much attention to what is behind you as you would in a vehicle without a parking distance warning-reverse.

⚠ WARNING

The parking distance warning-reverse is a supplementary function only. The operation of the parking distance warning-reverse can be affected by several factors (including environmental conditions). It is the responsibility of the driver to always check the area behind the vehicle before and while backing up.

Operation of the parking distance warning-reverse

Operating condition

- This system will activate when the indicator on the parking distance warning-reverse OFF button is not illuminated. If you desire to deactivate the parking distance warning-reverse, press the distance warning-reverse OFF button again. (The indicator on the button will illuminate.) To turn the system on, press the button again. (The indicator on the button will go off.)
- This system will activate when backing up with the ignition switch ON. If the vehicle is moving at a speed over 5 km/h (3 mph), the system may not be activated correctly.
- The sensing distance while the parking distance warning-reverse is in operation is approximately 120 cm (47 in.).
- When more than two objects are sensed at the same time, the closest one will be recognized first.

Types of warning sound	Indicator*
When an object is 120 cm to 61 cm (47 in. to 24 in.) from the rear bumper: Buzzer beeps intermittently.	
When an object is 60 cm to 31 cm (23 in. to 12 in.) from the rear bumper: Buzzer beeps more frequently.	

* : if equipped

Types of warning sound	Indicator*
When an object is within 30 cm (11 in.) of the rear bumper: Buzzer sounds continuously.	

* : if equipped

✻ NOTICE

The indicator may differ from the illustration as objects or sensors status.
If the indicator blinks, have the system checked by a professional workshop. Kia recommends to visit an authorized Kia dealer/service partner.

Non-operational conditions of parking distance warning-reverse

The parking distance warning-reverse may not operate properly when:

1. Moisture is frozen to the sensor. (It will operate normally when the moisture has been cleared.)
2. The sensor is covered with foreign matter, such as snow or water, or the sensor cover is blocked. (It will operate normally when the material is removed or the sensor is no longer blocked.)
3. Driving on uneven road surfaces (unpaved roads, gravel, bumps, gradient).
4. Objects generating excessive noise (vehicle horns, loud motorcycle engines, or truck air brakes) are within range of the sensor.
5. Heavy rain or water spray exists.
6. Wireless transmitters or mobile phones are within range of the sensor.
7. The sensor is covered with snow.
8. Trailer towing

The detecting range may decrease when:

1. The sensor is stained with foreign matter such as snow or water. (The sensing range will return to normal when removed.)
2. Outside air temperature is extremely hot or cold.

The following objects may not be recognized by the sensor:

1. Sharp or slim objects such as ropes, chains or small poles.
2. Objects which tend to absorb the sensor frequency such as clothes, spongy material or snow.
3. Undetectable objects smaller than 1 m (40 in.) in height and narrower than 14 cm (6 in.) in diameter.

parking distance warning-reverse precautions

- The parking distance warning-reverse may not sound consistently depending on the speed and shapes of the objects detected.
- The parking distance warning-reverse may malfunction if the vehicle bumper height or sensor installation has been modified or damaged. Any non-factory installed equipment or accessories may also interfere with the sensor performance.
- The sensor may not recognize objects less than 30 cm (11 in.) from the sensor, or it may sense an incorrect distance. Use caution.

- When the sensor is frozen or stained with snow, dirt, or water, the sensor may be inoperative until the stains are removed using a soft cloth.
- Do not push, scratch or strike the sensor. Sensor damage could occur.

✻ NOTICE

This system can only sense objects within the range and location of the sensors; It can not detect objects in other areas where sensors are not installed. Also, small or slim objects, such as poles or objects located between sensors may not be detected by the sensors.
Always visually check behind the vehicle when backing up.
Be sure to inform any drivers of the vehicle that may be unfamiliar with the system regarding the systems capabilities and limitations.

⚠ WARNING

Pay close attention when the vehicle is driven close to objects on the road, particularly pedestrians, and especially children. Be aware that some objects may not be detected by the sensors, due to the object's distance, size or material, all of which can limit the effectiveness of the sensor. Always perform a visual inspection to make sure the vehicle is clear of all obstructions before moving the vehicle in any direction.

Self-diagnosis

If you don't hear an audible warning sound or if the buzzer sounds intermittently when shifting the gear to the R (Reverse) position, this may indicate a malfunction in the parking distance warning-reverse. If this occurs, have the system checked by a professional workshop. Kia recommends to visit an authorized Kia dealer/service partner.

⚠ WARNING

Your new vehicle warranty does not cover any accidents or damage to the vehicle or injuries to its occupants due to a parking distance warning-reverse malfunction. Always drive safely and cautiously.

PARKING DISTANCE WARNING - FORWARD (IF EQUIPPED)

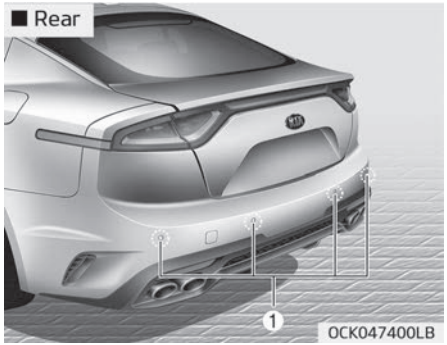

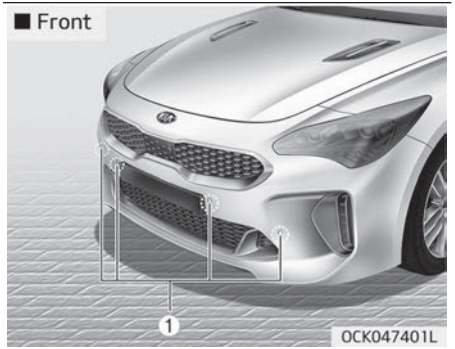

The parking distance warning-forward assists the driver during movement of the vehicle by chiming if any object is sensed within the distance of 100 cm (39 in.) in front and 120 cm (47 in.) behind the vehicle.
This system is a supplemental system and it is not intended to nor does it replace the need for extreme care and attention of the driver.
The sensing range and objects detectable by the sensors (1) are limited. Whenever moving pay as much attention to what is in front and behind of you as you would in a vehicle without a parking distance warning-forward.

⚠ WARNING

The parking distance warning-forward should only be considered as a supplementary function. The driver must check the front and rear view. The operational function of the parking distance warning-forward can be affected by many factors and conditions of the surroundings, so the responsibility rests always with the driver.

Operation of the parking distance warning-forward

Operating condition

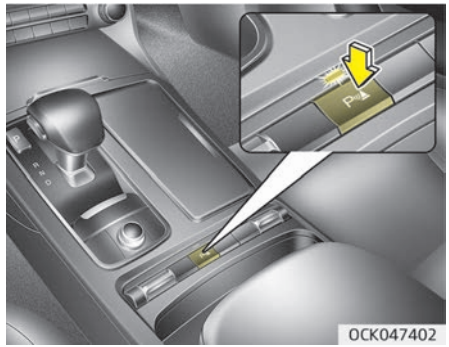

- This system activates when the parking distance warning-forward button is pressed with the ignition switch ON.
- The indicator of the parking distance warning-forward button turns on automatically and activates the parking distance warning-forward when you shift the gear to the R (Reverse) position. It will turn off automatically when you drive above 30km/h (18.6 mph).

- The sensing distance while backing up is approximately 120 cm (47 in.) when you are driving less than 10 km/h (6.2 mph).
- The sensing distance while moving forward is approximately 100 cm (39 in.) when you are driving less than 10 km/h (6.2 mph).
- When more than two objects are sensed at the same time, the closest one will be recognized first.
- The side sensors are activated when you shift the gear to the R (Reverse) position.
- If the vehicle speed is above 20km/h, the system automatically turns off. To activate again, push the button.

✻ NOTICE

It may not operate if it's distance from the object is already less than approximately 25 cm when the system is ON.

Type of warning indicator and sound

■ : with warning sound

Distance from object		Warning indicator		Warning sound
		When driving forward	When driving rearward	
100 cm~61 cm	Front		-	Buzzer beeps intermittently
120 cm~61 cm	Rear	-		Buzzer beeps intermittently
60 cm~31 cm	Front			Buzzer beeps frequently
	Rear	-		Buzzer beeps frequently
30 cm	Front			Buzzer sounds continuously
	Rear	-		Buzzer sounds continuously

✻ NOTICE

- The actual warning sound and indicator may differ from the illustration according to objects or sensor status.
- Do not wash the vehicle's sensor with high pressure water.

⚠ CAUTION

- **This system can only sense objects within the range and location of the sensors;**
  It can not detect objects in other areas where sensors are not installed. Also, small or slim objects, such as poles or objects located between sensors may not be detected by the sensors.
  Always visually check behind the vehicle when backing up.
- **Be sure to inform any drivers of the vehicle that may be unfamiliar with the system regarding the systems capabilities and limitations.**

Non-operational conditions of parking distance warning-forward

parking distance warning-forward may not operate normally when:

1. Moisture is frozen to the sensor. (It will operate normally when moisture melts.)
2. Sensor is covered with foreign matter, such as snow or water, or the sensor cover is blocked. (It will operate normally when the material is removed or the sensor is no longer blocked.)
3. The parking distance warning-forward button is off.

There is a possibility of parking distance warning-forward malfunction when:

1. Driving on uneven road surfaces such as unpaved roads, gravel, bumps, or gradient.
2. Objects generating excessive noise such as vehicle horns, loud motorcycle engines, or truck air brakes can interfere with the sensor.
3. Heavy rain or water spray.
4. Wireless transmitters or mobile phones present near the sensor.
5. Sensor is covered with snow.

Detecting range may decrease when:

1. Outside air temperature is extremely hot or cold.
2. Undetectable objects smaller than 1 m and narrower than 14 cm in diameter.

The following objects may not be recognized by the sensor:

1. Sharp or slim objects such as ropes, chains or small poles.
2. Objects, which tend to absorb sensor frequency such as clothes, spongy material or snow.

✻ NOTICE

1. The warning may not sound sequentially depending on the speed and shapes of the objects detected.
2. The parking distance warning-forward may malfunction if the vehicle bumper height or sensor installation has been modified. Any non-factory installed equipment or accessories may also interfere with the sensor performance.
3. Sensor may not recognize objects less than 30 cm from the sensor, or it may sense an incorrect distance. Use with caution.
4. When the sensor is frozen or stained with snow or water, the sensor may be inoperative until the stains are removed using a soft cloth.

(Continued)

(Continued)

5. Do not push, scratch or strike the sensor with any hard objects that could damage the surface of the sensor. Sensor damage could occur.

✻ NOTICE

This system can only sense objects within the range and location of the sensors, it can not detect objects in other areas where sensors are not installed. Also, small or slim objects, or objects located between sensors may not be detected.
Always visually check in front and behind the vehicle when driving.
Be sure to inform any drivers in the vehicle that may be unfamiliar with the system regarding the systems capabilities and limitations.

⚠ WARNING

Pay close attention when the vehicle is driven close to objects on the road, particularly pedestrians, and especially children. Be aware that some objects may not be detected by the sensors, due to the objects distance, size or material, all of which can limit the effectiveness of the sensor. Always perform a visual inspection to make sure the vehicle is clear of all obstructions before moving the vehicle in any direction.

Self-diagnosis

When you shift the gear to the R (Reverse) position and if one or more of the below occurs you may have a malfunction in the parking distance warning-reverse.

- You don't hear an audible warning sound or if the buzzer sounds intermittently.

- 

is displayed. (if equipped)

(blinks)

If this occurs, have the system checked by a professional workshop. Kia recommends to visit an authorized Kia dealer/service partner.

⚠ WARNING

Your new vehicle warranty does not cover any accidents or damage to the vehicle or injuries to its occupants related to a parking distance warning-forward. Always drive safely and cautiously.

REARVIEW MONITOR (IF EQUIPPED)

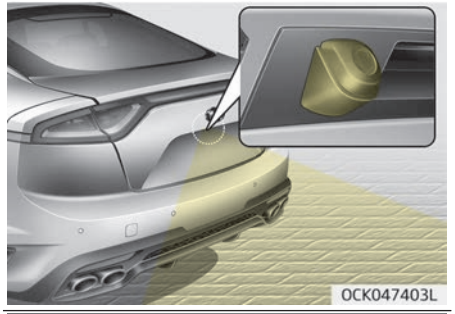
OCK047403L


OCK048406N

The rearview monitor will activate when the back-up light is ON with the ignition switch ON and the shift lever in the R (Reverse) position.

This system is a supplemental system that shows behind the vehicle through AVN (Audio, Video and Navigation) while backing-up.
Also, it displays rear view image when there is driver's request even in N/D gear. It provides image optimized for driving mode unlike parking mode image. All three conditions must be met to operate driving assist mode.
- IGN Status : ON
- Gearshift Status : D or N
- Rear view camera switch : ON

⚠ WARNING

- **This system is a supplementary function only. It is the responsibility of the driver to always check the inside/outside rearview mirror and the area behind the vehicle before and while backing up because there is a dead zone that can't be seen by the camera.**
- **Always keep the camera lens clean. If lens is covered with foreign matter, the camera may not operate normally.**

❋ If your vehicle is equipped with AVN (Audio, Video and Navigation) system, rearview display will show behind the vehicle through the AVN monitor while backing-up. Refer to a separately supplied manual for detailed information.

SURROUND VIEW MONITORING SYSTEM (IF EQUIPPED)

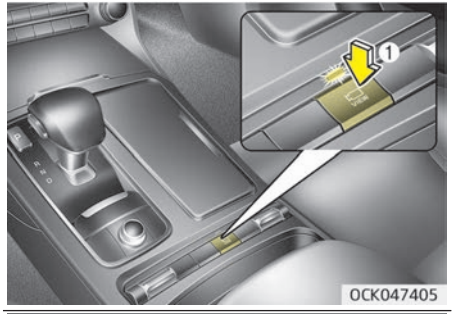



This is the parking support system to show around circumstance when you park the vehicle in monitor. When you push the button in [ON] position, it is operated. To cancel the system, push again.

Operating conditions
– When ignition is ON

– When the transaxle is on D, N or R

- When the vehicle moves backwards, regardless of On/Off of button and vehicle speed, the SVM is operated.
- When the trunk (tailgate) and driver/passenger door are opened and the outside mirror is folded, the warning is illuminated in SVM system.
- If the SVM* system does not operate normally, contact a professional workshop. Kia recommends to visit an authorized Kia dealer/service partner.

*Surround View Monitoring

Rear view monitor (if equipped)

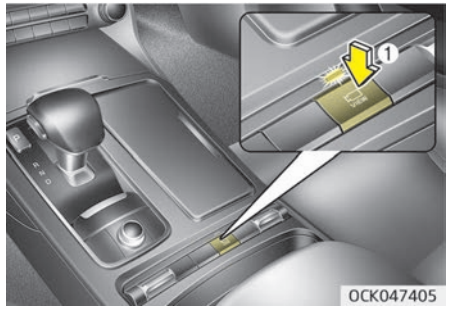





You may check the rear view through the screen while driving.
The system is activated when:

- The engine is ON
- The vehicle's speed is over 15 km/h and you press the SVM button (1)
- The vehicle's speed is under 15 km/h and you press the (2) button on the screen

The system is deactivated when:

- You press the SVM button (1) again
- You press the (2) button on the screen again
- You press the audio or AVN system button (3)

✻ NOTICE

- If vehicle speed is over 15 km/h (9 mph)
  - the rear image stays ON when the rear view was on the screen
  - screen (top, front wide, front right and front left) of other modes of SVM system turns OFF and switches to the original AVN screen when other modes were on the screen
- If the SVM system is ON and the vehicle speed is under 15 km/h (9 mph)
  - the rear image stays ON when the rear view was on the screen
  - a pop-up for selecting the SVM mode (top, front wide, front right and front left) appears when pressing (2) button on the screen
- When the vehicle is backing up, the rear image will be appear on the screen automatically regardless of the vehicle speed or SVM button (1) status.

(Continued)

(Continued)

  - If the rear image was ON, the screen switches to the parking assist screen.
  - If the screen (top, front wide, front right and front left) of other modes of SVM system was ON, the screen for setting the initial rear view mode appears.
  - When the shift lever is moved from R (Reverse) to D (Drive), the screen of the previous mode is displayed.
- A warning appears on the SVM system when
  - the trunk is opened
  - the driver/passenger's door is opened
  - the outside rearview mirror is folded

⚠ WARNING

- **The Rear View Monitor system is a supplementary driving assist system. Make sure to check the rear view directly for safety. What you see on the screen may differ from the actual vehicle's location.**
- **The camera may not operate properly if any foreign substance is on the rear camera lens. Always keep the lens clean.**
- **When the rear view is displayed while driving, an icon is indicated on the upper right side of the screen.**

Battery saver function

- The purpose of this feature is to prevent the battery from being discharged. The system automatically turns off the parking lights when the driver removes the ignition key and opens the driver-side door.
- With this feature, the parking lights will turn off automatically if the driver parks on the side of the road at night.
  If necessary, to keep the lights on when the ignition key is removed, perform the following:
  1. Open the driver-side door.
  2. Turn the parking lights OFF and ON again using the light switch on the steering column.

⚠ CAUTION

If the driver gets out of the vehicle through other doors (except driver's door), the battery saver function does not operate. Therefore, it causes the battery to be discharged. In this case, make sure to turn off the lamp before getting out of the vehicle.

Headlight escort function (if equipped)

If you turn the ignition switch to the ACC or OFF position with the headlights ON, the headlights remain on for about 5 minutes. However, if the driver's door is opened and closed, the headlights are turned off after 15 seconds.
The headlights can be turned off by pressing the lock button on the transmitter (or smart key) twice or turning the light switch to the OFF position.

Daytime running lights (if equipped)

The Daytime Running Lights (DRL) can make it easier for others to see the front of your vehicle during the day. DRL can be helpful in many different driving conditions, and it is especially helpful after dawn and before sunset.
The DRL system turns OFF when:

1. The headlight switch is ON.
2. The engine is OFF.
3. Engaging the Parking Brake.

✻ ■ Traffic Change (For Europe)

The low beam light distribution is asymmetric. If you go abroad to a country with opposite traffic direction, this asymmetric part will dazzle oncoming car driver. To prevent dazzle, ECE regulation demand several technical solutions (ex. automatic change system, adhesive sheet, down aiming). This headlamps are designed to adjust in user setting mode in cluster Refer to the USM in chapter 4. (only for Dynamic Bending Light (DBL) equipped vehicle)

Lighting control



The light switch has a Headlight and a Parking light position.
To operate the lights, turn the knob at the end of the control lever to one of the following positions:

1. OFF position
2. Auto light / DBL position
3. Parking light position
4. Headlight position

Parking light position



When the light switch is in the parking light position (3rd position), the tail, license and instrument panel lights will turn ON.

Headlight position

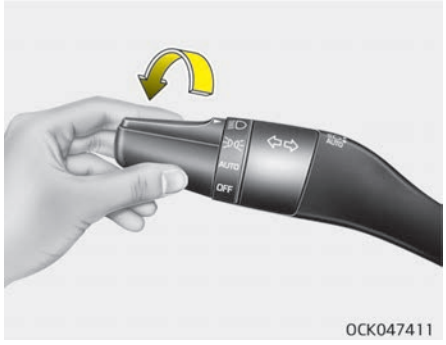

When the light switch is in the headlight position (4th position), the head, tail, license and instrument panel lights will turn ON.

✻ NOTICE

The ignition switch must be in the ON position to turn on the headlights.

Auto light/DBL position (if equipped)

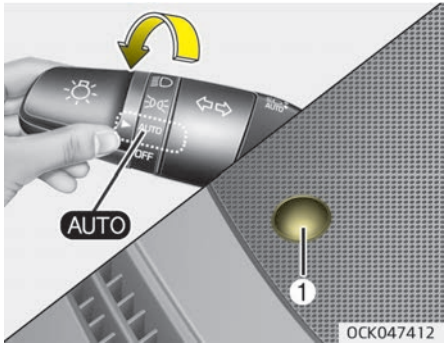

When the light switch is in the AUTO light position, the taillights and headlights will be turned ON or OFF automatically depending on the amount of light outside the vehicle.
If your vehicle is equipped with the dynamic Bending Light (DBL), it will also operate when the headlamp is ON.

⚠ CAUTION

- **Never place anything over the sensor (1) located on the instrument panel. This will ensure better auto-light system control.**
- **Don't clean the sensor using a window cleaner. The cleaner may leave a light film which could interfere with sensor operation.**
- **If your vehicle has window tint or other types of metallic coating on the front windshield, the Auto light system may not work properly.**

High beam operation



To turn on the high beam headlamp, push the lever away from you when the headlight is on. The lever will return to its original position.
The high beam indicator will light when the headlight high beams are switched on.
To prevent the battery from being discharged, do not leave the lights on for a prolonged time while the engine is not running.

⚠ WARNING

Do not use high beam when there are other vehicles. Using high beam could obstruct the other driver's vision.



To flash the headlights, pull the lever towards you. It will return to the normal (low beam) position when released. The headlight switch does not need to be on to use this flashing feature.

High beam assist (if equipped)

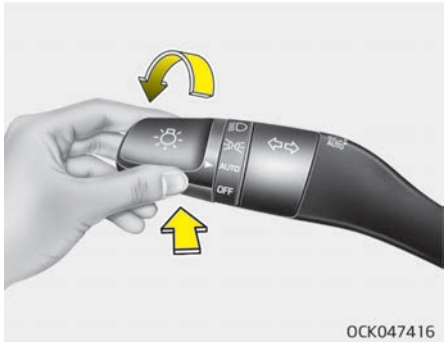

The High Beam Assist is a system that automatically adjusts the headlamp range (switches between high beam and low beam) according to the brightness of other vehicles and road conditions.

Operation condition

1. Place the light switch in the AUTO position.
2. Turn on the high beam by pushing the lever away from you.
   The High Beam Assist (AUTO) indicator will illuminate.
3. The High Beam Assist will turn on when vehicle speed is above 45 km/h (28 mph).
   - If the lever is pushed away when the High Beam Assist is operating, the High Beam Assist will turn off and the high beam will be on continuously. The High Beam Assist (AUTO) indicator will turn off.
   - If the lever is pulled towards you when the high beam is on with operating High Beam Assist, the High Beam Assist will turn off.
4. If the light switch is placed to the headlamp position, the High Beam Assist will turn off and the low beam will be on continuously.

The high beam switches to low beam in the below conditions.

- When the High Beam Assist is off.
- When the light switch is not in the AUTO position.
- When the headlamp is detected from the on-coming vehicle.
- When the tail lamp is detected from the front vehicle.
- When the surrounding is bright enough high beams are not needed.
- When streetlights or other lights are detected.
- When vehicle speed is below 35 km/h (22 mph).
- When headlamp / taillamp of bicycle/ motorcycle is detected.

⚠ CAUTION

The system may not operate normally in the below conditions.

- **When the light from the on-coming or front vehicle is not detected because of lamp damage, hidden from sight, etc.**
- **When the lamp of the on-coming or front vehicle is covered with dust, snow or water.**
- **When the light from the on-coming or front vehicle is not detected because of exhaust fume, smoke, fog, snow, etc.**
- **When the front window is covered with foreign matters such as ice, dust, fog, or is damaged.**
- **When there is a similar shape lamp with the front vehicle's lamps.**

(Continued)

(Continued)

- When it is hard to see because of fog, heavy rain or snow.
- When the headlamp is not repaired or replaced at an authorized dealer.
- When headlamp aiming is not properly adjusted.
- When driving on a narrow curved road or rough road.
- When driving downhill or uphill.
- When only part of the vehicle in front is visible on a crossroad or curved road.
- When there is a traffic light, reflecting sign, flashing sign or mirror.
- When the road conditions are bad such as being wet or covered with snow.
- When the front vehicle's headlamps are off but the fog lamps on.
- When a vehicle suddenly appears from a curve.

(Continued)

(Continued)

- When the vehicle is tilted from a flat tire or being towed.
- When the LKA (lane keeping assist) system warning light illuminates. (if equipped)

⚠ WARNING

- Do not place any accessories, stickers or tint the windshield.
- Have the windshield glass replaced from an authorized dealer.
- Do not remove or impact related parts of the High Beam Assist system.
- Be careful that water doesn't get into the High Beam Assist unit.
- Do not place objects on the dashboard that reflects light such as mirrors, white paper, etc. The system may malfunction if sunlight is reflected.

(Continued)

(Continued)

- At times, the Smart High Beam system may not work properly, always check the road conditions for your safety. When the system does not operate normally, manually change between the high beam and low beam.

Turn signals and lane change signals

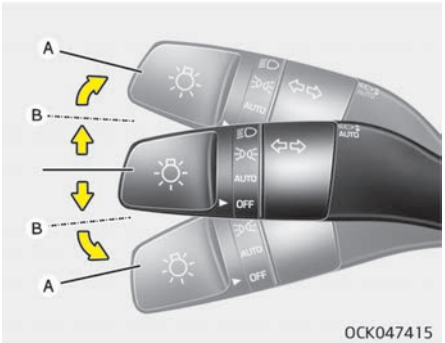

The ignition switch must be on for the turn signals to function. To turn on the turn signals, move the lever up or down (A). The green arrow indicators on the instrument panel indicate which turn signal is operating. They will self-cancel after a turn is completed. If the indicator continues to flash after a turn, manually return the lever to the OFF position.
To signal a lane change, move the turn signal lever slightly and hold it in position (B). The lever will return to the OFF position when released.

If an indicator stays on and does not flash or if it flashes abnormally, one of the turn signal bulbs may be burned out and will require replacement.

One-touch lane change function (if equipped)

To activate an one-touch lane change function, move the turn signal lever slightly for less than 0.7 second and then release it. The lane change signals will blink 3 times.

✻ NOTICE

If an indicator flash is abnormally quick or slow, a bulb may be burned out or have a poor electrical connection in the circuit.

Rear fog light (if equipped)



To turn the rear fog lights on, turn the headlight switch to the headlight on position and turn the rear fog light switch (1) to the on position.
To turn the rear fog lights off, turn the rear fog light switch to the on position again or turn the headlight switch off.

✻ NOTICE

To turn on the rear fog light switch, the ignition switch must be in the ON position.

Headlight leveling device (if equipped)

Manual type

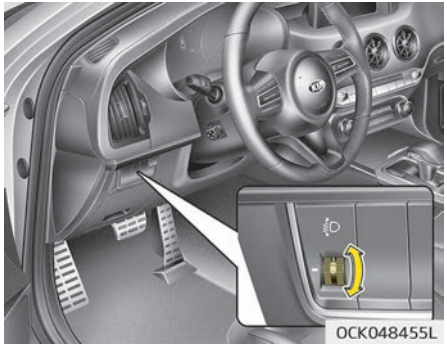

To adjust the headlight beam level according to the number of passengers and loading weight in the luggage area, turn the beam leveling switch.
The higher the number of the switch position, the lower the headlight beam level. Always keep the headlight beam at the proper leveling position, or headlights may dazzle other road users.

Listed below are the examples of proper switch settings. For loading conditions other than those listed below, adjust the switch position so that the beam level may be the nearest as the condition obtained according to the list.

Loading condition	Switch position
Driver only	0
Driver + Front passenger	0
Full passengers (including driver)	1
Full passengers (including driver) + Maximum permissible loading	2
Driver + Maximum permissible loading	3

Automatic type

It automatically adjusts the headlight beam level according to the number of the passengers and the loading weight in the luggage area.
And it offers the proper headlight beam under the various conditions.

⚠ WARNING

If it is not work properly even though your car is inclined backward according to passenger's posture, or the headlight beam is irradiated to the high or low position, have the system inspected by a professional workshop. Kia recommends to visit an authorized Kia dealer/service partner.
Do not attempt to inspect or replace the wiring yourself.

Dynamic Bending Light (DBL) (if equipped)

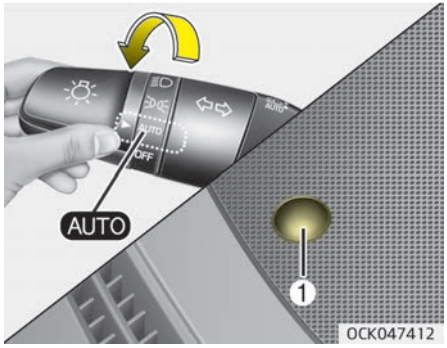

Dynamic Bending Light (DBL) uses the steering angle and vehicle speed, to keep your field of vision wide by swiveling and leveling the headlamp.
Change the switch to the AUTO position when the engine is running. The dynamic Bending Light (DBL) will operate when the headlamp is ON. To turn off the DBL, change the switch to other positions. After turning the DBL off, headlamp swiveling no longer occurs, but leveling operates continuously.

If the DBL malfunction indicator comes on, the DBL is not working properly. Drive to the nearest safe location and restart the engine. If the indicator continuously remains on, have the system checked by a professional workshop. Kia recommends to visit an authorized Kia dealer/service partner.

WIPERS AND WASHERS

Windshield wiper/washer

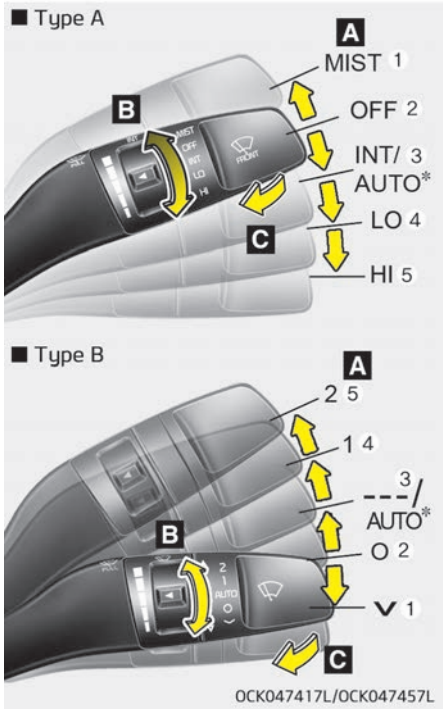

A: Wiper speed control (front)

(1)	MIST/	Single wipe
(2)	OFF/O	Off
(3)	INT/---	Intermittent wipe
	AUTO *	Auto control wipe
(4)	LO/1	Low wiper speed
(5)	HI/2	High wiper speed

* : if equipped

B: Intermittent control wipe time adjustment

C: Wash with brief wipes (front) *

Windshield wipers

Operates as follows when the ignition switch is turned ON.

1. MIST/: For a single wiping cycle, move the lever to this (MIST/) position and release it. The wipers will operate continuously if the lever is held in this position.
2. OFF/O: Wiper is not in operation
3. INT/ ---: Wiper operates intermittently at the same wiping intervals. Use this mode in light rain or mist. To vary the speed setting, turn the speed control knob.
4. LO/1: Normal wiper speed
5. HI/2: Fast wiper speed

*: if equipped

✻ NOTICE

If there is heavy accumulation of snow or ice on the windshield, defrost the windshield for about 10 minutes, or until the snow and/or ice is removed before using the windshield wipers to ensure proper operation. If you do not remove the snow and/or ice before using the wiper and washer, it may damage the wiper and washer system.

Auto control (if equipped)

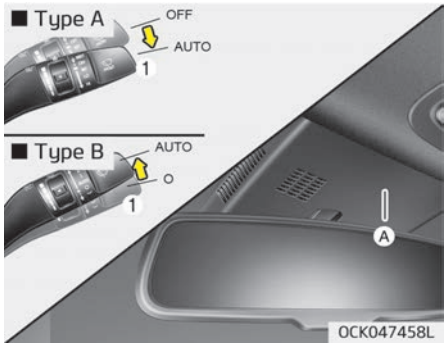

The rain sensor (A) located on the upper end of the windshield glass senses the amount of rainfall and controls the wiping cycle for the proper interval. The more it rains, the faster the wiper operates. When the rain stops, the wiper stops.
To vary the speed setting, turn the speed control knob (1).
If the wiper switch is set in AUTO mode when the ignition switch is ON, the wiper will operate once to perform a self-check of the system. Set the wiper to OFF (O) position when the wiper is not in use.

⚠ CAUTION

When the ignition switch is ON and the windshield wiper switch is placed in the AUTO mode, use caution in the following situations to avoid any injury to the hands or other parts of the body:

- **Do not touch the upper end of the windshield glass facing the rain sensor.**
- **Do not wipe the upper end of the windshield glass with a damp or wet cloth.**
- **Do not put pressure on the windshield glass.**

⚠ CAUTION

- **When washing the vehicle, set the wiper switch in the OFF (O) position to stop the auto wiper operation.**
  The wiper may operate and be damaged if the switch is set in the AUTO mode while washing the vehicle.

(Continued)

(Continued)

- **Do not remove the sensor cover located on the upper end of the passenger side windshield glass. Damage to system parts could occur and may not be covered by your vehicle warranty.**
- **When starting the vehicle in winter, set the wiper switch in the OFF (O) position. Otherwise, wipers may operate and ice may damage the windshield wiper blades. Always remove all snow and ice and defrost the windshield properly prior to operating the windshield wipers.**
- **When tinting the windshield, be careful of any fluid getting into the sensor located in the top center of the front windshield. It may damage the related parts.**

Windshield washers

■ Type A



■ Type B



In the OFF (O) position, pull the lever gently toward you to spray washer fluid on the windshield and to run the wipers 1-3 cycles.
Use this function when the windshield is dirty.
The spray and wiper operation will continue until you release the lever.
If the washer does not work, check the washer fluid level. If the fluid level is not sufficient, you will need to add appropriate non-abrasive windshield washer fluid to the washer reservoir.

The reservoir filler neck is located in the front of the engine compartment on the passenger side.

⚠ CAUTION

To prevent possible damage to the washer pump, do not operate the washer when the fluid reservoir is empty.

⚠ WARNING

Do not use the washer in freezing temperatures without first warming the windshield with the defrosters; the washer solution could freeze on the windshield and obscure your vision.

⚠ CAUTION

- **To prevent possible damage to the wipers or windshield, do not operate the wipers when the windshield is dry.**

(Continued)

(Continued)

- **To prevent damage to the wiper blades, do not use gasoline, kerosene, paint thinner, or other solvents on or near them.**
- **To prevent damage to the wiper arms and other components, do not attempt to move the wipers manually.**
- **To prevent possible damage to the wipers and washer system, use anti-freezing washer fluids in the winter season or cold weather.**

INTERIOR LIGHT

⚠ CAUTION

Do not use the interior lights for extended periods when the engine is not running.
It may cause battery discharge.

⚠ WARNING

Do not use the interior lights when driving in the dark.
Accidents could happen because the view may be obscured by interior lights.

Automatic turn off function (if equipped)

The interior lights automatically turn off approximately 20 minutes after the ignition switch is turned off.
If your vehicle is equipped with the theft alarm system, the interior lights automatically turns off approximately 5 seconds after the system is armed stage.

Map lamp

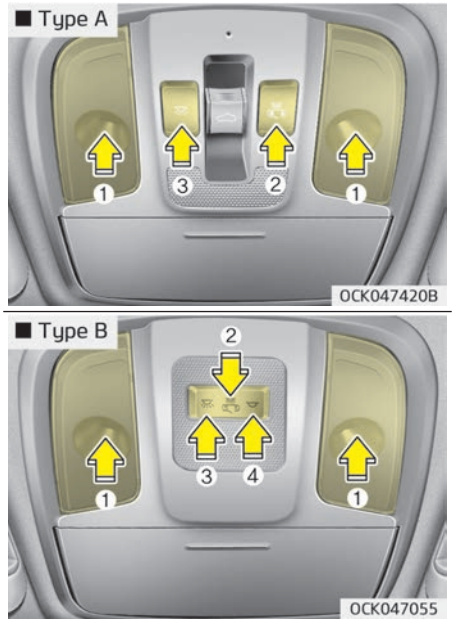

- (1) : Press the lamps to turn the front map lamps on and off.
- (2):
  - The map lamp and room lamp comes on when a door is opened. The lamps go out after approximately 30 seconds.
  - The map lamp and room lamp comes on for approximately 30 seconds when doors are unlocked with a transmitter or smart key as long as the doors are not opened.
  - The map lamp and room lamp will stay on for approximately 20 minutes if a door is opened with the ignition switch in the ACC or LOCK/OFF position.
  - The map lamp and room lamp will stay on continuously if the door is opened with the ignition switch in the ON position.
  - The map lamp and room lamp will go out immediately if the ignition switch is changed to the ON position or all doors are locked.
  - To turn off the DOOR mode, press the DOOR button (2) once again (not pressed).

✻ NOTICE

The DOOR mode and ROOM mode can not be selected at a time.

Front Room Lamp:

- Type A

  (3): Press this switch to turn the front and rear room lamps on and off.

- Type B

  (3): Press this switch to turn the front and rear room lamps on.

  (4): Press this switch to turn the front and rear room lamps off.

Room lamp

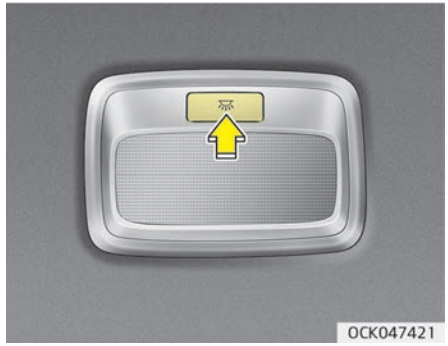

: The light stays on at all times.

Tailgate room lamp (if equipped)

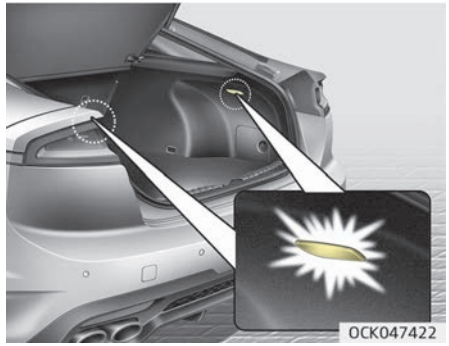

The tailgate room lamp comes on when the tailgate is opened.

⚠ CAUTION

The tailgate room lamp comes on as long as the tailgate lid opens. To prevent unnecessary charging system drain, close the tailgate lid securely after using the tailgate room.

Glove box lamp

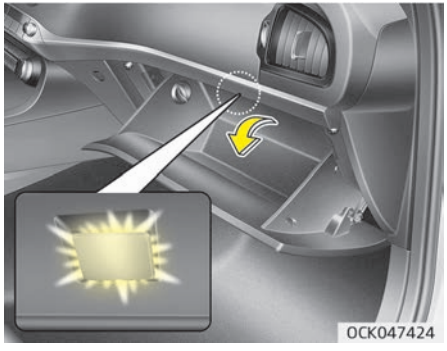

The glove box lamp comes on when the glove box is opened.

⚠ CAUTION

To prevent unnecessary charging system drain, close the glove box securely after using the glove box.

Vanity mirror lamp (if equipped)

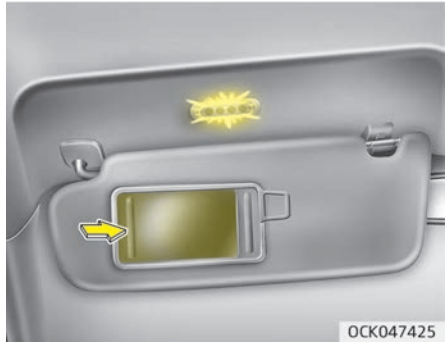

Opening the lid of the vanity mirror will automatically turn on the mirror light.

⚠ CAUTION

■ Vanity mirror lamp

Always have the switch in the off position when the vanity mirror lamp is not in use. If the sunvisor is closed without the lamp off, it may discharge the battery or damage the sunvisor.

Door courtesy lamp

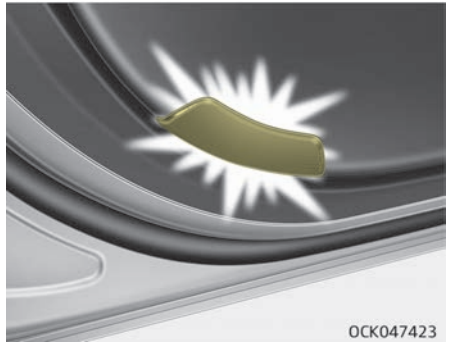

The door courtesy lamp comes ON when the door is opened to assist entering or exiting the vehicle. It also serves as a warning to passing vehicles that the vehicle door is open.

WELCOME SYSTEM (IF EQUIPPED)

Welcome light (if equipped)



When all the doors (and trunk (tailgate)) are locked and closed, the room lamp will come on for about 15 seconds if any of the below is performed.

- With the smart key system
  - When the vehicle is approached with the smart key in possession.

Escort welcome (if equipped)

When the headlight(light switch in the headlight or AUTO position) is on and all doors (and trunk (tailgate)) are locked and closed, the position light and headlight will come on for 15 seconds if any of the below is performed.

- With the smart key system
  - When the door unlock button is pressed on the smart key.

At this time, if you press the door lock or unlock button, the position light and headlight will turn off immediately.

Interior light

When the interior light switch is in the DOOR position and all doors (and trunk (tailgate)) are locked and closed, the room lamp will come on for 30 seconds if any of the below is performed.

- With the smart key system
  - When the door unlock button is pressed on the smart key.
  - When the button of the outside door handle is pressed.

At this time, if you press the door lock or unlock button, the room lamp will turn off immediately.

DEFROSTER

⚠ CAUTION

To prevent damage to the conductors bonded to the inside surface of the rear window, never use sharp instruments or window cleaners containing abrasives to clean the window.

✻ NOTICE

If you want to defrost and defog the front windshield, refer to "Windshield defrosting and defogging" on page 4-131.

Rear window defroster

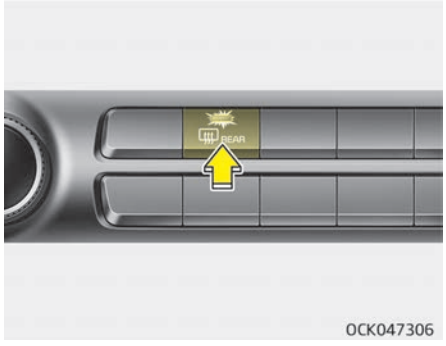

The defroster heats the window to remove frost, fog and thin ice from the rear window, while the engine is running.
To activate the rear window defroster, press the rear window defroster button located in the center facia switch panel. The indicator on the rear window defroster button illuminates when the defroster is ON.
If there is heavy accumulation of snow on the rear window, brush it off before operating the rear defroster.

The rear window defroster automatically turns off after approximately 20 minutes or when the ignition switch is turned off. To turn off the defroster, press the rear window defroster button again.

Outside rearview mirror defroster (if equipped)

If your vehicle is equipped with the outside rearview mirror defrosters, they will operate at the same time you turn on the rear window defroster.

CLIMATE CONTROL SYSTEM

System operation

Ventilation

1. Set the mode to the position.
2. Set the air intake control to the outside (fresh) air position.
3. Set the temperature control to the desired position.
4. Set the fan speed control to the desired speed.

Heating

1. Set the mode to the position.
2. Set the air intake control to the outside (fresh) air position.
3. Set the temperature control to the desired position.
4. Set the fan speed control to the desired speed.
5. If dehumidified heating is desired, turn the air conditioning system (if equipped) on.

Operation tips

- To keep dust or unpleasant fumes from entering the vehicle through the ventilation system, temporarily set the air intake control to the recirculated air position. Be sure to return the control to the fresh air position when the irritation has passed to keep fresh air in the vehicle. This will help keep the driver alert and comfortable.
- Air for the heating/cooling system is drawn in through the grilles just ahead of the windshield. Care should be taken that these are not blocked by leaves, snow, ice or other obstructions.
- To prevent interior fog on the windshield, set the air intake control to the fresh air position and fan speed to the desired position, turn on the air conditioning system, and adjust the temperature control to desired temperature.
- If the windshield fogs up, set the mode to the or position.

⚠ CAUTION

Operating the blower when the ignition switch is in the ON position could cause the battery to discharge. Operate the blower when the engine is running.

Air conditioning

Kia Air Conditioning Systems are filled with R-134a or R-1234yf refrigerant.

1. Start the engine. Push the air conditioning button.
2. Set the mode to the position.
3. Set the air intake control to the outside air or recirculated air position.
4. Adjust the fan speed control and temperature control to maintain maximum comfort.

Your vehicle is filled with R-134a or R-1234yf according to the regulation in your country at the time of production. You can find out which air conditioning refrigerant is applied to your vehicle on the label located inside of the hood. Refer to "Refrigerant label" on page 8-23 for the location of the air conditioning refrigerant label.

⚠ CAUTION

- **The refrigerant system should only be serviced by trained and certified technicians to insure proper and safe operation.**
- **The refrigerant system should be serviced in a well-ventilated place.**
- **The air conditioning evaporator (cooling coil) shall never be repaired or replaced with one removed from a used or salvaged vehicle and new replacement MAC evaporators shall be certified (and labeled) as meeting SAE Standard J2842.**

✻ NOTICE

- When using the air conditioning system, monitor the temperature gauge closely while driving up hills or in heavy traffic when outside temperatures are high. Air conditioning system operation may cause engine overheating. Continue to use the blower fan but turn the air conditioning system off if the temperature gauge indicates engine overheating.
- When opening the windows in humid weather air conditioning may create water droplets inside the vehicle. Since excessive water droplets may cause damage to electrical equipment, air conditioning should only be used with the windows closed.

Air conditioning system operation tips

- If the vehicle has been parked in direct sunlight during hot weather, open the windows for a short time to let the hot air inside the vehicle escape.
- Use air conditioning to reduce humidity and moisture inside the vehicle on rainy or humid days.
- During air conditioning system operation, you may occasionally notice a slight change in engine speed as the air conditioning compressor cycles. This is a normal system operation characteristic.
- Use the air conditioning system every month only for a few minutes to ensure maximum system performance.
- When using the air conditioning system, you may notice clear water dripping (or even puddling) on the ground under the passenger side of the vehicle. This is a normal system operation characteristic.
- Operating the air conditioning system in the recirculated air position provides maximum cooling, however, continual operation in this mode may cause the air inside the vehicle to become stale.
- During cooling operation, you may occasionally notice a misty air flow because of rapid cooling and humid air intake. This is a normal system operation characteristic.

Climate control air filter

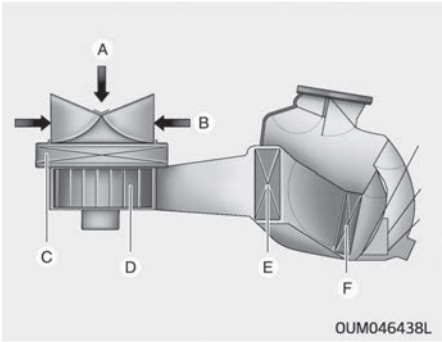

A: Outside air

B: Recirculated air

C: Climate control air filter

D: Blower

E: Evaporator core

F: Heater core

The climate control air filter installed behind the glove box filters the dust or other pollutants that come into the vehicle from the outside through the heating and air conditioning system.
If dust or other pollutants accumulate in the filter over a period of time, the air flow from the air vents may decrease, resulting in moisture accumulation on the inside of the windshield even when the outside (fresh) air position is selected. If this happens, have the climate control air filter replaced by a professional workshop. Kia recommends to visit an authorized Kia dealer/service partner.

✻ NOTICE

- Replace the filter according to the Maintenance Schedule.
  If the car is being driven in severe conditions such as dusty, rough roads, more frequent climate control air filter inspections and changes are required.

(Continued)

(Continued)

- When the air flow rate suddenly decreases, have the system checked by a professional workshop. Kia recommends to visit an authorized Kia dealer/service partner.

Air conditioning refrigerant label

■ Example
Type A



Type B



❈ The actual Air Conditioning refrigerant label in the vehicle may differ from the illustration.

Each symbols and specification on air conditioning refrigerant label means as below;

1. Classification of refrigerant
2. Amount of refrigerant
3. Classification of compressor lubricant

You can find out which air conditioning refrigerant is applied your vehicle at the label inside of the engine room. Refer to "Refrigerant label" on page 8-23 for a more detailed location of the air conditioning refrigerant label.

Checking the amount of air conditioner refrigerant and compressor lubricant

When the amount of refrigerant is low, the performance of the air conditioning is reduced. Overfilling also has a bad influence on the air conditioning system.
Therefore, if abnormal operation is found, have the system inspected by a professional workshop.
Kia recommends to visit an authorized Kia dealer/service partner.

⚠ WARNING

■ Vehicles equipped with R-134a



Because the refrigerant is at very high pressure, the air conditioning system should only be serviced by trained and certified technicians.

It is important that the correct type and amount of oil and refrigerant is used.
Otherwise, it may cause damage to the vehicle and personal injury.

⚠ WARNING

■ Vehicles equipped with R-1234yf
(Continued)

(Continued)



Because the refrigerant is mildly inflammable and at very high pressure, the air conditioning system should only be serviced by trained and certified technicians.

It is important that the correct type and amount of oil and refrigerant is used.
Otherwise, it may cause damage to the vehicle and personal injury.

Automatic climate control system (if equipped)

■ Front seat



■ Rear seat



OCK047300/OCK047322

System Overview

1. Driver's temperature control knob
2. AUTO (automatic control) button
3. Front windshield defroster button
4. Rear window defroster button
5. Air conditioning button
6. Air intake control button
7. OFF button
8. Fan speed control button
9. Mode selection button
10. Passenger's temperature control knob
11. SYNC temperature control selection button
12. Climate control display
13. Rear temperature control knob

Automatic heating and air conditioning



1. Press the AUTO button. The modes, fan speeds, air intake and air-conditioning will be controlled automatically according to the temperature setting.

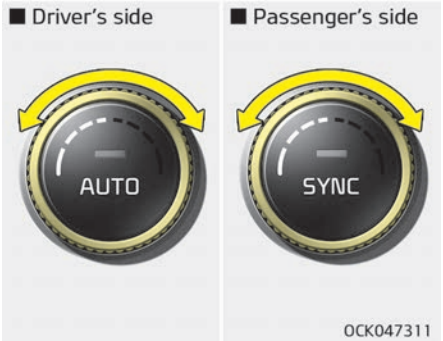

2. Turn the temperature control knob to the desired temperature.

✻ NOTICE

- To turn the automatic operation off, select any button or switch of the following:
  - Mode selection button
  - Air conditioning button

(Continued)

(Continued)

  - Front windshield defroster button
    (Press the button one more time to deselect the front windshield defroster function. The 'AUTO' sign will illuminate on the information display once again.)
  - Air intake control button
  - Fan speed control button

  The selected function will be controlled manually while other functions operate automatically.
- For your convenience and to improve the effectiveness of the climate control, use the AUTO button and set the temperature to 22 °C/71 °F (for Europe) or 23 °C/73 °F (for Except Europe).

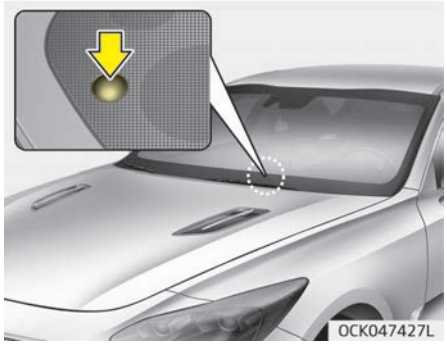

✻ NOTICE

Never place anything over the sensor located on the instrument panel to ensure better control of the heating and cooling system.

Mode selection

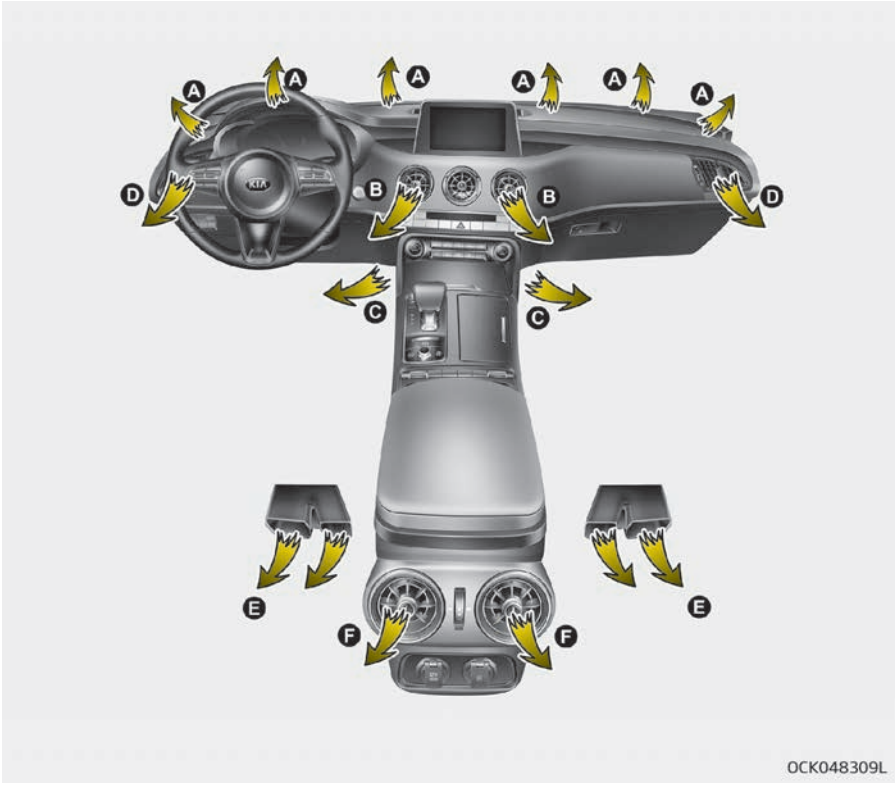

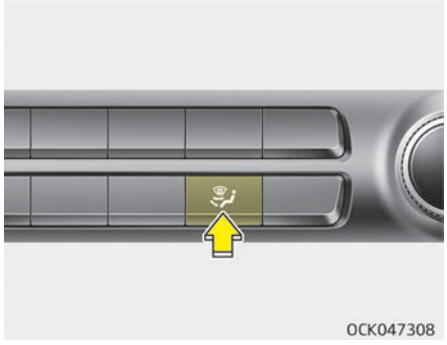

The mode selection button controls the direction of the air flow through the ventilation system.
The air flow outlet port is converted as follows:

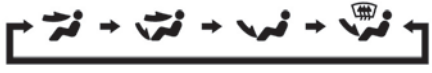

Face-Level

Air flow is directed toward the upper body and face. Additionally, each outlet can be controlled to direct the air discharged from the outlet.

Bi-Level

Air flow is directed towards the face and the floor.

Floor-Level

Most of the air flow is directed to the floor, with a small amount of the air being directed to the windshield and side window defrosters.

Floor/Defrost-Level

Most of the air flow is directed to the floor and the windshield with a small amount directed to the side window defrosters.

✻ NOTICE

■ 2nd row outlet vents (E, F)

- The air flow of the 2nd row outlet vents is controlled by the front climate control system and delivered through the inside air duct of the floor (E, F).
- The air flow of the 2nd row outlet vents (E, F) may be weaker than the instrument panel vents for the long air duct.

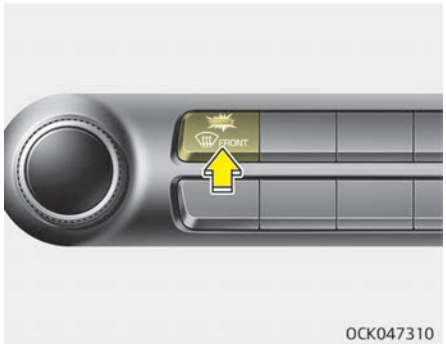

Defrost-Level

Most of the air flow is directed to the windshield with a small amount of air directed to the side window defrosters.

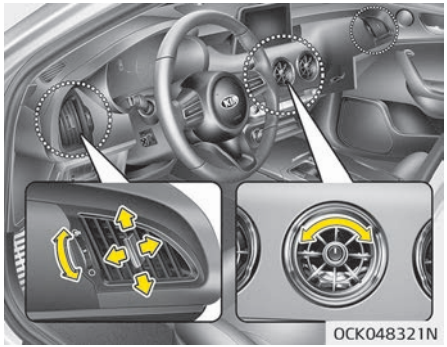

Instrument panel vents

The outlet vents can be opened or closed separately using the thumbwheel.
Also, you can adjust the direction of air delivery from these vents using the vent control lever as shown.

Temperature control

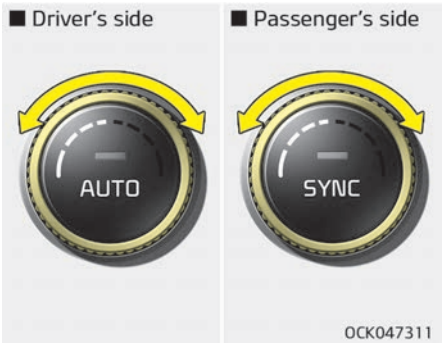

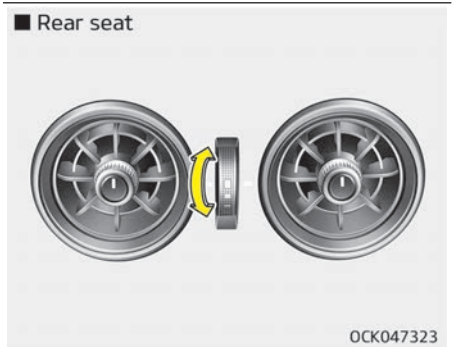

- Front seat
  The temperature will increase to the maximum (HI) by turning the knob to the extreme right.
  The temperature will decrease to the minimum (Lo) by turning the knob to the extreme left.
  When turning the knob, the temperature will increase or decrease by 0.5 °C/1 °F. When set to the lowest temperature setting, the air conditioning will operate continuously.
- Rear seat
  Turn the rear seat temperature control knob to adjust temperature.
  The front and rear seat side temperature is adjusted individually.



Adjusting the driver and passenger side temperature equally

- Press the "SYNC" button to adjust the driver and passenger side temperature equally.
  The passenger side temperature will be set to the same temperature as the driver side temperature.
- Turn the driver side temperature control knob. The driver and passenger side temperature will be adjusted equally.

Adjusting the driver and passenger side temperature individually

- Press the "SYNC" button again to adjust the driver and passenger side temperature individually. The illumination of button turns off.
- Operate the driver side temperature control knob to adjust the driver side temperature.
- Operate the passenger side temperature control knob to adjust the passenger side temperature.

Temperature conversion (°C ↔ °F) (if equipped)

You can switch the temperature mode between Centigrade to Fahrenheit as follows;

While pressing the OFF button, depress the AUTO button for 3 seconds or more. The display will change from Centigrade to Fahrenheit, or from Fahrenheit to Centigrade.

Air intake control

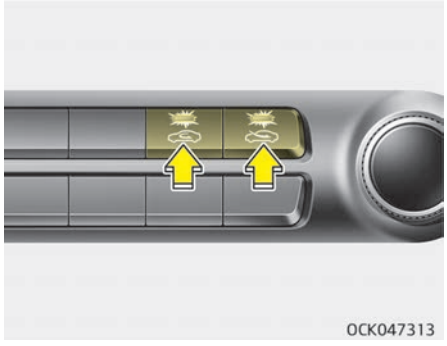

This is used to select the outside (fresh) air position or recirculated air position.
To change the air intake control position, push the control button.

Recirculated air position



With the recirculated air position selected, air from the passenger compartment will be drawn through the heating system and heated or cooled according to the function selected.

Outside (fresh) air position



With the outside (fresh) air position selected, air enters the vehicle from outside and is heated or cooled according to the function selected.

✻ NOTICE

Prolonged operation of the heater in the recirculated air position (without air conditioning selected) may cause fogging of the windshield and side windows and the air within the passenger compartment may become stale.

(Continued)

(Continued)

In addition, prolonged use of the air conditioning with the recirculated air position selected will result in excessively dry air in the passenger compartment.

⚠ WARNING

- **Continue using the climate control system in the recirculated air position may allow humidity to increase inside the vehicle which may fog the glass and obscure visibility.**
- **Do not sleep in a vehicle with the air conditioning or heating system on. It may cause serious harm or death due to a drop in the oxygen level and/or body temperature.**
- **Continue using the climate control system in the recirculated air position can cause drowsiness or sleepiness, and loss of vehicle control. Set the air intake control to the outside (fresh) air position as much as possible while driving.**

Fan speed control

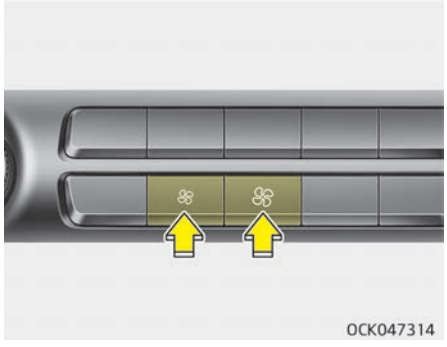

The fan speed can be set to the desired speed by pushing the fan speed control button.
The higher the fan speed is, the more air is delivered.
Pressing the OFF button turns off the fan.

Air conditioning

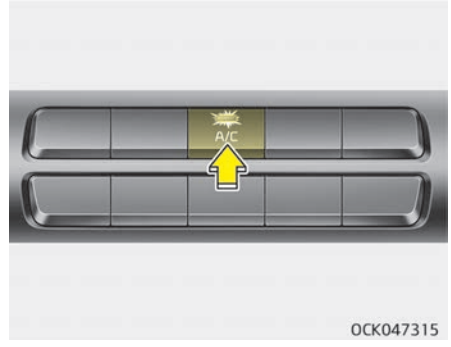

Press the A/C button to turn the air conditioning system on (indicator light will illuminate).
Press the button again to turn the air conditioning system off.

OFF mode

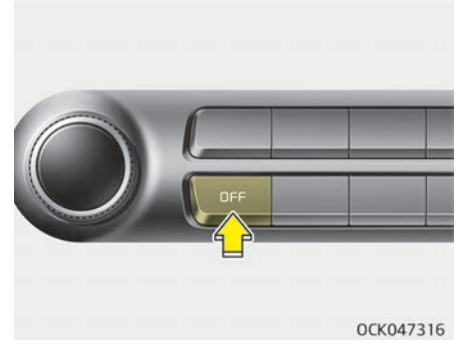

Press the front blower OFF button to turn off the front air climate control system. However, you can still operate the mode and air intake buttons as long as the ignition switch is in the ON position.

Climate information screen selection (if equipped)

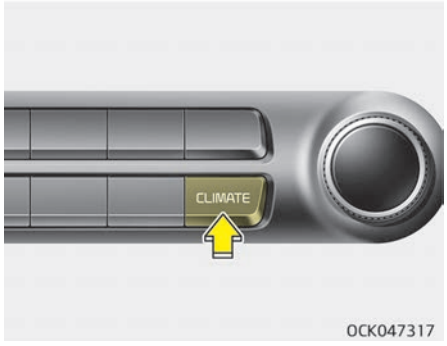

Press the climate information screen selection button to display climate information on the screen.

WINDSHIELD DEFROSTING AND DEFOGGING

Automatic climate control system

To defog inside windshield

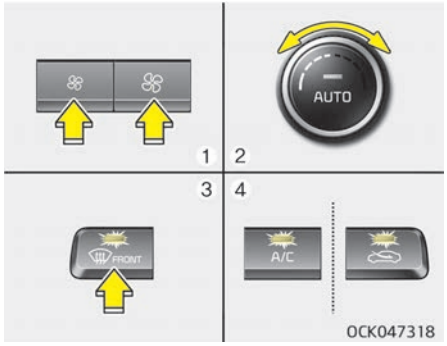

1. Set the fan speed to the desired position.
2. Select desired temperature.
3. Press the defroster button ().
4. The air conditioning will turn on according to the detected ambient temperature and outside (fresh) air position will be selected automatically.

If the air conditioning and outside (fresh) air position are not selected automatically, adjust the corresponding button manually. If the position is selected, lower fan speed is adjusted to a higher fan speed.

To defrost outside windshield

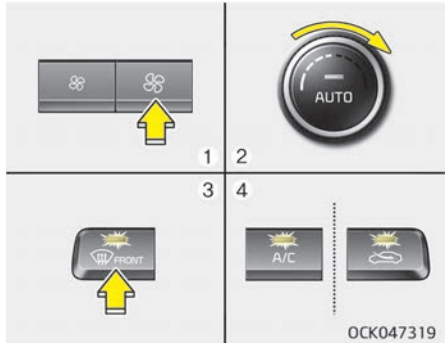

1. Set the fan speed to the highest position.
2. Set the temperature to the extreme hot (HI) position.
3. Press the defroster button ().
4. The air conditioning will turn on according to the detected ambient temperature and outside (fresh) air position will be selected automatically.

Operation tips

- For maximum defrosting, set the temperature control to the extreme right/hot position and the fan speed control to the highest speed.
- If warm air to the floor is desired while defrosting or defogging, set the mode to the floor-defrost position.
- Before driving, clear all snow and ice from the windshield, rear window, outside rear view mirrors, and all side windows.
- Clear all snow and ice from the hood and air inlet in the cowl grill to improve heater and defroster efficiency and to reduce the probability of fogging up the inside of the windshield.

⚠ WARNING

■ Windshield heating
(Continued)

(Continued)

Do not use the or position during cooling operation in extremely humid weather. The difference between the temperature of the outside air and the windshield could cause the outer surface of the windshield to fog up, causing loss of visibility. In this case, set the mode selection to the position and fan speed control to the lower speed.

Defogging logic (if equipped)

To reduce the possibility of fogging up the inside of the windshield, the air intake or air conditioning are controlled automatically according to certain conditions such as or position. To cancel or return to the defogging logic, do the following.

Automatic climate control system

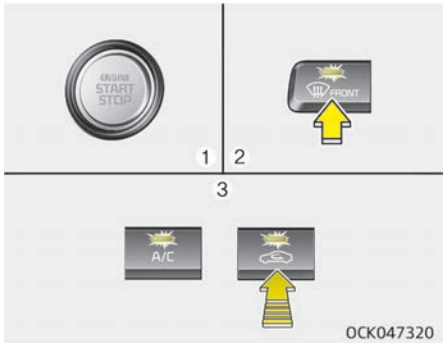

1. Turn the ignition switch to the ON position.
2. Press the defroster button ().
3. While pressing the air conditioning button (A/C), press the air intake control button at least 5 times within 3 seconds.

The indicator on the air intake control button will blink 3 times. It indicates that the defogging logic is canceled or returned to the programmed status.
If the battery has been discharged or disconnected, it resets to the defog logic status.

Auto defogging system (if equipped)



Auto defogging reduces the possibility of fogging up the inside of the windshield by automatically sensing the moisture of inside the windshield.

AUTO

This indicator illuminates when the auto defogging system senses the moisture of inside the windshield and operates.

If more moisture is in the vehicle, higher steps operate as follow.

(For European region)

Step 1: Blowing air flow toward the windshield
Step 2: Increasing air flow toward the windshield
Step 3: Operating the air conditioning.
Step 4: Outside air position

(For except European region)

Step 1: Outside air position
Step 2: Operating the air conditioning.
Step 3: Blowing air flow toward the windshield
Step 4: Increasing air flow toward the windshield

To cancel or reset the Auto Defogging System

Press the front windshield defroster button for 3 seconds when the ignition switch is in the ON position.
When the ADS system is canceled, the indicator on the button will blink 3 times per 0.5 sec and the position "ADS OFF" will be displayed on the climate control information screen.
When the ADS system is reset, the indicator on the button will blink 6 times per 0.25 sec and the position "ADS OFF" will be disappeared on the climate control information screen.
You can set or release the Auto Defogging System on the AVN Climate Information selection screen.
If the battery is discharged or detached, the auto defogging system will be reset. Adjust the feature accordingly.

⚠ CAUTION

- **Pressing one of Air intake recirculation, A/C OFF, Wind Direction Mode selection Buttons will deactivate the Auto Defogging System. To secure a driver's vision, never push air recirculation, A/C OFF, Wind Direction Buttons while the Auto Defogging System is running.**
- **Do not forcibly remove the sensor cover on the top of windshield glass on the driver's side in the car. Removing the cover can damage the sensor.**

Automatic ventilation (if equipped)

The system automatically selects the outside (fresh) air position when the climate control system operates over a certain period of time (approximately 30 minutes) in low temperature with the recirculated air position selected.

To cancel or reset the Automatic Ventilation

When the air conditioning system is on, select Face Level mode and while pressing the A/C button, press the recirculated air position button five times within three seconds.
When the automatic ventilation is canceled, the indicator blinks 3 times. When the automatic ventilation is activated, the indicator blinks 6 times.

Smart ventilation (if equipped)

The smart ventilation system maintains pleasant/fresh air condition inside the passenger compartment by automatically detecting/controlling the temperature, humidity, and CO2 level, when you drive the vehicle with the climate control system in the OFF position. When the smart ventilation system starts to operate, the message, "SMART VENTILATION ON" appears for 5 seconds.

- The smart ventilation system stops operating, when the OFF button of the climate control system is selected.
- The smart ventilation system stops operating, when any button of the climate control system is selected for operation.
- The smart ventilation system may not operate, when the vehicle is driven at low speed.

Remote start (if equipped, for Middle East)

The climate system will start automatically when the engine is restarted by remote control. However, if the climate system turned off before you stopped the engine, the climate system does not operate when you start the engine remotely. For detailed information refer to "Smart key function" on page 4-06.

✻ NOTICE

After remotely starting the engine, the engine will turn off automatically after 10 minutes if you do not ride your vehicle.

STORAGE COMPARTMENT

These compartments can be used to store small items.

⚠ CAUTION

- **To avoid possible theft, do not leave valuables in the storage compartment.**
- **Always keep the storage compartment covers closed while driving. Do not attempt to place so many items in the storage compartment that the storage compartment cover cannot close securely.**

⚠ WARNING

■ Flammable materials

Do not store cigarette lighters, propane cylinders, or other flammable/explosive materials in the vehicle. These items may catch fire and/or explode if the vehicle is exposed to hot temperatures for extended periods.

Center console storage

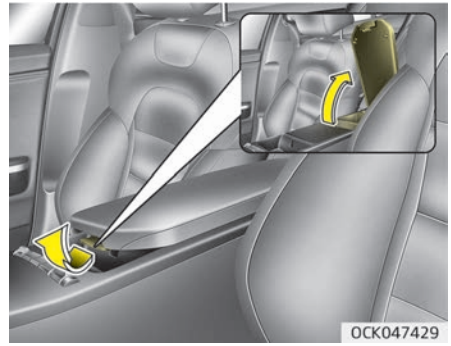

To open the center console storage, pull up the lever.

Glove box

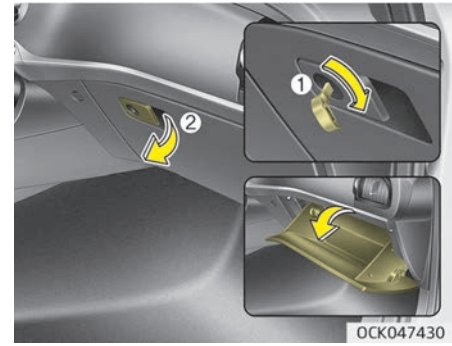

The glove box can be locked and unlocked with a master key (1). (if equipped)
To open the glove box, pull the lever (2) and the glove box will automatically open. Close the glove box after use.

⚠ WARNING

To reduce the risk of injury in an accident or sudden stop, always keep the glove box door closed while driving.

⚠ CAUTION

Do not keep food in the glove box for a long time.

Sunglass holder

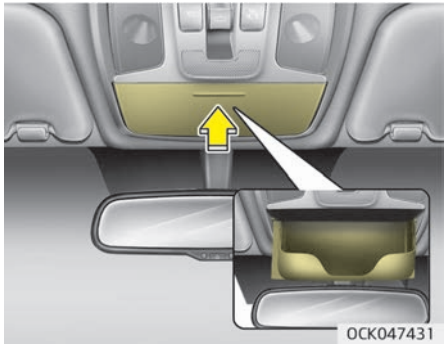

To open the sunglass holder, press the cover and the holder will slowly open. Place your sunglasses with the lenses facing out. To close the sunglass holder, push it up.

⚠ WARNING

- **Do not keep objects except sunglasses inside the sunglass holder. Such objects can be thrown from the holder in the event of a sudden stop or an accident, possibly injuring the passengers in the vehicle.**
- **Do not open the sunglass holder while the vehicle is moving. The rear view mirror of the vehicle can be blocked by an opened sunglass holder.**
- **Do not put the glasses forcibly into a sunglass holder to prevent breakage or deformation of the glasses. It may cause personal injury if you try to open it forcibly when the glasses are jammed in the holder.**

Cigarette lighter (if equipped)

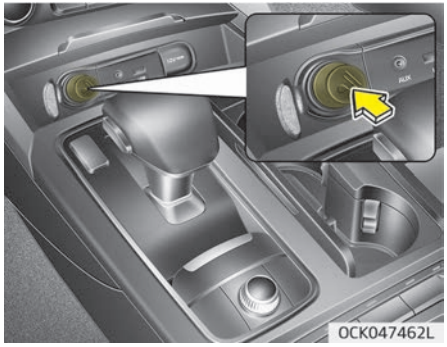

For the cigarette lighter to work, the ignition switch must be in the ACC position or the ON position.
To use the cigarette lighter, push it all the way into its socket. When the element has heated, the lighter will pop out to the "ready" position.
Kia recommends to use parts for replacement from an authorized Kia dealer/service partner.

⚠ WARNING

- **Do not hold the lighter in after it is already heated because it will overheat.**
- **If the lighter does not pop out within 30 seconds, remove it to prevent overheating.**
- **Do not insert foreign objects into the socket of the cigarette lighter. It may damage the cigarette lighter.**

⚠ CAUTION

The use of plug-in accessories (shavers, hand-held vacuums, and coffee pots, etc.) may damage the socket or cause electrical failure.

Ashtray (if equipped)

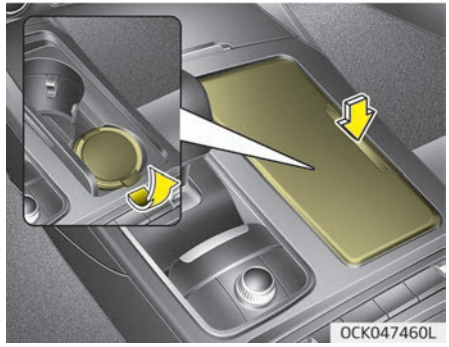

To use the ashtray, open the cover.
To clean or empty the ashtray, pull it out.

⚠ WARNING

■ Ashtray use

- **Do not use the vehicle's ashtrays as waste receptacles.**
- **Putting lit cigarettes or matches in an ashtray with other combustible materials may cause a fire.**

Cup holder

⚠ WARNING

■ Hot liquids

- **Do not place uncovered cups of hot liquid in the cup holder while the vehicle is in motion. If the hot liquid spills, you may burn yourself. Such a burn to the driver could lead to loss of control of the vehicle.**
- **To reduce the risk of a personal injury in the event of a sudden stop or collision, do not place uncovered or unsecured bottles, glasses, cans, etc., in the cup holder while the vehicle is in motion.**

(Continued)

(Continued)

- **If uncovered cups and cans containing any form of liquid are put into the front/center seat cup holders and the vehicle brakes heavily, the liquid may flow into the narrow openings around cup holders and console, and soak into the vehicle's internal electrical system.**
  To avoid subsequent system malfunction, always firmly cover any container holding liquid.

⚠ WARNING

Keep cans or bottles out of direct sun light and do not put them in a vehicle that is heated up. It may explode.

✻ NOTICE

- Keep your drinks sealed while driving to prevent spilling your drink. If liquid spills, it may get into the vehicle's electrical/electronic system and damage electrical/electronic parts.
- When cleaning spilled liquids, do not dry the cup holder at high temperature. This may damage the cup holder.

■ Type A

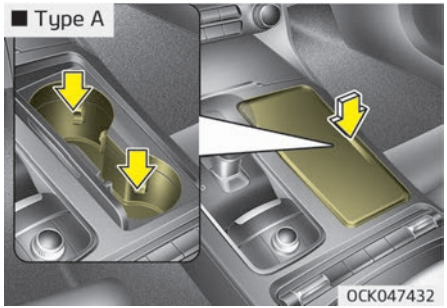

OCK047432

■ Type B

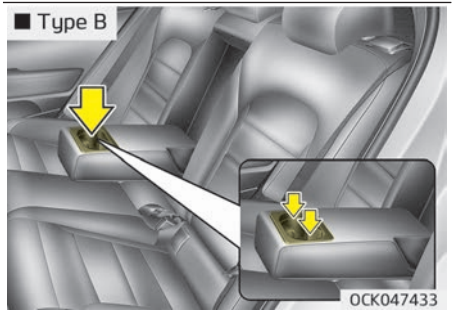

OCK047433

Cups or small beverage cans may be placed in the cup holders.

Sunvisor

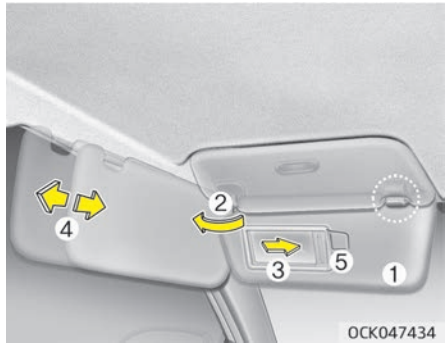

OCK047434

Use the sunvisor to shield direct light through the front or side windows.
To use the sunvisor, pull it downward.
To use the sunvisor for the side window, pull it downward, unsnap it from the bracket (1) and swing it to the side (2).
To use the vanity mirror, pull down the visor and slide the mirror cover (3).
Adjust the sunvisor extension forward or backward (4).
The ticket holder (5) is provided for holding a tollgate ticket. (if equipped)

⚠ CAUTION

■ Vanity mirror lamp (if equipped)

If you use the vanity mirror lamp, turn off the lamp before returning the sunvisor to its original position, otherwise it could result in battery discharge and possible sunvisor damage.

Seat warmer (if equipped)

■ Front seat

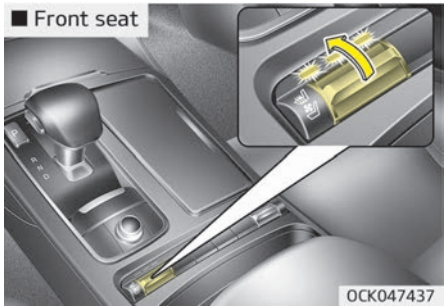

■ Rear seat

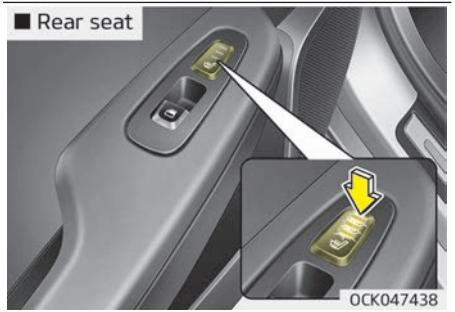

The seat warmer is provided to warm the front seats during cold weather. With the ignition switch in the ON position, turn up either of the switches to warm the driver's seat or the front passenger's seat.

During mild weather or under conditions where the operation of the seat warmer is not needed, keep the switches in the "OFF" position.

- Each time you turn up the switch, the temperature setting of the seat will change as follows:

■ Front seat

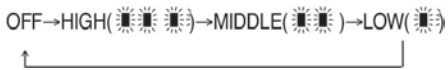

■ Rear seat

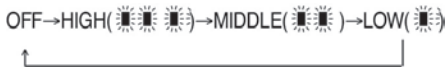

- The seat warmer defaults to the OFF position whenever the ignition switch is turned on.

▶ Temperature control (Automatic)

The seat warmer starts to automatically control the seat temperature in order to prevent low-temperature burns after being manually turned ON.

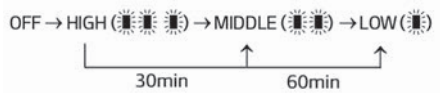

You may manually turn up the button to increase the seat temperature. However, it soon returns to the automatic mode again.

- When turning up the switch for more than 1.5 seconds with the seat warmer operating, the seat warmer will turn OFF.
- The seat warmer defaults to the OFF position whenever the Engine Start/Stop button is in the ON position.

✻ NOTICE

With the seat warmer switch in the ON position, the heating system in the seat turns off or on automatically depending on the seat temperature.

⚠ CAUTION

- **When cleaning the seats, do not use an organic solvent such as paint thinner, benzene, alcohol and gasoline. Doing so may damage the surface of the heater or seats.**
- **To prevent overheating the seat warmer, do not place anything on the seats that insulates against heat, such as blankets, cushions or seat covers while the seat warmer is in operation.**
- **Do not place heavy or sharp objects on seats equipped with seat warmers. Damage to the seat warming components could occur.**
- **Do not change the seat cover. It may damage the seat warmer or airventilation system.**

⚠ WARNING

■ Seat warmer burns

Passengers should use extreme caution when using seat warmers due to the possibility of excess heating

(Continued)

(Continued)

or burns. The seat warmer may cause burns even at low temperatures, especially if used for long periods of time. In particular, the driver must exercise extreme care for the following types of passengers:

1. **Infants, children, elderly or handicapped persons, or hospital outpatients**
2. **Persons with sensitive skin or those that burn easily**
3. **Fatigued individuals**
4. **Intoxicated individuals**
5. **Individuals taking medication that can cause drowsiness or sleepiness (sleeping pills, cold tablets, etc.)**

Air ventilation seat (if equipped)

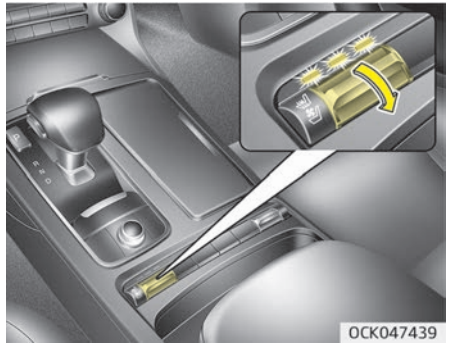

The temperature setting of the seat changes according to the switch position.

- If you want to warm your seat cushion, turn up the switch (red color).
- If you want to ventilate your seat cushion, turn down the switch (blue color).
- Each time you turn down the button, the airflow will change as follows:

OFF→HIGH( )→MIDDLE( )→LOW( )

- The seat warmer (with air ventilation) defaults to the OFF position whenever the ignition switch is turned on.

⚠ CAUTION

When cleaning the seats, do not use an organic solvent such as paint thinner, benzene, alcohol and gasoline. Doing so may damage the surface of the heater or seats.

Power outlet (if equipped)

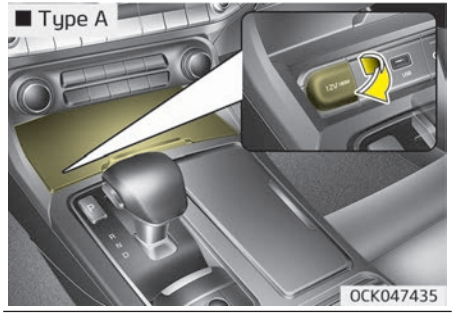

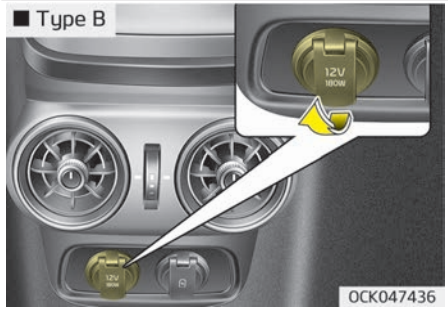

The power outlet is designed to provide power for mobile telephones or other devices designed to operate with vehicle electrical systems. The devices should draw less than 20 amps with the engine running.

⚠ CAUTION

- **Use the power outlet only when the engine is running and remove the accessory plug after use. Using the accessory plug for prolonged periods of time with the engine off could cause the battery to discharge.**
- **Only use 12V electric accessories which are less than 20A in electric capacity.**
- **Adjust the air-conditioner or heater to the lowest operating level when using the power outlet.**
- **Close the cover when not in use.**
- **Some electronic devices can cause electronic interference when plugged into a vehicle's power outlet. These devices may cause excessive audio static and malfunctions in other electronic systems or devices used in your vehicle.**
- **Refrain from using the heater or A/C if you need to use the multipurpose socket. If the heater or A/C has to be used simultaneously, have it to the lowest setting.**

(Continued)

(Continued)

- **Some add-on electrical equipment will induce electromagnetic interference. This will lead to subsequent malfunction or hinder good reception of the Audio/Video and electrical system.**
- **Always make sure that electric add-ons are fully plugged into the multipurpose sockets. Insecure contacts may lead to electrical malfunctions.**

⚠ WARNING

Do not put a finger or a foreign element (pin, etc.) into a power outlet and do not touch with a wet hand. You may get an electric shock.

USB charger (if equipped)

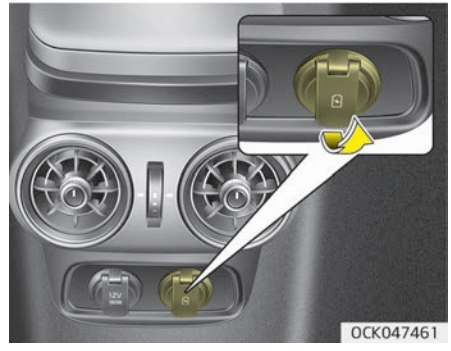

The USB charger is designed to recharge batteries of small size electrical devices using a USB cable. The electrical devices can be recharged when the Engine Start/Stop button is in ACC/ON/START position.
The battery charging state may be monitored on the electrical device.
Disconnect the USB cable from the USB port after use.

- Use the USB charger when the engine is running to prevent battery discharge.
- Only devices that fits the USB port can be used.
- The USB charger can be used only for battery charging purposes.
- Battery chargers cannot be charged.

Wireless smart phone charging system (if equipped)

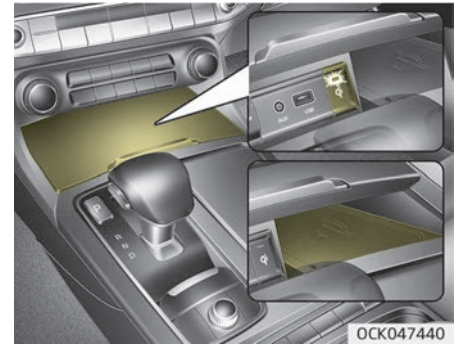

A wireless smart phone charging system located in front of the center console.
Firmly close all doors, and turn the ignition to ACC or IGN ON. To start wireless charging, place the smart phone equipped with wireless charging function on the wireless charging pad.

For best wireless charging results, place the smart phone on the center of the charging pad.
The wireless charging system is designed for one smart phone equipped with QI per single usage only. Please refer to the smart phone accessory cover or the smart phone manufacturer homepage to check whether your smart phone supports QI function.

⚠ WARNING

If any metallic object such as coins is located between the wireless charging system and the smart phone, the charging may be disrupted. Also, the metallic object may heat up.

Wireless smart phone charging

1. Remove any object on the smart phone charging pad including the smart key. If there is any foreign object on the pad other than a smart phone, the wireless charging function may not operate properly.
2. Place the smart phone on the center of the wireless charging pad.
3. The indicator light will change to orange once the wireless charging begins. After the charging is complete, the orange light will change to green.
4. You can choose to turn the wireless charging function to either ON or OFF by selecting the USM on the instrument cluster. (Please refer to "Instrument cluster" on page 4-52 for details).

If the wireless charging is not functioning properly, the orange light will blink and flash for ten seconds then turn off. In such cases, remove the smart phone from the pad and replace it on the pad again, or double check the charging status.
If you leave the smart phone on the charging pad when the vehicle ignition is in OFF, the vehicle will alert you through warning messages and sound (applicable for vehicles with voice guidance function).

⚠ CAUTION

- **Securely close the tray cover when using the wireless smart phone charge function.**
- **Close the tray cover when the smart phone is placed in it at all times. If the vehicle is in motion without the tray cover closed, it is more likely that the driver may use the smart phone. The use of smart phones while driving may lead to possible injuries and accidents.**
- **If it is not possible to close the tray cover due to the size of the smart phone, do not use the wireless smart phone charging function at all.**
- **When the tray cover is broken, do not use the wireless charging function before the tray cover is repaired.**

(Continued)

(Continued)

- When the interior temperature of the wireless charging system rises above a set temperature, the wireless charging will cease to function. After the interior temperature drops below the threshold, the wireless charging function will resume.
- The wireless charging may not function properly when there is a heavy accessory cover on the smart phone.
  The wireless charging will stop when the smart phone is not in complete contact with the wireless charging pad.
- The smart key detection feature in operation could temporarily stop charging.
  (When turning on ignition, opening doors, or closing doors)
- The wireless charging will stop when the vehicle is turned OFF.

(Continued)

(Continued)

- Items equipped with magnetic components such as credit card, telephone card, bankbook, any transportation ticket and such may become damaged during wireless charging.
- Place the smart phone on the center of the charge pad for best results. The smart phone may not charge when placed near the rim of the charging pad. When the smart phone does get charged, it may heat up excessively.
- For smart phones without built-in wireless charging system, an appropriate accessory has to be equipped.
- Cellphones without the certification for wireless charging ⫯ could fail to charge.
- The self-protection feature equipped in some mobile phones could slow down or stop charging.

(Continued)

(Continued)

- The indicator light of some manufacturers' smart phones may still be yellow after the smart phone is fully charged. This is due to the particular characteristic of the smart phone and not a malfunction of the wireless charging.
- When any smart phone without a wireless charging function or a metallic object is placed on the charging pad, a small noise may sound. This small sound is due to the vehicle discerning compatibility of the object placed on the charging pad. It does not affect your vehicle or the smart phone in any way.

Coat hook (if equipped)

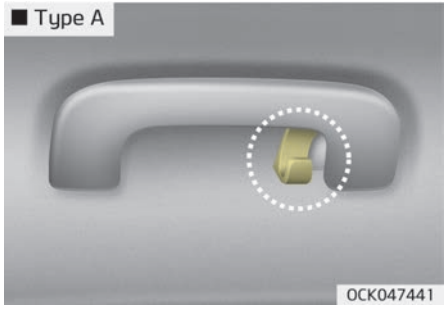

❊ This actual feature may differ from the illustration.

To use the coat hook, pull down the upper portion of coat hook.

⚠ CAUTION

Do not hang heavy clothes, since those may damage the hook.

⚠ WARNING

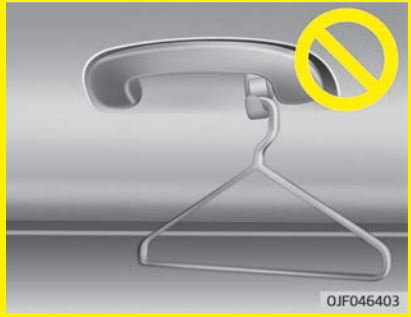

Do not hang other objects such as hangers or hard objects except clothes. Also, do not put heavy, sharp or breakable objects in the clothe pockets. In an accident or when the curtain air bag is inflated, it may cause vehicle damage or personal injury.

Floor mat anchor(s) (if equipped)

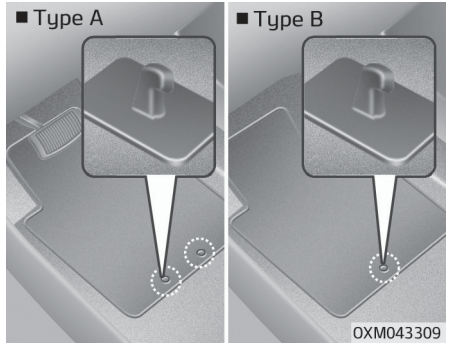

When using a floor mat on the front floor carpet, make sure it attaches to the floor mat anchor(s) in your vehicle. This keeps the floor mat from sliding forward.

⚠ WARNING

The following must be observed when installing ANY floor mat to the vehicle.

(Continued)

(Continued)

- **Ensure that the floor mats are securely attached to the vehicle's floor mat anchor(s) before driving the vehicle.**
- **Do not use ANY floor mat that cannot be firmly attached to the vehicle's floor mat anchors.**
- **Do not stack floor mats on top of one another (e.g. all-weather rubber mat on top of a carpeted floor mat). Only a single floor mat should be installed in each position.**

IMPORTANT - Your vehicle was manufactured with driver's side floor mat anchors that are designed to securely hold the floor mat in place. To avoid any interference with pedal operation, Kia recommends that the Kia floor mat designed for use in your vehicle be installed.

Luggage net (holder) (if equipped)


OCK047443

To keep items from shifting in the cargo area, you can use the four holders located in the cargo area to attach the luggage net.
If necessary, Kia recommends to contact an authorized Kia dealer/service partner to obtain a luggage net.

✻ NOTICE

Vehicles equipped with a luggage rail system may use the shackles to hook the luggage net.

⚠ CAUTION

To prevent damage to the goods or the vehicle, care should be taken when carrying fragile or bulky objects in the luggage compartment.

⚠ WARNING

To avoid eye injury, DO NOT overstretch the luggage net. ALWAYS keep your face and body out of the luggage net's recoil path. DO NOT use the luggage net when the strap has visible signs of wear or damage.

AUDIO SYSTEM

✻ NOTICE

If you install an after market HID head lamp, your vehicle's audio and electronic device may malfunction.

✻ If your vehicle is equipped with AVN (Audio, Video and Navigation) system, refer to a separately supplied manual for detailed information.

Antenna

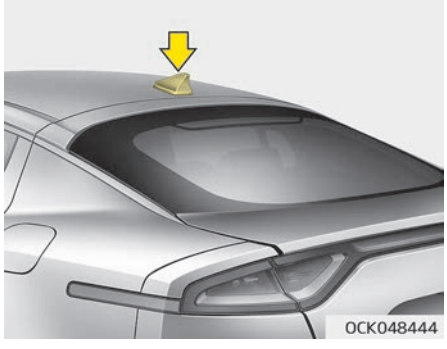

Shark fin antenna

The shark fin antenna will receive both AM and FM signals and the transmit data.

AUX, USB port

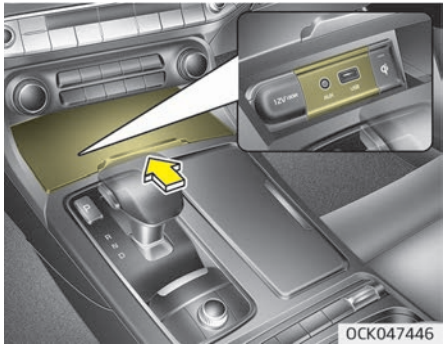

You can use an AUX port to connect audio devices and an USB port to plug in an USB or iPod®.

✻ NOTICE

When using a portable audio device connected to the power outlet, noise may occur during playback. If this happens, use the power source of the portable audio device.

✻ iPod® is a trademark of Apple Inc.

How vehicle radio works

FM reception

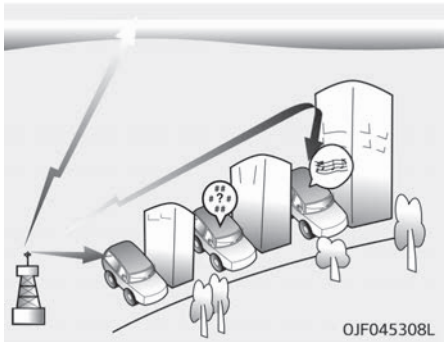

AM and FM radio signals are broadcast from transmitter towers located around your city. They are intercepted by the radio antenna on your vehicle. This signal is then received by the radio and sent to your vehicle speakers.
When a strong radio signal has reached your vehicle, the precise engineering of your audio system ensures the best possible quality reproduction. However, in some cases the signal coming to your vehicle may not be strong and clear.

This can be due to factors, such as the distance from the radio station, closeness of other strong radio stations or the presence of buildings, bridges or other large obstructions in the area.

AM (MW, LW) reception

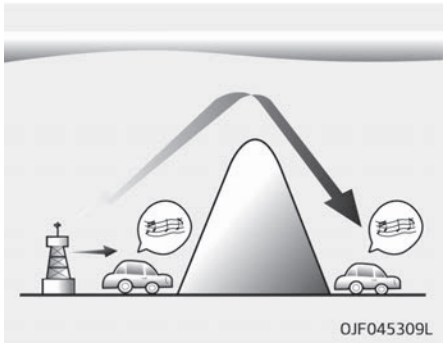

AM broadcasts can be received at greater distances than FM broadcasts. This is because AM radio waves are transmitted at low frequencies. These long, low frequency radio waves can follow the curvature of the earth rather than travelling straight out into the atmosphere. In addition, they curve around obstructions so that they can provide better signal coverage.

FM radio station

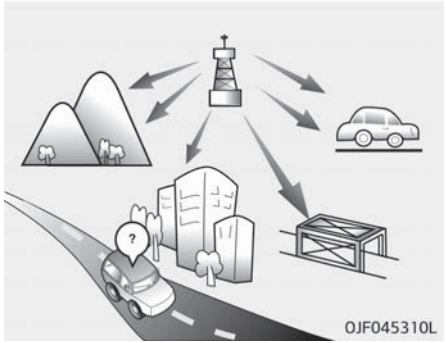

FM broadcasts are transmitted at high frequencies and do not bend to follow the earth's surface. Because of this, FM broadcasts generally begin to fade at short distances from the station. Also, FM signals are easily affected by buildings, mountains, or other obstructions. These can result in certain listening conditions which might lead you to believe a problem exists with your radio. The following conditions are normal and do not indicate radio trouble:

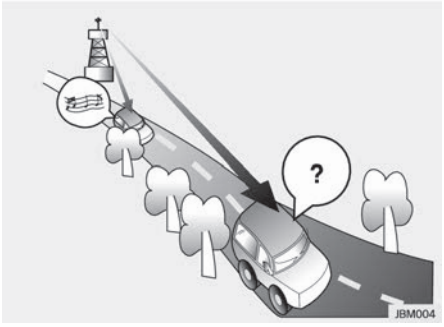

- Fading - As your vehicle moves away from the radio station, the signal will weaken and sound will begin to fade. When this occurs, we suggest that you select another stronger station.

- Flutter/Static - Weak FM signals or large obstructions between the transmitter and your radio can disturb the signal causing static or fluttering noises to occur. Reducing the treble level may lessen this effect until the disturbance clears.

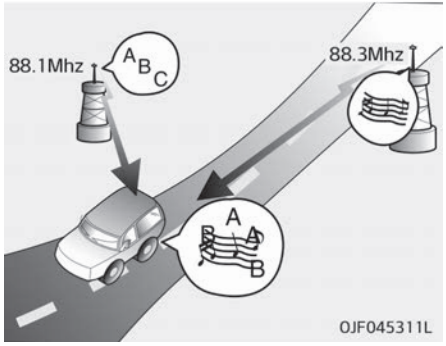

- Station Swapping - As a FM signal weakens, another more powerful signal near the same frequency may begin to play. This is because your radio is designed to lock onto the clearest signal. If this occurs, select another station with a stronger signal.

- Multi-Path Cancellation - Radio signals being received from several directions can cause distortion or fluttering. This can be caused by a direct and reflected signal from the same station, or by signals from two stations with close frequencies. If this occurs, select another station until the condition has passed.

Using a cellular phone or a two-way radio

When a cellular phone is used inside the vehicle, noise may be produced from the audio system. This does not mean that something is wrong with the audio equipment. In such a case, use the cellular phone at a place as far as possible from the audio equipment.

⚠ CAUTION

When using a communication system such as a cellular phone or a radio set inside the vehicle, a separate external antenna must be fitted. When a cellular phone or a radio set is used with an internal antenna alone, it may interfere with the vehicle's electrical system and adversely affect safe operation of the vehicle.

⚠ WARNING

Do not use a cellular phone while driving. Stop at a safe location to use a cellular phone.

Driving your vehicle

Engine exhaust can be dangerous! 5-04
Before driving 5-05
Before entering vehicle 5-05
Necessary inspections 5-05
Before starting 5-05
Engine start/stop button 5-07
Illuminated engine start/stop button 5-07
Engine start/stop button position 5-07
Starting the engine 5-09
Automatic transaxle 5-12
Automatic transaxle operation 5-12
Good driving practices 5-17
Launch Control 5-18
Launch Control Re-operation (3) 5-19
Automatic transmission(shift-by-wire) 5-21
Automatic transmission operation 5-21
Parking 5-26
LCD display messages 5-26
Good driving practices 5-28
Launch Control 5-30
Limited use of Launch Control (3) 5-31
The eco-coasting system 5-32
The Eco-Coasting system setting 5-32
Eco-Coasting operation conditions 5-32
The Eco-Coasting system release conditions 5-33
All Wheel Drive (AWD) 5-34
Using All Wheel Drive (AWD) 5-34
Emergency precautions 5-36
Limited Slip Differential (LSD) 5-38
Brake system 5-39
Power brakes 5-39
Parking brake 5-41
Electronic parking brake (EPB) 5-42
AUTO HOLD 5-47
Warning messages 5-49
Anti-lock brake system (ABS) 5-50
Electronic stability control (ESC) 5-52
Vehicle stability management (VSM) 5-56
Hill-start assist control (HAC) 5-57
Emergency Stop Signal (ESS) 5-57
Good braking practices 5-58
Forward Collision-Avoidance Assist (FCA) System 5-60
System setting and activation 5-60
FCA warning message and system control 5-61
Brake operation 5-62
FCA front radar / camera sensor 5-63
System malfunction 5-64
Limitation of the system 5-65
Recognizing pedestrians 5-68
Cruise control system 5-70
Cruise control switch 5-71
To set cruise control speed 5-71
To increase cruise control set speed 5-72
To decrease the cruising speed 5-72
To temporarily accelerate with the cruise control on 5-73
To cancel cruise control do one of the following 5-73
To resume cruising speed 5-74
To turn cruise control off 5-74
Manual speed limit assist 5-75
To set speed limit 5-75

5

To turn off the Manual Speed Limit Assist, do one of the following....5-77
Intelligent speed limit warning 5-78
Intelligent speed limit warning activation/deactivation....5-78
Operation....5-78
Display....5-79
Driver's attention....5-80
Smart cruise control with stop & go system 5-82
Smart cruise control switch....5-83
Smart cruise control speed....5-83
Vehicle to vehicle distance setting....5-88
To adjust the sensitivity of smart cruise control....5-92
To convert to cruise control mode....5-93
Limitations of the system....5-93
ISG (Idle stop and go) system 5-98
Auto stop....5-98
Auto start....5-99
Condition of ISG system operation....5-100
ISG system deactivation....5-100
ISG system malfunction....5-100
Drive mode integrated control system....5-102
SMART mode....5-102
SPORT/SPORT+ mode....5-104
ECO mode....5-104
Lane keeping assist (LKA) system 5-106
LKA operation....5-107
LKA malfunction....5-111
LKA function change....5-111
Blind-spot collision warning (BCW) system 5-113
BCW (Blind-Spot Collision Warning) / LCA (Lane Change Assist)....5-114
RCCW (rear cross-traffic collision warning)....5-116
Driver's attention....5-119
Driver attention warning (DAW) system 5-120
System setting and activation....5-120
Resetting the system....5-121
System disabled....5-121
System malfunction....5-122
Economical operation....5-124
Special driving conditions....5-126
Hazardous driving conditions....5-126
Rocking the vehicle....5-126
Smooth cornering....5-127
Driving at night....5-127
Driving in the rain....5-128
Driving in flooded areas....5-128
Driving off-road....5-129
Highway driving....5-129
Winter driving....5-130
Snowy or icy conditions....5-130
Use high quality ethylene glycol coolant....5-132
Check battery and cables....5-132
Change to winter weight oil if necessary....5-132
Check spark plugs and ignition system....5-132
To keep locks from freezing....5-133
Use approved window washer anti-freeze in system..5-133
Don't let your parking brake freeze....5-133
Don't let ice and snow accumulate underneath....5-133
Carry emergency equipment....5-133

Trailer towing (If equipped)....5-134
Hitches....5-135
Safety chains....5-136
Trailer brakes....5-136
Driving with a trailer....5-136
Vehicle weight....5-143
Base curb weight....5-143
Vehicle curb weight....5-143
Cargo weight....5-143
GAW (Gross axle weight)....5-143
GAWR (Gross axle weight rating)....5-143
GVW (Gross vehicle weight)....5-143
GVWR (Gross vehicle weight rating)....5-143
Overloading....5-143

ENGINE EXHAUST CAN BE DANGEROUS!

⚠ WARNING

■ ENGINE EXHAUST CAN BE DANGEROUS!

Engine exhaust fumes can be extremely dangerous. If, at any time, you smell exhaust fumes inside the vehicle, open the windows immediately.

- **Do not inhale exhaust fumes.**
  Exhaust fumes contain carbon monoxide, a colorless, odorless gas that can cause unconsciousness and death by asphyxiation.
- **Be sure the exhaust system does not leak.**
  The exhaust system should be checked whenever the vehicle is raised to change the oil or for any other purpose.
  If the problem is not solved, have the system checked by a professional workshop. Kia recommends to visit an authorized Kia dealer/service partner.
- **Do not run the engine in an enclosed area.**
  Letting the engine idle in your garage, even with the garage door open, is a hazardous practice. Never run the engine in your garage any longer than it takes to start the engine and back the vehicle out.
- **Avoid idling the engine for prolonged periods with people inside the vehicle.**
  If it is necessary to idle the engine for a prolonged period with people inside the vehicle, be sure to do so only in an open area with the air intake set at "Fresh" and fan operating at one of the higher speeds so fresh air is drawn into the interior.

If you must drive with the tailgate/trunk open because you are carrying objects that make this necessary:

1. **Close all windows.**
2. **Open side vents.**
3. **Set the air intake control at "Fresh", the air flow control at "Floor" or "Face" and the fan at one of the higher speeds.**

To assure proper operation of the ventilation system, be sure the ventilation air intakes located just in front of the windshield are kept clear of snow, ice, leaves or other obstructions.

BEFORE DRIVING

Before entering vehicle

- Be sure that all windows, outside mirror(s), and outside lights are clean.
- Check the condition of the tires.
- Check under the vehicle for any sign of leaks.
- Be sure there are no obstacles behind you if you intend to back up.

Necessary inspections

Fluid levels, such as engine oil, engine coolant, brake fluid, and washer fluid should be checked on a regular basis, with the exact interval depending on the fluid. Further details are provided in Chapter 7, Maintenance.

⚠ WARNING

Driving while distracted can result in a loss of vehicle control, that may lead to an accident, severe personal injury, and death. The driver's primary responsibility is in the safe and legal operation of a vehicle, and use of any handheld devices, other equipment, or vehicle systems which

(Continued)

(Continued)

take the driver's eyes, attention and focus away from the safe operation of a vehicle or which are not permissible by law should never be used during operation of the vehicle.

Before starting

- Close and lock all doors.
- Position the seat so that all controls are easily reached.
- Adjust the inside and outside rear-view mirrors.
- Be sure that all lights work.
- Check all gauges.
- Check the operation of warning lights when the ignition switch is turned to the ON position.
- Release the parking brake and make sure the brake warning light goes out.

For safe operation, be sure you are familiar with your vehicle and its equipment.

⚠ WARNING

All passengers must be properly belted whenever the vehicle is moving. Refer to "Seat belts" on page 3-19 for more information on their proper use.

⚠ WARNING

Always check the surrounding areas near your vehicle for people, especially children, before putting a vehicle into "D (Drive)" or "R (Reverse)".

⚠ WARNING

■ Driving under the influence of alcohol or drugs

Drinking and driving is dangerous. Drunk driving is the number one contributor to the highway death toll each year. Even a small amount of alcohol will affect your reflexes, perceptions and judgement. Driving

(Continued)

(Continued)

while under the influence of drugs is as dangerous or more dangerous than driving drunk.
You are much more likely to have a serious accident if you drink or take drugs and drive.
If you are drinking or taking drugs, don't drive. Do not ride with a driver who has been drinking or taking drugs. Choose a designated driver or call a cab.

⚠ WARNING

- **When you intend to park or stop the vehicle with the engine on, be careful not to depress the accelerator pedal for a long period of time. It may overheat the engine or exhaust system and cause fire.**

(Continued)

(Continued)

- **When you make a sudden stop or turn the steering wheel rapidly, loose objects may drop on the floor and it could interfere with the operation of the foot pedals, possibly causing an accident. Keep all things in the vehicle safely stored.**
- **If you do not focus on driving, it may cause an accident. Be careful when operating what may disturb driving such as audio or heater. It is the responsibility of the driver to always drive safely.**

ENGINE START/STOP BUTTON (IF EQUIPPED)

Illuminated engine start/stop button



Whenever the front door is opened, the engine start/stop button will illuminate for your convenience. The light will go off after about 30 seconds when the door is closed. It will also go off immediately when the engine start/stop button is ON position.

Engine start/stop button position

OFF

To turn off the engine (START/RUN position) or vehicle power (ON position), press the engine start/stop button with the shift lever in the P (Park) position. When you press the engine start/stop button without the shift lever in the P (Park) position, the engine start/stop button will not change to the OFF position but to the ACC position.

Vehicles equipped with anti-theft steering column lock

The steering wheel locks when the engine start/stop button is in the OFF position to protect you against theft. It locks when the door is opened.
If the steering wheel is not locked properly when you open the driver's door, the warning chime will sound. Try locking the steering wheel again. If the problem is not solved, have the system checked by a professional workshop. Kia recommends to visit an authorized Kia dealer/service partner.

In addition, if the engine start/stop button is in the OFF position after the driver's door is opened, the steering wheel will not lock and the warning chime will sound. In such a situation, close the door. Then the steering wheel will lock and the warning chime will stop.

✻ NOTICE

If the steering wheel doesn't unlock properly, the engine start/stop button will not work. Press the engine start/stop button while turning the steering wheel right and left to release the tension.

⚠ CAUTION

You are able to turn off the engine (START/RUN) or vehicle power (ON), only when the vehicle is not in motion. In an emergency situation while the vehicle is in motion, you are able to turn the engine off and to the ACC position by pressing the engine start/stop button for more than

(Continued)

(Continued)

2 seconds or 3 times successively within 3 seconds. If the vehicle is still moving, you can restart the engine without depressing the brake pedal by pressing the engine start/stop button with the shift lever in the N (Neutral) position.

ACC (accessory)



Press the engine start/stop button while it is in the OFF position without depressing the brake pedal.

The steering wheel unlocks (if equipped with anti-theft steering column lock) and electrical accessories are operational.
If the engine start/stop button is in the ACC position for more than 1 hour, the button is turned off automatically to prevent battery discharge.
Accessory is displayed on the LCD of the cluster.

ON

Press the engine start/stop button while it is in the ACC position without depressing the brake pedal.
The warning lights can be checked before the engine is started. Do not leave the engine start/stop button in the ON position for a long time. The battery may discharge, because the engine is not running.

START/RUN

To start the engine, depress the brake pedal and press the engine start/stop button with the shift lever in the P (Park) or the N (Neutral) position. For your safety, start the engine with the shift lever in the P (Park) position.

✻ NOTICE

If you press the engine start/stop button without depressing the brake pedal for automatic transaxle vehicles, the engine will not start and the engine start/stop button changes as follow:
OFF ➡ ACC ➡ ON ➡ OFF or ACC

✻ NOTICE

If you leave the engine start/stop button in the ACC or ON position for a long time, the battery will discharge.

⚠ WARNING

- **Never press the engine start/stop button while the vehicle is in motion. This would result in loss of directional control and braking function, which could cause an accident.**

(Continued)

(Continued)

- **The anti-theft steering column lock (if equipped) is not a substitute for the parking brake. Before leaving the driver's seat, always make sure the shift lever is engaged in P (Park), set the parking brake fully and shut the engine off. Unexpected and sudden vehicle movement may occur if these precautions are not taken.**
- **Never reach for the engine start/stop button or any other controls through the steering wheel while the vehicle is in motion. The presence of your hand or arm in the area could cause loss of vehicle control, an accident and serious bodily injury or death.**
- **Do not place any movable objects around the driver's seat as they may move while driving, interfere with the driver and lead to an accident.**

Starting the engine

⚠ WARNING

- **Always wear appropriate shoes when operating your vehicle. Unsuitable shoes (high heels, ski boots etc.) may interfere with your ability to use the brake, accelerator and clutch pedal.**
- **Do not start the vehicle with the accelerator pedal depressed. The vehicle can move and lead to an accident.**
- **Wait until the engine rpm is normal. The vehicle may suddenly move if the brake pedal is released when the rpm is high.**

✻ NOTICE

■ Kick down mechanism

Use the kick down mechanism for maximum acceleration. Depress the accelerator pedal beyond the pressure point. The automatic transmis-

(Continued)

(Continued)

sion will shift to a lower gear depending on the engine speed.

Starting the gasoline engine

1. Carry the smart key or leave it inside the vehicle.
2. Make sure the parking brake is firmly applied.
3. Automatic transaxle - Place the transaxle shift lever in P (Park). Depress the brake pedal fully.

   You can also start the engine when the shift lever is in the N (Neutral) position.
4. Press the engine start/stop button. It should be started without depressing the accelerator.
5. Do not wait for the engine to warm up while the vehicle remains stationary.
   Start driving at moderate engine speeds. (Steep accelerating and decelerating should be avoided.)

Starting the diesel engine

To start the diesel engine when the engine is cold, it has to be pre-heated before starting the engine and then have to be warmed up before starting to drive.

1. Make sure the parking brake is applied.
2. Automatic Transaxle - Place the transaxle shift lever in P (Park). Depress the brake pedal fully.

   You can also start the engine when the shift lever is in the N (Neutral) position.

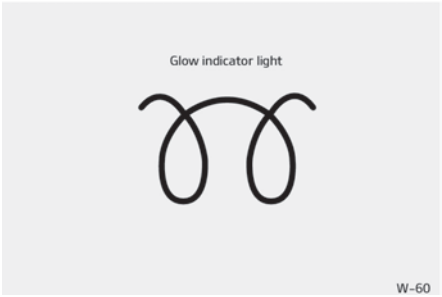

3. Press the engine start/stop button while depressing the brake pedal.
4. Continue depressing the brake pedal until the illuminated glow indicator goes off. (approximately 5 seconds)
5. The engine starts running when the glow indicator goes off.

✻ NOTICE

If the engine start/stop button is pressed once more while the engine is pre-heating, the engine may start.

Starting and stopping the engine for turbocharger intercooler

1. Do not race or accelerate the engine immediately after starting.
   If the engine is cold, idle for several seconds before sufficient lubrication is ensured in the turbocharger unit.
2. After high speed or extended driving, requiring a heavy engine load, idle the engine about 1 minute before turning it off.
   This idle time will allow the turbocharger to cool prior to shutting the engine off.

⚠ CAUTION

Do not turn the engine off immediately after it has been subjected to a heavy load. Doing so may cause severe damage to the engine or turbocharger unit.

- Even if the smart key is in the vehicle, if it is far away from you, the engine may not start.
- When the engine start/stop button is in the ACC position or above, if any door is opened, the system checks for the smart key. If the smart key is not in the vehicle, a message “Key is not in the vehicle” will appear on the LCD display. And if all doors are closed, the chime will sound for 5 seconds. The indicator or warning will turn off while the vehicle is moving. Always have the smart key with you.

⚠ WARNING

The engine will start, only when the smart key is in the vehicle.
Never allow children or any person who is unfamiliar with the vehicle touch the engine start/stop button or related parts.

⚠ CAUTION

If the engine stalls while the vehicle is in motion, do not attempt to move the shift lever to the P (Park) position. If the traffic and road conditions permit, you may put the shift lever in the N (Neutral) position while the vehicle is still moving and press the engine start/stop button in an attempt to restart the engine.

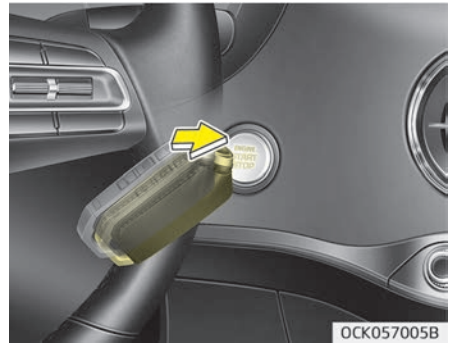

✻ NOTICE

- If the battery is weak or the smart key does not work correctly, you can start the engine by pressing the engine start/stop button with the smart key.
  The side with the lock button should be contacted directly.
  When you press the engine start/stop button directly with the smart key, the smart key should contact the button at a right angle.

(Continued)

(Continued)

- When the stop lamp fuse is blown, you cannot start the engine normally.
  Replace the fuse with a new one. If it is not possible, you can start the engine by pressing the engine start/stop button for 10 seconds while it is in the ACC position. The engine can start without depressing the brake pedal. But for your safety always depress the brake and clutch pedal before starting the engine.

⚠ CAUTION

Do not press the engine start/stop button for more than 10 seconds except when the stop lamp fuse is blown.

AUTOMATIC TRANSAXLE (IF EQUIPPED)

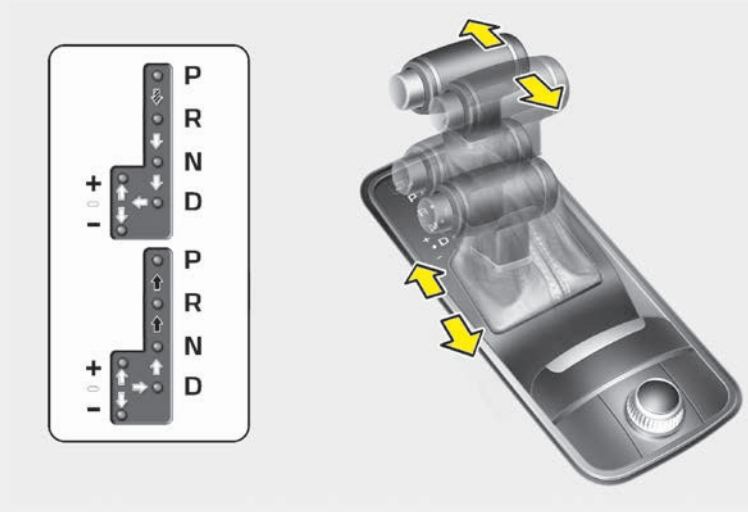

Automatic transaxle operation

The automatic transaxle has 8 forward speeds and one reverse speed. The individual speeds are selected automatically, depending on the position of the shift lever.

✻ NOTICE

The first few shifts on a new vehicle, if the battery has been disconnected, may be somewhat abrupt. This is a normal condition, and the shifting sequence will adjust after shifts are cycled a few times by the TCM (Transaxle Control Module) or PCM (Powertrain Control Module).

For smooth operation, depress the brake pedal when shifting from N (Neutral) to a forward or reverse gear.

⚠ WARNING

■ Automatic transaxle (Continued)

(Continued)

- **Always check the surrounding areas near your vehicle for people, especially children, before shifting a vehicle into D (Drive) or R (Reverse).**
- **Before leaving the driver's seat, always make sure the shift lever is in the P (Park) position; then set the parking brake fully and shut the engine off. Unexpected and sudden vehicle movement can occur if these precautions are not followed in the order identified.**
- **Do not use the engine brake (shifting from a high gear to lower gear) rapidly on slippery roads. The vehicle may slip causing an accident.**

⚠ CAUTION

- **To avoid damage to your transaxle, do not accelerate the engine in R (Reverse) or any forward gear position with the brakes on.**

(Continued)

(Continued)

- **When stopped on an uphill grade, do not hold the vehicle stationary with engine power. Use the brake pedal or the parking brake.**
- **Do not shift from N (Neutral) or P (Park) into D (Drive), or R (Reverse) when the engine is above idle speed.**

Transaxle ranges

The indicator lights in the instrument cluster displays the shift lever position when the ignition switch is in the ON position.

P (Park)

Always come to a complete stop before shifting into P (Park). This position locks the transaxle and prevents the rear wheels from rotating.

⚠ WARNING

- **Shifting into P (Park) while the vehicle is in motion will cause the drive wheels to lock which will cause you to lose control of the vehicle.**
- **Do not use the P (Park) position in place of the parking brake. Always make sure the shift lever is latched in the P (Park) position and set the parking brake fully.**
- **Never leave a child unattended in a vehicle.**

⚠ CAUTION

The transaxle may be damaged if you shift into P (Park) while the vehicle is in motion.

R (Reverse)

Use this position to drive the vehicle backward.

⚠ CAUTION

Always come to a complete stop before shifting into or out of R (Reverse); you may damage the transaxle if you shift into R (Reverse) while the vehicle is in motion, except as explained in "Rocking the vehicle" on page 5-126.

N (Neutral)

The wheels and transaxle are not engaged. The vehicle will roll freely even on the slightest incline unless the parking brake or service brakes are applied.

⚠ WARNING

Do not drive with the shift lever in N (Neutral).
The engine brake will not work and lead to an accident.

D (Drive)

This is the normal forward driving position. The transaxle will automatically shift through a 8-gear sequence, providing the best fuel economy and power.

For extra power when passing another vehicle or climbing grades, depress the accelerator pedal fully (more than 82%) until the kick down mechanism (if equipped) works with a clicking noise, at which time the transaxle will automatically downshift to the next lower gear.

✻ NOTICE

- Always come to a complete stop before shifting into D (Drive).
- A clicking noise heard from the kick down mechanism by depressing the accelerator pedal fully is a normal condition.

Parking in N (Neutral) gear

Follow below steps when parking and you want the vehicle to move when pushed.

1. After parking your vehicle, step on the brake pedal and move the shift lever to [P] with the ignition button in [ON] or while the engine is running.
2. If the parking brake is applied unlock the parking brake.
   - For EPB (Electronic Parking Brake) equipped vehicles, push the brake pedal with the ignition button in [ON] or while the engine is running to disengage the parking brake. If [AUTO HOLD] function is used while driving (If [AUTO HOLD] indicator is on in the cluster), press [AUTO HOLD] switch and [AUTO HOLD] function should be turn off.
3. While pressing the brake pedal, turn the ignition button [OFF].
   - For smart key equipped vehicles, the ignition switch can be moved to [OFF] only when the shift lever is in [P].
4. Change the gear shift lever to [N] (Neutral) while pressing the brake pedal and pushing [SHIFT LOCK RELEASE] button or inserting, pressing down a tool (e.g. flathead screw-driver) into the [SHIFT LOCK RELEASE] access hole at the same time. Then, the vehicle will move when external force is applied.

⚠ CAUTION

- **With the exception of parking in neutral gear, always park the vehicle in [P] (Park) for safety and engage the parking brake.**
- **Before parking in [N] (Neutral) gear, first make sure the parking ground is level and flat. Do not park in [N] gear on any slopes or gradients.**
  If parked and left in [N], the vehicle may move and cause serious damage and injury.
- **After the ignition switch has been turned off, the electronic parking brake cannot be disengaged.**
- **For EPB (Electronic Parking Brake) equipped vehicles with [AUTO HOLD] function used while driving, if the ignition button has been turned [OFF], the electronic parking brake will be engaged automatically. Therefore, [AUTO HOLD] function should be turned off before the ignition button is turned off. Therefore, [AUTO HOLD] function should be turned off before the ignition button is turned off.**



Manual mode

Whether the vehicle is stationary or in motion, manual mode is selected by pushing the shift lever from the D (Drive) position into the manual gate. To return to D (Drive) range operation, push the shift lever back into the main gate.
In manual mode, moving the shift lever backwards and forwards will allow you to make gearshifts rapidly.

Up (+):	Push the lever forward once to shift up one gear.
Down (-):	Pull the lever backwards once to shift down one gear.

✻ NOTICE

- In manual mode, the driver must execute upshifts in accordance with road conditions, taking care to keep the engine speed below the red zone.
- In manual mode, only the 8 forward gears can be selected. To reverse or park the vehicle, move the shift lever to the R (Reverse) or P (Park) position as required.
- In manual mode, downshifts are made automatically when the vehicle slows down. When the vehicle stops, 1st gear is automatically selected.
- In manual mode, when the engine rpm approaches the red zone shift points are varied to upshift automatically.
- To maintain the required levels of vehicle performance and safety, the system may not execute certain gearshifts when the shift lever is operated.

(Continued)

(Continued)

- When driving on a slippery road, push the shift lever forward into the +(up) position. This causes the transaxle to shift into the 2nd gear which is better for appropriate driving on a slippery road. Push the shift lever to the -(down) side to shift back to the 1st gear.

Paddle shifter (if equipped)

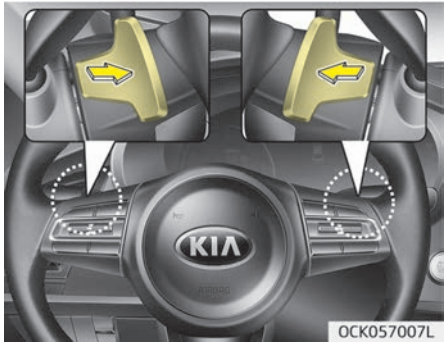

The paddle shift function is available when the shift lever is in the D position or the manual mode.

With the shift lever in the D position

Pull the [+] or [-] paddle shifter once to shift up or down one gear and the system changes from automatic mode to manual mode.
When the vehicle speed is lower than 10 km/h, if you depress the accelerator pedal for more than 5 seconds or if you shift the shift lever from D (Drive) to manual mode and shift it from manual mode to D (Drive) again, the system changes from manual mode to automatic mode.

With the shift lever in the manual mode

Pull the [+] or [-] paddle shifter once to shift up or down one gear.

✻ NOTICE

If you pull the [+] and [-] paddle shifters at the same time, you cannot shift the gear.

Shift lock system

For your safety, the automatic transaxle has a shift lock system which prevents shifting the transaxle from P (Park) into R (Reverse) unless the brake pedal is depressed.

To shift the transaxle from P (Park) into R (Reverse):

1. Depress and hold the brake pedal.
2. Start the engine or turn the ignition switch to the ON position.
3. Move the shift lever.

If the brake pedal is repeatedly depressed and released with the shift lever in the P (Park) position, a chattering noise & vibration near the shift lever may be heard. This is a normal condition.

⚠ WARNING

Always fully depress the brake pedal before and while shifting out of the P (Park) position into another position to avoid inadvertent motion of the vehicle which could injure persons in or around the vehicle.

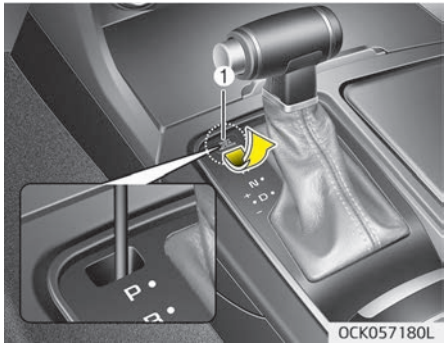

Shift-lock override

If the shift lever cannot be moved from the P (Park) position into R (Reverse) position with the brake pedal depressed, continue depressing the brake, then do the following:

1. Place the ignition switch in the LOCK/OFF position.
2. Apply the parking brake.
3. Carefully remove the cap (1) covering the shift-lock release access hole.
4. Insert a tool (e.g. flathead screwdriver) into the access hole and press down on the tool.
5. Move the shift lever.
6. Remove the tool from the shiftlock override access hole then install the cap.
7. Have the system inspected by a professional workshop. Kia recommends to visit an authorized Kia dealer/service partner.

Ignition key interlock system (if equipped)

The ignition key cannot be removed unless the shift lever is in the P (Park) position.

Good driving practices

- Never move the shift lever from P (Park) or N (Neutral) to any other position with the accelerator pedal depressed.
- Never move the shift lever into P (Park) when the vehicle is in motion.
- Be sure the vehicle is completely stopped before you attempt to shift into R (Reverse) or D (Drive).
- Never take the vehicle out of gear and coast down a hill. This may be extremely hazardous. Always leave the vehicle in gear when moving.
- Do not "ride" the brakes. This can cause them to overheat and malfunction. Instead, when you are driving down a long hill, slow down and shift to a lower gear. When you do this, engine braking will help slow down the vehicle.
- Slow down before shifting to a lower gear. Otherwise, the lower gear may not be engaged.
- Always use the parking brake. Do not depend on placing the transaxle in P (Park) to keep the vehicle from moving.
- Exercise extreme caution when driving on a slippery surface. Be especially careful when braking, accelerating or shifting gears. On a slippery surface, an abrupt change in vehicle speed can cause the drive wheels to lose traction and the vehicle to go out of control.
- Optimum vehicle performance and economy is obtained by smoothly depressing and releasing the accelerator pedal.

⚠ WARNING

- **Always buckle-up! In a collision, an unbelted occupant is significantly more likely to be seriously injured or killed than a properly belted occupant.**
- **Avoid high speeds when cornering or turning.**
- **Do not make quick steering wheel movements, such as sharp lane changes or fast, sharp turns.**
- **The risk of rollover is greatly increased if you lose control of your vehicle at highway speeds.**
- **Loss of control often occurs if two or more wheels drop off the roadway and the driver oversteers to reenter the roadway.**
- **In the event your vehicle leaves the roadway, do not steer sharply. Instead, slow down before pulling back into the travel lanes.**
- **Never exceed posted speed limits.**

⚠ WARNING

If your vehicle becomes stuck in snow, mud, sand, etc., then you may attempt to rock the vehicle free by moving it forward and backward. Do not attempt this procedure if people or objects are anywhere near the vehicle. During the rocking operation the vehicle may suddenly move forward of backward as it becomes unstuck, causing injury or damage to nearby people or objects.

Moving up a steep grade from a standing start

To move up a steep grade from a standing start, depress the brake pedal, shift the shift lever to D (Drive). Select the appropriate gear depending on load weight and steepness of the grade, and release the parking brake. Depress the accelerator gradually while releasing the brake pedal.

When accelerating from a stop on a steep hill, the vehicle may have a tendency to roll backwards.

Launch Control

Launch Control Operation

- When using Launch Control with an engine that is not warmed up enough, a driver should always make sure that the engine's cooling water is warmed up and reaches a recommended temperature.
- To operate ESC Off state 2, Press and hold ESC button for more than 3 seconds in Sports mode. (Status Display on Cluster Screen)
- For launching, stop the vehicle and keep a steering wheel straight.
- Footbrakes, EPB and Auto Hold must be released for smooth launching.
- Press the brake firmly with your left foot in transmission D mode, while pressing the accelerator pedal down fully with your right foot. Then, the Launch Control Ready (1) will be in place.
- To start a vehicle, with your right foot pressing the accelerator pedal down fully, remove your left foot from the brake. (within 4 seconds) (Launch Control Active (2) Status Display on Cluster Screen)

- If both the brakes and accelerate pedals were in application and a driver removes his feet only from the accelerate pedal afterwards, Launch Control will be automatically deactivated. Or, if the vehicle does not start after 4 seconds with a driver's feet on both brake and accelerate pedals, Launch Control will be automatically deactivated as well.
- Do not operate both brake and accelerate pedals simultaneously for longer than 4 seconds without leaving the vehicle.
- When re-using Launch Control, a driver should have the vehicle cool down sufficiently by driving.

Launch Control Ready (1)

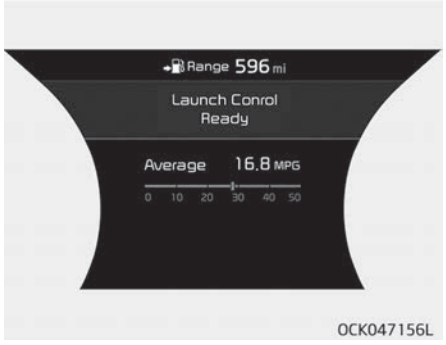

Launch Control Active (2)

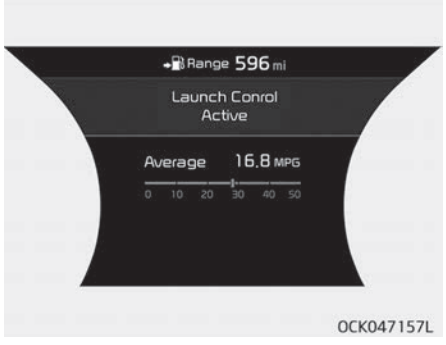

Limited use of Launch Control (3)

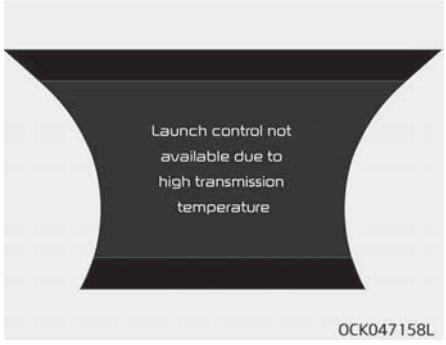

Launch Control Re-operation (3)

- A warning message will pop up on the screen if the transmission fluid temperature is above a certain level while using Launch Control. Also, Launch Control will be automatically deactivated.
- To address the issue as above, a driver should cool down the transmission fluid temperature by driving the vehicle. (Driving at a constant speed over 60 KPH is highly recommended)

⚠ CAUTION

- **For your safety, Launch Control use should be limited only in safe places. Launch Control use on public roads are not recommendable.**
- **Launching performance can vary depending on fuel, environment, tire, and loading conditions.**
- **It is highly recommended to complete vehicle brake-in process before using Launch Control. Constant used of Launch Control can put enormous stress on transmission, engine, and drive shafts.**

AUTOMATIC TRANSMISSION(SHIFT-BY-WIRE) (IF EQUIPPED)

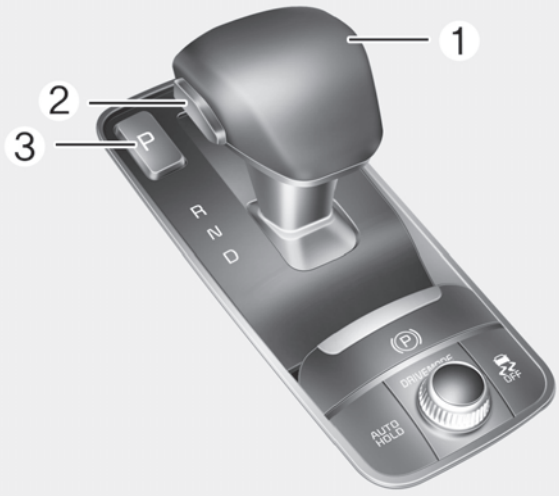

When you move the shift lever (1), depress the brake pedal while pressing the UNLOCK button (2).
To shift the gear to P (Park), press the [P] button(3).

OCK057008LB

Automatic transmission operation

The automatic transmission has 8 forward speeds and one reverse speed. The individual speeds are selected automatically in the D (Drive) position.

⚠ WARNING

To reduce the risk of serious injury or death:

- **ALWAYS check the surrounding areas near your vehicle for people, especially children, before shifting a vehicle into D (Drive) or R (Reverse).**
- **Before leaving the driver's seat, always make sure the shift lever is in the P (Park) position, then set the parking brake, and place the Engine Start/Stop button in the OFF position. Unexpected and sudden vehicle movement can occur if these precautions are not followed.**
- **Do not use engine braking (shifting from a high gear to lower gear) rapidly on slippery roads. The vehicle may slip causing an accident.**

Transmission ranges

The indicator in the instrument cluster displays the shift lever position when the Engine Start/Stop button is in the ON position.
However, if the gear is in N (Neutral) or P (Park), the position is displayed on the instrument cluster when the Engine Start/Stop button is in the OFF or ACC position.

P (Park)



Always come to a complete stop before shifting into P (Park).
To shift the gear from R (Rear), N (Neutral), D (Drive) or Manual mode to P (Park), press the [P] button.

If you turn off the engine in D (Drive), R (Rear) or Manual mode the shifting automatically changes to P (Park).
When you park the vehicle, press the [P] button while depressing the brake pedal and then apply the parking brake.

⚠ WARNING

- **Shifting into P (Park) while the vehicle is in motion may cause you to lose control of the vehicle.**
- **After the vehicle has stopped, always make sure the shift lever is in P (Park), apply the parking brake, and turn the engine off.**
- **Do not use the P (Park) position in place of the parking brake.**

R (Reverse)

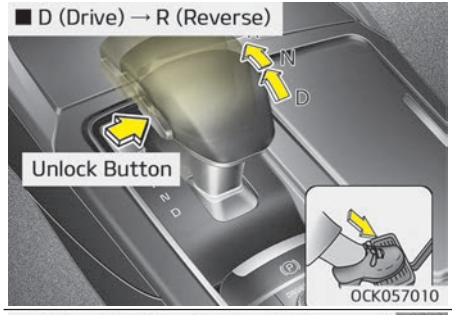

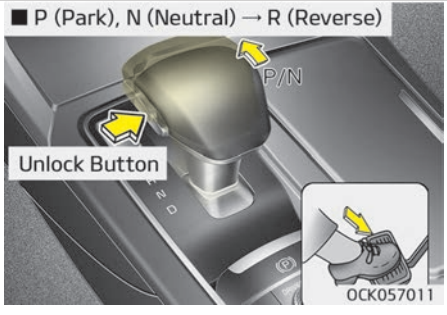

Use this position to drive the vehicle backward.
To move the shift lever to R (Rear), press the [UNLOCK] button while depressing the brake pedal and then move the shift lever forward.

N (Neutral)

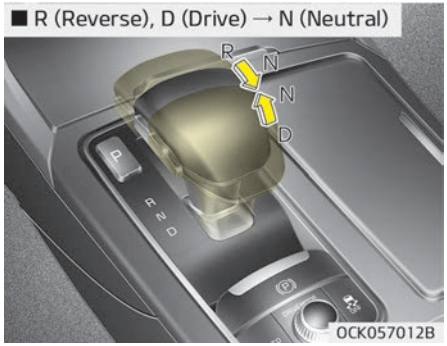

The wheels and transmission are not engaged.
Use N (Neutral) if you need to restart a stalled engine, or if it is necessary to stop with the engine ON. Shift into P (Park) if you need to leave your vehicle for any reason.
Always depress the brake pedal when you are shifting from N (Neutral) to another gear.
In N (Neutral), if the driver attempts to turn off the engine, the transmission remains in the N (Neural) position and the Engine Start/Stop button will be in the ACC position.

The actuators work to maintain the transmission in the N (Neutral) and make normal mechanical sound.
To turn off the engine, re-press the Engine Start/Stop button to the ON position, press the [P] button, and press the Engine Start/Stop button to the OFF position.
When either the driver's door or the front passenger's door is opened with the Engine Start/Stop button in the ACC position and the shift lever in N (Neutral) position, the engine is automatically turned OFF and the transmission automatically changes to the P (Park) position.

⚠ WARNING

- **Do not shift into gear unless your foot is firmly on the brake pedal. Use the N (Neutral) position to idle a vehicle for an extended period of time. The wheels and the transmission are not engaged. While parking the vehicle with the engine running, depress the brake pedal or apply the parking brake.**

(Continued)

(Continued)

- **Do not drive with the shift lever in N (Neutral). The engine brake will not work and may lead to an accident.**

D (Drive)

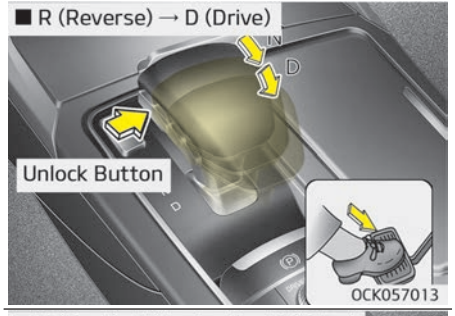

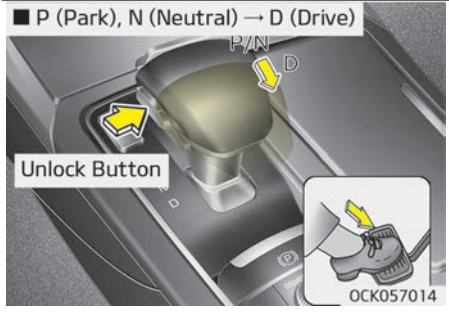

This is the normal driving position. The transmission will automatically shift through a 8-gear sequence, providing the best fuel economy and power.
For extra power when passing another vehicle or driving uphill, depress the accelerator pedal further until you feel the transmission downshift to a lower gear.
To shift into D (Drive), depress the brake pedal and press the [UNLOCK] button on the shift lever. Move the shift lever backward.
To shift into D (Drive) from N (Neutral), you must depress the brake pedal.

✻ NOTICE

Always come to complete stop before shifting into D (Drive).

Parking in N (Neutral) gear

Follow below steps when parking and you want the vehicle to move when pushed.

1. After parking your vehicle, step on the brake pedal and press the [P] button with the ignition button in [ON] or while the engine is running.
2. If the parking brake is applied unlock the parking brake.
   - For EPB (Electronic Parking Brake) equipped vehicles, push the brake pedal with the ignition button in [ON] or while the engine is running to disengage the parking brake. If [AUTO HOLD] function is used while driving (If [AUTO HOLD] indicator is on in the cluster), press [AUTO HOLD] switch and [AUTO HOLD] function should be turn off.
3. While pressing the brake pedal, turn the ignition button [OFF].
   - For smart key equipped vehicles, the ignition switch can be [OFF] only after pressing the [P] button.
4. Press the brake pedal and push [SHIFT LOCK RELEASE] button or insert, press down a tool (e.g. flat-head screw-driver) into the [SHIFT LOCK RELEASE] access hole at the same time. Then, the gear will change to the N (Neutral) position. the vehicle will move when external force is applied.

⚠ CAUTION

- **With the exception of parking in neutral gear, always park the vehicle in [P] (Park) for safety and engage the parking brake.**
- **Before parking in [N] (Neutral) gear, first make sure the parking ground is level and flat. Do not park in [N] gear on any slopes or gradients.**
  If parked and left in [N], the vehicle may move and cause serious damage and injury.
- **After the ignition switch has been turned off, the electronic parking brake cannot be disengaged.**
- **For EPB (Electronic Parking Brake) equipped vehicles with [AUTO HOLD] function used while driving, if the ignition button has been turned [OFF], the electronic parking brake will be engaged automatically. Therefore, [AUTO HOLD] function should be turned off before the ignition button is turned off.**

Paddle shifter (Manual mode)

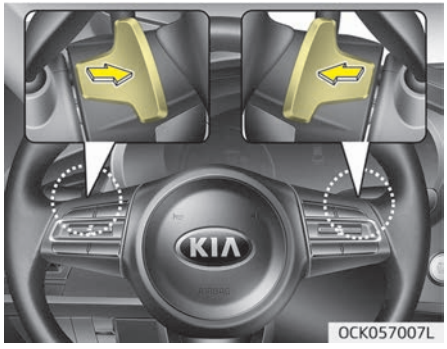

The paddle shifter is available when the shift lever is in the D (Drive) position.
Pull the [+] or [-] paddle shifter once to shift up or down one gear and the system changes from automatic mode to manual mode.
When the vehicle speed is lower than 10km/h, if you depress the accelerator pedal for more than 5 seconds or if you move the shift lever to D (Drive) again, the system changes from manual mode to automatic mode.

✻ NOTICE

If the [+] and [-] paddle shifters are pulled at the same time, gear shift may not occur.

Shift-lock system

For your safety, the automatic transmission has a shift-lock system which prevents shifting the transmission from P (Park) into R (Reverse) or D (Drive) unless the [UNLOCK] button is pressed while depressing the brake pedal.
To shift the transmission from P (Park) into R (Reverse) or D (Drive):

1. Depress and hold the brake pedal.
2. Start the engine or place the Engine Start/Stop button in the ON position.
3. Move the shift lever to R (Reverse) or D (Drive) while pressing the [UNLOCK] button.

When the battery is discharged

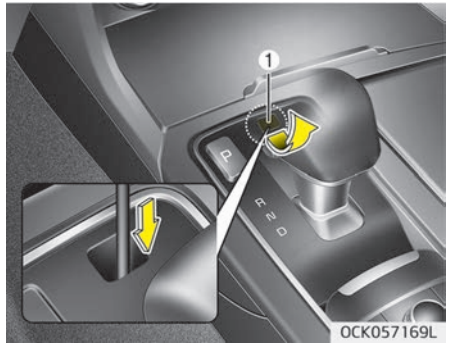

You can move the shift lever, when the battery is discharged. However, it will not change the gear from P (Parking) to N (Neutral) or others.
In emergencies, do the followings to move the shift lever to N (Neutral) on a level ground.

1. Connect the cables between the jump-starting terminals inside the engine compartment and the battery terminals of another vehicle/ supplementary battery.
   For more information refer to “Jump starting” on page 6-05.

2. Release the parking brake with the Engine Start/Stop button in the ON position.
3. Press the Engine Start/Stop button to the OFF position.
4. Remove the cap-cover (1) and insert a tool (e.g. flathead screwdriver) into the access hole and press down on the tool while depressing the brake pedal. Then, the gear will change to the N (Neutral) position. It should be pressed within 3 minutes after turning OFF the engine.

✻ NOTICE

In situations the gear needs to be changed from P (Park) to N (Neutral) when the Engine Start/Stop button is in the OFF position, refer to step 4.
The actuators work to shift the gear in the N (Neutral) or P (Parking) and make normal mechanical sound.

Parking

Always come to a complete stop and continue to depress the brake pedal. Move the shift lever into the P (Park) position, apply the parking brake, and place the Engine Start/Stop button in the OFF position. Take the Key with you when exiting the vehicle.

⚠ WARNING

When you stay in the vehicle with the engine running, be careful not to depress the accelerator pedal for a long period of time. The engine or exhaust system may overheat and start a fire.
The exhaust gas and the exhaust system are very hot. Keep away from the exhaust system components.
Do not stop or park over flammable materials, such as dry grass, paper or leaves. They may ignite and cause a fire.

LCD display messages

Shifter Malfunction



The warning message appears on the LCD display, when the transmission or the shift lever does not properly operate in the P (Park) position. In this case, have the vehicle checked by a professional workshop immediately. Kia recommends to visit an authorized Kia dealer/service partner.

Check shift lever



The warning message appears on the LCD display, when there is a malfunction with one of the key transmission components.
In this case, have the vehicle checked by a professional workshop immediately. Kia recommends to visit an authorized Kia dealer/service partner.

Shifting conditions not met



The warning message appears on the LCD display, when engine RPM is too high, or when driving speed is too fast to shift the gear.
We recommend you to decrease your RPM level or slow down before shifting the gear.

Press brake pedal to change gear

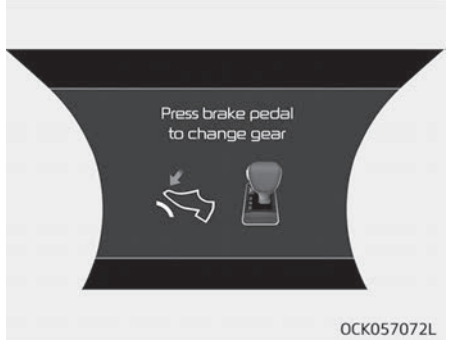

The warning message appears on the LCD display, when the brake pedal is not depressed while shifting the gear.
We recommend you to depress the brake pedal and then shift the gear.

Shift to P after stopping



The warning message appears on the LCD display, when the brake pedal is not depressed while shifting the gear.
We recommend you to depress the brake pedal and then shift the gear.

Press UNLOCK to change gear



The warning message appears on the LCD display, when the [UNLOCK] button is not pressed while shifting the gear.
We recommend you to press the [UNLOCK] button and then shift the gear.

PARK engaged



The message appears on the LCD display, when the P (Park) position is engaged.

NEUTRAL engaged

The message appears on the LCD display, when the N (Neutral) position is engaged.

Good driving practices

- Never move the shift lever from P (Park) or N (Neutral) to any other position with the accelerator pedal depressed.

- Never move the shift lever into P (Park) when the vehicle is in motion. Be sure the vehicle is completely stopped before you attempt to shift into R (Reverse) or D (Drive).
- Do not move the shift lever to N (Neutral) when driving. Doing so may result in an accident because of a loss of engine braking and the transmission could be damaged.
- Do not drive with your foot resting on the brake pedal. Even light, but consistent pedal pressure can result in the brakes overheating, brake wear and possibly even brake failure.
- Depressing both accelerator and brake pedals at the same time can trigger logic for engine power reduction to assure vehicle deceleration. Vehicle acceleration will resume after the brake pedal is released.
- When driving in Sports Mode, slow down before shifting to a lower gear. Otherwise, the lower gear may not be engaged if the engine rpms are outside of the allowable range.
- Always apply the parking brake when leaving the vehicle. Do not depend on placing the transmission in P (Park) to keep the vehicle from moving.
- Exercise extreme caution when driving on a slippery surface. Be especially careful when braking, accelerating or shifting gears. On a slippery surface, an abrupt change in vehicle speed can cause the drive wheels to lose traction and may cause loss of vehicle control resulting in an accident.
- Optimum vehicle performance and economy is obtained by smoothly depressing and releasing the accelerator.

⚠ WARNING

To reduce the risk of SERIOUS INJURY or DEATH:
- **ALWAYS wear your seatbelt. In a collision, an unbelted occupant is significantly more likely to be seriously injured or killed than a properly belted occupant.**
- **Avoid high speeds when cornering or turning.**
- **Do not make quick steering wheel movements, such as sharp lane changes or fast, sharp turns.**

(Continued)

(Continued)
- **The risk of rollover is greatly increased if you lose control of your vehicle at highway speeds.**
- **Loss of control often occurs if two or more wheels drop off the roadway and the driver over steers to reenter the roadway.**
- **In the event your vehicle leaves the roadway, do not steer sharply. Instead, slow down before pulling back into the travel lanes.**
- **Kia recommends you follow all posted speed limits.**

✻ NOTICE

■ Kickdown Mechanism

Use the kickdown mechanism for maximum acceleration. Depress the accelerator pedal beyond the pressure point. The automatic transmission will shift to a lower gear depending on the engine speed.

Launch Control

Launch Control Operation

- When using Launch Control with an engine that is not warmed up enough, a driver should always make sure that the engine's cooling water is warmed up and reaches a recommended temperature.
- To operate ESC Off state 2, Press and hold ESC button for more than 3 seconds in Sports mode. (Status Display on Cluster Screen)
- For launching, stop the vehicle and keep a steering wheel straight.
- Footbrakes, EPB and Auto Hold must be released for smooth launching.
- Press the brake firmly with your left foot in transmission D mode, while pressing the accelerator pedal down fully with your right foot. Then, the Launch Control Ready (1) will be in place.
- To start a vehicle, with your right foot pressing the accelerator pedal down fully, remove your left foot from the brake. (within 4 seconds) (Launch Control Active (2) Status Display on Cluster Screen)
- If both the brakes and accelerate pedals were in application and a driver removes his feet only from the accelerate pedal afterwards, Launch Control will be automatically deactivated. Or, if the vehicle does not start after 4 seconds with a driver's feet on both brake and accelerate pedals, Launch Control will be automatically deactivated as well.
- Do not operate both brake and accelerate pedals simultaneously for longer than 4 seconds without leaving the vehicle.
- When re-using Launch Control, a driver should have the vehicle cool down sufficiently by driving.

Launch Control Ready (1)

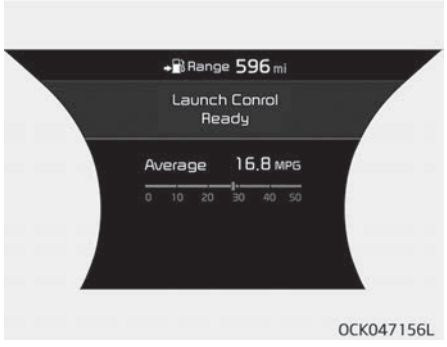

Launch Control Active (2)

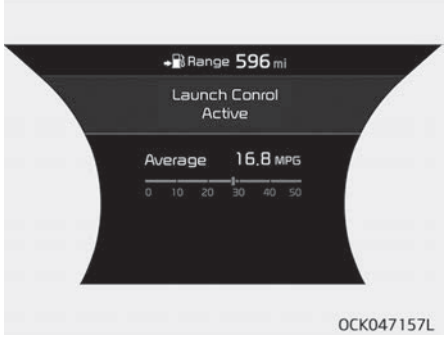

Limited use of Launch Control (3)

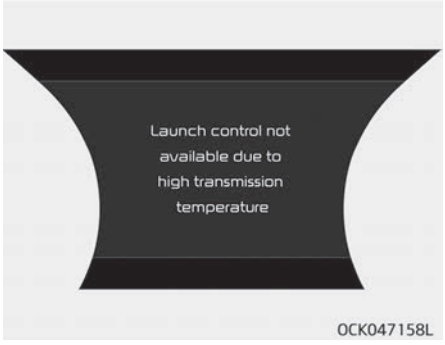

Limited use of Launch Control (3)

- A warning message will pop up on the screen if the transmission fluid temperature is above a certain level while using Launch Control. Also, Launch Control will be automatically deactivated.
- To address the issue as above, a driver should cool down the transmission fluid temperature by driving the vehicle. (Driving at a constant speed over 60 KPH is highly recommended)

⚠ CAUTION

- **For your safety, Launch Control use should be limited only in safe places. Launch Control use on public roads are not recommendable.**
- **Launching performance can vary depending on fuel, environment, tire, and loading conditions.**
- **It is highly recommended to complete vehicle brake-in process before using Launch Control. Constant used of Launch Control can put enormous stress on transmission, engine, and drive shafts.**

THE ECO-COASTING SYSTEM (IF EQUIPPED)

When certain conditions are met, the engine is automatically decoupled from the transmission while the shift lever is remained in D (Drive). In this ECO Coasting mode, the engine stays at idling speed to reduce fuel consumption and increase coasting distance. The engine is automatically coupled back again when ECO Coasting deactivation conditions are met. Please refer to ECO Coasting activation and deactivation conditions.

The Eco-Coasting system setting

The Eco-Coasting system activate if you activate the Eco-Coasting system from AVN : "Setting ➟ Vehicle ➟Coasting" (Please refer to AVN manual for more details.)
When the Eco-Coasting system is activated, the message "Coasting" appears at the top center of the cluster.

⚠ CAUTION

- **If the accelerator pedal is pressed quickly for accelerating with the Eco-Coasting system in operation, acceleration may occur after the engagement of the clutch inside the transmission. In turn, the driver may continue to feel acceleration even after the system is turned off.**
- **Driving with the Eco-Coasting system off may be required in some cases since the engine brake is not applied while the Eco-Coasting system is in operation.**
- **Operation the AVN screen to activate or deactivate Eco-Coasting system while driving may be dangerous as the driver's attention is dispersed.**

Eco-Coasting operation conditions

The Eco-Coasting system is activated when the accelerator pedal is depressed and released under the following conditions.

- When the driving mode is ECO mode.
- When driver acceleration is SMART ECO in SMART mode.
- When the shift lever is in the D (Drive) position.
- When Cruise Control/Smart Cruise Control button is OFF.
- If you do not step on the accelerator pedal and brake pedal.
- When the vehicle speed is within the range of 55 km/h to 160 km/h.
- If the road gradient is within the range of -5% to +5%.
- In SMART mode, if the distance between the vehicle ahead and the relative speed is within a certain range (if the Smart Cruise system is equipped)

❊ If the front radar for smart cruise system cannot operate normally, the inter-vehicle distance and relative speed condition are automatically ignored.
❊ The Eco-Coasting system works after the engine on, transmission warmed up and engine sensor self-diagnosis is completed after starting.
❊ Depending on the driving situation, Eco-Coasting operation may be

temporarily delayed even if the above conditions are met.

The Eco-Coasting system release conditions

The Eco-Coasting system will be automatically released when the following conditions are met.

- When the drive mode is COMFORT or SPORT mode.
- In SMART mode, when driver acceleration is SMART COMFORT or SMART SPORT.
- When using the paddle shift of the steering wheel.
- When the Cruise Control/Smart Cruise Control button is on. (The / CRUISE indicator is on.)
- When pressing the accelerator pedal or brake pedal.
- When the vehicle speed is outside the range of 55 km/h to 160 km/h.
- Road inclination is less than -5% or exceeds +5%.
- In SMART mode, if the headway distance to the vehicle ahead is too close of the relative speed changes momentarily (if the smart cruise control system is equipped)

❊ If lane change is predicated in SMART mode (LKA warning by turn signal lamp operation or steering wheel).

❊ It is recommended to turn off the Eco-Coasting system in the driving condition where frequent acceleration or deceleration is repeated. Change the drive mode to COMFORT or SPORT mode, or disable Eco-Coasting mode on the AVN screen.

ALL WHEEL DRIVE (AWD) (IF EQUIPPED)

Using All Wheel Drive (AWD)

The All Wheel Drive (AWD) System delivers engine power to front and rear wheels for maximum traction. AWD is useful when extra traction is required, such as when driving slippery, muddy, wet, or snow-covered roads.
If the system determines there is a need for four wheel drive, the engine's driving power is distributed to all four wheels automatically.

⚠ WARNING

If the AWD warning light ( ) stays on the instrument cluster, your vehicle may have a malfunction with the AWD system. When the AWD warning light ( )illuminates, have your vehicle checked by a professional workshop. Kia recommends to visit an authorized Kia dealer/service partner.

⚠ WARNING

To reduce the risk of SERIOUS INJURY or DEATH:

- **Do not drive in conditions that exceed the vehicles intended design such as challenging off-road conditions.**
- **Avoid high speeds when cornering or turning.**
- **Do not make quick steering wheel movements, such as sharp lane changes or fast, sharp turns.**
- **The risk of a rollover is greatly increased if you lose control of your vehicle at highway speeds.**
- **Loss of control often occurs if two or more wheels drop off the roadway and the driver over steers to reenter the roadway.**
- **In the event your vehicle leaves the roadway, do not steer sharply. Instead, slow down before pulling back into the travel lanes.**

✻ NOTICE

- Do not drive in water if the level is higher than the bottom of the vehicle.
- Check your brake condition once you are out of mud or water. Depress the brake pedal several times as you move slowly until you feel normal braking return.
- Shorten your scheduled maintenance interval if you drive in off-road conditions such as sand, mud or water (see “Maintenance Under Severe Usage Conditions” on page 7-18).
- Make sure that AWD vehicle is towed by a flatbed tow truck.

For safe AWD operation

Before driving

- Make sure all passengers are wearing seat belts.

- Sit upright and closer to the steering wheel than usual. Adjust the steering wheel to a position comfortable for you to drive.

Driving on snow-covered or icy roads

- Start off slowly by applying the accelerator pedal gently.
- Use snow tires or tire chains.
- Keep sufficient distance between your vehicle and the vehicle in front of you.
- Use engine braking during deceleration.
- Avoid speeding, rapid acceleration, sudden brake applications, and sharp turns to prevent skids.

Driving in sand or mud

- Maintain slow and constant speed.
- Use tire chains driving in mud if necessary.
- Keep sufficient distance between your vehicle and the vehicle in front of you.
- Reduce vehicle speed and always check the road condition.
- Avoid speeding, rapid acceleration, sudden brake applications, and sharp turns to prevent getting stuck.

✻ NOTICE

When the vehicle is stuck in snow, sand or mud, place a non-slip material under the drive wheels to provide traction OR slowly spin the wheels in forward and reverse directions which causes a rocking motion that may free the vehicle. However, avoid running the engine continuously at high rpm, doing so may damage the AWD system.

✻ NOTICE

- When using Snow Tires, mount them on all four wheels.

(Continued)

(Continued)

- When using Tire Chains, install them on all four tires. However, if you are in a situation to use only two tire chains, install them on the rear tires. In this case, drive a short distance to prevent damage to the AWD system.
- If tire chains must be used, use AutoSock (fabric snow chain) and install the tire chain after reviewing the instructions provided with the tire chains.

For more information on Snow Tires and Tire Chains, refer to "Winter driving" on page 5-130.

Driving up or down hills

- Driving uphill
  - Before starting off, check if it is possible to drive uphill.
  - Drive as straight as possible.
- Driving downhill
  - Do not change gear while driving downhill. Select gear before driving downhill.
  - Drive as slowly using engine braking while driving downhill.

- Drive straight as possible.

⚠ WARNING

Exercise extreme caution driving up or down steep hills. The vehicle may flip depending on the grade, terrain and water/mud conditions.

Emergency precautions

Tires

⚠ WARNING

Do not use tire and wheel with different size and type from the one originally installed on your vehicle. It can affect the safety and performance of your vehicle, which could lead to steering failure or rollover causing serious injury.

When replacing the tires, be sure to equip all four tires with the tire and wheel of the same size, type, tread, brand and load-carrying capacity.

In case of emergency such as tire puncture, repair it using TMK (Tire Mobility Kit) for temporary use. Afterwards, have the tire be inspected by an authorized Kia dealer/service partner.

⚠ WARNING



Never start or run the engine while an AWD vehicle is raised on a jack. The vehicle can slip or roll off of a jack causing serious injury or death to you or those nearby.

Towing

AWD vehicles must be towed with a wheel lift and dollies or flatbed equipment with all the wheels off the ground. For more information, refer to “Towing” on page 6-31.

Vehicle inspection

- When the vehicle is on a car lift, do not operate the front and rear wheels separately. All four wheels should be operated.
- Never engage the parking brake while running the engine on a car lift. This may damage the AWD system.

Dynamometer testing

An AWD vehicle must be tested on a special four wheel chassis dynamometer.

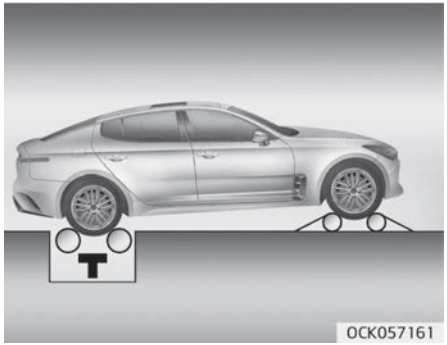

An AWD vehicle should not be tested on a 2WD roll tester. If a 2WD roll tester must be used, perform the following procedure:

1. Check the tire pressures recommended for your vehicle.
2. Place the rear wheels on the roll tester for a speedometer test as shown in the illustration.
3. Release the parking brake.
4. Place the front wheels on the temporary free roller as shown in the illustration.

⚠ WARNING

Keep away from the front of the vehicle while the vehicle is in gear on the dynamometer. The vehicle can jump forward and cause serious injury or death.

LIMITED SLIP DIFFERENTIAL (LSD) (IF EQUIPPED)

Limited Slip Differential (LSD) refers to a system equipped with a mechanism that controls the differential functions of the wheels in the Rear- Differential. It allows for an enhancement in handling performance during turning.
Never run wheels with one of them lifted by the jack. It is extremely dangerous for a vehicle equipped with Limited Slip Differential.
Be sure to inject oil for exclusive use of LSD when replacing Rear Differential (for LSD) Oil.

✻ NOTICE

There could be slight noises coming from friction plates inside LSD when the LSD-equipped vehicle is turning around, but it is a normal sound in the process of LSD operation and the noises don't indicate vehicle failure. Oil change is highly recommended in case that the sound becomes louder.

BRAKE SYSTEM

Power brakes

Your vehicle has power-assisted brakes that adjust automatically through normal usage.

In the event that the power-assisted brakes lose power because of a stalled engine or some other reason, you can still stop your vehicle by applying greater force to the brake pedal than you normally would. The stopping distance, however, will be longer.

When the engine is not running, the reserve brake power is partially depleted each time the brake pedal is applied. Do not pump the brake pedal when the power assist has been interrupted.

Pump the brake pedal only when necessary to maintain steering control on slippery surfaces.

⚠ WARNING

■ Brakes

(Continued)

(Continued)

- **Do not drive with your foot resting on the brake pedal. This will create abnormal high brake temperatures, excessive brake lining and pad wear, and increased stopping distances.**
- **When descending a long or steep hill, shift to a lower gear and avoid continuous application of the brakes. Continuous brake application will cause the brakes to overheat and could result in a temporary loss of braking performance.**
- **Wet brakes may impair the vehicle's ability to safely slow down; the vehicle may also pull to one side when the brakes are applied. Applying the brakes lightly will indicate whether they have been affected in this way.**
  Always test your brakes in this fashion after driving through deep water. To dry the brakes, apply them lightly while maintaining a safe forward speed until brake performance returns to normal.

(Continued)

(Continued)

- **Always confirm the position of the brake and accelerator pedal before driving. If you don't check the position of the accelerator and brake pedal before driving, you may depress the accelerator instead of the brake pedal. It may cause a serious accident.**

In the event of brake failure

If service brakes fail to operate while the vehicle is in motion, you can make an emergency stop with the parking brake. The stopping distance, however, will be much greater than normal.

⚠ WARNING

■ Parking brake

Applying the parking brake while the vehicle is moving at normal speeds can cause a sudden loss of control of the vehicle. If you must use the parking brake to stop the vehicle, use great caution in applying the brake.

⚠ CAUTION

Do not operate the parking brake while the vehicle is moving except in an emergency situation. It could damage the vehicle system and may endanger driving safety.

Disc brakes wear indicator

When your brake pads are worn and new pads are required, you will hear a high-pitched warning sound from your front brakes or rear brakes (if equipped). You may hear this sound come and go or it may occur whenever you depress the brake pedal.
Please remember that some driving conditions or climates may cause a brake squeal when you first apply (or lightly apply) the brakes. This is normal and does not indicate a problem with your brakes.

⚠ CAUTION

- **To avoid costly brake repairs, do not continue to drive with worn brake pads.**

(Continued)

(Continued)

- **Always replace the front or rear brake pads as pairs.**

⚠ WARNING

■ Brake wear

This brake wear warning sound means your vehicle needs service. If you ignore this audible warning, you will eventually lose braking performance, which could lead to a serious accident.

Brembo Brake (if equipped)

It is normal for vehicles equipped with high-performance brakes (Large-diameter brembo brakes for enhanced braking performance) to generate braking noises such as a noise of screech, “rrrrr” sound, cracking sound, and a noise of scratching. Also, Circular patterns caused by disc surface friction may occur, which is normal and doesn’t affect braking performance.

⚠ CAUTION

Abnormal deformation and wear of parts are attributable to excessive high-speed repetitive braking even if Brembo brake is equipped. All this causes vibration when braking. A driver should observe the speed limit to prevent damage to the brake caused by excessive braking.
Warranty does not apply when brake deformation occurs due to excessive high-speed repetitive braking, track driving or racing.

Parking brake

Applying the parking brake

Foot type



To engage the parking brake, first apply the foot brake and then depress the parking brake pedal down as far as possible.

⚠ CAUTION

- **Driving with the parking brake applied will cause excessive brake pad (or lining) and brake rotor wear.**
- **Do not operate the parking brake while the vehicle is moving except in an emergency situation. It could damage the vehicle system and make endanger driving safety.**

Releasing the parking brake

Foot type



To release the parking brake, depress the parking brake pedal a second time while applying the foot brake. The pedal will automatically extend to the fully released position.

⚠ WARNING

- **To prevent unintentional movement when stopped and leaving the vehicle, do not use the shift lever instead of the parking brake. Set the parking brake and make sure the shift lever is securely positioned in P (Park) for Automatic Transaxle equipped vehicles.**
- **Never allow anyone who is unfamiliar with the vehicle to touch the parking brake. If the parking brake is released unintentionally, serious injury may occur.**
- **All vehicles should always have the parking brake fully engaged when parking to avoid inadvertent movement of the vehicle which can injure occupants or pedestrians.**



Check the brake warning light by turning the ignition switch ON (do not start the engine). This light will be illuminated when the parking brake is applied with the ignition switch in the START or ON position.
Before driving, be sure the parking brake is fully released and the brake warning light is off.
If the brake warning light remains on after the parking brake is released while the engine is running, there may be a malfunction in the brake system. Immediate attention is necessary.

If at all possible, cease driving the vehicle immediately. If that is not possible, use extreme caution while operating the vehicle and only continue to drive the vehicle until you can reach a safe location or repair shop.

Electronic parking brake (EPB) (if equipped)

Applying the parking brake

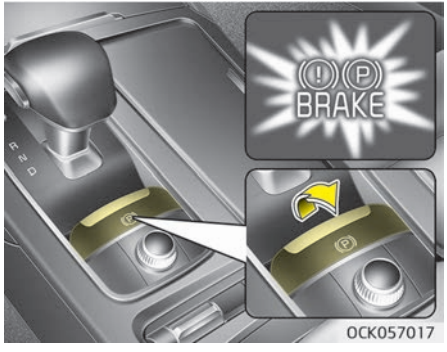

To apply the EPB (electronic parking brake):

1. Depress the brake pedal.
2. Pull up the EPB switch.

Make sure the warning light comes on.

Also, the EPB is applied automatically if the Auto Hold button is on when the engine is turned off. However, if you keep pressing the EPB switch till the engine is turned off, the EPB will not be applied.

✻ NOTICE

On a steep incline or when pulling a trailer if the vehicle does not stand still, do as follows:

1. Apply the EPB.
2. Pull up the EPB switch for more than 3 seconds.

⚠ CAUTION

Do not operate the parking brake while the vehicle is moving except in an emergency situation. It could damage the vehicle system and endanger driving safety.

Releasing the parking brake

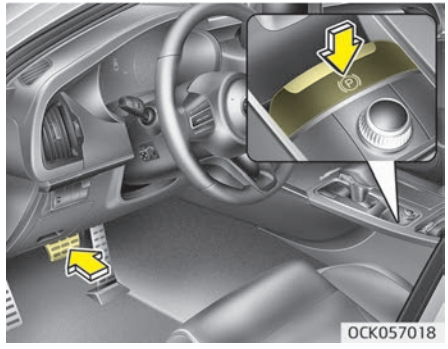

To release the EPB (Electronic parking brake), press the EPB switch in the following condition:

- Have the ignition switch or engine start/stop button in the ON position.
- Depress the brake pedal.

Make sure the brake warning light goes off.

To release EPB (Electronic parking brake) automatically:

- Shift lever in P (Park)
  With the engine running depress the brake pedal and shift out of P (Park) to R (Reverse) or D (Drive).
- Shift lever in N (Neutral)
  With the engine running depress the brake pedal and shift out of N (Neutral) to R (Reverse) or D (Drive).
- Automatic Transaxle
  1. Start the engine.
  2. Fasten the driver's seat belt.
  3. Close the driver's door, engine hood and trunk (tailgate).
  4. Depress the accelerator pedal while the shift lever is in R (Rear), D (Drive) or manual mode.

Make sure the brake warning light goes off.

✻ NOTICE

- For your safety, you can engage the EPB even though the ignition switch or engine stop/start button is in the OFF position, but you cannot release it.
- For your safety, depress the brake pedal and release the parking brake manually with the EPB switch when you drive downhill or when backing up the vehicle.

⚠ CAUTION

- **If the parking brake warning light is still on even though the EPB has been released, have the system checked by a professional workshop. Kia recommends to visit an authorized Kia dealer/service partner.**
- **Do not drive your vehicle with the EPB applied. It may cause excessive brake pad and brake rotor wear.**

EPB (Electronic parking brake) may be automatically applied when:

- The EPB is overheated
- Requested by other systems

✻ NOTICE

If the driver turns the engine off by mistake while Auto Hold is operating, EPB will be automatically applied. (Vehicle's equipped with Auto Hold)

System warming

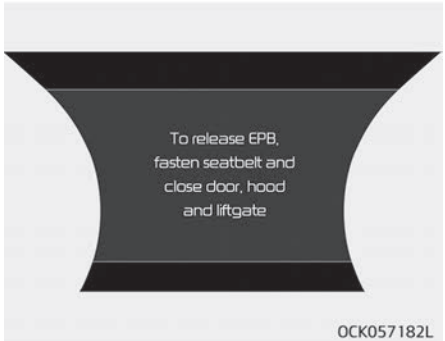

- If you try to drive off depressing the accelerator pedal with the EPB applied, but doesn't release automatically, a warning will sound and a message will appear.
- If the driver's seat belt is not fastened and the engine hood or trunk (tailgate) is opened, a warning will sound and a message will appear.
- If there is a problem with the vehicle, a warning may sound and a message may appear.

If the above situation occurs, depress the brake pedal and release EPB by pressing the EPB switch.

⚠ WARNING

- **To prevent unintentional movement when stopped and leaving the vehicle, do not use the shift lever in place of the parking brake. Set the parking brake and make sure the shift lever is securely positioned in P (Park).**

(Continued)

(Continued)

- **Never allow anyone who is unfamiliar with the vehicle to touch the parking brake. If the parking brake is released unintentionally, serious injury may occur.**
- **All vehicles should always have the parking brake fully engaged when parking to avoid inadvertent movement of the car which can injure occupants or pedestrians.**

⚠ CAUTION

- **A click sound may be heard while operating or releasing the EPB, but these conditions are normal and indicate that the EPB is functioning properly.**
- **When leaving your keys with a parking lot attendant or valet, make sure to inform him/her how to operate the EPB.**
- **The EPB may malfunction if you drive with the EPB applied.**
- **When you automatically release EPB by depressing the accelerator pedal, depress it slowly.**

System warning



When the conversion from Auto Hold to EPB is not working properly a warning will sound and a message will appear.

⚠ CAUTION

Depress the brake pedal when the above message appears for the Auto Hold and EPB may not activate.

System warning



If the EPB is applied while Auto Hold is activated because of ESC (Electronic Stability Control) signal, a warning will sound and a message will appear.

EPB malfunction indicator (if equipped)



This warning light illuminates if the engine start/stop button is changed to the ON position and goes off in approximately 3 seconds if the system is operation normally.
If the EPB malfunction indicator remains on, comes on while driving, or does not come on when the ignition switch or the engine start/stop button is changed to the ON position, this indicates that the EPB may have malfunctioned.

If this occurs, have the system checked by a professional workshop. Kia recommends to visit an authorized Kia dealer/service partner.
The EPB malfunction indicator may illuminate when the ESC indicator comes on to indicate that the ESC is not working properly, but it does not indicate a malfunction of the EPB.

⚠ CAUTION

- **The EPB warning light may illuminate if the EPB switch operates abnormally. Shut the engine off and turn it on again after a few minutes. The warning light will go off and the EPB switch will operate normally. However, if the EPB warning light is still on, have the system checked by a professional workshop.**
  Kia recommends to visit an authorized Kia dealer/service partner.
- **If the parking brake warning light does not illuminate or blinks even though the EPB switch was pulled up, the EPB is not applied.**

(Continued)

(Continued)

- **If the parking brake warning light blinks when the EPB warning light is on, press the switch, then pull it up. Once more press it back to its original position and pull it back up. If the EPB warning does not go off, have the system checked by a professional workshop.**
  Kia recommends to visit an authorized Kia dealer/service partner.

Emergency braking

If there is a problem with the brake pedal while driving, emergency braking is possible by pulling up and holding the EPB switch. Braking is possible only while you are holding the EPB switch.

⚠ WARNING

Do not operate the parking brake while the vehicle is moving except in an emergency situation.

✻ NOTICE

During emergency braking by the EPB, the parking brake warning light will illuminate to indicate that the system is operating.

When the EPB (Electronic parking brake) does not release

If the EPB does not release normally, load the vehicle on a flatbed tow truck and have the system checked by a professional workshop. Kia recommends to visit an authorized Kia dealer/service partner.

⚠ CAUTION

If you continuously notice a noise or burning smell when the EPB is used for emergency braking, have the system checked by a professional workshop. Kia recommends to visit an authorized Kia dealer/service partner.

AUTO HOLD (if equipped)

The Auto Hold maintains the vehicle in a standstill even though the brake pedal is not depressed after the driver brings the vehicle to a complete stop by depressing the brake pedal.

Set up

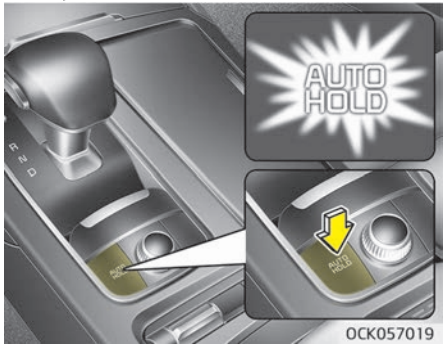

1. With the driver's door, engine hood closed, fasten the driver's seat belt or depress the brake pedal and then press the Auto Hold button. The white AUTO HOLD indicator will come on and the system will be in the standby position.

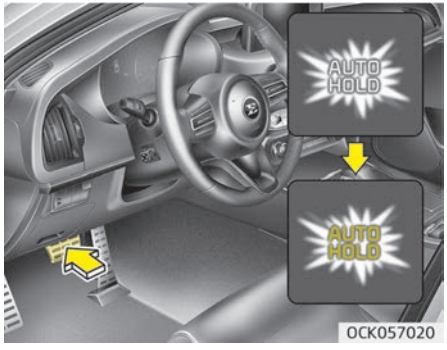

2. When you stop the vehicle completely by depressing the brake pedal, the AUTO HOLD indicator changes from white to green.
3. The vehicle will remain stationary even if you release the brake pedal.
4. If EPB is applied, Auto Hold will be released.

Leaving

If you press the accelerator pedal with the shift lever in D (Drive) or manual mode, the Auto Hold will be released automatically and the vehicle will start to move. The indicator changes from green to white.

⚠ WARNING

When driving off from Auto Hold by depressing the accelerator pedal, always check the surrounding area near your vehicle.
Slowly depress the accelerator pedal for a smooth launch.

Cancel

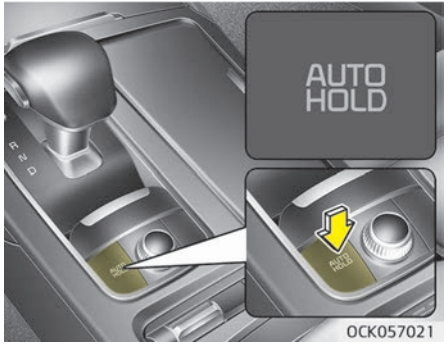

To cancel the Auto Hold operation, press the Auto Hold switch. The AUTO HOLD indicator will go out.

To cancel the Auto Hold operation when the vehicle is at a standstill, press the Auto Hold switch while depressing the brake pedal.

✻ NOTICE

- The Auto Hold does not operate when:
  - The driver's seat belt is unfastened and driver's door is opened
  - The engine hood is opened
  - The shift lever is in P (Park) or R (Reverse)
  - The EPB is applied
- For your safety, the Auto Hold automatically switches to EPB in such cases:
  - The driver's seat belt is unfastened and driver's door is opened
  - The engine hood is opened
  - The vehicle is in a standstill for more than 10 minutes

(Continued)

(Continued)

  - The vehicle is standing on a steep slope
  - The vehicle moved several times

  In these cases, the brake warning light comes on, the AUTO HOLD indicator changes from green to white, and a warning sounds and a message will appear to inform you that EPB has been automatically engaged. Before driving off again, press foot brake pedal, check the surrounding area near your vehicle and release parking brake manually with the EPB switch.
- If the AUTO HOLD indicator lights up yellow, the Auto Hold is not working properly. In this case, have your vehicle inspected by a professional workshop. Kia recommends to contact an authorized Kia dealer/service partner.
- While operating Auto Hold, you may heard mechanical noise. However, it is normal operation noise.

⚠ WARNING

- **Press the accelerator pedal slowly when you start the vehicle.**
- **For your safety, cancel the Auto Hold when you drive downhill or back up the vehicle or park the vehicle.**

⚠ CAUTION

If there is a malfunction with the driver's door, engine hood open detection system, the Auto Hold may not work properly.
In this case, have your vehicle inspected by a professional workshop. Kia recommends to contact an authorized Kia dealer/service partner.

Warning messages

Parking brake automatically engaged



When the EPB is applied from Auto Hold, a warning will sound and a message will appear.

AUTO HOLD turning off. Press brake pedal

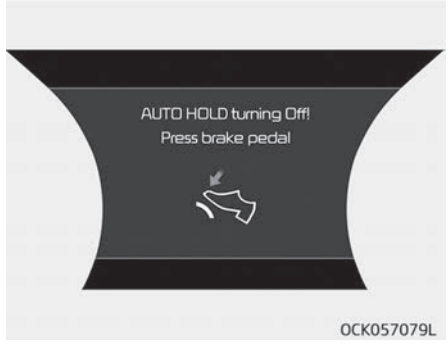

When the conversion from Auto Hold to EPB is not working properly a warning will sound and a message will appear.

✻ NOTICE

When this message is displayed, the Auto Hold and EPB may not operate. For your safety, depress the brake pedal.

Press brake pedal to deactivate AUTO HOLD



If you did not apply the brake pedal when you release the Auto Hold by pressing the [AUTO HOLD] switch, a warning will sound and a message will appear.

AUTO HOLD conditions not met. Fasten seatbelt and close door, hood and liftgate



When you press the [AUTO HOLD] switch, if the driver's door, engine hood are not closed or the driver's seat belt is unfastened, a warning will sound and a message will appear on the LCD display. At this moment, press the [AUTO HOLD] button after closing the driver's door, engine hood and fastening the seat belt.

Anti-lock brake system (ABS)

⚠ WARNING

ABS (or ESC) will not prevent accidents due to improper or dangerous driving maneuvers. Even though vehicle control is improved during emergency braking, always maintain a safe distance between you and objects ahead. Vehicle speeds should always be reduced during extreme road conditions.
The braking distance for vehicle equipped with an anti-lock braking system (or Electronic Stability Control) may be longer than for those without it in the following road conditions.
During these conditions the vehicle should be driven at reduced speeds:

- **Rough, gravel or snow-covered roads.**
- **With tire chains installed.**
- **On roads where the road surface is pitted or has different surface height.**

(Continued)

(Continued)

The safety features of an ABS (or ESC) equipped vehicle should not be tested by high speed driving or cornering. This could endanger the safety of yourself or others.

The ABS continuously senses the speed of the wheels. If the wheels are going to lock, the ABS system repeatedly modulates the hydraulic brake pressure to the wheels.
When you apply your brakes under conditions which may lock the wheels, you may hear a "tik-tik" sound from the brakes, or feel a corresponding sensation in the brake pedal. This is normal and it means your ABS is active.
In order to obtain the maximum benefit from your ABS in an emergency situation, do not attempt to modulate your brake pressure and do not try to pump your brakes. Press your brake pedal as hard as possible or as hard as the situation warrants and allow the ABS to control the force being delivered to the brakes.

✻ NOTICE

A click sound may be heard in the engine compartment when the vehicle begins to move after the engine is started. These conditions are normal and indicate that the anti-lock brake system is functioning properly.

- Even with the anti-lock brake system, your vehicle still requires sufficient stopping distance. Always maintain a safe distance from the vehicle in front of you.
- Always slow down when cornering. The anti-lock brake system cannot prevent accidents resulting from excessive speeds.
- On loose or uneven road surfaces, operation of the anti-lock brake system may result in a longer stopping distance than for vehicles equipped with a conventional brake system.



W-78

⚠ CAUTION

- **If the ABS warning light is on and stays on, you may have a problem with the ABS. In this case, however, your regular brakes will work normally.**

(Continued)

(Continued)

- **The ABS warning light will stay on for approximately 3 seconds after the ignition switch is ON. During that time, the ABS will go through self-diagnosis and the light will go off if everything is normal. If the light stays on, you may have a problem with your ABS. In this case, have your vehicle inspected by a professional workshop. Kia recommends to contact an authorized Kia dealer/service partner.**

⚠ CAUTION

- **When you drive on a road having poor traction, such as an icy road, and operate your brakes continuously, the ABS will be active continuously and the ABS warning light may illuminate. Pull your vehicle over to a safe place and stop the engine.**

(Continued)

(Continued)

- **Restart the engine. If the ABS warning light is off, then your ABS system is normal. Otherwise, you may have a problem with the ABS. In this case, have your vehicle inspected by a professional workshop. Kia recommends to contact an authorized Kia dealer/service partner.**

✻ NOTICE

When you jump start your vehicle because of a drained battery, the engine may not run as smoothly and the ABS warning light may turn on at the same time. This happens because of the low battery voltage. It does not mean your ABS is malfunctioning.

- Do not pump your brakes!
- Have the battery recharged before driving the vehicle.

Electronic stability control (ESC) (if equipped)

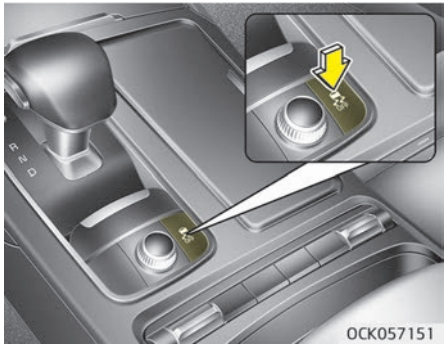

The Electronic Stability Control (ESC) system is designed to stabilize the vehicle during cornering maneuvers. ESC checks where you are steering and where the vehicle is actually going. ESC applies the brakes at individual wheels and intervenes with engine management system to stabilize the vehicle.

⚠ WARNING

Never drive too fast for the road conditions or too quickly when cornering. Electronic stability control (ESC) will not prevent accidents. Excessive speed in turns, abrupt maneuvers and hydroplaning on wet surfaces can still result in serious accidents. Only a safe and attentive driver can prevent accidents by avoiding maneuvers that cause the vehicle to lose traction. Even with ESC installed, always follow all the normal precautions for driving - including driving at safe speeds for the conditions.

The Electronic stability control (ESC) system is an electronic system designed to help the driver maintain vehicle control under adverse conditions. It is not a substitute for safe driving practices. Factors including speed, road conditions and driver steering input can all affect whether ESC will be effective in preventing a loss of control. It is still your responsibility to drive and corner at reasonable speeds and to leave a sufficient margin of safety.

When you apply your brakes under conditions which may lock the wheels, you may hear a "tik-tik" sound from the brakes, or feel a corresponding sensation in the brake pedal. This is normal and it means your ESC is active.

✻ NOTICE

A click sound may be heard in the engine compartment when the vehicle begins to move after the engine is started. These conditions are normal and indicate that the Electronic stability control (ESC) System is functioning properly.

ESC operation

ESC ON condition

-

- When the ignition switch is turned ON, ESC and ESC OFF indicator lights illuminate for approximately 3 seconds, then ESC is turned on.
- Press the ESC OFF button for at least half a second after turning the ignition ON to turn ESC off. (ESC OFF indicator will illuminate). To turn the ESC on, press the ESC OFF button (ESC OFF indicator light will go off).
- When starting the engine, you may hear a slight ticking sound. This is the ESC performing an automatic system self-check and does not indicate a problem.

When operating

When the ESC is in operation, ESC indicator light blinks.

- When the Electronic Stability Control is operating properly, you can feel a slight pulsation in the vehicle. This is only the effect of brake control and indicates nothing unusual.
- When moving out of the mud or slippery road, the engine rpm (revolution per minute) may not increase even if you press the accelerator pedal deeply. This is to maintain the stability and traction of the vehicle and does not indicate a problem.

ESC operation off

ESC OFF state

This car has 2 kinds of ESC off states.
If the engine stops when ESC is off, ESC remains off. Upon restarting the engine, the ESC will automatically turn on again.



- **ESC off state 1**
  To cancel ESC operation, press the ESC OFF button (ESC OFF) shortly (ESC OFF indicator light (ESC OFF) illuminates). At this state, the engine control function does not operate. It means the traction control function does not operate. Brake control function only operates.

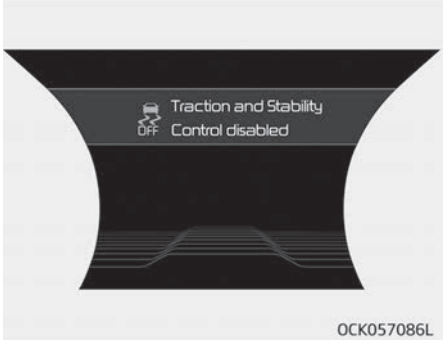

- **ESC off state 2**
  To cancel ESC operation, press the ESC OFF button (ESC OFF) for more than 3 seconds. ESC OFF indicator light (ESC OFF) illuminates and ESC OFF warning chime will sound. At this state, the engine control function and brake control function do not operate. It means the car stability control function does not operate any more.

Indicator light

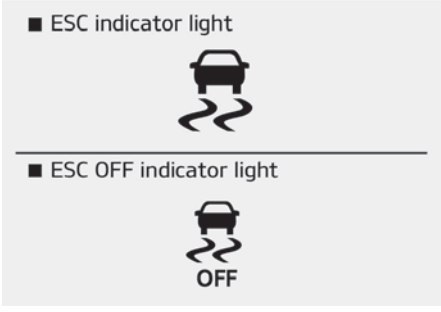

When ignition switch is turned to ON, the indicator light illuminates, then goes off if the ESC system is operating normally.
The ESC indicator light blinks whenever ESC is operating or illuminates when ESC fails to operate. ESC OFF indicator light comes on when the ESC is turned off with the button.

⚠ CAUTION

Driving with varying tire or wheel sizes may cause the ESC system to malfunction. When replacing tires,
(Continued)

(Continued)

make sure they are the same size as your original tires.

⚠ WARNING

The Electronic Stability Control system is only a driving aid; use precautions for safe driving by slowing down on curved, snowy, or icy roads. Drive slowly and don't attempt to accelerate whenever the ESC indicator light is blinking, or when the road surface is slippery.

ESC OFF usage

When driving

- ESC should be turned on for daily driving whenever possible.
- To turn ESC off while driving, press the ESC OFF button while driving on a flat road surface.

⚠ WARNING

Never press the ESC OFF button while ESC is operating (ESC indicator light blinks).
If ESC is turned off while ESC is operating, the vehicle may slip out of control.

✻ NOTICE

- When operating the vehicle on a dynamometer, ensure that the ESC is turned off by pressing the ESC OFF button for more than 3 seconds (ESC OFF light illuminated). If the ESC is left on, it may prevent the vehicle speed from increasing, and result in false diagnosis.
- Turning the ESC off does not affect ABS or brake system operation.

Vehicle stability management (VSM)

This system provides further enhancements to vehicle stability and steering responses when a vehicle is driving on a slippery road or a vehicle detected changes in coefficient of friction between right wheels and left wheels when braking.

VSM operation

When the VSM is operating:

- ESC (Electronic Stability Control) ( ) light will blink.
- The steering wheel may be controlled.

When the vehicle stability management is operating properly, you can feel a slight pulsation in the vehicle. This is only the effect of brake control and indicates nothing unusual.

The VSM does not operate when:

- Driving on bank road such as gradient or incline
- Driving rearward
- ESC OFF indicator light ( ) remains on the instrument cluster
- EPS (Electronic Power Steering) indicator light remains on the instrument cluster

VSM operation off

If you press the ESC OFF button to turn off the ESC, the VSM will also cancel and the ESC OFF indicator light ( ) illuminates.
To turn on the VSM, press the button again. The ESC OFF indicator light goes out.

Malfunction indicator

The VSM can be deactivated even if you don't cancel the VSM operation by pressing the ESC OFF button. It indicates that a malfunction has been detected somewhere in the EPS (Electronic Power Steering) system or VSM system. If the ESC indicator light ( ) or EPS warning light remains on, have the system checked by a professional workshop. Kia recommends to visit an authorized Kia dealer/service partner.

✻ NOTICE

- The VSM is designed to function above approximately 22 km/h (13 mph) on curves.
- The VSM is designed to function above approximately 10 km/h (6 mph) when a vehicle is braking on a split-mu road. The split-mu road is made of surfaces which have different friction forces.

⚠ WARNING

- **The Vehicle Stability Management system is not a substitute for safe driving practices but a supplementary function only. It is the responsibility of the driver to always check the speed and the distance to the vehicle ahead. Always hold the steering wheel firmly while driving.**

(Continued)

(Continued)

- **Your vehicle is designed to activate according to the driver's intention, even with the VSM installed. Always follow all the normal precautions for driving at safe speeds for the conditions – including driving in inclement weather and on a slippery road.**
- **Driving with varying tire or wheel sizes may cause the VSM system to malfunction. When replacing tires, make sure they are the same size as your original tires.**

Hill-start assist control (HAC) (if equipped)

A vehicle has the tendency to slip back on a steep hill when it starts to go after stopping. The Hill-start Assist Control (HAC) prevents the vehicle from slipping back by operating the brakes automatically for about 1~2 seconds. The brakes are released when the accelerator pedal is depressed or after about 1~2 seconds.

⚠ WARNING

The HAC is activated only for about 1~2 seconds, so when the vehicle is starting off always depress the accelerator pedal.

✻ NOTICE

- The HAC does not operate when the transaxle shift lever is in the P (Park) or N (Neutral) position.
- The HAC activates even though the ESC is off but it does not activate when the ESC has malfunctioned.

Emergency Stop Signal (ESS) (if equipped)

The Emergency Stop Signal system alerts the driver behind by blinking the stop light when the vehicle is braked rapidly and severely.
The system is activated when:

- The vehicle suddenly stops (vehicle speed is over 55 km/h and the vehicle deceleration at greater than 7 m/s^2).
- The ABS is activating.

When the vehicle speed is under 40 km/h and the ABS deactivates or the sudden stop situation is over, the stop light blinking will stop. Instead, the hazard warning flasher will turn on automatically.
The hazard warning flasher will turn off when vehicle speed is over 10 km/h after the vehicle has stopped. Also, it will turn off when the vehicle is driven at low speed for some time. You can turn it off manually by pushing the hazard warning flasher switch.

⚠ CAUTION

The Emergency Stop Signal (ESS) system will not work if the hazard warning flasher is already on.

Good braking practices

⚠ WARNING

- **Whenever you leave or park your vehicle, always set the parking brake as far as possible and fully engage the vehicle's transaxle into the P (Park) position. If the parking brake is not fully engaged, the vehicle may move inadvertently and injure yourself and others.**
- **All vehicles should always have the parking brake fully engaged when parking to avoid inadvertent movement of the vehicle which can injure occupants or pedestrians.**

- Check to be sure the parking brake is not engaged and that the parking brake indicator light is out before driving away.
- Driving through water may get the brakes wet. They can also get wet when the vehicle is washed. Wet brakes can be dangerous! Your vehicle will not stop as quickly if the brakes are wet. Wet brakes may cause the vehicle to pull to one side.
  To dry the brakes, apply the brakes lightly until the braking action returns to normal, taking care to keep the vehicle under control at all times. If the braking action does not return to normal, stop as soon as it is safe to do so and have your vehicle inspected by a professional workshop.
  Kia recommends to call an authorized Kia dealer/service partner.
- Do not coast down hills with the vehicle out of gear. This is extremely hazardous. Keep the vehicle in gear at all times, use the brakes to slow down, then shift to a lower gear so that engine braking will help you maintain a safe speed.
- Do not "ride" the brake pedal. Resting your foot on the brake pedal while driving can be dangerous because it can result in the brakes overheating and losing their effectiveness. It also increases the wear of the brake components.
- If a tire goes flat while you are driving, apply the brakes gently and keep the vehicle pointed straight ahead while you slow down. When you are moving slowly enough for it to be safe to do so, pull off the road and stop in a safe place.
- If your vehicle is equipped with an Automatic Transaxle, do not let your vehicle creep forward. To avoid creeping forward, keep your foot firmly on the brake pedal when the vehicle is stopped.
- Be cautious when parking on a hill. Firmly engage the parking brake and place the shift lever in P (automatic transaxle) . If your vehicle is facing downhill, turn the front wheels into the curb to help keep the vehicle from rolling.
  If your vehicle is facing uphill, turn the front wheels away from the curb to help keep the vehicle from rolling. If there is no curb or if it is required by other conditions to keep the vehicle from rolling, block the wheels.

- Under some conditions your parking brake can freeze in the engaged position. This is most likely to happen when there is an accumulation of snow or ice around or near the rear brakes or if the brakes are wet. If there is a risk that the parking brake may freeze, apply it only temporarily while you put the shift lever in P (Automatic Transaxle) and block the rear wheels so the vehicle cannot roll. Then release the parking brake.
- Do not hold the vehicle on the upgrade with the accelerator pedal. This can cause the transaxle to overheat. Always use the brake pedal or parking brake.

FORWARD COLLISION-AVOIDANCE ASSIST (FCA) SYSTEM (IF EQUIPPED)

The FCA system is designed to detect and monitor the vehicle ahead or detect a pedestrian (if equipped) in the roadway through radar signals and camera recognition to warn the driver that a collision is imminent, and if necessary, apply emergency braking.

⚠ WARNING

Take the following precautions when using the forward collision- avoidance assist (FCA):

- **This system is only a supplemental system and it is not intended to, nor does it replace the need for extreme care and attention of the driver. The sensing range and objects detectable by the sensors are limited. Pay attention to the road conditions at all times.**
- **NEVER drive too fast in accordance with the road conditions or while cornering.**
- **Always drive cautiously to prevent unexpected and sudden situations from occurring. FCA does not stop the vehicle completely and does not avoid collisions.**

System setting and activation

System setting

The driver can activate the FCA by placing the ignition switch to the ON position and by selecting 'User Settings', 'Driver Assistance', and 'forward collision-avoidance assist'. The FCA deactivates, when the driver cancels the system setting.



The warning light illuminates on the LCD display, when you cancel the FCA system.

The driver can monitor the FCA ON/OFF status on the LCD display. Also, the warning light illuminates when the ESC (Electronic Stability Control) is turned off (Traction & Stability control disabled.). When the warning light remains ON with the FCA activated, have the system checked by a professional workshop. Kia recommends to visit an authorized Kia dealer/service partner.

The driver can select the initial warning activation time in the User Settings in the instrument cluster LCD display. The options for the initial Forward Collision Warning include the following:

- EARLY - When this condition is selected, the initial Forward Collision Warning is activated earlier than normal. This setting maximizes the amount of distance between the vehicle or pedestrian ahead before the initial warning occurs. If the 'EARLY' condition feels too sensitive, change it into 'NORMAL'. When the vehicle ahead suddenly stops, the warning may seem to activate later even if the 'EARLY' condition was selected.
- NORMAL - When this condition is selected, the initial Forward Collision Warning is activated normally. This setting allows for a nominal amount of distance between the vehicle or pedestrian ahead before the initial warning occurs.
- LATE - When this condition is selected, the initial Forward Collision Warning is activated later than normal. This setting reduces the amount of distance be-

tween the vehicle or pedestrian ahead before the initial warning occurs. Select this condition only when traffic is light, and you are driving slowly.

Prerequisite for activation

The FCA gets ready to be activated, when the FCA is selected on the LCD display, and when the following prerequisites are satisfied.

- The ESC is ON.
- The driving speed is over 10 km/h. (However, FCA is activated within certain driving speed.)
- When recognizing the vehicle or the pedestrian in front. (However, FCA does not activate according to conditions in front and vehicle systems, but it notices only certain warnings.)

⚠ WARNING

- **The FCA automatically activates upon placing the ignition switch to the ON position. The driver can deactivate the FCA by canceling the system setting on the LCD display.**
- **The FCA automatically deactivates upon canceling the ESC. When the ESC is canceled, the FCA cannot be activated on the LCD display. The FCA warning light will illuminate, but it does not indicate a malfunction of the system.**
- **Set or cancel FCA with controlling switches on steering wheel after stopping the vehicle in the safe place for your safety.**

FCA warning message and system control

The FCA produces warning messages and warning alarms in accordance with the collision risk levels of followings like vehicle's sudden braking in front or lack of vehicle to vehicle distance or collision to pedestrians. Also, it controls the brakes in accordance with the collision risk levels.

Collision warning (1st warning)



- The warning message appears on the LCD display with the warning alarms.
- The FCA controls the brakes within certain limit to release shock from the collision.

Emergency braking (2nd warning)



- The warning message appears on the LCD display with the warning alarms.
- The FCA controls the brakes within certain limit to release shock from the collision.
  The FCA controls the maximum brakes just before the collision.

Brake operation

- In an urgent situation, the braking system enters into the ready status for prompt reaction against the driver's depressing the brake pedal.
- The FCA provides additional braking power for optimum braking performance, when the driver depresses the brake pedal.
- The braking control is automatically deactivated, when the driver sharply depresses the accelerator pedal, or when the driver abruptly operates the steering wheel.
- The braking control is automatically canceled, when risk factors disappear.

⚠ CAUTION

The driver should always pay great caution to vehicle operation, even though there is no warning message or warning alarm.

⚠ WARNING

The FCA cannot avoid all collisions. The FCA might not completely stop the vehicle before collision, due to ambient, weather and road conditions. The driver has the responsibility to drive safely and control the vehicle.

⚠ WARNING

The FCA operates in accordance with the risk levels, such as the distance from the vehicle/passer- by in front, the speed of the vehicle/passer-by in front, and the driver's vehicle operation.
For the system to activate, do not attempt risky driving.

FCA front radar / camera sensor


OCK057023L

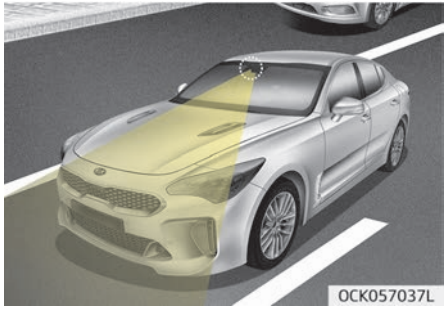
OCK057037L

In order for the FCA system to operate properly, always make sure the sensor or sensor cover is clean and free of dirt, snow, and debris. Dirt, snow, or foreign substances on the lens may adversely affect the sensing performance of the sensor.

✻ NOTICE

- Do not install any accessories, such as license plate molding or sticker, on the sensor area. Nor arbitrarily replace the bumper. Those may adversely affect the sensing performance.
- Always keep the sensor/bumper area clean.
- Use only soft clothes to wash the vehicle. Also, do not spray highly-pressurized water on the sensor installed on the bumper.

(Continued)

(Continued)

- Be careful not to apply unnecessary force on the frontal sensor area. When the sensor moves out of the correct position due to external force, the system may not normally operate even without the warning light or message. In this case, have the vehicle inspected by a professional workshop. Kia recommends to visit an authorized Kia dealer/service partner.
- Use only the genuine Kia sensor cover. Do not arbitrarily apply paint on the sensor cover.
- Do not tint the window or install stickers, accessories around the inside mirror where the camera is installed.
- Make sure the frontal camera installation point does not get wet.
- Do not impact or arbitrarily remove any radar/camera components.

(Continued)

(Continued)

- Do not place reflective objects(white paper or mirror etc.) on the crash pad.
  The system may activate unnecessarily due to reflect of the sunlight.
- Excessive audio volume may disturb the sound of the system warning alarm.

Warning message and warning light

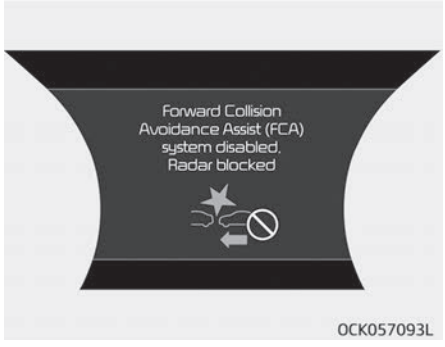

When the sensor cover or the sensor lens is smudged with the foreign substances, such as snow or rain, the FCA operation may temporarily stop. In this case, the warning message appears to warn the driver.
This is not a malfunction with the FCA. To operate the FCA again, remove the foreign substances.
Remove any dirt, snow, or debris and clean the radar sensor cover before operating the FCA system.
The FCA may not properly operate in an area (e.g. open terrain), where any substances are not detected after turning ON the engine.

System malfunction



- When the FCA is not working properly, the FCA warning light ( ) will illuminate and the warning message will appear for a few seconds. After the message disappears, the master warning light ( ) will illuminate. In this case, have the vehicle inspected by a professional workshop. Kia recommends to visit an authorized Kia dealer/service partner.
- The FCA warning message may appear along with the illumination of the ESC warning light.

⚠ WARNING

- **The FCA is only a supplemental system for the driver's convenience. The driver should hold the responsibility to control the vehicle operation. Do not solely depend on the FCA system. Rather, maintain a safe braking distance, and, if necessary, depress the brake pedal to lower the driving speed.**
- **The FCA may unnecessarily produce the warning message and the warning alarms. Also, due to the sensing limitation, the FCA may not produce the warning message and the warning alarm at all.**
- **When there is a malfunction with the FCA, the braking control does not operate upon detecting a collision risk even with other braking systems normally operating.**
- **The FCA operates only for the vehicle / pedestrian in front, while driving forward. It does not operate for any animals or vehicles in the opposite direction.**

(Continued)

(Continued)

- **The FCA does not recognize the vehicle, which horizontally drives across the crossroad, or the vehicle, which is parked in the horizontal direction.**
- **If the vehicle in front stops suddenly, you may have less control of the brake system. Therefore, always keep safe distance between your vehicle and the vehicle in front of you.**
- **The FCA system may activate during braking and the vehicle may stop suddenly. And the load in the vehicle may endanger passengers. Therefore, always be mindful of the load volume in the vehicle.**
- **The FCA system may not activate if the driver applies the brake pedal to avoid risk of collision.**
- **The FCA system does not operate when the vehicle is in reverse. In these cases, you must maintain a safe braking distance, and if necessary, depress the brake pedal to reduce the driving speed in order to maintain a safe distance.**

(Continued)

(Continued)

- **The regular braking function will operate normally even if There is a problem with the FCA brake control system or other functions. In this case, the braking control will not operate in the risk of a collision.**
- **The FCA system may not activate according to driving condition, traffic on the road, weather, road condition, etc.**
- **The FCA system may not activate to all types of vehicles.**

Limitation of the system

The FCA is an assistant system for a driver in a certain risky driving condition and it does not take every responsibility for all risks from driving condition.
The FCA monitors the driving situations through the radar and the camera sensor. Thus, for a situation out of the sensing range, the FCA may not normally operate. The driver should pay great caution in the following situations. The FCA operation may be limited.

Recognizing vehicles

The sensor may be limited when:

- The radar or the camera is contaminated with foreign substances.
- It heavily rains or snows.
- There is interruption by electric waves.
- There is severe irregular reflection from the radar.
- The vehicle in front has a narrow body. (i.e. motor cycle and bicycle)
- The driver's view is unclear due to the backlight, the reflected light, or darkness.
- The camera cannot contain the full image of the vehicle in front.
- The vehicle in front is a special vehicle, such as a heavily-loaded truck or a trailer.
- The outside brightness is greatly changed, such as entering/exiting the tunnel.
- The vehicle driving is unstable.
- The radar/camera sensor recognition is limited.
- The driver's field of view is not well illuminated (either too dark or too much reflection or too much backlight that obscures the field of view)
- There is severe irregular reflection from the radar sensor
- The vehicle in front is driving erratically
- The vehicle is driven near areas containing metal substances such as a construction zone, railroad, etc.
- Backlight is reflected in the direction of the vehicle (including front light from the vehicle ahead)
- Moisture on the windshield is not completely removed or frozen.
- The weather is misty.
- The vehicle in front does not turn ON the rear lights, does not have rear lights, has asymmetric rear lights, or has rear lights out of angle.

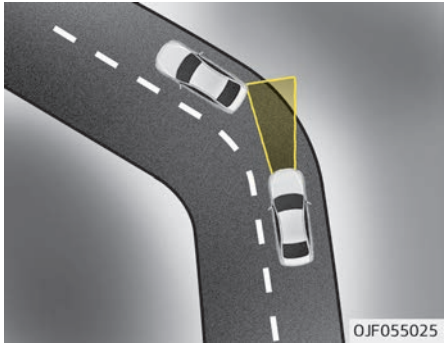

- Driving on a curve
  The FCA performance decreases while driving on a curve. The FCA may not recognize the vehicle in front even in the same lane. It may unnecessarily produce the warning message and the warning alarm, or it may not produce the warning message and the warning alarm at all.
  While driving on a curve, pay great caution, and, if necessary, depress the brake pedal.



While driving on a curve, the FCA may recognize the vehicle in front in the next lane. Pay great caution, and, if necessary, depress the brake pedal.
Or, depress the accelerator pedal to maintain the driving speed. Always, take a look around the vehicle for your safety.

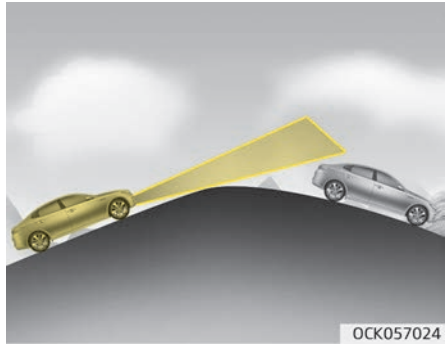

- Driving on a slope
  The FCA performance decreases while driving upward or downward on a slope, not recognizing the vehicle in front in the same lane. It may unnecessarily produce the warning message and the warning alarm, or it may not produce the warning message and the warning alarm at all.
  When the FCA suddenly recognizes the vehicle in front while passing over a slope, you may experience sharp deceleration.
  Always keep your eyes forward while driving upward or downward on a slope, and, if necessary, depress the brake pedal.

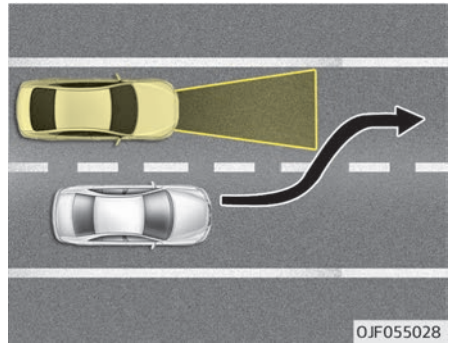

- Changing lanes
  Even though the vehicle in the next lane enters into your lane, it may not be recognized by the FCA, until it enters the FCA sensing range.
  Especially when the vehicle in the next lane abruptly enters into your lane, it is more likely not be recognized. Always pay great attention.

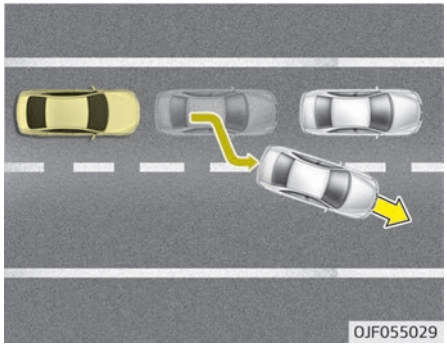

When the stopped vehicle in front gets out of the lane, it may not be recognized by your FCA. Always pay great attention.

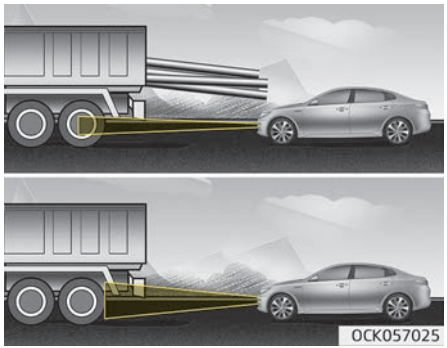

- Recognizing the vehicle
  When the vehicle in front has heavy loading extended rearward, or when the vehicle in front has higher ground clearance, it may induce a hazardous situation.

Recognizing pedestrians

The sensor may be limited when:

- The pedestrian is not fully captured by the camera sensor, or the pedestrian does not walk in the upright position.
- The pedestrian moves very fast.
- The pedestrian abruptly appears in front.
- The pedestrian wears clothes in the color similar to the background.
- The outside is too bright or too dark.
- The vehicle drives at night or in the darkness.
- There is an item similar to a person's body structure.
- The pedestrian is small.
- The pedestrian has impaired mobility.
- It is difficult to distinguish the pedestrian from the surroundings.
- The sensor recognition is limited.
- There is a group of pedestrians.

⚠ WARNING

- **Cancel the FCA in the User Settings on the LCD display, before towing another vehicle. While towing, the brake application may adversely affect your vehicle safety.**
- **Pay great caution to the vehicle in front, when it has heavy loading extended rearward, or when it has higher ground clearance.**
- **The FCA system is designed to detect and monitor the vehicle ahead or detect a pedestrian in the roadway through radar signals and camera recognition. It is not designed to detect bicycles, motorcycles, or smaller wheeled objects such as luggage bags, shopping carts, or strollers.**
- **The FCA does not operate in a certain situation. Thus, never test-operate the FCA against a person or an object. It may cause a severe injury or even death.**

(Continued)

(Continued)

- **When replacing or reinstalling the windshield, front bumper or radar/ camera after removal, have the vehicle inspected by a professional workshop. Kia recommends to visit an authorized Kia dealer/service partner.**

✻ NOTICE

The system may temporarily cancel due to the strong electric waves.

CRUISE CONTROL SYSTEM (IF EQUIPPED)



1. Cruise indicator

– Cruise set speed will be displayed beside the cruise indicator.

The cruise control system allows you to program the vehicle to maintain a constant speed without pressing the accelerator pedal.
This system is designed to function above approximately 30 km/h (20 mph).

⚠ WARNING

- **If the cruise control is left on, (cruise indicator light is illuminated), the cruise control can be switched on accidentally. Keep the cruise control system off when the cruise control is not in use, to avoid inadvertently setting a speed.**
- **Use the cruise control system only when traveling on open highways in good weather.**
- **Do not use the cruise control when it may not be safe to keep the vehicle at a constant speed, for instance, driving in heavy or varying traffic, or on slippery (rainy, icy or snow-covered) or winding roads or over 6% up-hill or down-hill roads.**
- **Pay particular attention to the driving conditions whenever using the cruise control system.**
- **Be careful when driving downhill using the cruise control system, which may increase the vehicle speed.**

✻ NOTICE

- During normal cruise control operation, when the SET switch is activated or reactivated after applying the brakes, the cruise control will energize after approximately 3 seconds. This delay is normal.
- To activate cruise control, depress the brake pedal at least once after turning the ignition switch to the ON position or starting the engine. This is to check if the brake switch which is important part to cancel cruise control is in normal condition.

Cruise control switch

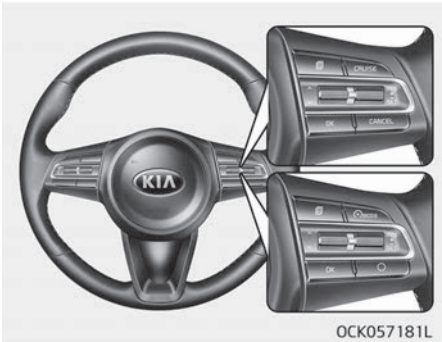

CANCEL/O : Cancels cruise control operation.
CRUISE/MODE: Turns cruise control system on or off.
RES+ : Resumes or increases cruise control speed.
SET- : Sets or decreases cruise control speed.

✻ NOTICE

First, switch the mode to Smart Cruise Control by pressing the MODE button if equipped with the Speed Limit Control System.
The mode changes, as below, whenever the MODE button is pressed.

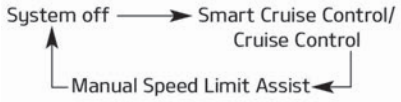

To set cruise control speed:

■ Type A

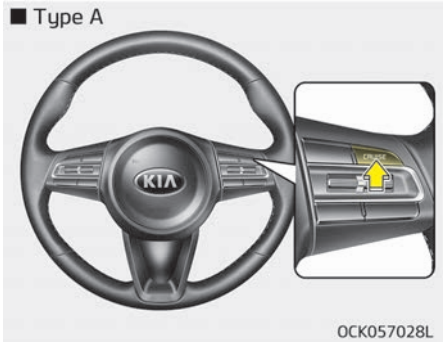

■ Type B

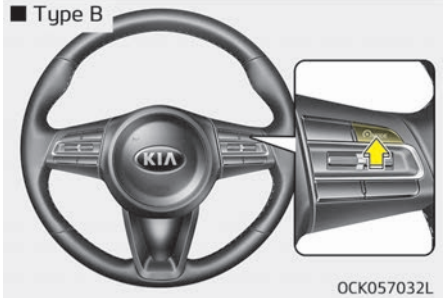

1. Press the CRUISE/MODE button on the steering wheel, to turn the system on. The cruise indicator light will illuminate.

2. Accelerate to the desired speed, which must be more than approximately 30 km/h (20 mph).

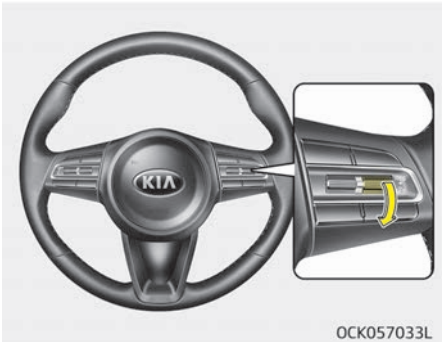

3. Move the lever down (to SET-), and release it at the desired speed. The set speed on the LCD screen will illuminate. Release the accelerator pedal at the same time. The desired speed will automatically be maintained.

On a steep grade, the vehicle may slow down or speed up slightly while going downhill.

To increase cruise control set speed:

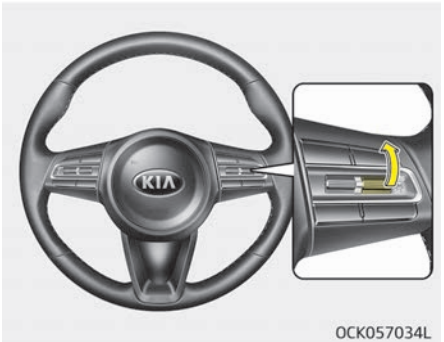

Follow either of these procedures:

- Move the lever up (to RES+) and hold it. Your vehicle set speed will increase by 10 km/h (5 mph). Release the lever at the speed you want.
- Move the lever up (to RES+) and release it immediately. The cruising speed will increase by 1 km/h (1 mph) each time you move the lever up (to RES+) in this manner.

To decrease the cruising speed:

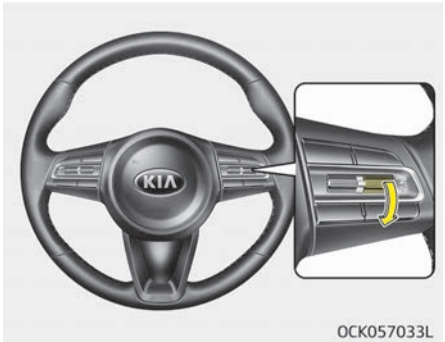

Follow either of these procedures:

- Move the lever down (to SET-) and hold it. Your vehicle set speed will decrease by 10 km/h (5 mph). Release the lever at the speed you want to maintain.
- Move the lever down (to SET-) and release it immediately. The cruising speed will decrease by 1 km/h (1 mph) each time you move the lever down (to SET-) in this manner.

To temporarily accelerate with the cruise control on:

If you want to speed up temporarily when the cruise control is on, depress the accelerator pedal. Increased speed will not interfere with cruise control operation or change the set speed.
To return to the set speed, take your foot off the accelerator pedal.

To cancel cruise control do one of the following:

■ Type A

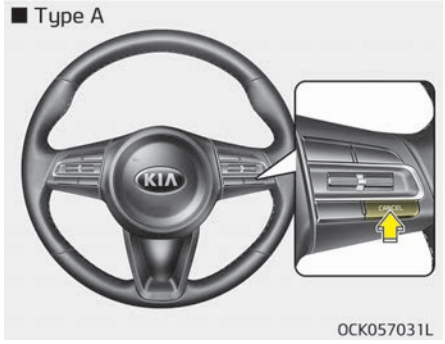

■ Type B

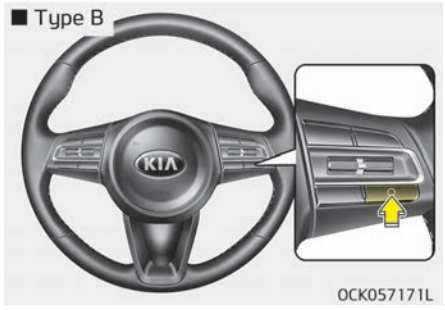

- Depress the brake pedal.
- Shift into N (Neutral) if equipped with an Automatic Transaxle.
- Press the CANCEL/O button located on the steering wheel.
- Decrease the vehicle speed lower than the memory speed by approximately 20 km/h (12 mph).
- Decrease the vehicle speed to less than approximately 25 km/h (15 mph).

Each of these actions will cancel cruise control operation (the cruise set indicator light will go off), but it will not turn the system off. If you wish to resume cruise control operation, move up the lever (to RES+) located on your steering wheel. You will return to your previously preset speed.

To resume cruising speed at more than approximately 30 km/h (20 mph)

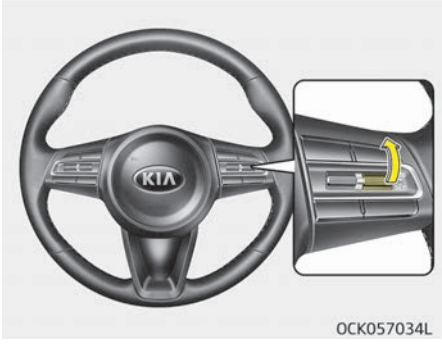

If any method other than the CRUISE / MODE button was used to cancel cruising speed and the system is still activated, the most recent set speed will automatically resume when the RES+ switch is pushed.
It will not resume, however, if the vehicle speed has dropped below approximately 30 km/h (20 mph).

To turn cruise control off do one of the following:

- Press the CRUISE/MODE button (the cruise indicator light will be turn off).
- If your vehicle equipped the speed limit system, press the CRUISE/MODE button twice. (The cruise indicator light will be turn off.)
- Turn the ignition off.

Both of these actions cancel cruise control operation. If you want to resume cruise control operation, repeat the steps provided in “To set cruise control speed” on page 5-71.

MANUAL SPEED LIMIT ASSIST (IF EQUIPPED)

You can set the speed limit when you do not want to drive over a specific speed.
If you drive over the preset speed limit, the warning system operates (set speed limit will blink and chime will sound) until the vehicle speed returns within the speed limit.

✻ NOTICE

While Manual Speed Limit Assist is in operation, the cruise control system cannot be activated.

✻ NOTICE

First, switch the mode to Smart Cruise Control by pressing the MODE button if equipped with the Speed Limit Control System.
The mode changes, as below, whenever the MODE button is pressed.

(Continued)

(Continued)

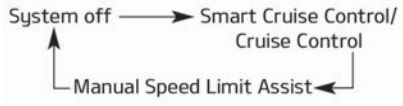

To set speed limit:

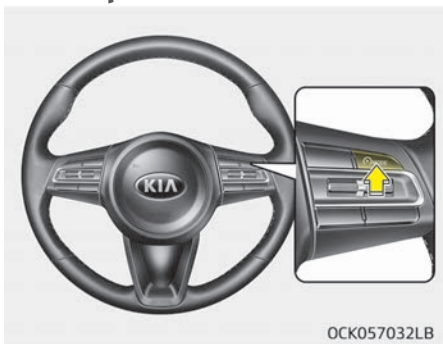

1. Press the cruise (MODE) button twice on the steering wheel, to turn the system on.

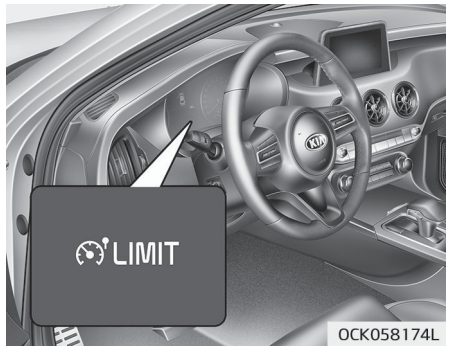

The speed limit indicator light will illuminate.

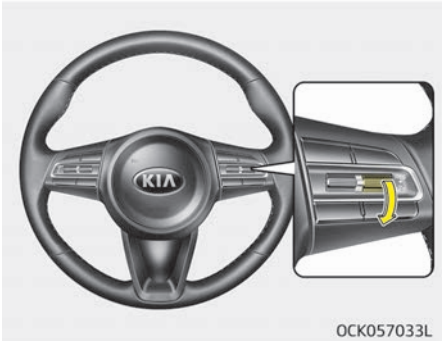

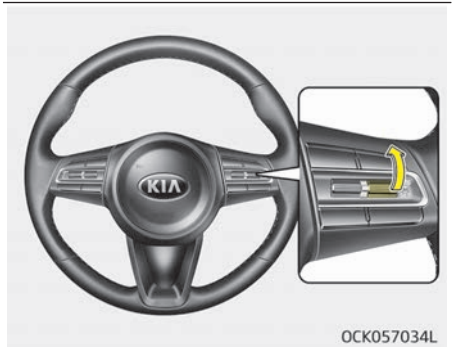

2. Move the lever down (to SET-).

3. Move the lever up (to RES+) or down (to SET-), and release it at the desired speed. Move the lever up (to RES+) or down (to SET-) and hold it. The speed will increase or decrease by 10 km/h (5 mph).

Move the lever up (to RES+) or down (SET-) and release it immediately. The speed will increase or decrease by 1 km/h.
The set speed limit will display on the instrument cluster.

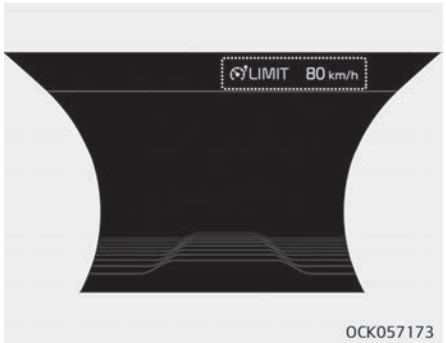

The set speed limit will be displayed.

To drive over the preset speed limit you must depress hard on the accelerator pedal (more than approximately 80%) until the kick down mechanism works with a clicking noise. Then the set speed limit will blink and chime will sound until you return the vehicle speed within the speed limit.

✻ NOTICE

- Depressing the accelerator pedal less than approximately 50%, the vehicle will not speed over the preset speed limit but maintain the vehicle speed within the speed limit.
- A clicking noise heard from the kick down mechanism by depressing the accelerator pedal fully is a normal condition.

To turn off the Manual Speed Limit Assist, do one of the following:

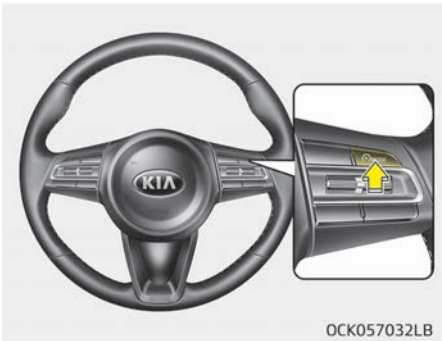

- Press the cruise switch.
- Turn the ignition off.

If you press the cancel O switch once, the set speed limit will cancel, but it will not turn the system off. If you wish to reset the speed limit, move the lever up (to RES+) or down (to SET-) to the desired speed.

⚠ CAUTION

The "---" indicator will blink if there is a problem with Manual Speed Limit Assist system.
If this occurs, have the system checked by a professional workshop. Kia recommends to visit an authorized Kia dealer/service partner.

INTELLIGENT SPEED LIMIT WARNING (IF EQUIPPED)

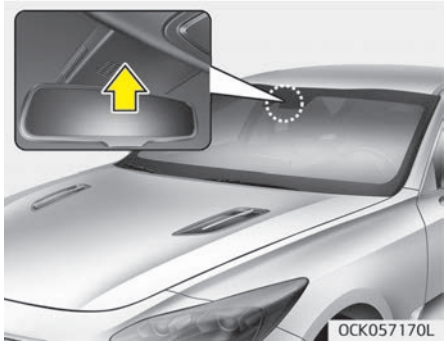

The system displays the information of speed limit and no passing restriction to the driver in both the instrument cluster and navigation screen. Intelligent Speed Limit Warning detects traffic signs with camera system attached on the top of the windscreen.
The Intelligent Speed Limit Warning also utilizes the navigation information to display the speed limit information.

⚠ WARNING

- **Intelligent Speed Limit Warning is only an aid and is not always able to correctly display speed limits and overtaking restrictions.**
- **The driver always keeps the responsibility not to exceed the maximum allowed speed.**
- **Do not place any accessories, stickers or tint the windshield near the rearview mirror.**
- **The system detects traffic signs and displays speed limit information by a camera therefore, if traffic signs are hard to detect, the system may not work properly. Please refer to "Driver's attention" on page 5-80.**
- **Do not remove any LKA parts or apply impact.**
- **Do not place objects on the dashboard that reflects light such as mirrors, white paper, etc. The system may malfunction if the sunlight is reflected.**
- **The system is not available in all countries.**

Intelligent speed limit warning activation/deactivation

- Intelligent Speed Limit Warning Setting method :
  Cluster User Settings ➡ Driver Assistance ➡ Intelligent Speed Limit Warning
- The information of speed limit and no passing restriction will appear on the cluster using a symbol if you have activated Intelligent Speed Limit Warning in User Settings of cluster.
- If Intelligent Speed Limit Warning is activated in navigation setting, the information also displayed in navigation screen.

Operation

- If a traffic sign that is relevant to your vehicle is passed, the system displays the information of the speed limits and no passing restrictions to the driver.
- When the driver turn on the ignition, the system displays stored information of the speed limit before turn off the ignition.

- Sometimes different speed limits are displayed for the same road. The information displayed depending on the situation. Because, traffic signs with additional sign (e.g rainy, arrow...) are also detected and compared with vehicle interior data(e.g wiper operation, turn signal...).
- The system can update the speed limit information without visible speed limit signs in the following situations.
  - When you change your driving direction with right or left or U turning.
  - When vehicle changes roads. (e.g. from highway to country road...)
  - When you enter or exit into town or village.

✻ NOTICE

If speed limit value has the difference between cluster and navigation, check the speed unit setting in navigation.

Display

■ No reliable speed limit information



WUM-203

- If the system doesn't have a reliable speed limit information, the following symbol is displayed in both the instrument cluster and navigation screen.

■ No passing information



WUM-206/WUM-204

- If the system detect no passing sign, no passing is displayed in both the instrument cluster and navigation screen.

■ End of a speed limit



WUM-207/WUM-208

- After passing "end of speed limitation" sign Intelligent Speed Limit Warning provides information from navigation to inform driver of perhaps afterwards applicable speed limit.

■ Unlimited speed (only in Germany)



WUM-205

- For some areas on highways in Germany there's no speed limit applicable. In that case Intelligent Speed Limit Warning shows "end of limitation" traffic sign as long as you don't pass another speed limit sign.

Warning message

The message (“Speed Limit Warning system disabled. Camera blocked”) will appear when camera’s field of view is covered by some objects. The system stops until the field of view is normal.
Check the windshield around the camera view area.
If the system does not work normally even though camera’s field of view is cleared, have the system checked by a professional workshop. Kia recommends to visit an authorized Kia dealer/service partner.
When Intelligent Speed Limit Warning is not working properly, the warning message (“Check Speed Limit Warning system”) will come on for a few second. After the message disappears, the master warning light will illuminate.
In this case, have the system checked by a professional workshop.
Kia recommends to visit an authorized Kia dealer/service partner.

The system may not fully operate and provide correct information in the following situations.

- Traffic signs are positioned on sharp curve.
- Poorly positioned traffic sign. (eg. Rotated, shaded by any object, damaged...)
- Concealed traffic signs by other vehicle.
- Broken LED traffic signs.
- Poor weather like snow, rain, fog.
- Reflected glare around and/or on the traffic sign.
- There is insufficient illumination of the traffic signs in the night.
- There is bright lights around traffic signs.
- There is dirt, ice or frost on the windshield in the area of the camera.
- When camera field of view is covered by objects such as a sticker, paper, leaf fall.
- When driving very close to the vehicle in front of you.
- When navigation system has malfunction.
- When bus or trucks attached with a speed sticker are passing you.
- When you are at a certain location not covered by the navigation system.
- When the navigation system is not updated to the latest map version.

Driver's attention

The driver must be cautious in the below situations for the system may not assist the driver and may not work properly.

- Do not stick or attach anything to the windshield in front of the camera as this may reduce effectiveness or cause one more of the systems dependent on the camera to stop working.
- Keep the windshield in the area behind the interior rear view mirror clean.
- Do not place reflective materials, such as white paper or a mirror, on the instrument panel.
- Do not strike or damage the areas around the camera unit.
- Do not touch the camera lens or remove the screw located on the camera unit.

- The system does not work in all situations but is designed merely as a supplementary aid.
- The system assists the driver and does not replace the human eye.
- The driver always bears ultimate responsibility for ensuring that the vehicle is driven safely and that applicable road traffic rules and regulations are followed.

SMART CRUISE CONTROL WITH STOP & GO SYSTEM (IF EQUIPPED)

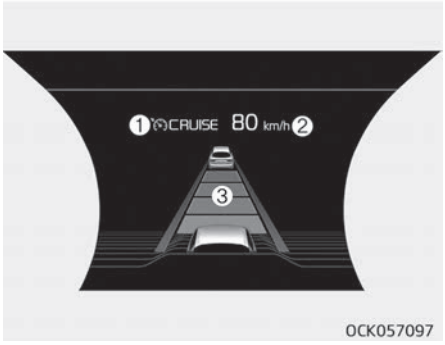

1. Cruise indicator
2. Set speed
3. Vehicle-to-vehicle distance

The smart cruise control system allows you to program the vehicle to maintain constant speed and distance detecting the vehicle ahead without depressing the accelerator or brake pedal.

⚠ WARNING

For your safety, please read the owner's manual before using the smart cruise control system.

✻ NOTICE

To activate smart cruise control, depress the brake pedal at least once after turning the ignition switch to the ON position or starting the engine. This is to check if the brake switch which is important part to cancel smart cruise control is in normal condition.

⚠ WARNING

- **If the smart cruise control is left on, (cruise indicator in the instrument cluster illuminated) the smart cruise control can be activated unintentionally. Keep the smart cruise control system off (cruise indicator turn off) when the smart cruise control is not used.**
- **Use the smart cruise control system only when traveling on open highways in good weather.**

(Continued)

(Continued)

- **Do not use the smart cruise control when it may not be safe to keep the car at a constant speed. For instance.**
  - **Highway interchange and tollgate**
  - **Road surrounded by abnormally multiple steel constructions (subway construction, steel tunnel, etc)**
  - **Parking lot**
  - **Lanes beside guard rail on a road**
  - **Slippery road with rain, ice, or snow covered**
  - **Abrupt curved road**
  - **Steep hills**
  - **Windy roads**
  - **Off roads**
  - **Rods under construction**
  - **Rumble strip**
  - **When driving near crash barriers**

(Continued)

(Continued)

- **When driving on a sharp curve**
- **When the vehicle sensing ability decreases due to vehicle modification resulting level difference of the vehicle's front and rear**
- **When driving in heavy traffic or when traffic conditions make it difficult to drive at a constant speed**
- **When driving on rainy, icy, or snow-covered roads**
- **When driving with limited view (possibly due to bad weather, such as fog, snow, rain or sandstorm)**

- **Pay particular attention to the driving conditions whenever using the smart cruise control system.**
- **The smart cruise control system is not a substitute for safe driving. It is the responsibility of the driver to always check the speed and distance of the vehicle ahead.**
- **Be careful when driving downhill using the SCC.**

(Continued)

(Continued)

- **Limited visibility (rain, snow, smog, etc.)**
- **Cruise function should not be used when the vehicle is being towed to prevent any damage.**
- **Always set the vehicle speed under the speed limit in your country.**
- **Unexpected situations may lead to possible accidents. Pay attention continuously to road conditions and driving even when the smart cruise control system is being operated.**

Smart cruise control switch

O : Cancels cruise control operation.

 : Turns cruise control system on or off.

RES+ : Resumes or increases cruise control speed.

SET- : Sets or decreases cruise control speed.

 : Sets vehicle-to-vehicle distance

✻ NOTICE

First, switch the mode to Smart Cruise Control by pressing the MODE button if equipped with the Speed Limit Control System.
The mode changes, as below, whenever the MODE button is pressed.

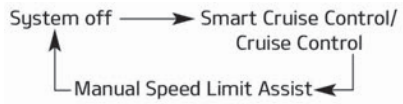

Smart cruise control speed

To set smart cruise control speed :

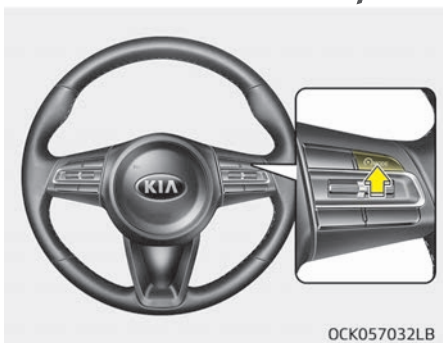

1. Press the CRUISE button, to turn the system on. The CRUISE indicator in the instrument cluster will illuminate.
2. Accelerate to the desired speed. The smart cruise control speed can be set as follows:
   - 30 km/h (20 mph) ~ 200 km/h (120 mph): when there is no vehicle in front
   - 0 km/h (0 mph) ~ 200 km/h (120 mph): when there is a vehicle in front

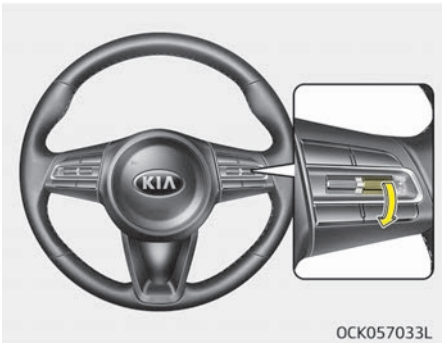

3. Move the lever down (to SET-), and release it at the desired speed. The set speed and vehicle to vehicle distance on the LCD screen will illuminate.
4. Release the accelerator pedal. The desired speed will automatically be maintained.

If there is a vehicle in front of you, the speed may decrease to maintain the distance to the vehicle ahead.
On a steep grade, the vehicle may slow down or speed up slightly while going uphill or downhill.
Vehicle speed may decrease on an upward slope and increase on a ownward slope.
The speed will be set to 30 km/h when there is a vehicle ahead and your vehicle speed is 0~30 km/h.

To increase cruise control set speed:

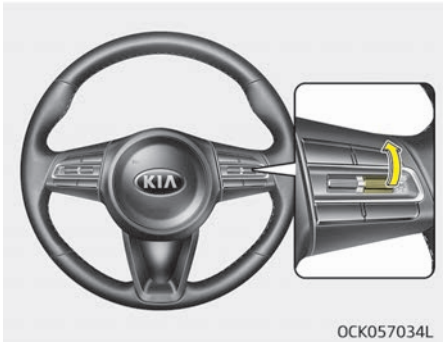

Follow either of these procedures:
- Move the lever up (to RES+), and hold it. Your vehicle set speed will increase by 10 km/h (5 mph). Release the lever at the speed you want.
- Move the lever up (to RES+), and release it immediately. The cruising speed will increase by 1.0 km/h (1.0 mph) each time you move the lever up (to RES+) in this manner.
- You can set the speed to 200 km/h (120 mph).

⚠ CAUTION

Check the driving condition before using the toggle switch. Driving speed sharply increases, when you push up and hold the toggle switch.

To decrease the cruise control set speed:

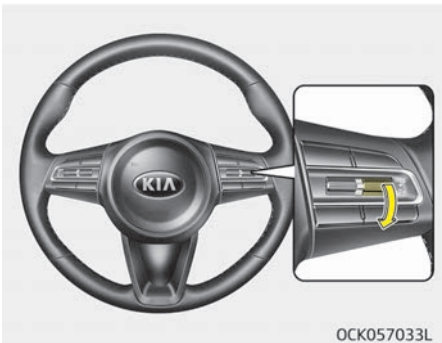

Follow either of these procedures:

- Move the lever down (to SET-), and hold it. Your vehicle set speed will decrease by 10 km/h (5 mph). Release the lever at the speed you want.
- Move the lever down (to SET-), and release it immediately. The cruising speed will decrease by 1.0 km/h (1.0 mph) each time you move the lever down (to SET-) in this manner.
- You can set the speed to 30 km/h (20 mph).

To temporarily accelerate with the cruise control on:

If you want to speed up temporarily when the cruise control is on, depress the accelerator pedal. Increased speed will not interfere with cruise control operation or change the set speed.
To return to the set speed, take your foot off the accelerator.
If you move the lever down (to SET-) at increased speed, the cruising speed will be set again.

✻ NOTICE

Be careful when accelerating temporarily, because the speed is not controlled automatically at this time even if there is a vehicle in front of you.

Smart cruise control will be temporarily canceled when:

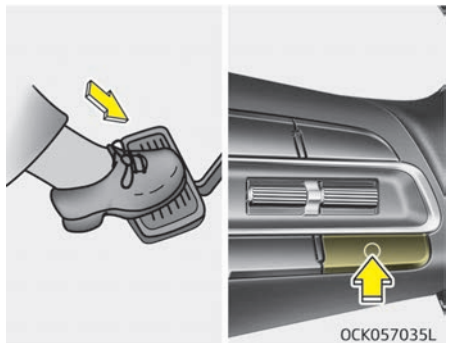

Cancelled manually

The smart cruise control is temporarily canceled when the brake pedal is depressed or the CANCEL button is pressed. Depress the brake pedal and press the CANCEL button at the same time, when the vehicle is at a standstill. The speed and vehicle to vehicle distance indicator on the cluster is disappeared and the CRUISE indicator is illuminated continuously.

Cancelled automatically

- The driver's door is opened.

- The shift lever is shifted to N (Neutral), R (Reverse) or P (Paking).
- The EPB (electronic parking brake) is applied.
- The vehicle speed is over 210 km/h (130 mph)
- The ESC, ABS or TCS is operating.
- The ESC is turned off.
- The sensor or the cover is dirty or blocked with foreign matter.
- When the vehicle is stopped for over 5 minutes.
- The driver starts driving by pushing the lever up (RES +) or down (SET -) or depressing the accelerator pedal approximately 3 seconds after the vehicle is stopped by the smart cruise control System with no other vehicle ahead or a vehicle stopped far away in front.
- The accelerator pedal is continuously depressed for long time.
- The engine speed is in dangerous range.
- The SCC system has malfunctioned.
- When activating the ISG mode.
- When the braking control is operated for Forward Collision-Avoidance Assist (FCA)
- The vehicle is stopped for more than 5 minutes.
- The driver starts driving by pushing the toggle switch up (RES+)/down (SET-) or depressing the accelerator pedal, after the vehicle is stopped by the Smart Cruise Control system with no other vehicle ahead.
- The vehicle stops and goes repeatedly for a long period of time.
- When the parking brake is locked.
- Engine has some problems.

Each of these actions will cancel the smart cruise control operation. (the set speed and vehicle to vehicle distance on the LCD display will go off.) In a condition the smart cruise control is cancelled automatically, the smart cruise control will not resume even though the RES+ or SET-lever is moved.

⚠ CAUTION

If the smart cruise control is cancelled by other than the reasons mentioned, have the system checked by a professional workshop. Kia recommends to visit an authorized Kia dealer/service partner.

⚠ CAUTION



OCK057098L

If the system is automatically cancelled, the warning chime will sound and a message will appear for a few seconds.

(Continued)

(Continued)

You must adjust the vehicle speed by depressing the accelerator or brake pedal according to the road condition ahead and driving condition.
Always check the road conditions. Do not rely on the warning chime.

To resume cruise control set speed:

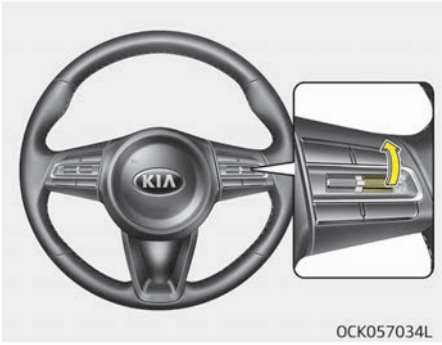

If any method other than the CRUISE button was used to cancel cruising speed and the system is still activated, the cruising speed will automatically resume when you move the lever up (to RES+).

If you move the lever up (to RES+), the speed will resume to the recently set speed. It will not resume if the vehicle speed has dropped below approximately 30 km/h (20 mph).

✻ NOTICE

To reduce the risk of an accident, always check the road conditions when reactivating the smart cruise control using the RES+ lever to ensure the road conditions permit safe use of the cruise control.

To turn cruise control off:

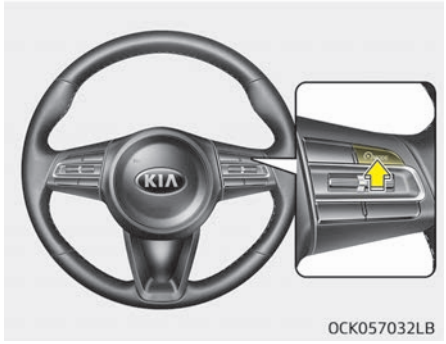

Press the CRUISE button. (the CRUISE indicator in the instrument cluster will go off).
When the Smart Cruise Control System is not needed, press the [CRUISE] switch and deactivate the system.

- Press the MODE button (The CRUISE indicator light will go off.). (if equipped with Speed Limit Control)
  - With the Smart Cruise Control on, pressing the button once will turn Off the Smart Cruise Control and turn on the Speed Limit Control.

- With the Smart Cruise Control off and Speed Limit Control on, pressing the button will turn off both system.

Vehicle to vehicle distance setting

To set vehicle to vehicle distance:

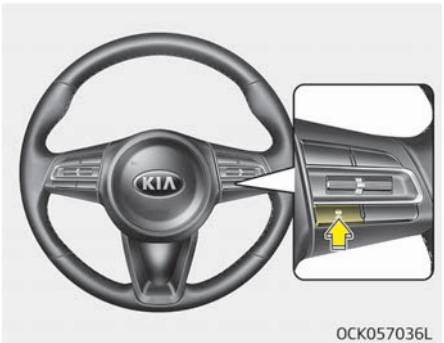

This function allows you to program the vehicle to maintain relative distance to the vehicle ahead without depressing the accelerator pedal or brake pedal.
The vehicle to vehicle distance will automatically activate when the smart cruise control system is on.

Select the appropriate distance according to road conditions and vehicle speed.
Each time the button is pressed, the vehicle to vehicle distance changes as follows:

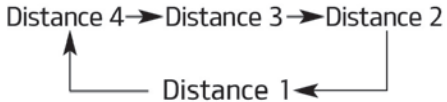

For example, if you drive at 90 km/h (56 mph), the distance maintain as follows:
Distance 4 - approximately 52.5 m
Distance 3 - approximately 40 m
Distance 2 - approximately 32.5 m
Distance 1 - approximately 25 m

✻ NOTICE

The distance is set to the last set distance when the system is used for the first time after starting the engine.

When the lane ahead is clear :

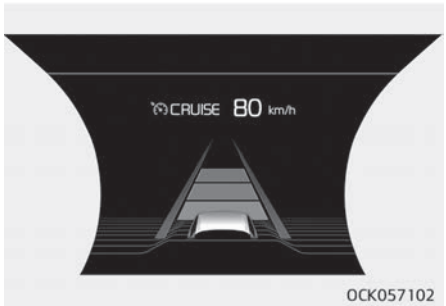

The vehicle speed will maintain the set speed.

When there is a vehicle ahead of you in your lane :

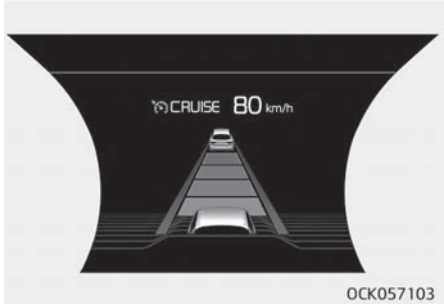

OCK057103

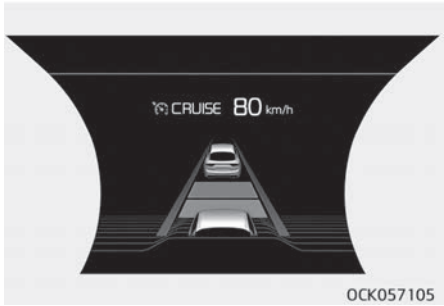

OCK057105

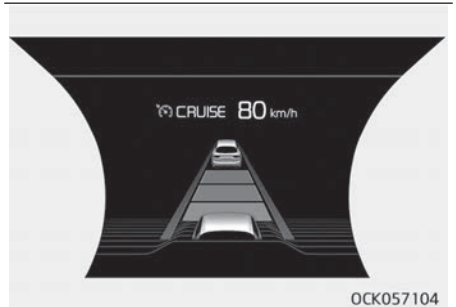

OCK057104

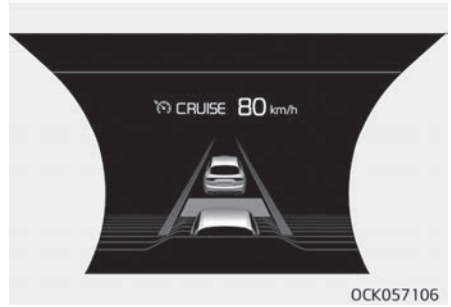

OCK057106

- The vehicle will maintain the set speed, when the lane ahead is clear.
- The vehicle will slow down or speed up to maintain the selected distance, when there is a vehicle ahead of you in the lane. (A vehicle will appear in front of your vehicle in the LCD display only when there is an actual vehicle in front of you)
- If the vehicle ahead speeds up, your vehicle will travel at a steady cruising speed after accelerating to the selected speed.

⚠ CAUTION

- **The warning chime sounds and LCD display blinks if it is hard to maintain the selected distance to the vehicle ahead.**
- **If the warning chime sounds, actively adjust the vehicle speed by depressing the brake pedal according to the road condition ahead and driving condition.**
- **Even if the warning chime is not activated, always pay attention to the driving conditions to prevent dangerous situations from occurring.**

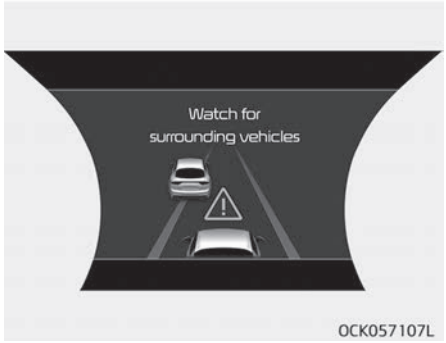

⚠ CAUTION

If the vehicle ahead (vehicle speed: less than 30 km/h) disappears to the next lane, the warning chime will sound and a message will appear. Adjust your vehicle speed for vehicles or objects that can suddenly appear in front of you by depressing the brake pedal according to the road condition ahead and driving condition.

In traffic situation

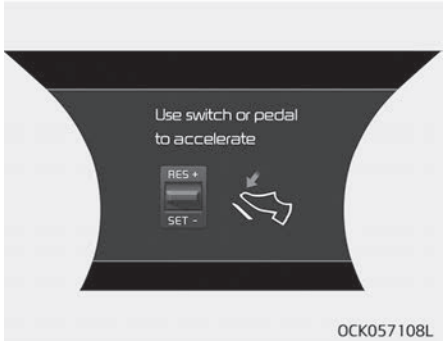

Use switch or pedal to accelerate

- In traffic, your vehicle will stop if the vehicle ahead of you stops. Also, if the vehicle ahead of you starts moving, your vehicle will start as well. However, if the vehicle stops for more than 3 seconds, you must depress the accelerator pedal or push up the toggle switch (RES+) to start driving.
- If you push the smart cruise control toggle switch (RES+ or SET-) while Auto Hold and smart cruise control is operating the Auto Hold will be released regardless of accelerator pedal operation and the vehicle will start to move. The AUTO HOLD indicator changes from green to white. (if equipped with EPB (Electronic Parking Brake))

Radar to detect distance to the vehicle ahead



The sensor detects the distance to the vehicle ahead.

If the sensor is covered with dirt or other foreign matter, the vehicle to vehicle distance control may not operate correctly.
Always keep the area in front of the sensor clean.

Warning message



When the sensor lens cover is blocked with dirt, snow, or debris, the Smart Cruise Control System operation may stop temporarily. If this occurs, a warning message will appear on the LCD display. Remove any dirt, snow, or debris and clean the radar sensor lens cover before operating the Smart Cruise Control System. The Smart Cruise Control system may not properly activate, if the radar is totally contaminated, or if any substance is not detected after turning ON the engine (e.g. in an open terrain).

SCC (Smart Cruise Control) malfunction message

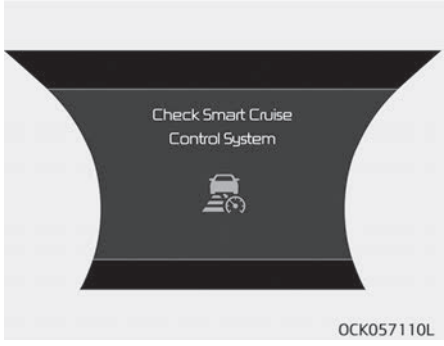

The message will appear when the vehicle to vehicle distance control system is not functioning normally.
In this case, have the system checked by a professional workshop. Kia recommends to visit an authorized Kia dealer/service partner.

⚠ CAUTION

- **Do not install accessories around the sensor and do not replace the bumper by yourself. It may interfere with the sensor performance.**
- **Always keep the sensor and bumper clean.**
- **To prevent sensor cover damage from occurring, wash the car with a soft cloth.**
- **Do not damage the sensor or sensor area by a strong impact. If the sensor moves slightly off position, the smart cruise control system will not operate correctly without any warning or indicator from the cluster. If this occurs, have the system checked by a professional workshop.**
  Kia recommends to visit an authorized Kia dealer/service partner.
- **Use only a genuine Kia sensor cover for your vehicle. Do not paint anything on the sensor cover.**

(Continued)

(Continued)

- **If the front bumper becomes damaged in the area around the radar sensor, the Smart Cruise Control System may not operate properly.**

To adjust the sensitivity of smart cruise control

The sensitivity of vehicle speed when following the front vehicle to maintain the set distance can be adjusted. Go to the User Settings Mode (Driver Assistance) and select SCC (smart cruise control). You may select one of the three stages you prefer.

- Slow:
  Vehicle speed following the front vehicle to maintain the set distance is slower than normal speed.
- Normal:
  Vehicle speed following the front vehicle to maintain the set distance is normal.
- Fast:
  Vehicle speed following the front vehicle to maintain the set distance is faster than normal speed.

✻ NOTICE

The last selected mode is remained In the system.

To convert to cruise control mode:

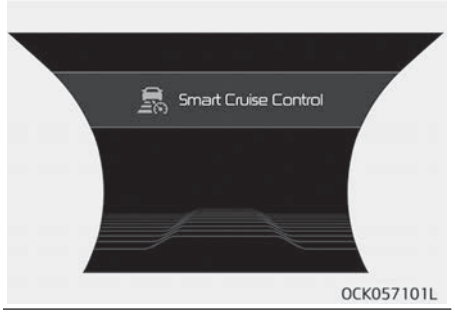

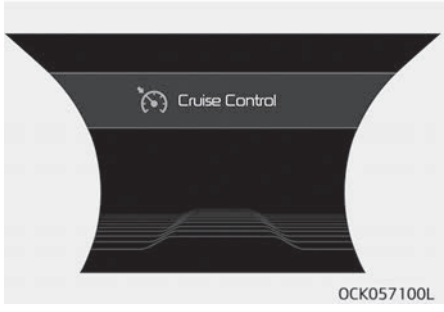

The driver may choose to only use the cruise control mode (speed control function) by doing as follows:

1. Turn the smart cruise control system on (the cruise indicator light will be on but the system will not be activated).
2. Push the distance to distance switch for more than 2 seconds.
3. Choose between "smart cruise control (SCC) mode" and "Cruise control (CC) mode".

When the system is canceled using the CRUISE button or the CRUISE button is used after the engine is turned on, the Smart Cruise Control mode will turn on.

⚠ WARNING

When using the cruise control mode, you must manually access the distance to other vehicles as the system will not automatically brake to slow down for other vehicles.

Limitations of the system

The smart cruise control system may have limits to its ability to detect distance to the vehicle ahead due to road and traffic conditions.

On curves

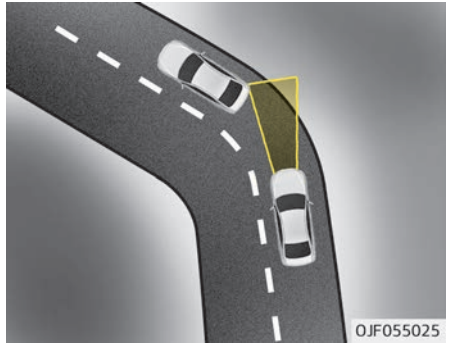

- On curves, the smart cruise control system may not detect a moving vehicle in your lane, and then your vehicle could accelerate to the set speed. Also, the vehicle speed will rapidly down when the vehicle ahead is recognized suddenly.
- Select the appropriate set speed on curves and adjust your vehicle speed by depressing the accelerator or brake pedal according to the road condition ahead and driving condition.



- Your vehicle speed can be reduced due to a vehicle in the adjacent lane. Adjust your vehicle speed by depressing the brake pedal according to the road condition ahead and driving condition. Apply the accelerator pedal and select the appropriate set speed. Check to be sure that the road conditions permit safe operation of the smart cruise control.

On inclines

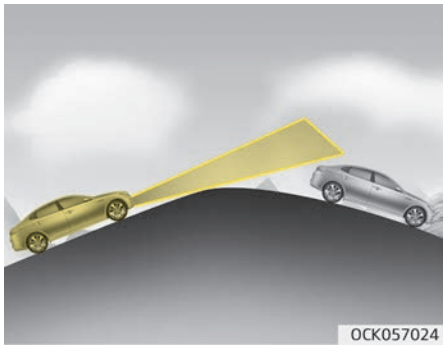

- During uphill or downhill driving, the smart cruise control system may not detect a moving vehicle in your lane, and cause your vehicle to accelerate to the set speed. Also, the vehicle speed will rapidly down when the vehicle ahead is recognized suddenly.

- Select the appropriate set speed on inclines and adjust your vehicle speed by depressing the accelerator or brake pedal according to the road condition ahead and driving condition.

Lane changing

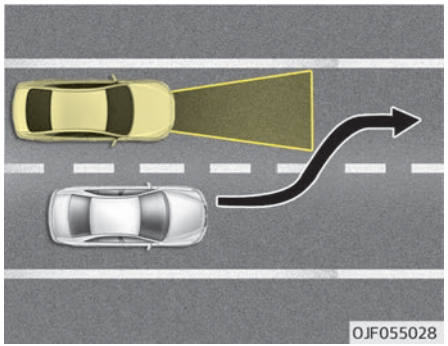

- A vehicle which moves into your lane from an adjacent lane cannot be recognized by the sensor until it is in the sensor's detection range.

- The sensor may not detect immediately when a vehicle cuts in suddenly. Always pay attention to the traffic, road and driving conditions.
- If a vehicle which moves into your lane is slower than your vehicle, your speed may decrease to maintain the distance to the vehicle ahead.
- If a vehicle which moves into your lane is faster than your vehicle, your vehicle will accelerate to the selected speed.

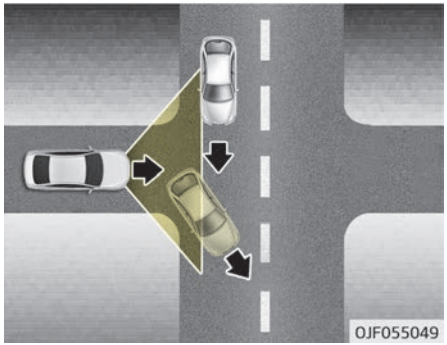

- Your vehicle may accelerate when a vehicle ahead of you disappears.
- When you are warned that the vehicle ahead of you is not detected, drive with caution.

Vehicle recognition

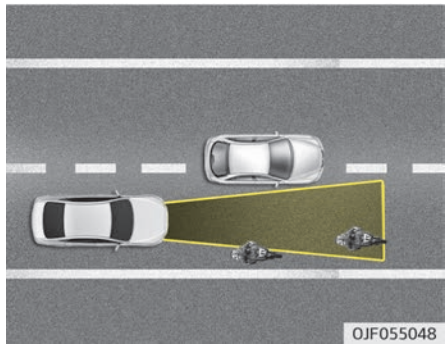

Some vehicles ahead in your lane cannot be recognized by the sensor as follows:

- Narrow vehicles such as motorcycles or bicycles
- Vehicles offset to one side
- Slow-moving vehicles or sudden decelerating vehicles
- Stopped vehicles
- Vehicles with small rear profile such as trailers with no loads

A vehicle ahead cannot be recognized correctly by the sensor if any of following occurs:

- When the vehicle is pointing upwards due to overloading in the trunk (tailgate)
- While making turns by steering
- When driving to one side of the lane
- When driving on narrow lanes or on curves

Adjust your vehicle speed by depressing the brake pedal according to the road condition ahead and driving condition.

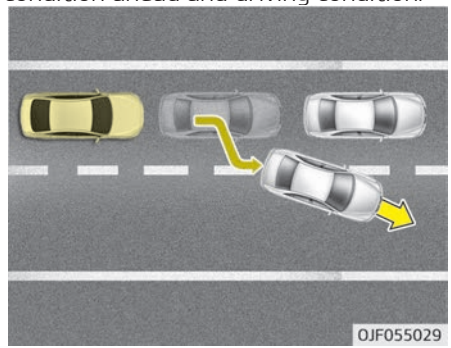

- When vehicles are at a standstill and the vehicle in front of you changes to the next lane, be careful when your vehicle starts to move because it may not recognize the stopped vehicle in front of you.

In this case, you must maintain a safe braking distance, and if necessary, depress the brake pedal to reduce your driving speed in order to maintain a safe distance.

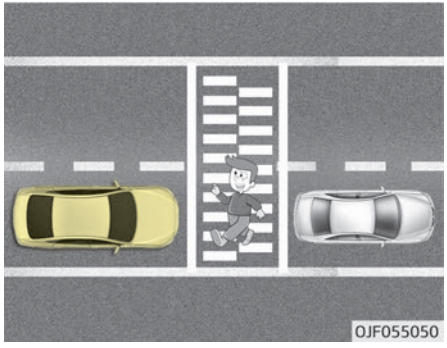

- Always look out for pedestrians when your vehicle is maintaining a distance with the vehicle ahead.

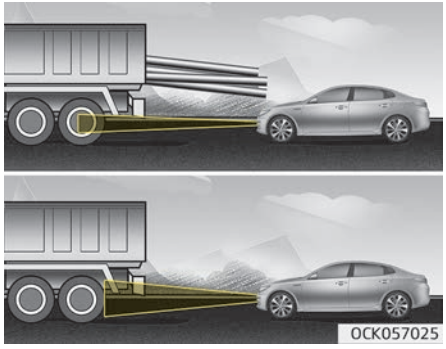

- Always be cautious for vehicles with higher height or vehicles carrying loads that sticks out to the back of the vehicle.

⚠ WARNING

- **The smart cruise control system cannot guarantee the stop for every emergency situation. If an emergency stop is necessary, you must apply the brakes.**

(Continued)

(Continued)

- **Keep a safe distance according to road conditions and vehicle speed. If the vehicle to vehicle distance is too close during a high-speed driving, a serious collision may result.**
- **The smart cruise control system cannot recognize a stopped vehicle, pedestrians or an oncoming vehicle. Always look ahead cautiously to prevent unexpected and sudden situations from occurring.**
- **SCC system may have difficulty in maintaining the correct distance or speed, if the vehicle is driving on a steep incline or towing a trailer.**
- **When other vehicles are changing lanes in front of you frequently, the smart cruise control system may not operate appropriately. Always look ahead cautiously to prevent unexpected and sudden situations from occurring.**

(Continued)

(Continued)

- The smart cruise control system is not a substitute for safe driving practices but a convenience function only. It is the responsibility of the driver to always check the speed and the distance to the vehicle ahead.
- Always be aware of the selected speed and vehicle to vehicle distance.
- Always maintain sufficient braking distance and decelerate your vehicle by applying the brakes if necessary.
- As the smart cruise control system may not recognize complex driving situations, always pay attention to driving conditions and control your vehicle speed.
- For safe operation, carefully read and follow the instructions in this manual before use.
- After an engine start, please stop for several seconds. If system initialization is not completed, the SCC does not normally operate.

(Continued)

(Continued)

- After an engine start, if any objects are not detected or the sensor cover is obscured with foreign substances, there is a possibility that the SCC system may not work.
- Below conditions are not allowed: over baggage loading in a trunk(tailgate), suspension remodeling, tire replacement with unauthorized tires or tires with different worn-out and pressure levels.

⚠ CAUTION

The smart cruise control system may not operate temporarily due to electrical interference.

ISG (IDLE STOP AND GO) SYSTEM (IF EQUIPPED)

Your vehicle may be equipped with the ISG system, which reduces fuel consumption by automatically shutting down the engine, when the vehicle is at a standstill. (For example: red light, stop sign and traffic jam)
The engine starts automatically as soon as the starting conditions are met.
The ISG system is ON whenever the engine is running.

✻ NOTICE

When the engine automatically starts by the ISG system, some warning lights (ABS, ESC, ESC OFF, EPS or Parking brake warning light) may turn on for a few seconds.
This happens because of low battery voltage. It does not mean the system has malfunctioned.

Auto stop

To stop the engine in idle stop mode

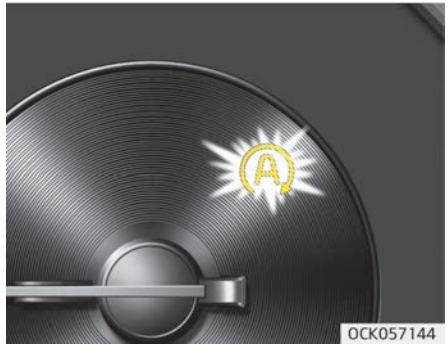

Stop the vehicle completely by pressing the brake pedal and the shift lever is in the D(Drive) or N(Neutral) position

The engine will stop and the green AUTO STOP (Ⓐ) indicator on the instrument cluster will illuminate.



✻ NOTICE

If you open the engine hood in auto stop mode, the following will happen:

- The ISG system will deactivate (the light on the ISG OFF button will illuminate).
- A message will appear on the LCD display.

(Continued)

(Continued)

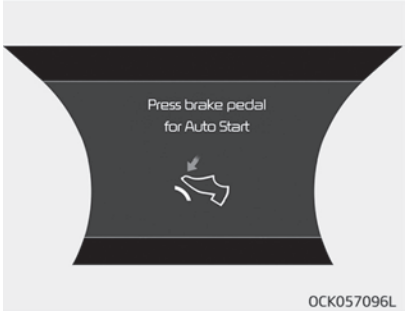

- If you move the transmission lever from N to D (manual mode) or R without depressing the brake pedal after stopping engine automatically, the engine does not restart automatically and warning chime alarms. When it happens, press brake pedal for auto start.

Auto start

To restart the engine from idle stop mode

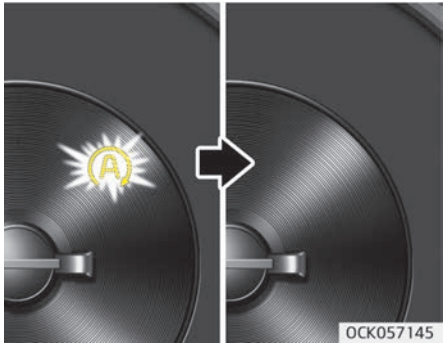

- Release the brake pedal.
  or
- Move the shift gear to the R (Reverse) position or the manual mode while depressing the brake pedal.

The engine will start and the green AUTO STOP indicator (Ⓐ) on the instrument cluster will go out.

The engine will also restart automatically without the driver's any actions if the following occurs:

- The fan speed of manual climate control system is set above the 3rd position when the air conditioning is on.
- The fan speed of automatic climate control system is set above the 6th position when the air conditioning is on.
- When a certain amount of time has passed with the climate control system on.
- When the defroster is on.
- The brake vacuum pressure is low.
- The battery charging status is low.
- The vehicle speed exceeds 1 km/h (1 mph).
- Engine is turned off by Auto Stop for a long time.
- If you unfasten the seat belt or open the driver's door while depressing the brake pedal.

Condition of ISG system operation

The ISG system will operate under the following conditions:

- The driver's seat belt is fastened.
- The driver's door and engine hood are closed.
- The brake vacuum pressure is adequate.
- The battery is sufficiently charged.
- The outside temperature is between -10 °C to 35 °C (14 °F to 95 °F).
- The engine coolant temperature is not too low.

✻ NOTICE

- If the ISG system does not meet the operation condition, the ISG system is deactivated. The light on the ISG OFF button will illuminate and a message "Auto Stop conditions not met" will appear on the LCD display.

(Continued)

(Continued)

- If the light or notice comes on continuously, please check the operation condition.

ISG system deactivation

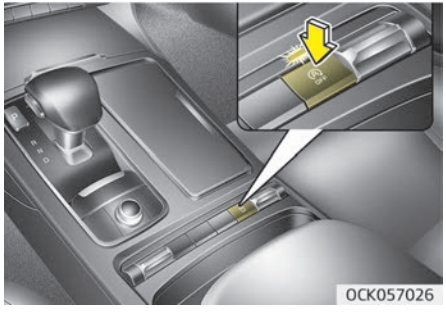

- If you wish to deactivate the ISG system, press the ISG OFF button. The light on the ISG OFF button will illuminate.
- If you press the ISG OFF button again, the system will be activated and the light on the ISG OFF button will turn off.

ISG system malfunction

The system may not operate when:

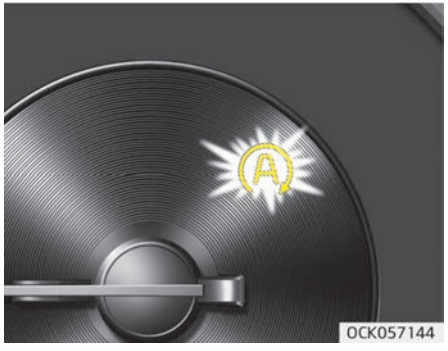

The ISG related sensors or system error occurs.
The following will happen:

- The yellow AUTO STOP (Ⓐ) indicator on the instrument cluster will stay on after blinking for 5 seconds.
- The light on the ISG OFF button will illuminate.

✻ NOTICE

- If the ISG OFF button light is not turned off by pressing the ISG OFF button again or if the ISG system continuously does not work correctly, have your vehicle inspected by a professional workshop as soon as possible.
  Kia recommends to contact an authorized Kia dealer/service partner.
- When the ISG OFF button light comes on, it may stop illuminating after driving your vehicle at approximately 80 km/h for a maximum of two hours and setting the fan speed control knob below the 2nd position. If the ISG OFF button light continues to be illuminated in spite of the procedure, have your vehicle inspected by a professional workshop as soon as possible. Kia recommends to contact an authorized Kia dealer/service partner.

⚠ WARNING

When the engine is in Idle Stop mode, it's possible to restart the engine without the driver taking any action.
Before leaving the car or doing anything in the engine room area, stop the engine by turning the ignition switch to the LOCK/OFF position or removing the ignition key.

✻ NOTICE

If the AGM battery is reconnected or replaced, ISG function will not operate immediately.
If you want to use the ISG function, the battery sensor needs to be calibrated for approximately 4 hours with the ignition off and then, turn the engine on and off 2 or 3 times.

DRIVE MODE INTEGRATED CONTROL SYSTEM

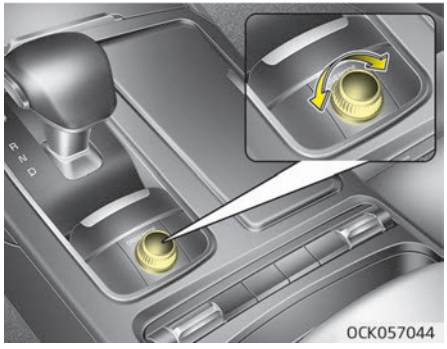

The drive mode may be selected according to the driver's preference or road condition.
The mode changes whenever the DRIVE MODE button is turned.

- SMART mode : SMART mode automatically adjusts the driving mode (ECO " COMFORT " SPORT) in accordance with the driver's driving habits.
- COMFORT mode : COMFORT mode provides soft driving and comfortable riding.
- SPORT/SPORT+ mode : SPORT mode provides sporty but firm riding.
- ECO mode : ECO mode improves fuel efficiency for eco-friendly driving.

If it is in ECO mode, ECO mode will be set when the engine is restarted. (However, if it is in SMART/COMFORT/SPORT/SPORT+ mode, the driving mode will be set to COMFORT mode when the engine is restarted.)

SMART mode







SMART SMART mode selects the proper driving mode among ECO, COMFORT and SPORT by judging the driver's driving habits (i.e. mild or dynamic) from the brake pedal depression or the steering wheel operation.

- Press the DRIVE MODE button to activate SMART mode. When SMART mode is activated, the indicator illuminates on the instrument cluster.
- The indicator illuminates in blue, when the driver's driving is categorized to be mild. It illuminates in white, when the driver's driving is categorized to be normal. It illuminates in red, when the driver's driving is categorized to be dynamic during abrupt braking or sharp curving.

- The vehicle starts in COMFORT mode, when the engine was turned OFF in SMART mode.
- SMART mode automatically controls the vehicle driving, such as gear shifting patterns, engine torque, riding quality (if equipped with the electronic suspension system), and power distribution (if equipped with the All-Wheel Drive (AWD) system), in accordance with the driver's driving habits.

✻ NOTICE

- When you mildly drive the vehicle in SMART mode, the driving mode changes to ECO mode to improve fuel efficiency. However, the actual fuel efficiency may differ in accordance with your driving situations (i.e. upward/downward slope, vehicle deceleration/acceleration).

(Continued)

(Continued)

- When you dynamically drive the vehicle in SMART mode by abruptly decelerating or sharply curving, the driving mode changes to SPORT mode. However, it may adversely affect fuel economy.

Various driving situations, which you may encounter in SMART mode

- The driving mode automatically changes to ECO mode after a certain period of time, when you gently depress the accelerator pedal (Your driving is categorized to be mild.).
- The driving mode automatically changes from SMART ECO mode to SMART NORMAL mode after a certain period of time, when you sharply or repetitively depress the accelerator pedal.
- The driving mode automatically changes to SMART COMFORT mode with the same driving patterns, when the vehicle starts to drive on an upward slope of a certain angle. The driving mode automatically returns to SMART ECO mode, when the vehicle enters a leveled road.
- The driving mode automatically changes to SMART SPORT, when you abruptly accelerate the vehicle or repetitively operate the steering wheel (Your driving is categorized to be sporty.). In this mode, your vehicle drives in a lower gear for abrupt accelerating/decelerating and increases the engine brake performance.
- You may still sense the engine brake performance, even when you release the accelerator pedal in SMART SPORT mode. It is because your vehicle remains to be in a lower gear over a certain period of time for next acceleration. Thus, it is a normal driving situation, not indicating any malfunction.
- The driving mode automatically changes to SMART SPORT mode only in harsh driving situations. In most of the normal driving situations, the driving mode sets to be either in SMART ECO mode or in SMART COMFORT mode.

Limitation of SMART mode

The SMART mode may be limited in following situations. (The OFF indicator illuminates in those situations.)

- The driver manually moves the shift lever : It deactivates SMART mode. The vehicle drives, as the driver manually moves the shift lever.
- The cruise control is activated : The cruise system may deactivate the SMART mode. When a higher system is set by the cruise system, it starts to control vehicle speed and deactivates SMART mode. (SMART mode is not deactivated just by activing the cruise system.)
- The transmission oil temperature is either extremely low or extremely high : The SMART mode can be active in most of the normal driving situations. However, an extremely high/low transmission oil temperature may temporarily deactivate the SMART mode, because the transmission condition is out of normal operation condition.

SPORT/SPORT+ mode



SPORT/SPORT+ mode manages the driving dynamics by automatically adjusting the steering effort, and the engine and transmission control logic for enhanced driver performance.

- When SPORT/SPORT+ mode is selected by pressing the DRIVE MODE button, the SPORT/SPORT+ indicator (orange color) will illuminate.
- Whenever the engine is restarted, the Drive Mode will revert back to COMFORT mode. If SPORT/SPORT+ mode is desired, re-select SPORT/SPORT+ mode from the DRIVE MODE button.
- When SPORT/SPORT+ mode is activated:
  - The engine rpm will tend to remain raised over a certain length of time even after releasing the accelerator
  - Upshifts are delayed when accelerating
- When SPORT+ is selected, ESC off indicator lights up (ESC off state 1)

✻ NOTICE

In SPORT/SPORT+ mode, the fuel efficiency may decrease.

ECO mode



When the Drive Mode is set to ECO mode, the engine and transmission control logic are changed to maximize fuel efficiency.

- When ECO mode is selected by pressing the DRIVE MODE button, the ECO indicator (green color) will illuminate.
- If the vehicle is set to ECO mode, when the engine is turned OFF and restarted the Drive Mode setting will remain in ECO mode.

✻ NOTICE

Fuel efficiency depends on the driver's driving habit and road condition.

When ECO mode is activated:

- The acceleration response may be slightly reduced if the accelerator pedal is depressed moderately.
- The air conditioner performance may be limited.
- The shift pattern of the automatic transmission may change.
- The engine noise may get louder.

The above situations are normal conditions when ECO mode is activated to improve fuel efficiency.

Limitation of ECO mode operation:

If the following conditions occur while ECO mode is operating, the system operation is limited even though there is no change in the ECO indicator.

- When the coolant temperature is low:
  The system will be limited until engine performance becomes normal.
- When driving up a hill:
  The system will be limited to gain power when driving uphill because engine torque is restricted.
- When driving the vehicle with the automatic transmission gear shift lever in manual mode.
  The system will be limited according to the shift location.

LANE KEEPING ASSIST (LKA) SYSTEM (IF EQUIPPED)

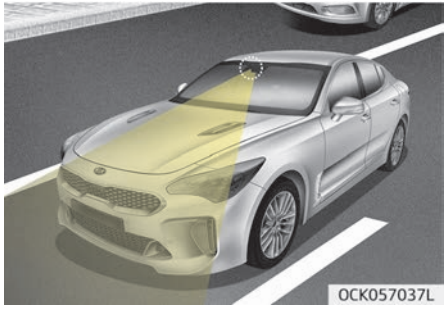

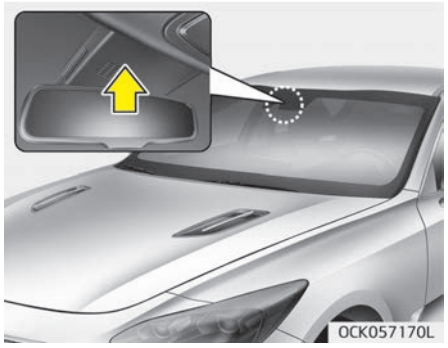

The Lane Keeping Assist (LKA) system detects the lane markers on the road with a front view camera at the front windshield, and assists the driver's steering to help keep the vehicle in the lanes.

When the system detects the vehicle straying from its lane, it alerts the driver with a visual and audible warning, while applying a slight countersteering torque, trying to prevent the vehicle from moving out of its lane.

⚠ WARNING

- **Driver is responsible for being aware of surroundings and steering the vehicle for safe driving practices.**
- **Do not steer the steering wheel suddenly when the steering wheel is being assisted by the system.**
- **LKA helps prevent the driver from moving out of the lane unintentionally by assisting the driver's steering. However, the system is just a convenience function and the steering wheel is not always controlled. While driving, the driver should pay attention to the steering wheel.**

(Continued)

(Continued)

- **The operation of the LKA can be cancelled or not work properly according to road condition and surroundings. Always be cautious when driving.**
- **Do not disassemble a front view camera temporarily for tinted window or attaching any types of coatings and accessories.**
  If you disassemble the camera and assemble it again, take your vehicle to an authorized Kia dealer and have the system checked to need a calibration.
- **When you replace the windshield glass, front view camera or related parts of the steering, take your vehicle to an authorized Kia dealer and have the system checked to need a calibration.**
- **The system detects lane markers and controls the steering wheel by a front view camera, therefore, if the lane markers are hard to detect, the system may not work properly. Always be cautious when using the system.**

(Continued)

(Continued)

- **When the lane markers are hard to detect, please refer to "Driver's Attention" on page 5-110.**
- **Do not remove or damage the related parts of LKA.**
- **Do not place objects on the crash pad that reflects light such as mirrors, white paper, etc. it may cause malfunction of LKA if the sunlight is reflected.**
- **You may not hear warning sound of LKA because of the excessive audio sound.**
- **If you continue to drive with your hands off the steering wheel, the LKA will stop controlling the steering wheel after the hands off alarm. After then, if you drive with your hands on the steering wheel, the control will be activated again.**
- **If the vehicle speed is high, steering torque for assistance will not be enough to keep your vehicle within the lane. If so, the vehicle may move out of its lane. Obey speed limit when using LKA.**

(Continued)

(Continued)

- **If you attach objects to the steering wheel, the system may not assist steering.**
- **If you attach objects to the steering wheel, hands off alarm may not work properly.**

LKA operation

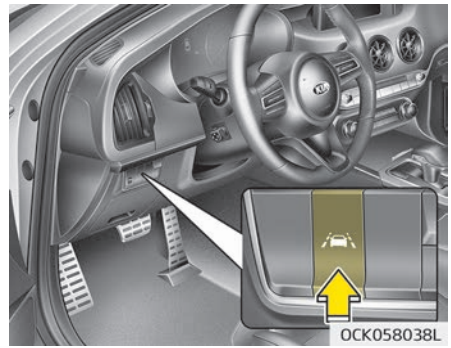

To activate/deactivate the LKA:
With the ignition switch in the ON position, press the LKA button located on the instrument panel on the lower left hand side of the driver.

The indicator in the cluster display will initially illuminate white.
When the indicator(white) activated in the previous ignition cycle, the system turns on without any control.
If you press the LKA button again, the indicator on the cluster display will go off.
The color of indicator will change depend on the condition of LKA.

- White : Sensor does not detect the lane marker or vehicle speed is less than 60 kph.
- Green : Sensor detects the lane marker and system is able to control the steering.

LKA activation

- To see the LKA screen on the LCD display in the cluster, Tab to the ASSIST mode ( ).
- For further details, refer to "User Setting Mode" on page 4-64.
- After LKA is activated, if both lane markers are detected, vehicle speed is over 60 kph and all the activation conditions are satisfied, a green steering wheel indicator will illuminate and the steering wheel will be controlled.

⚠ WARNING

The Lane Keeping Assist (LKA) system is a system to help prevent the driver from leaving the lane. However, the driver should not solely rely on the system but always check the road conditions when driving.

■ Lane undetected ■ Lane detected

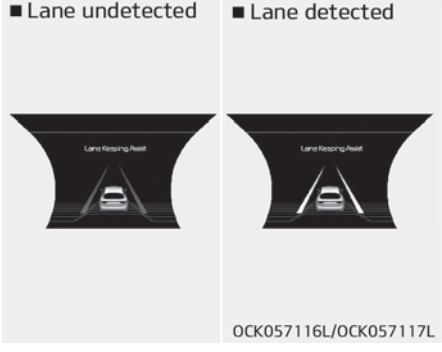

OCK057116L/OCK057117L

If the speed of the vehicle is over 60 kph and the system detects lane markers, the color changes from gray to white

When the conditions below are met, LKA will be enable to assist steering.

- Vehicle speed is above 60 kph.
- Both lane markers are detected by LKA.
- The vehicle is between the lane markers.

If LKA can assist steering, a green steering wheel indicator will illuminate.

Warning

■ Left lane ■ Right lane

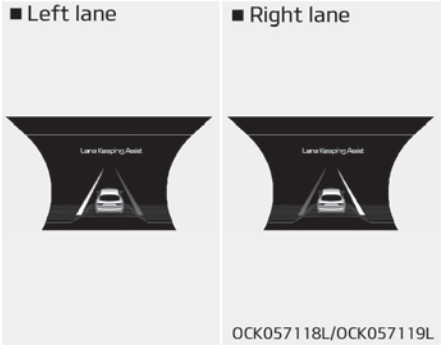

OCK057118L/OCK057119L

If the vehicle leaves a lane, the lane marker you cross will blink on the LCD display.

If the vehicle moves out its lane because steering torque for assistance is not enough, the line indicator of deviation direction will blink.

- If all the conditions to activate LKA is not satisfied, the system will convert to LDW and warn the driver only when the driver crosses the lane markers.

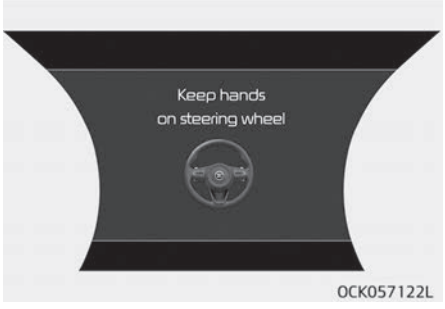

OCK057122L



OCK057124L

If the driver takes hands off the steering wheel for several seconds while the LKA is activated, the system will warn the driver.

⚠ WARNING

- **The warning message may appear late according to road conditions. Therefore, always have your hands on the steering wheel while driving.**
- **If you hold the steering wheel lightly, the system would generate hands off warning because LKA can treat the situation as you do not grab the wheel.**

If the driver still does not have their hands on the steering wheel after several seconds, the system will not control the steering wheel and warn the driver only when the driver crosses the lane markers.
However, if the driver has their hands on the steering wheel again, the system will start controlling the steering wheel.

⚠ WARNING

- **The driver is responsible for accurate steering.**

(Continued)

(Continued)

- **Even though the steering is assisted by the system, the driver may control the steering wheel.**
- **Turn off the system and drive the vehicle in below situations.**
  - **In bad weather**
  - **In bad road condition**
  - **When the steering wheel needs to be controlled by the driver frequently.**
- **The steering wheel may feel heavier when the steering wheel is assisted by the system than when it is not.**

✻ NOTICE

- Even though the steering is assisted by the system, the driver may control the steering.
- The steering wheel may feel heavier when the steering wheel is assisted by the system than when it is not.

The system will be cancelled when:

- You change lanes with the turn signal.
  - Using the turn signal to change lanes.
  - If you change lanes without the turn signal on, the steering wheel might be controlled.
- LKA can transit to steering assist mode when the car is near to middle of the lane after system on or the lane was changed. LKA can not assist steering if the vehicle follows lane marker too close continuously before transition to steering assist mode.
- The control of ESC (Electronic Stability Control) or VSM (Vehicle Stability Management) is activated.
- The steering will not be assisted when your drive fast on a sharp curve.
- The steering will not be assisted when vehicle speed is below 60 kph and over 180 kph.
- The steering will not be assisted when you change lanes fast.
- The steering will not be assisted when you brake suddenly.

- The steering will not be assisted when the lane is very wide or narrow.
- The steering will not be assisted when only one side lane marker is detected.
- There are more than two lane markers such as a construction area.
- Radius of a curve is too small.
- When you turn steering wheel suddenly, the LKA will be disabled temporarily.
- Driving on a steep slope or hill.

Driver's attention

The driver must be cautious in the below situations may not work properly when recognition of the lane marker is poor or limited :

When lane and road condition is poor

- It is difficult to distinguish the lane marker from road when the lane marker is covered with dust or sand.
- It is difficult to distinguish the color of the lane marker from road.
- There is something looks like a lane marker.
- The lane marker is indistinct or damaged.
- The number of lanes increases/decreases or the lane lines are crossing (Driving through a toll plaza/toll gate, merged/divided lane).
- There are more than two lane markers.
- The lane marker is very thick or thin.
- The lane marker is not visible due to snow, rain, stain, a puddle or other factors.
- A shadow is on the lane marker because of a median strip, guardrail, noise barriers and others.
- When the lane markers are complicated or a structure substitutes for the lines such as a construction area.
- There are crosswalk signs or other symbols on the road.
- The lane suddenly disappears such as at the intersection.
- The lane marker in a tunnel is covered with dirt or oil and etc.

When external condition is intervened

- The brightness of outside changes suddenly when entering/existing a tunnel or passing under a bridge.
- The headlamps are not on at night or in a tunnel, or light level is low.
- There is a boundary structure in the roadway.
- The light of street, sun, oncoming vehicle and so on reflects from the water on the road.
- When light shines brightly in the reverse direction you drive.
- The distance from the vehicle ahead is very short or the vehicle ahead drives hiding the lane line.
- You drive on a steep grade or a sharp curve.
- The vehicle vibrates heavily.
- The temperature near inside mirror is very high due to direct sun light and etc.

When front visibility is poor

- The lens or windshield is covered by strange materials.
- The sensor cannot detect the lane because of fog, heavy rain or snow.
- The windshield is fogged by humid air in the vehicle.
- Putting something on the crash pad and etc.

⚠ WARNING

The Lane Keeping Assist (LKA) system is a system to help prevent the driver from leaving the lane. However, the driver should not solely rely on the system but always take the necessary actions for safe driving practices.

LKA malfunction



- If there is a problem with the system a message will appear. If the problem continues the LKA fail indicator will illuminate.

LKA fail indicator

The LKA fail indicator (yellow) will illuminate with an audible warning if the LKA is not working properly. In this case, have the system checked by a professional workshop. Kia recommends to visit an authorized Kia dealer/service partner.

When there is a problem with the system do one of the following:

- Turn the system on after turning the engine off and on again.
- Check if the ignition switch is in the ON position.
- Check if the system is affected by the weather. (ex: fog, heavy rain, etc.)
- Check if there is foreign matter on the camera lens

If the problem is not solved, have the system checked by a professional workshop. Kia recommends to visit an authorized Kia dealer/service partner.

LKA function change

The driver can change LKA to Lane Departure Warning (LDW) system or change the LKA mode between Standard LKA and Active LKA from the User Settings Mode on the LCD display.
The driver can choose them by placing the ignition switch to the ON position and by selecting 'User Settings', 'Driver Assistance', and 'Lane Keeping Assist (LKA) system'.
The system is automatically set to Standard LKA.

Lane departure

LDW alerts the driver with a visual and acoustic warning when the system detects the vehicle leaving the lane. In this mode, the steering wheel will not be controlled. When the vehicle's front wheel contacts the inside edge of lane line, LKA issues the lane departure warning.

Standard LKA

The Standard LKA mode guides the driver to keep the vehicle within the lanes. It rarely controls the steering wheel, when the vehicle drives well inside the lanes. However, it starts to control the steering wheel, when the vehicle is about to deviate from the lanes.

Active LKA

The active LKA mode provides more frequent steering wheel control in comparison with the Standard LKA mode. Active LKA can reduce the driver's fatigue to assist the steering for maintaining the vehicle in the middle of the lane.

BLIND-SPOT COLLISION WARNING (BCW) SYSTEM (IF EQUIPPED)

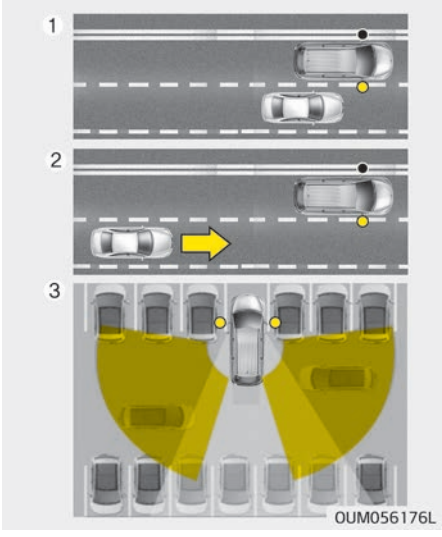

The BCW (Blind-Spot Collision Warning) system uses a radar sensor to alert the driver while driving.
It senses the rear side territory of the vehicle and provides information to the driver.

1. BCW (Blind-Spot Collision Warning)
   Warning range is dependent on your vehicle speed. However, if the speed of your vehicle is faster by 10 km/h or more than other nearby vehicles, the warning is not operated.
2. LCA (Lane change assist)
   When vehicles are approaching to your vehicle at high speed, the warning is operated.
3. RCCW (Rear Cross-Traffic Collision Warning)
   When your vehicle moves backward, the sensor detects approaching vehicles to the left or right side direction and warning is operated.

⚠ WARNING

- **Always check the road condition while driving for unexpected situations even though the BCW (Blind-Spot Collision Warning) system is operating.**

(Continued)

(Continued)

- **BCW (Blind-Spot Collision Warning) system is a system made for convenience. Do not solely rely on the system but always pay attention to drive safely.**
- **Distance from the approaching vehicle can be seen differently according to the relative speed.**

BCW (Blind-Spot Collision Warning) / LCA (Lane Change Assist)

Operating conditions

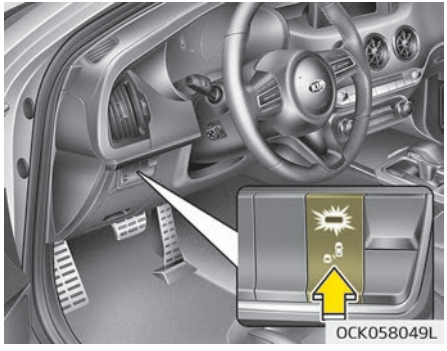

The indicator on the switch will illuminate when the BCW (Blind-Spot Collision Warning) system switch is pressed with the ignition switch ON. If the vehicle speed exceeds 30 km/h (20 mph), the system will activate.
If you press the switch again, the switch indicator and system will be turned off.
If the ignition switch is turned OFF and ON the system returns to the previous state.

When the system is not used turn the system off by pressing the switch.
When the system is turned on the warning light will illuminate for 3 seconds on the outside rearview mirror.

Warning type

The system will activate when:

1. The system is on
2. Vehicle speed is above 30 km/h (20 mph)
3. Other vehicles are detected in the rear side

⚠ WARNING

- **Always check the road condition while driving for unexpected situations even though the Blind-Spot Collision Warning System (BCW) is operating.**
- **The Blind-Spot Collision Warning System (BCW) is a supplemental system to assist you. Do not entirely rely on the system. Always pay attention, while driving, for your safety.**

(Continued)

(Continued)

- **The Blind-Spot Collision Warning System (BCW) is not a substitute for proper and safe driving. Always drive safely and use caution when changing lanes or backing the vehicle up. The Blind-Spot Collision Warning System (BCW) may not detect every object alongside the vehicle.**

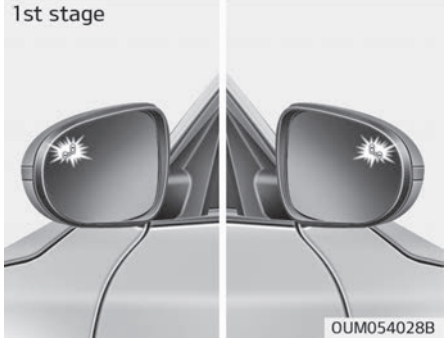

If a vehicle is detected within the boundary of the system, a warning light will illuminate on the outside rearview mirror.

If the detected vehicle is not in detection range, the warning will be turned off.

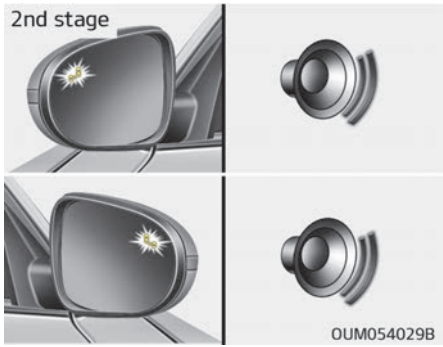

The second stage alarm will activate when:

1. The first stage alert is on
2. The turn signal is on to change a lane

When the second stage alert is activated, a warning light will be blinking on the outside rearview mirror and an alarm will sound.
If you move the turn signal switch to origin position, the second stage alert will be deactivated.

– The second stage alarm can be deactivated.

- To activate the alarm:
  Go to the User Settings Mode ➟ Driver Assistance and select "Blind-Spot Collision Warning Sound" on the LCD display.
- To deactivate the alarm:
  Go to the User Settings Mode ➟ Driver Assistance and deselect "Blind-Spot Collision Warning Sound" on the LCD display.

⚠ CAUTION

The alarm function helps alert the driver. Deactivate this function only when it is necessary.

Detecting sensor



The sensors are located inside the rear bumper.
Always keep the rear bumper clean for the system to work properly.

RCCW (rear cross-traffic collision warning)

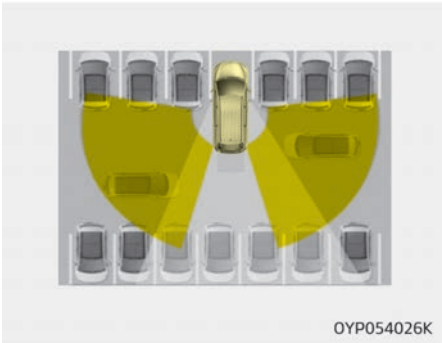

When your vehicle moves backwards from a parking position, the sensor detects approaching vehicles to the left or right side direction and gives information to the driver.

Operating conditions

- Select RCCW (Rear Cross-Traffic Collision Warning) in "User Settings" under "Driver Assistance" on the instrument cluster. The system will turn on and stand by to be activated.
- Select RCCW again, to turn the system off.
- If the vehicle is turned off and on again, the RCCW system will return to the state right before the vehicle was turned off. Turn the RCCW system off when not in use.
- The system is operated when the vehicle speed is below 10 km/h with the shift lever in R (Reverse).
- The RCCW (Rear Cross-Traffic Collision Warning) detection range is approximately 0.5m~20m based on side direction. If an approaching vehicle speed is 4 km/h~36 km/h in detection range, The warning is on. However, the system sensing range is different based on conditions. Always pay attention to surrounding.

Warning type

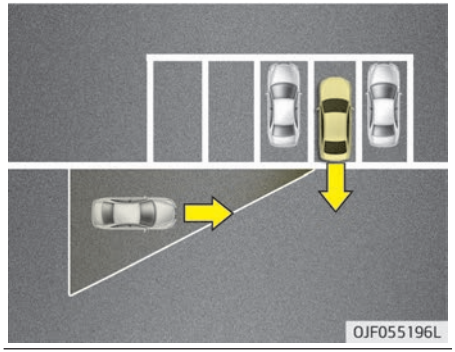





- If an approaching vehicle detected by sensors, the warning is chime and the warning light will blink on the outside rearview mirror.
- If the detected vehicle is out of detection range, moving away in the opposite direction or moving slow, or if the vehicle is right behind your vehicle, if the direction of the other vehicle is not heading towards your vehicle, the warning is cancelled.
- The system may not be operating properly due to other factors or circumstances, so always pay attention to your surrounding.

❇ If the bumper on either side is blocked by a barrier or vehicles, the system sensing ability may be deteriorated.

⚠ WARNING

- **When the BCW system is being activated, The warning light on the outside rearview mirror will illuminate whenever a vehicle is detected at the rear side by the system. To avoid accidents, do not focus only on the warning light and neglect to see the surrounding of the vehicle.**
- **Drive safely even though the vehicle is equipped with a BCW (Blind-Spot Collision Warning) system. Do not solely rely on the system but check for yourself before changing lanes.**
  The system may not alert the driver in some conditions so always check the surroundings while driving.

(Continued)

(Continued)

- **The Blind-Spot Collision Warning system (BCW) and Rear Cross-Traffic Collision Warning (RCCW) are not a substitute for proper and safe driving practices. Always drive safely and use caution when changing lanes or backing up your vehicle. The Blind- Spot Collision Warning system (BCW) may not detect every object alongside the vehicle.**

⚠ CAUTION

- **The system may not work properly if the bumper has been replaced or if a repair work has been done near the sensor.**
- **The detection area differs according to the roads width. If the road is narrow the system may detect other vehicles in the second next lane.**
- **On the contrary, if the road is very wide the system may not detect other vehicles in the next lane.**

(Continued)

(Continued)

- **The system might be turned off due to strong electromagnetic waves.**

Warning message

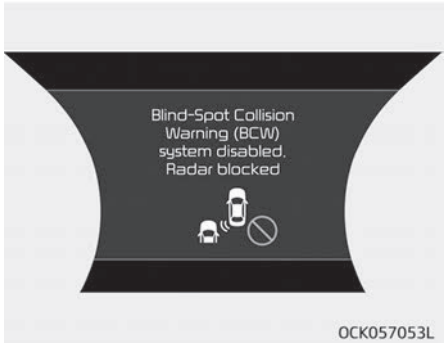

The message will appear to notify the driver if there are foreign substances on the surface or inside the rear bumper or it is hot near the rear bumper. The light on the switch and the system will be turned off automatically.
Remove the foreign substance on the rear bumper.

After the foreign substance is removed, if you drive for approximately 10 minutes, the system will work normally.
If the system does not work normally even though the foreign substance, trailer or carrier, or other equipment is removed, take your vehicle to a professional workshop and have the system checked. Kia recommends to visit an authorized Kia dealer/service partner.
It is possible to get the message with no foreign substance on the rear bumper, for example, when driving in sparse rural or open area, such as desert, where there is insufficient data for operation.
This message may also activate during heavy rain or due to road spray.
In this case, the vehicle does not need service.
When the cargo area or other equipment is being used, turn all functions of the system [OFF].

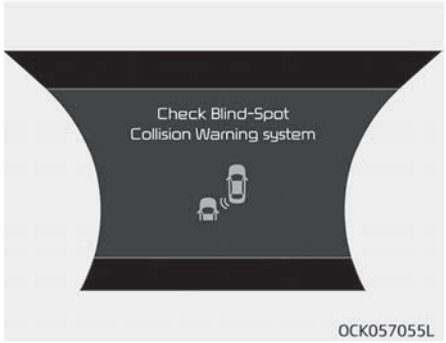

If the system does not work properly, a warning message will appear and the light on the switch will turn off. The system will turn off automatically.
In this case, have the system checked by a professional workshop. Kia recommends to visit an authorized Kia dealer/service partner.

Non-operating condition

Outside rearview mirror may not alert the driver when:

- The outside rearview mirror housing is damaged or covered with debris.
- The window is covered with debris.
- The windows are severely tinted.

Driver's attention

The driver must be cautious in the below situations, because the system may not detect other vehicles or objects in certain circumstances.

- The vehicle drives on a curved road or through a tollgate.
- The sensor is polluted with rain, snow, mud, etc.
- The rear bumper, in which the sensor is located, is covered or blocked with a foreign matter such as a sticker, a bumper guard, a bicycle stand, etc.
- The rear bumper is damaged, or the sensor is out of the original default position.
- The vehicle height gets lower or higher due to heavy loading in a trunk(tailgate), abnormal tire pressure, etc.
- The vehicle drives in a bad weather such as heavy rain or snow.
- There is a fixed object near the vehicle, such as a guardrail, pedestrian, animal, tunnel, etc.
- A big vehicle is near such as a bus or truck.
- A motorcycle or bicycle is near.
- A flat trailer is near.
- If the vehicle has started at the same time as the vehicle next to you and has accelerated.
- When the other vehicle passes at a very fast speed.
- While changing lanes.
- When going down or up a steep road where the height of the lane is different.
- When the other vehicle approaches very close.
- When a trailer or carrier is installed.
- When the temperature of the rear bumper is very high or low.
- When the sensors are blocked by other vehicles, walls or parking-lot pillars.
- When the detected vehicle also moves back, as your vehicle drives back.
- If there are small things like Shopping cart, baby carriage and pedestrians.
- If there is low height vehicle like sport vehicle.
- When other vehicles are close to your vehicle.
- When the vehicle in the next lane moves two lanes away from you OR when the vehicle two lanes away moves to the next lane from you.
- When driving through a narrow road with many plants.
- When driving on wet surface.
- The vehicle is driven near areas containing metal substances such as a construction zone, railroad, etc.
- When the surrounding vehicle or structure is driving in a wide area (desert, field, suburb etc.)

DRIVER ATTENTION WARNING (DAW) SYSTEM (IF EQUIPPED)

The Driver Attention Warning (DAW) system is to warn the driver with any hazardous driving situations upon detecting the driver's fatigue level or inattentive driving practices.

System setting and activation

System setting

- The Driver Attention Warning system is set to be in the OFF position, when your vehicle is first delivered to you from the factory.
- To turn ON the Driver Attention Warning system, turn on the engine, and then select 'User Settings ➟ Driver Assistance ➟ Driver Attention Warning ➟ Normal/Early' on the LCD display.
- The driver can select the Driver Attention Warning system mode.
  - Off : The Driver Attention Warning system is deactivated.
  - Normal : The Driver Attention Warning system alerts the driver of his/her fatigue level or inattentive driving practices.
  - Early : The Driver Attention Warning system alerts the driver of his/her fatigue level or inattentive driving practices faster than Normal mode.
- The set-up of the Driver Attention Warning system will be maintained, as selected, when the engine is re-started.

Display of the driver's attention level



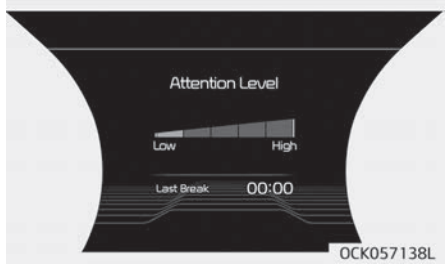

- The driver can monitor their driving conditions on the LCD display.
  - Select 'User Settings Mode' and then 'Assist' on the LCD display. (For more information, refer to “LCD Display” on page 4-60.)
- The driver's attention level is displayed on the scale of 1 to 5. The lower the number is, the more inattentive the driver is.
- The number decreases when the driver does not take a break for a certain period of time.
- The number increases when the driver attentively drives for a certain period of time.
- When the driver turns on the system while driving, it displays ‘Last Break time’ and level reflected that.

Take a break



- The "Consider taking a break" message appears on the LCD display and a warning sounds in order to suggest the driver to take a break, when the driver's attention level is below 1.

- The Driver Attention Warning system does not suggest the driver to take a break, when the total driving time is shorter than 10 minutes.

Resetting the system



- The last break time is set to 00:00 and the driver's attention level is set to 5 (very attentive) when the driver resets the Driver Attention Warning system.

- The driver attention warning system resets in the following situations.
  - The engine is turned OFF
  - The driver unfastens the seat belt and then opens the driver's door.
  - Stop lasting more than 10 minutes.
- The driver attention warning system operates again, when the driver restarts driving.

System disabled

The Driver Attention Warning system enters the ready status and displays the 'Disabled' screen in the following situations.

- The camera sensor keeps failing to detect the lanes.
- Driving speed remains under 60 km/h or over 180 km/h.

System malfunction



When the "Check Driver Attention Warning (DAW) system" warning message appears, the system is not working properly. In this case, have the vehicle checked by a professional workshop. Kia recommends to visit an authorized Kia dealer/service partner.

⚠ WARNING

- **The Driver Attention Warning system is not a substitute for safe driving practices, but a convenience function only. It is the responsibility of the driver to always drive cautiously to prevent unexpected and sudden situations from occurring. Pay attention to the road conditions at all times.**
- **It may suggest a break according to the driver's driving pattern or habits even if the driver doesn't feel fatigued.**
- **The driver, who feels fatigued, should take a break, even though there is no break suggestion by the Driver Attention Warning system.**

✻ NOTICE

The Driver Attention Warning system utilizes the camera sensor on the front windshield for its operation. To keep the camera sensor in

(Continued)

(Continued)

the best condition, you should observe the followings:

- Do not disassemble camera temporarily for tinted window or attaching any types of coatings and accessories. If you disassemble a camera and assemble it again, take your vehicle to a professional workshop and have the system checked. Kia recommends to visit an authorized Kia dealer/service partner.
- Do not locate any reflective objects (i.e. white paper, mirror) over the dashboard. Any light reflection may cause a mal-function of the Driver Attention Warning (DAW) system.
- Pay extreme caution to keep the camera sensor out of water.
- Do not arbitrarily disassemble the camera assembly, nor apply any impact on the camera assembly.

(Continued)

(Continued)

- Playing the vehicle audio system at high volume may offset the Driver Attention Warning system warning sounds.

⚠ CAUTION

The Driver Attention Warning system may not properly operate with limited alerting in the following situations:

- **The lane detection performance is limited. (For more information, refer to "Lane Keeping Assist (LKA) system" on page 5-106.)**
- **The vehicle is violently driven or is abruptly turned for obstacle avoidance (e.g. construction area, other vehicles, fallen objects, bumpy road).**
- **Forward drivability of the vehicle is severely undermined (possibly due to wide variation in tire pressures, uneven tire wear-out, toe-in/toe-out alignment).**

(Continued)

(Continued)

- **The vehicle drives on a curvy road.**
- **The vehicle drives on a bumpy road.**
- **The vehicle drives through a windy area.**
- **The vehicle is controlled by the following driving assist systems:**
  - **Lane Keeping Assist (LKA) system**
  - **Forward Collision-Avoidance Assist (FCA) system.**
  - **Smart Cruise Control (SCC) system**

ECONOMICAL OPERATION

Your vehicle's fuel economy depends mainly on your style of driving, where you drive and when you drive.
Each of these factors affects how many kilometers (miles) you can get from a liter (gallon) of fuel. To operate your vehicle as economically as possible, use the following driving suggestions to help save money in both fuel and repairs:

- Drive smoothly. Accelerate at a moderate rate. Do not make "jackrabbit" starts or full-throttle shifts and maintain a steady cruising speed. Do not race between stop lights. Try to adjust your speed to the traffic so you do not have to change speeds unnecessarily. Avoid heavy traffic whenever possible. Always maintain a safe distance from other vehicles so you can avoid unnecessary braking. This also reduces brake wear.
- Drive at a moderate speed. The faster you drive, the more fuel your vehicle uses. Driving at a moderate speed, especially on the highway, is one of the most effective ways to reduce fuel consumption.
- Do not "ride" the brake or clutch pedal. This can increase fuel consumption and also increase wear on these components. In addition, driving with your foot resting on the brake pedal may cause the brakes to overheat, which reduces their effectiveness and may lead to more serious consequences.
- Take care of your tires. Keep them inflated to the recommended pressure. Incorrect inflation, either too much or too little, results in unnecessary tire wear. Check the tire pressures at least once a month.
- Be sure that the wheels are aligned correctly. Improper alignment can result from hitting curbs or driving too fast over irregular surfaces. Poor alignment causes faster tire wear and may also result in other problems as well as greater fuel consumption.
- Keep your vehicle in good condition. For better fuel economy and reduced maintenance costs, maintain your vehicle in accordance with the maintenance schedule in Chapter 7, Maintenance. If you drive your vehicle in severe conditions, more frequent maintenance is required (see Chapter 7, Maintenance for details).
- Keep your vehicle clean. For maximum service, your vehicle should be kept clean and free of corrosive materials. It is especially important that mud, dirt, ice, etc. not be allowed to accumulate on the underside of the vehicle. This extra weight can result in increased fuel consumption and also contribute to corrosion.
- Travel lightly. Do not carry unnecessary weight in your vehicle. Weight reduces fuel economy.
- Do not let the engine idle longer than necessary. If you are waiting (and not in traffic), turn off your engine and restart only when you're ready to go.
- Remember, your vehicle does not require extended warm-up. After the engine has started, allow the engine to run for 10 to 20 seconds prior to placing the vehicle in gear. In very cold weather, however, give your engine a slightly longer warm-up period.
- Do not "lug" or "over-rev" the engine. Lugging is driving too slowly in too high a gear resulting engine bucking. If this happens, shift to a lower gear. Over-revving is racing the engine beyond its safe limit. This can be avoided by shifting at the recommended speeds.

- Use your air conditioning sparingly. The air conditioning system is operated by engine power so your fuel economy is reduced when you use it.
- Open windows at high speeds can reduce fuel economy.
- Fuel economy is less in crosswinds and headwinds. To help offset some of this loss, slow down when driving in these conditions.

Keeping a vehicle in good operating condition is important both for economy and safety. Therefore, have the system serviced by a professional workshop.
Kia recommends to visit an authorized Kia dealer/service partner.

⚠ WARNING

■ Engine off during motion

Never turn the engine off to coast down hills or anytime the vehicle is in motion. The power steering and power brakes will not function properly without the engine running. Instead, keep the engine on and down-

(Continued)

(Continued)

shift to an appropriate gear for engine braking effect. In addition, turning off the ignition while driving could engage the steering wheel lock (if equipped) resulting in loss of vehicle steering which could cause serious injury or death.

SPECIAL DRIVING CONDITIONS

Hazardous driving conditions

When hazardous driving conditions are encountered such as water, snow, ice, mud, sand, or similar hazards, follow these suggestions:

- Drive cautiously and allow extra distance for braking.
- Avoid sudden braking or steering.
- When braking with non-ABS brakes pump the brake pedal with a light up-and-down motion until the vehicle is stopped.

⚠ WARNING

■ ABS

Do not pump the brake pedal on a vehicle equipped with ABS.

- If stalled in snow, mud, or sand, use second gear. Accelerate slowly to avoid spinning the drive wheels.
- Use sand, rock salt, tire chains, or other non-slip material under the drive wheels to provide traction when stalled in ice, snow, or mud.

⚠ WARNING

■ Downshifting

Downshifting with an automatic transaxle, while driving on slippery surfaces can cause an accident. The sudden change in tire speed could cause the tires to skid. Be careful when downshifting on slippery surfaces.

Rocking the vehicle

If it is necessary to rock the vehicle to free it from snow, sand, or mud, first turn the steering wheel right and left to clear the area around your front wheels. Then, shift back and forth between any forward gear in vehicles equipped with an Automatic Transaxle. Do not race the engine, and spin the wheels as little as possible. If you are still stuck after a few tries, have the vehicle pulled out by a tow vehicle to avoid engine overheating and possible damage to the transaxle.

⚠ CAUTION

Prolonged rocking may cause engine overheating, transaxle damage or failure, and tire damage.

⚠ WARNING

■ Spinning tires

Do not spin the wheels, especially at speeds more than 56 km/h (35 mph). Spinning the wheels at high speeds when the vehicle is stationary could cause a tire to overheat which could result in tire damage that may injure bystanders.

✻ NOTICE

The ESC system should be turned OFF prior to rocking the vehicle.

⚠ WARNING

If your vehicle becomes stuck in snow, mud, sand, etc., then you may attempt to rock the vehicle free by moving it forward and backward. Do not attempt this procedure if people or objects are anywhere near the vehicle. During the rocking operation the vehicle may suddenly move forward or backward as it becomes unstuck, causing injury or damage to nearby people or objects.

Smooth cornering



Avoid braking or gear changing in corners, especially when roads are wet. Ideally, corners should always be taken under gentle acceleration. If you follow these suggestions, tire wear will be held to a minimum.

Driving at night



Because night driving presents more hazards than driving in the daylight, here are some important tips to remember:

- Slow down and keep more distance between you and other vehicles, as it may be more difficult to see at night, especially in areas where there may not be any street lights.
- Adjust your mirrors to reduce the glare from other driver's headlights.

- Keep your headlights clean and properly aimed on vehicles not equipped with the automatic headlight aiming feature. Dirty or improperly aimed headlights will make it much more difficult to see at night.
- Avoid staring directly at the headlights of oncoming vehicles. You could be temporarily blinded, and it will take several seconds for your eyes to readjust to the darkness.

Driving in the rain



Rain and wet roads can make driving dangerous, especially if you're not prepared for the slick pavement. Here are a few things to consider when driving in the rain:

- A heavy rainfall will make it harder to see and will increase the distance needed to stop your vehicle, so slow down.
- Keep your windshield wiping equipment in good shape. Replace your windshield wiper blades when they show signs of streaking or missing areas on the windshield.
- If your tires are not in good condition, making a quick stop on wet pavement can cause a skid and possibly lead to an accident. Be sure your tires are in good shape.
- Turn on your headlights to make it easier for others to see you.
- Driving too fast through large puddles can affect your brakes. If you must go through puddles, try to drive through them slowly.
- If you believe you may have gotten your brakes wet, apply them lightly while driving until normal braking operation returns.

Driving in flooded areas

Avoid driving through flooded areas unless you are sure the water is no higher than the bottom of the wheel hub. Drive through any water slowly. Allow adequate stopping distance because brake performance may be affected.
After driving through water, dry the brakes by gently applying them several times while the vehicle is moving slowly.

Driving off-road

Drive carefully off-road because your vehicle may be damaged by rocks or roots of trees. Become familiar with the off-road conditions where you are going to drive before you begin driving.

Highway driving

Tires

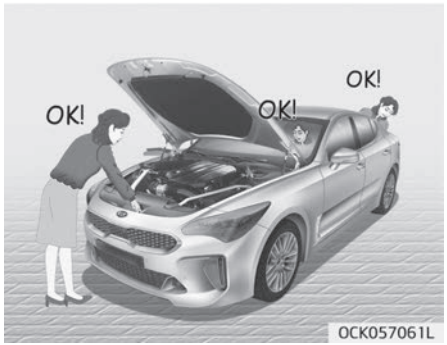

Adjust the tire inflation pressures to specification. Low tire inflation pressures will result in overheating and possible failure of the tires.
Avoid using worn or damaged tires which may result in reduced traction or tire failure.

✻ NOTICE

Never exceed the maximum tire inflation pressure shown on the tires.

⚠ WARNING

- **Underinflated or overinflated tires can cause poor handling, loss of vehicle control, and sudden tire failure leading to accidents, injuries, and even death. Always check the tires for proper inflation before driving. For proper tire pressures, refer to "Tires and wheels" on page 8-09.**
- **Driving on tires with no or insufficient tread is dangerous. Worn-out tires can result in loss of vehicle control, collisions, injury, and even death. Worn-out tires should be replaced as soon as possible and should never be used for driving. Always check the tire tread before driving your vehicle. For further information and tread limits, refer to "Tires and wheels" on page 8-09.**

Fuel, engine coolant and engine oil

High speed travel consumes more fuel than urban motoring. Do not forget to check both engine coolant and engine oil.

Drive belt

A loose or damaged drive belt may result in overheating of the engine.

WINTER DRIVING

Severe weather conditions in the winter result in greater wear and other problems. To minimize the problems of winter driving, you should follow these suggestions:

❊ Snow tires and tire chains for the national language (Icelandic, Bulgarian) see Chapter 9, Appendix.

Snowy or icy conditions

⚠ WARNING

Summer tires are equipped to provide the best driving performance on dry roads, varying according to specification.
Since vehicles equipped with summer tires significantly reduce surface forces when driving on snow or ice roads, it is recommended to use snow tires of the same size as the standard tires of the vehicle or to replace them with all-season tires or to use snow chains.

To drive your vehicle in deep snow, it may be necessary to use snow tires or to install tire chains on your tires. If snow tires are needed, it is necessary to select tires equivalent in size and type of the original equipment tires. Failure to do so may adversely affect the safety and handling of your vehicle. Furthermore, speeding, rapid acceleration, sudden brake applications, and sharp turns are potentially very hazardous practices.
During deceleration, use engine braking to the fullest extent. Sudden brake applications on snowy or icy roads may cause skids to occur. You need to keep sufficient distance between the vehicle in operation in front and your vehicle. Also, apply the brake gently. It should be noted that installing tire chains on the tire will provide a greater driving force, but will not prevent side skids.

❊ NOTICE

Tire chains are not legal in all countries. Check the country laws before fitting tire chains.

Snow tires

If you mount snow tires on your vehicle, make sure they are radial tires of the same size and load range as the original tires. Mount snow tires on all four wheels to balance your vehicle's handling in all weather conditions. Keep in mind that the traction provided by snow tires on dry roads may not be as high as your vehicle's original equipment tires.You should drive cautiously even when the roads are clear. Check with the tire dealer for maximum speed recommendations.

⚠ WARNING

■ Snow tire size

Snow tires should be equivalent in size and type to the vehicle's standard tires. Otherwise, the safety and handling of your vehicle may be adversely affected.

Do not install studded tires without first checking local, state and municipal regulations for possible restrictions against their use.

Tire chains



Since the sidewalls on some radial tires are thinner than other types of tires, they may be damaged by mounting certain types of tire chains on them. Therefore, the use of snow tires is recommended instead of tire chains. Do not mount tire chains on vehicles equipped with aluminum wheels; if unavoidable, use AutoSock (fabric snow chain). Install the tire chain after reviewing the instructions provided with the tire chains.
Damage to your vehicle caused by improper tire chain use is not covered by your vehicle manufacturer's warranty.

✻ NOTICE

- Install AutoSock (fabric snow chain) on the rear tires for 2WD vehicles or for AWD vehicles. It should be noted that installing AutoSock (fabric snow chain) on the tires will provide a greater driving force, but will not prevent side skids.
- Do not install studded tires without first checking local and municipal regulations for possible restrictions against their use.

⚠ CAUTION

When using AutoSock (fabric snow chain):

- **Wrong size chains or improperly installed chains can damage your vehicle's brake lines, suspension, body and wheels.**

(Continued)

(Continued)

- **If you hear noise caused by chains contacting the body, retighten the chain to prevent contact with the vehicle body.**
- **To prevent body damage, retighten the chains after driving 0.5~1.0 km (0.3~0.6 miles).**

Chain installation

When installing AutoSock (fabric snow chain), follow the manufacturer's instructions and mount them as tightly possible. Drive slowly (less than 30 km/h (20 mph)) with chains installed. If you hear the chains contacting the body or chassis, stop and tighten them. If they still make contact, slow down until the noise stops.
Remove the AutoSock (fabric snow chain) as soon as you begin driving on cleared roads.

⚠ WARNING

■ Mounting chains

(Continued)

(Continued)

When mounting snow chains, park the vehicle on level ground away from traffic. Turn on the vehicle Hazard Warning flashers and place a triangular emergency warning device behind the vehicle if available. Always place the vehicle in P (Park), apply the parking brake and turn off the engine before installing snow chains.

⚠ WARNING

■ Tire chains

- **The use of chains may adversely affect vehicle handling.**
- **Do not exceed 30 km/h (20 mph) or the chain manufacturer's recommended speed limit, whichever is lower.**
- **Drive carefully and avoid bumps, holes, sharp turns, and other road hazards, which may cause the vehicle to bounce.**
- **Avoid sharp turns or locked wheel braking.**

⚠ CAUTION

- **Chains that are the wrong size or improperly installed can damage your vehicle's brake lines, suspension, body and wheels.**
- **Stop driving and re-tighten the chains any time you hear them hitting the vehicle.**

Use high quality ethylene glycol coolant

Your vehicle is delivered with high quality ethylene glycol coolant in the cooling system. It is the only type of coolant that should be used because it helps prevent corrosion in the cooling system, lubricates the water pump and prevents freezing. Be sure to replace or replenish your coolant in accordance with 7-33. Before winter, have your coolant tested to assure that its freezing point is sufficient for the temperatures anticipated during the winter.

Check battery and cables

Winter puts additional burdens on the battery system. Visually inspect the battery and cables as described on page 7-50. Have the level of charge in your battery checked by a professional workshop. Kia recommends to visit an authorized Kia dealer/service partner.

Change to winter weight oil if necessary

In some climates it is recommended that a lower viscosity "winter weight" oil be used during cold weather. See “Recommendations” on page 8-16. If you aren't sure what weight oil you should use, Kia recommends to consult an authorized Kia dealer/service partner.

Check spark plugs and ignition system

Inspect your spark plugs as described on page 7-33 and replace them if necessary. Also check all ignition wiring and components to be sure they are not cracked, worn or damaged in any way.

To keep locks from freezing

To keep the locks from freezing, squirt an approved de-icer fluid or glycerine into the key opening. If a lock is covered with ice, squirt it with an approved de-icing fluid to remove the ice. If the lock is frozen internally, you may be able to thaw it out by using a heated key. Handle the heated key with care to avoid injury.

Use approved window washer anti-freeze in system

To keep the water in the window washer system from freezing, add an approved window washer anti-freeze solution in accordance with instructions on the container. Window washer anti-freeze is available from an authorized Kia dealer/service partner and most auto parts outlets. Do not use engine coolant or other types of anti-freeze as these may damage the paint finish.

Don't let your parking brake freeze

Under some conditions your parking brake can freeze in the engaged position. This is most likely to happen when there is an accumulation of snow or ice around or near the rear brakes or if the brakes are wet. If there is a risk the parking brake may freeze, apply it only temporarily while you put the shift lever in P (Automatic Transaxle and block the rear wheels so the vehicle cannot roll. Then release the parking brake.

Don't let ice and snow accumulate underneath

Under some conditions, snow and ice can build up under the fenders and interfere with the steering. When driving in severe winter conditions where this may happen, you should periodically check underneath the vehicle to be sure the movement of the front wheels and the steering components is not obstructed.

Carry emergency equipment

Depending on the severity of the weather, you should carry appropriate emergency equipment. Some of the items you may want to carry include tire chains, tow straps or chains, flashlight, emergency flares, sand, shovel, jumper cables, window scraper, gloves, ground cloth, coveralls, blanket, etc.

TRAILER TOWING (IF EQUIPPED)

If you are considering towing with your vehicle, you should first check with your country's Department of Motor Vehicles to determine their legal requirements.
Since laws vary the requirements for towing trailers, cars, or other types of vehicles or apparatus may differ. Kia recommends to ask an authorized Kia dealer/service partner.

⚠ WARNING

■ Towing a trailer

If you don't use the correct equipment and/or drive improperly, you can lose control when you pull a trailer. For example, if the trailer is too heavy, the brakes may not work well - or even at all. You and your passengers could be seriously or fatally injured. Pull a trailer only if you have followed all the steps in this section.

⚠ WARNING

■ Weight limits

Before towing, make sure the total trailer weight, GCW (gross combination weight), GVW (gross vehicle weight), GAW (gross axle weight) and trailer tongue load are all within the limits.

⚠ WARNING

When you tow the trailer, make sure that you turn off the ISG and LKA Function.

✻ NOTICE

■ For Europe

(Continued)

(Continued)

- The technically permissible maximum load on the rear axle(s) may be exceeded by not more than 15 % and the technically permissible maximum laden mass of the vehicle may be exceeded by not more than 10 % or 100 kg (220.4 lbs), whichever value is lower. In this case, do not exceed 100 km/h (62.1 mph) for vehicle of category M1 or 80 km/h (49.7 mph) for vehicle of category N1.
- When towing a trailer, the additional load imposed at the trailer coupling device may cause the rear tire maximum load ratings to be exceeded, but not by more than 15%. In such a case, do not exceed 100 km/h (62.1 mph), and the rear tire pressure should be at least 20 kPa (0.2 bar) above the tire pressure(s) as recommended for normal use (i.e. without a trailer attached).

⚠ CAUTION

Pulling a trailer improperly can damage your vehicle and result in costly repairs not covered by your warranty. To pull a trailer correctly, follow the advice in this section.

Your vehicle can tow a trailer. To identify what the vehicle trailering capacity is for your vehicle, you should read the information in "Weight of the trailer" on page 5-141.
Remember that trailering is different than just driving your vehicle by itself. Trailering means changes in handling, durability, and fuel economy.
Successful, safe trailering requires correct equipment, and it has to be used properly.
This section contains many time-tested, important trailering tips and safety rules. Many of these are important for your safety and that of your passengers. Please read this section carefully before you pull a trailer.

Load-pulling components such as the engine, transaxle, wheel assemblies, and tires are forced to work harder against the load of the added weight. The engine is required to operate at relatively higher speeds and under greater loads. This additional burden generates extra heat. The trailer also considerably adds wind resistance, increasing the pulling requirements.

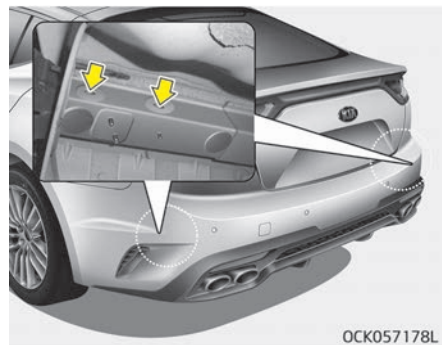

✻ NOTICE

■ Location of trailer mounting
(Continued)

(Continued)

The mounting hole for hitches are located on both sides of the underbody behind the rear tires.

Hitches

It's important to have the correct hitch equipment. Crosswinds, large trucks going by, and rough roads are a few reasons why you'll need the right hitch. Here are some rules to follow:

- Do you have to make any holes in the body of your vehicle when you install a trailer hitch? If you do, then be sure to seal the holes later when you remove the hitch.
  If you do not seal them, deadly carbon monoxide (CO) from your exhaust can get into your vehicle, as well as dirt and water.
- The bumpers on your vehicle are not intended for hitches. Do not attach rental hitches or other bumper-type hitches to them. Use only a frame-mounted hitch that does not attach to the bumper.
- Kia trailer hitch accessory is available at an authorized Kia dealer/service partner.

Safety chains

You should always attach chains between your vehicle and your trailer. Cross the safety chains under the tongue of the trailer so that the tongue will not drop to the road if it becomes separated from the hitch.
Instructions about safety chains may be provided by the hitch manufacturer or by the trailer manufacturer. Follow the manufacturer's recommendation for attaching safety chains. Always leave just enough slack so you can turn with your trailer. And, never allow safety chains to drag on the ground.

Trailer brakes

If your trailer is equipped with a braking system, make sure it conforms to your country's regulations and that it is properly installed and operating correctly.
If your trailer weight exceeds the maximum allowed weight without trailer brakes, then the trailer will also require its own brakes as well. Be sure to read and follow the instructions for the trailer brakes so you'll be able to install, adjust and maintain them properly.

- Do not tap into or modify your vehicle's brake system.

⚠ WARNING

■ Trailer brakes

Do not use a trailer with its own brakes unless you are absolutely certain that you have properly set up the brake system. This is not a task for amateurs. Use an experienced, competent trailer shop for this work.

Driving with a trailer

Towing a trailer requires a certain amount of experience. Before setting out for the open road, you must get to know your trailer. Acquaint yourself with the feel of handling and braking with the added weight of the trailer. And always keep in mind that the vehicle you are driving is now a good deal longer and not nearly so responsive as your vehicle is by itself.

Before you start, check the trailer hitch and platform, safety chains, electrical connector(s), lights, tires and mirror adjustment. If the trailer has electric brakes, start your vehicle and trailer moving and then apply the trailer brake controller by hand to be sure the brakes are working. This lets you check your electrical connection at the same time.
During your trip, check occasionally to be sure that the load is secure, and that the lights and any trailer brakes are still working.

Following distances

Stay at least twice as far behind the vehicle ahead as you would when driving your vehicle without a trailer. This can help you avoid situations that require heavy braking and sudden turns.

Passing

You'll need more passing distance up ahead when you're towing a trailer. And, because of the increased vehicle length, you'll need to go much farther beyond the passed vehicle before you can return to your lane. Due to the added load to the engine when going uphill the vehicle may also take longer to pass than it would on flat ground.

Backing up

Hold the bottom of the steering wheel with one hand. Then, to move the trailer to the left, just move your hand to the left. To move the trailer to the right, move your hand to the right. Always back up slowly and, if possible, have someone guide you.

Making turns

When you're turning with a trailer, make wider turns than normal. Do this so your trailer won't strike soft shoulders, curbs, road signs, trees, or other objects near the edge of the road. Avoid jerky or sudden maneuvers. Signal well in advance before turning or lane changes.

Turn signals when towing a trailer

When you tow a trailer, your vehicle has to have a different turn signal flasher and extra wiring. The green arrows on your instrument panel will flash whenever you signal a turn or lane change. Properly connected, the trailer lights will also flash to alert other drivers you're about to turn, change lanes, or stop.

When towing a trailer, the green arrows on your instrument panel will flash for turns even if the bulbs on the trailer are burned out. Thus, you may think drivers behind you are seeing your signals when, in fact, they are not. It is important to check occasionally to be sure the trailer bulbs are still working. You must also check the lights every time you disconnect and then reconnect the wires.

Do not connect a trailer lighting system directly to your vehicle's lighting system. Use only an approved trailer wiring harness.

Have yourself assisted by a professional workshop in installing the wiring harness.

Kia recommends to visit an authorized Kia dealer/service partner.

⚠ WARNING

Failure to use an approved trailer wiring harness could result in damage to the vehicle electrical system and/or personal injury.

Driving on grades

Reduce speed and shift to a lower gear before you start down a long or steep downgrade. If you don't shift down, you might have to use your brakes so much that they would get hot and no longer operate efficiently.

On a long uphill grade, shift down and reduce your speed to around 70 km/h (45 mph) to reduce the possibility of engine and transaxle overheating.

If your trailer weighs more than the maximum trailer weight without trailer brakes and you have an automatic transaxle, you should drive in D (Drive) when towing a trailer.

Operating your vehicle in D (Drive) when towing a trailer will minimize heat build up and extend the life of your transaxle.

⚠ CAUTION

- **When towing a trailer on steep grades (in excess of 6%) pay close attention to the engine coolant temperature gauge to ensure the engine does not overheat.**
  If the needle of the coolant temperature gauge moves across the dial towards "130/H (HOT)", pull over and stop as soon as it is safe to do so, and allow the engine to idle until it cools down. You may proceed once the engine has cooled sufficiently.
- **You must decide driving speed depending on trailer weight and uphill grade to reduce the possibility of engine and transaxle overheating.**

Parking on hills

Generally, if you have a trailer attached to your vehicle, you should not park your vehicle on a hill. People can be seriously or fatally injured, and both your vehicle and the trailer can be damaged if they unexpectedly roll down hill.

⚠ WARNING

■ Parking on a hill

Parking your vehicle on a hill with a trailer attached could cause serious injury or death, should the trailer break loose or the brake stops working.
Do not apply the accelerator pedal to hold the vehicle on an uphill.

However, if you ever have to park your trailer on a hill, here is how to do it:

1. Pull the vehicle into the parking space. Turn the steering wheel in the direction of the curb (right if headed down hill, left if headed up hill).
2. If the vehicle has an automatic transaxle, place the car in P (Park).
3. Set the parking brake and shut off the vehicle.
4. Place chocks under the trailer wheels on the down hill side of the wheels.
5. Start the vehicle, hold the brakes, shift to neutral, release the parking brake and slowly release the brakes until the trailer chocks absorb the load.
6. Reapply the brakes, reapply the parking brake and shift the vehicle to P (Park) for automatic transaxle.
7. Shut off the vehicle and release the vehicle brakes but leave the parking brake set.

⚠ WARNING

■ Parking brake

It can be dangerous to get out of your vehicle if the parking brake is not firmly set.
If you have left the engine running, the vehicle can move suddenly. You or others could be seriously or fatally injured.

When you are ready to leave after parking on a hill

1. With Automatic Transaxle in P (Park), apply your brakes and hold the brake pedal down while you:
   • Start your engine;

- Shift into gear; and
- Release the parking brake.

2. Slowly remove your foot from the brake pedal.
3. Drive slowly until the trailer is clear of the chocks.
4. Stop and have someone pick up and store the chocks.

Maintenance when trailer towing

Your vehicle will need service more often when you regularly pull a trailer. Important items to pay particular attention to include engine oil, automatic transaxle fluid, axle lubricant and cooling system fluid. Brake condition is another important item to frequently check. Each item is covered in this manual, and the Index will help you find them quickly. If you're trailering, it is a good idea to review these sections before you start your trip.

Do not forget to also maintain your trailer and hitch. Follow the maintenance schedule that accompanied your trailer and check it periodically. Preferably, conduct the check at the start of each day's driving. Most importantly, all hitch nuts and bolts should be tight.

⚠ CAUTION

- **Due to higher load during trailer usage, overheating might occur in hot days or during uphill driving. If the coolant gauge indicates overheating, switch off the air conditioner and stop the vehicle in a safe area to cool down the engine.**
- **When towing check transaxle fluid more frequently.**
- **If your vehicle is not equipped with an air conditioner, you should install a condenser fan to improve engine performance when towing a trailer.**

If you do decide to pull a trailer

Here are some important points if you decide to pull a trailer:

- Consider using a sway control. You can ask a hitch dealer about sway control.
- Do not do any towing with your car during its first 2,000 km (1,200 miles) in order to allow the engine to properly break in. Failure to heed this caution may result in serious engine or transaxle damage.
- When towing a trailer, Kia recommends that you consult an authorized Kia dealer/service partner on additional requirements such as a towing kit, etc.
- Always drive your vehicle at a moderate speed (less than 100 km/h (60 mph)).
- On a long uphill grade, do not exceed 70 km/h (45 mph) or the posted towing speed limit, whichever is lower.
- The chart contains important considerations that have to do with weight:

For Europe and Australia only (Except Russia)

Item		Gasoline Engine		Diesel Engine
		Theta II 2.0L T-GDI	Lambda II PE 3.3L T-GDI	R2.2
Maximum trailer weight kg (lbs.)	Without brake System	750 (1,653)		
	With brake System	1,500 (3,306)		
Maximum permissible static vertical load on the coupling device kg (lbs.)		75 (165)		
Recommended distance from rear wheel center to coupling point mm (inch)		1,195 (47.0)		

Weight of the trailer

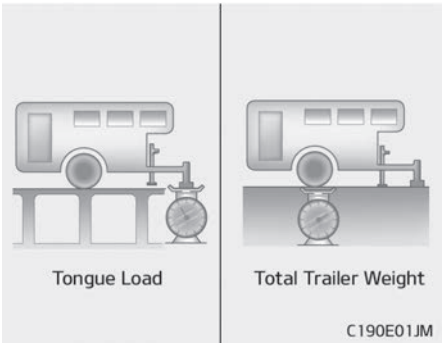

What is the maximum safe weight of a trailer? It should never weigh more than the maximum trailer weight with trailer brakes. But even that can be too heavy.
It depends on how you plan to use your trailer. For example, speed, altitude, road grades, outside temperature and how often your vehicle is used to pull a trailer are all important. The ideal trailer weight can also depend on any special equipment that you have on your vehicle.

Weight of the trailer tongue

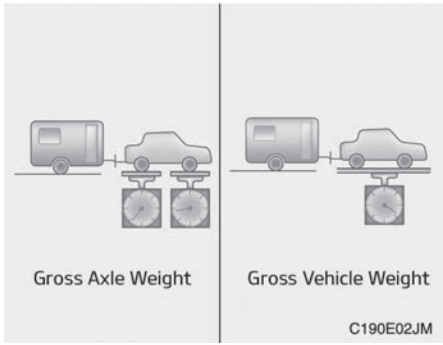

The tongue load of any trailer is an important weight to measure because it affects the total gross vehicle weight (GVW) of your vehicle. This weight includes the curb weight of the vehicle, any cargo you may carry in it, and the people who will be riding in the vehicle. And if you will tow a trailer, you must add the tongue load to the GVW because your vehicle will also be carrying that weight.
The trailer tongue should weigh a maximum of 10% of the total loaded trailer weight, within the limits of the maximum permissible trailer tongue load.

After you've loaded your trailer, weigh the trailer and then the tongue, separately, to see if the weights are proper. If they aren't, you may be able to correct them simply by moving some items around in the trailer.

⚠ WARNING

■ Trailer

- **Never load a trailer with more weight in the rear than in the front. The front should be loaded with approximately 60% of the total trailer load; the rear should be loaded with approximately 40% of the total trailer load.**
- **Never exceed the maximum weight limits of the trailer or trailer towing equipment. Improper loading can result in damage to your vehicle and/or personal injury. Check weights and loading at a commercial scale or highway patrol office equipped with scales.**
- **An improperly loaded trailer can cause loss of vehicle control.**

✻ NOTICE

With increasing altitude the engine performance decreases. From 1,000 m above sea level and for every 1,000 m thereafter 10% of vehicle/trailer weight (trailer weighter + gross vehicle weight) must be deducted.

VEHICLE WEIGHT

This section will guide you in the proper loading of your vehicle and/or trailer, to keep your loaded vehicle weight within its design rating capability, with or without a trailer. Properly loading your vehicle will provide maximum return of the vehicle design performance. Before loading your vehicle, familiarize yourself with the following terms for determining your vehicle's weight ratings, with or without a trailer, from the vehicle's specifications and the certification label:

Base curb weight

This is the weight of the vehicle including a full tank of fuel and all standard equipment. It does not include passengers, cargo, or optional equipment.

Vehicle curb weight

This is the weight of your new vehicle when you picked it up from your dealer plus any aftermarket equipment.

Cargo weight

This figure includes all weight added to the Base Curb Weight, including cargo and optional equipment.

GAW (Gross axle weight)

This is the total weight placed on each axle (front and rear) - including vehicle curb weight and all payload.

GAWR (Gross axle weight rating)

This is the maximum allowable weight that can be carried by a single axle (front or rear). These numbers are shown on the certification label. The total load on each axle must never exceed its GAWR.

GVW (Gross vehicle weight)

This is the Base Curb Weight plus actual Cargo Weight plus passengers.

GVWR (Gross vehicle weight rating)

This is the maximum allowable weight of the fully loaded vehicle (including all options, equipment, passengers and cargo). The GVWR is shown on the certification label.

Overloading

⚠ WARNING

■ Vehicle weight

The gross axle weight rating (GAWR) and the gross vehicle weight rating (GVWR) for your vehicle are on the certification label attached to the driver's (or front passenger's) door. Exceeding these ratings can cause an accident or vehicle damage. You can calculate the weight of your load by weighing the items (and people) before putting them in the vehicle. Be careful not to overload your vehicle.

What to do in an emergency

Road warning....6-02
Hazard warning flasher....6-02
In case of an emergency while driving....6-03
If the engine stalls at a crossroad or crossing....6-03
If you have a flat tire while driving....6-03
If the engine stalls while driving....6-03
If the engine will not start....6-04
If the engine doesn't turn over or turns over slowly....6-04
If the engine turns over normally but does not start....6-04
Emergency starting....6-05
Jump starting....6-05
Push-starting....6-06
If the engine overheats....6-07
Tire pressure monitoring system (TPMS)....6-08
Check tire pressure....6-08
Low tire pressure telltale....6-09
TPMS (Tire pressure monitoring system) malfunction indicator....6-11
Changing a tire with TPMS....6-11
If you have a flat tire (with spare tire)....6-14
Jack and tools....6-14
Removing and storing the spare tire....6-15
Changing tires....6-15
Jack label....6-21
EC declaration of conformity for jack....6-22
If you have a flat tire (with Tire Mobility Kit)....6-23
Introduction....6-24
Notes on the safe use of the Tire Mobility Kit....6-24
Components of the Tire Mobility Kit (TMK)....6-26
Using the Tire Mobility Kit....6-27
Distributing the sealant....6-29
Checking the tire inflation pressure....6-29
Technical data....6-30
Towing....6-31
Towing service....6-31
Removable towing hook....6-32
Emergency Towing....6-33
Emergency commodity....6-36
Fire extinguisher....6-36
First aid kit....6-36
Triangle reflector....6-36
Tire pressure gauge....6-36

ROAD WARNING

Hazard warning flasher

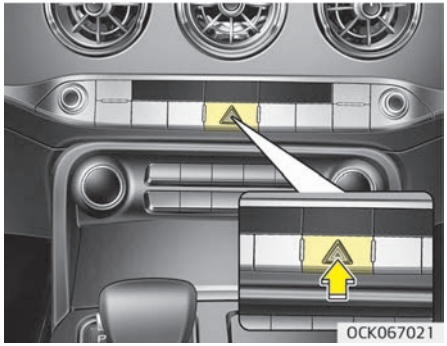

The hazard warning flasher serves as a warning to other drivers to exercise extreme caution when approaching, overtaking, or passing your vehicle.
It should be used whenever emergency repairs are being made or when the vehicle is stopped near the edge of a roadway.
Depress the flasher switch with the Engine start/stop button is in any position. The flasher switch is located in the center console switch panel. All turn signal lights will flash simultaneously.

- The hazard warning flasher operates whether your vehicle is running or not.
- The turn signals do not work when the hazard flasher is on.
- Care must be taken when using the hazard warning flasher while the vehicle is being towed.

IN CASE OF AN EMERGENCY WHILE DRIVING

If the engine stalls at a crossroad or crossing

If the engine stalls at a crossroad or crossing, set the shift lever in the N (Neutral) position and then push the vehicle to a safe place.

If you have a flat tire while driving

1. Take your foot off the accelerator pedal and let the vehicle slow down while driving straight ahead. Do not apply the brakes immediately or attempt to pull off the road as this may cause a loss of control. When the vehicle has slowed down to such a speed that it is safe to do so, brake carefully and pull off the road. Drive off the road as far as possible and park on a firm level ground. If you are on a divided highway, do not park in the median area between the two traffic lanes.
2. When the vehicle is stopped, turn on your emergency hazard flashers, set the parking brake and put the transaxle in P.
3. Have all passengers get out of the vehicle. Be sure they all get out on the side of the vehicle that is away from traffic.
4. When changing a flat tire, follow the instruction provided later in "If you have a flat tire (with spare tire, if equipped)" on page 6-14 or "If you have a flat tire (with Tire Mobility Kit, if equipped)" on page 6-23.

If the engine stalls while driving

1. Reduce your speed gradually, keeping a straight line. Move cautiously off the road to a safe place.
2. Turn on your emergency flashers.
3. Try to start the engine again. If your vehicle does not start, consult a professional workshop. Kia recommends to consult an authorized Kia dealer/service partner.

IF THE ENGINE WILL NOT START

If the engine doesn't turn over or turns over slowly

1. Be sure the shift lever is in N (Neutral) or P (Park) and the emergency brake is set.
2. Check the battery connections to be sure they are clean and tight.
3. Turn on the interior light. If the light dims or goes out when you operate the starter, the battery is discharged.
4. Check the starter connections to be sure they are securely tightened.
5. Do not push or pull the vehicle to start it. See instructions for "Jump starting" on page 6-05.

⚠ WARNING

If the engine will not start, do not push or pull the vehicle to start it. This could result in a collision or cause other damage. In addition, push or pull starting may cause the catalytic converter to be overloaded and create a fire hazard.

If the engine turns over normally but does not start

1. Check the fuel level.
2. With the Engine Start/Stop button in the LOCK /OFF position, check all connectors at the ignition coils and spark plugs. Reconnect any that may be disconnected or loose.
3. Check the fuel line in the engine compartment.
4. If the engine still does not start, call a professional workshop. Kia recommends to call an authorized Kia dealer/service partner.

EMERGENCY STARTING

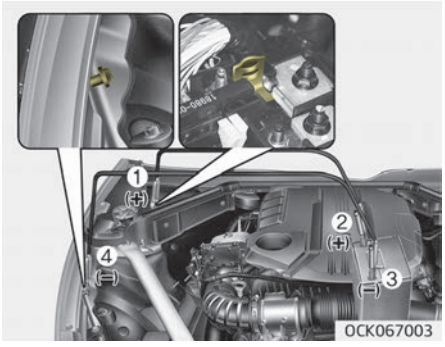

Connect cables in numerical order and disconnect in reverse order.

Jump starting

Jump starting can be dangerous if done incorrectly. Therefore, to avoid harm to yourself or damage to your vehicle or battery, follow the jump starting procedures. If in doubt, we strongly recommend that you have a competent technician or towing service jump start your vehicle.

⚠ CAUTION

Use only a 12-volt jumper system. You can damage a 12-volt starting motor, ignition system, and other electrical parts beyond repair by use of a 24- volt power supply (either two 12-volt batteries in series or a 24-volt motor generator set).

⚠ WARNING

■ Battery

Never attempt to check the electrolyte level of the battery as this may cause the battery to rupture or explode causing serious injury.

⚠ WARNING

■ Battery

(Continued)

(Continued)

- **Keep all flames or sparks away from the battery. The battery produces hydrogen gas which may explode if exposed to flame or sparks.**
  If these instructions are not followed exactly, serious personal injury and damage to the vehicle may occur! If you are not sure how to follow this procedure, seek qualified assistance. Automobile batteries contain sulfuric acid. This is poisonous and highly corrosive. When jump starting, wear protective glasses and be careful not to get acid on yourself, your clothing or on the vehicle.
- **Do not attempt to jump start the vehicle if the discharged battery is frozen or if the electrolyte level is low; the battery may rupture or explode.**
- **Do not allow the (+) and (−) jumper cables to touch. It may cause sparks.**
- **The battery may rupture or explode when you jump start with a low or frozen battery.**

Jump starting procedure

1. Make sure the booster battery is 12-volt and that its negative terminal is grounded.
2. If the booster battery is in another vehicle, do not allow the vehicles come in contact.
3. Turn off all unnecessary electrical loads.
4. Connect the jumper cables in the exact sequence shown in the illustration. First connect one end of a jumper cable to the positive terminal of the connector (1), then connect the other end to the positive terminal on the booster battery (2).
   Proceed to connect one end of the other jumper cable to the negative terminal of the booster battery (3), then the other end to a solid, stationary, metallic point away from the battery (4). Do not connect it to or near any part that moves when the engine is cranked.
   Do not allow the jumper cables to contact anything except the correct battery terminals or the correct ground. Do not lean over the battery when making connections.

⚠ CAUTION

■ Battery cables

Do not connect the jumper cable from the negative terminal of the booster battery to the negative terminal of the discharged battery. This can cause the discharged battery to overheat and crack, releasing battery acid.
Make sure to connect one end of the jumper cable to the negative terminal of the booster battery, and the other end to a metallic point, far away from the battery.

5. Start the engine of the vehicle with the booster battery and let it run at 2,000 rpm, then start the engine of the vehicle with the discharged battery.

If the cause of your battery discharging is not apparent, have the system checked by a professional workshop. Kia recommends to visit an authorized Kia dealer/service partner.

Push-starting

Vehicles equipped with automatic transaxle cannot be push-started.

Follow the directions in “Jump starting” on page 6-05.

⚠ WARNING

Never tow a vehicle to start it because the sudden surge forward when the engine starts could cause a collision with the tow vehicle.

IF THE ENGINE OVERHEATS

If your temperature gauge indicates overheating, you will experience a loss of power, or hear loud pinging or knocking, the engine is probably too hot. If this happens, you should:

1. Pull off the road and stop as soon as it is safe to do so.
2. Place the shift lever in P and set the parking brake. If the air conditioning is on, turn it off.
3. If engine coolant is running out under the vehicle or steam is coming out from the hood, stop the engine. Do not open the hood until the coolant has stopped running or the steaming has stopped. If there is no visible loss of engine coolant and no steam, leave the engine running and check to be sure the engine cooling fan is operating. If the fan is not running, turn the engine off.
4. Check to see if the water pump drive belt is missing. If it is not missing, check to see that it is tight.
   If the drive belt seems to be satisfactory, check for coolant leaking from the radiator, hoses or under the vehicle. (If the air conditioning had been in use, it is normal for cold water to be draining from it when you stop).

⚠ WARNING

While the engine is running, keep hair, hands and clothing away from moving parts such as the fan and drive belts to prevent injury.

5. If the water pump drive belt is broken or engine coolant is leaking out, stop the engine immediately and call a professional workshop. Kia recommends to call an authorized Kia dealer/service partner.

⚠ WARNING

Do not remove the radiator cap when the engine is hot. This can allow coolant to blow out of the opening and cause serious burns.

6. If you cannot find the cause of the overheating, wait until the engine temperature has returned to normal. Then, if coolant has been lost, carefully add coolant to the reservoir to bring the fluid level in the reservoir up to the halfway mark.
7. Proceed with caution, keeping alert for further signs of overheating. If overheating happens again, call a professional workshop. Kia recommends to call an authorized Kia dealer/service partner.

⚠ CAUTION

- **Serious loss of coolant indicates there is a leak in the cooling system. In this case, have the system checked by a professional workshop. Kia recommends to visit an authorized Kia dealer/service partner.**
- **When the engine overheats from low engine coolant, suddenly adding engine coolant may cause cracks in the engine. To prevent damage, add engine coolant slowly in small quantities.**

TIRE PRESSURE MONITORING SYSTEM (TPMS) (IF EQUIPPED)

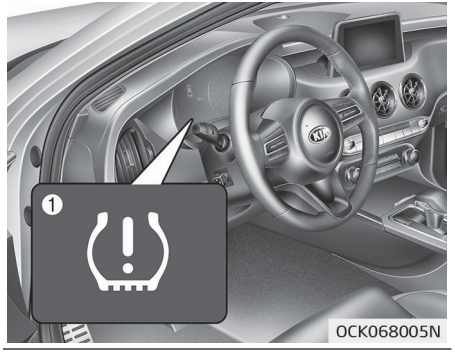

1. Low tire pressure telltale / TPMS malfunction indicator
2. Low tire pressure position telltale (Shown on the LCD display)

Check tire pressure

- You can check the tire pressure in the information mode on the cluster.
  - Refer to "User settings mode" on page 4-64.
- Tire pressure is displayed 1~2 minutes later after driving.
- If tire pressure is not displayed when the vehicle is stopped, "Drive to display" message displays. After driving, check the tire pressure.
- You can change the tire pressure unit in the user settings mode on the cluster.
  - psi, kpa, bar (Refer to "User settings mode" on page 4-64).

Each tire, including the spare (if provided), should be checked monthly when cold and inflated to the inflation pressure recommended by the vehicle manufacturer on the vehicle placard or tire inflation pressure label.
(If your vehicle has tires of a different size than the size indicated on the vehicle placard or tire inflation pressure label, you should determine the proper tire inflation pressure for those tires.)

As an added safety feature, your vehicle has been equipped with a tire pressure monitoring system (TPMS) that illuminates a low tire pressure telltale when one or more of your tires is significantly under-inflated. Accordingly, when the low tire pressure telltale illuminates, you should stop and check your tires as soon as possible, and inflate them to the proper pressure. Driving on a significantly under-inflated tire causes the tire to overheat and can lead to tire failure. Under-inflation also reduces fuel efficiency and tire tread life, and may affect the vehicle's handling and stopping ability.
Please note that the TPMS is not a substitute for proper tire maintenance, and it is the driver's responsibility to maintain correct tire pressure, even if under-inflation has not reached the level to trigger illumination of the TPMS low tire pressure telltale.

Your vehicle has also been equipped with a TPMS malfunction indicator to indicate when the system is not operating properly. The TPMS malfunction indicator is combined with the low tire pressure telltale. When the system detects a malfunction, the telltale will flash for approximately 1 minute and then remain continuously illuminated. This sequence will continue upon subsequent vehicle start-ups as long as the malfunction exists. When the TPMS malfunction indicator remains illuminated after blinking for approximately 1 minute, the system may not be able to detect or signal low tire pressure as intended.
TPMS malfunctions may occur for a variety of reasons, including the installation of replacement or alternate tires or wheels on the vehicle that prevent the TPMS from functioning properly. Always check the TPMS malfunction telltale after replacing one or more tires or wheels on your vehicle to ensure that the replacement or alternate tires and wheels allow the TPMS to continue to function properly.

✻ NOTICE

If any of the below happens, have the system checked by a professional workshop. Kia recommends to visit an authorized Kia dealer/service partner.

1. The low tire pressure telltale/ TPMS malfunction indicator do not illuminate for 3 seconds when the Engine Start/Stop button turned to the ON position or engine is running.
2. The TPMS malfunction indicator remains illuminated after blinking for approximately 1 minute.
3. The Low tire pressure position telltale remains illuminated.

Low tire pressure telltale



WBH-11B

■ Low tire pressure position information

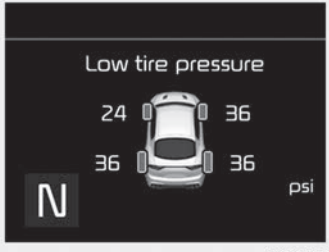

OCK067025LB

When the tire pressure monitoring system warning indicators are illuminated and warning massage displayed on the cluster LCD display, one or more of your tires is significantly under-inflated.
The low tire pressure position telltale light will indicate which tire is significantly under-inflated by illuminating the corresponding position light.
If either telltale illuminates, immediately reduce your speed, avoid hard cornering and anticipate increased stopping distances. You should stop and check your tires as soon as possible. Inflate the tires to the proper pressure as indicated on the vehicle's placard or tire inflation pressure label located on the driver's side center pillar outer panel. If you cannot reach a service station or if the tire cannot hold the newly added air, replace the low pressure tire with a spare tire.
If you drive the vehicle for about 10 minutes at speeds above 25 km/h after replaceing the low pressure tire with the spare tire, one of the following will happen:

- The TPMS malfunction indicator may blink for approximately 1 minute and then remain continuously illuminated because the TPMS sensor is not mounted on the spare wheel. (changed tire equipped with a sensor not in the vehicle)
- The TPMS malfunction indicator will remain continuously illuminated while driving because the TPMS sensor is not mounted on the spare wheel. (changed tire equipped with a sensor in the vehicle)

⚠ CAUTION

- **In winter or cold weather, the low tire pressure telltale may illuminate if the tire pressure was adjusted to the recommended tire inflation pressure in warm weather. It does not mean your TPMS is malfunctioning because the decreased temperature leads to a lowering of tire pressure.**

(Continued)

(Continued)

- **When you drive your vehicle from a warm area to a cold area or from a cold area to a warm area, or the outside temperature is higher or lower, you should check the tire inflation pressure and adjust the tires to the recommended tire inflation pressure.**
- **When filling tires with more air, conditions to turn off the low tire pressure telltale may not be met. This is because a tire inflator has a margin of error in performance. The low tire pressure telltale will be turned off if the tire pressure is above the recommended tire inflation pressure.**

⚠ WARNING

■ Low pressure damage

Significantly low tire pressure makes the vehicle unstable and can contribute to loss of vehicle control and increased braking distances.

(Continued)

(Continued)

Continued driving on low pressure tires can cause the tires to overheat and fail.

TPMS (Tire pressure monitoring system) malfunction indicator



The TPMS malfunction indicator will illuminate after it blinks for approximately one minute when there is a problem with the Tire Pressure Monitoring System.
In this case, have the system checked by a professional workshop to determine the cause of the problem. Kia recommends to visit an authorized Kia dealer/service partner.

✻ NOTICE

If there is a malfunction with the TPMS, the low tire pressure position telltale will not be displayed even though the vehicle has an under-inflate tire.

⚠ CAUTION

- **The TPMS malfunction indicator may blink for approximately 1 minute and then remain continuously illuminated if the vehicle is moving around electric power supply cables or radios transmitter such as at police stations, government and public offices, broadcasting stations, military installations, airports, or transmitting towers, etc. This can interfere with normal operation of the Tire Pressure Monitoring System (TPMS).**
- **The TPMS malfunction indicator may blink for approximately 1 minute and then remain continuously illuminated if snow chains are used or some separate electronic devices such as notebook computer, mobile charger, remote starter or navigation etc., are used in the vehicle.**
  This can interfere with normal operation of the Tire Pressure Monitoring System (TPMS).

Changing a tire with TPMS

If you have a flat tire, the low Tire Pressure and Position telltales will come on. In this case, have the system checked by a professional workshop. Kia recommends to visit an authorized Kia dealer/service partner.

⚠ CAUTION

We recommend that you use the sealant approved by Kia.
The sealant on the tire pressure sensor and wheel shall be eliminated when you replace the tire with a new one.

Each wheel is equipped with a tire pressure sensor mounted inside the tire behind the valve stem. You must use TPMS specific wheels. Have your tires serviced by a professional workshop. Kia recommends to visit an authorized Kia dealer/service partner.
If you drive the vehicle for about 10 minutes at speeds above 25 km/h after replaceing the low pressure tire with the spare tire, one of the following will happen:

- The TPMS malfunction indicator may blink for approximately 1 minute and then remain continuously illuminated because the TPMS sensor is not mounted on the spare wheel. (changed tire equipped with a sensor not in the vehicle)
- The TPMS malfunction indicator will remain continuously illuminated while driving because the TPMS sensor is not mounted on the spare wheel. (changed tire equipped with a sensor in the vehicle)

You may not be able identify a low tire by simply looking at it. Always use a good quality tire pressure gauge to measure the tire's inflation pressure. Please note that a tire that is hot (from being driven) will have a higher pressure measurement than a tire that is cold (from sitting stationary for at least 3 hours and driven less than 1.6 km (1 mile) during that 3 hour period).
Allow the tire to cool before measuring the inflation pressure. Always be sure the tire is cold before inflating to the recommended pressure.

A cold tire means the vehicle has been sitting for 3 hours and driven for less than 1.6 km (1 mile) in that 3 hour period.

⚠ CAUTION

We recommend that you use the sealant approved by Kia if your vehicle is equipped with a Tire Pressure Monitoring System. The liquid sealant can damage the tire pressure sensors.

⚠ WARNING

■ TPMS

- **The TPMS cannot alert you to severe and sudden tire damage caused by external factors such as nails or road debris.**
- **If you feel any vehicle instability, immediately take your foot off the accelerator, apply the brakes gradually and with light force, and slowly move to a safe position off the road.**

⚠ WARNING

■ Protecting TPMS

Tampering with, modifying, or disabling the Tire Pressure Monitoring System (TPMS) components may interfere with the system's ability to warn the driver of low tire pressure conditions and/or TPMS malfunctions. Tampering with, modifying, or disabling the Tire Pressure Monitoring System (TPMS) components may void the warranty for that portion of the vehicle.

⚠ WARNING

■ For EUROPE

- **Do not modify the vehicle, it may interfere with the TPMS function.**
- **The wheels on the market do not have a TPMS sensor.**
  For your safety, use parts for replacement from a professional workshop. Kia recommends to visit an authorized Kia dealer/service partner.

(Continued)

(Continued)

- **If you use the wheels on the market, use a TPMS sensor approved by an authorized Kia dealer.**
  If your vehicle is not equipped with a TPMS sensor or TPMS does not work properly, you may fail the periodic vehicle inspection conducted in your country.

❋ All vehicles sold in the EUROPE market during below period must be equipped with TPMS.

- **New model vehicle:**
  Nov. 1, 2012 ~
- **Current model vehicle:**
  Nov. 1, 2014~ (Based on vehicle registrations)

IF YOU HAVE A FLAT TIRE (WITH SPARE TIRE, IF EQUIPPED)

Jack and tools

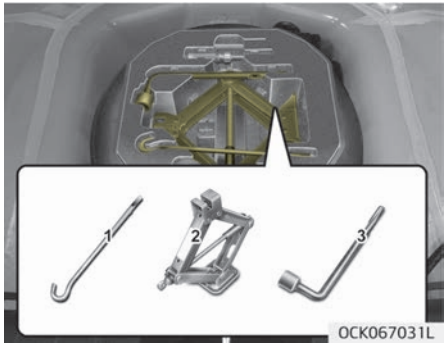

The jack, jack handle, wheel lug nut wrench are stored in the luggage compartment.
Pull up the luggage box cover to reach this equipment.

1. Jack handle
2. Jack
3. Wheel lug nut wrench

Jacking instructions

The jack is provided for emergency tire changing only.

To prevent the jack from "rattling" while the vehicle is in motion, store it properly.
Follow jacking instructions to reduce the possibility of personal injury.

⚠ WARNING

■ Changing tires

- **Never attempt vehicle repairs in the traffic lanes of a public road or highway.**
- **Always move the vehicle completely off the road and onto the shoulder before trying to change a tire. The jack should be used on firm level ground. If you cannot find a firm level place off the road, call a towing service company for assistance.**
- **Be sure to use the correct front and rear jacking positions on the vehicle; never use the bumpers or any other part of the vehicle for jacking support.**
- **The vehicle can roll off the jack causing serious injury or death.**

(Continued)

(Continued)

- **Do not get under a vehicle that is supported by a jack.**
- **Do not start or run the engine while the vehicle is on the jack.**
- **Do not allow anyone remain in the vehicle while it is on the jack.**
- **Make sure any children present are in a secure place away from the road and from the vehicle to be raised with the jack.**

Removing and storing the spare tire

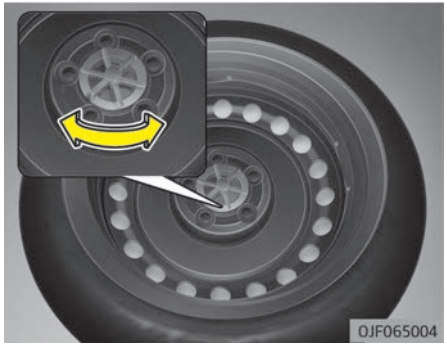

Turn the tire hold-down wing bolt counterclockwise.
Store the tire in the reverse order of removal.
To prevent the spare tire and tools from "rattling" while the vehicle is in motion, store them properly.



If it is hard to loosen the tire hold-down wing bolt by hand, you can loosen it easily using the jack handle.

1. Put the jack handle (1) inside of the tire hold-down wing bolt.
2. Turn the tire hold-down wing bolt counterclockwise with the jack handle.

⚠ CAUTION

Turn the engine off and wait until it cools down, or luggage room floor surface may be hot. Wear gloves when removing the spare tire from the luggage room.

Changing tires



1. Park on a level surface and apply the parking brake firmly.
2. Move the shift lever into P (Park) with automatic transaxle.
3. Activate the hazard warning flasher.



4. Remove the wheel lug nut wrench, jack, jack handle, and spare tire from the vehicle.
5. Block both the front and rear of wheel that is diagonally opposite the jack position.

⚠ WARNING

■ Changing a tire
(Continued)

(Continued)

- **To prevent vehicle movement while changing a tire, always set the parking brake fully, and always block the wheel diagonally opposite the wheel being changed.**
- **We recommend that the wheels of the vehicle be chocked, and that no person remain in a vehicle that is being jacked.**



6. Loosen the wheel lug nuts counterclockwise one turn each, but do not remove any nut until the tire has been raised off the ground.

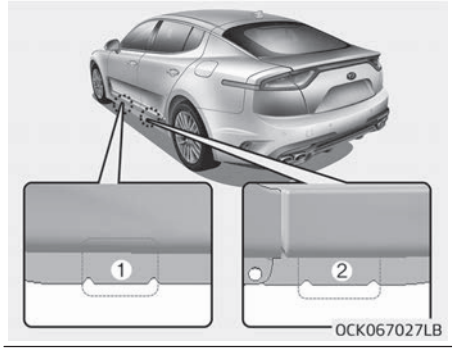

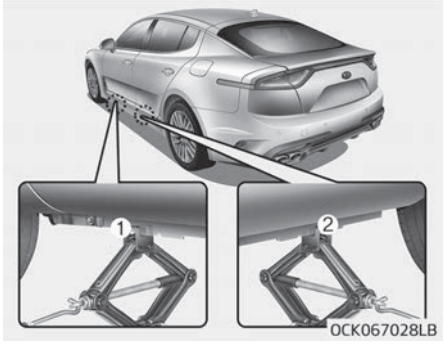

7. Place the jack at the front(1) or rear(2) jacking position closest to the tire you are changing. Place the jack at the designated locations under the frame. The jacking positions are plates welded to the

frame with two tabs and a raised dot to index with the jack.

⚠ WARNING

■ Jack location

To reduce the possibility of injury, be sure to use only the jack provided with the vehicle and in the correct jack position; never use any other part of the vehicle for jack support.

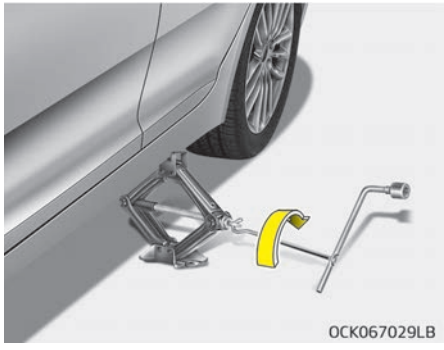

8. Insert the jack handle into the jack and turn it clockwise, raising the vehicle until the tire just clears the ground. This measurement is approximately 30 mm (1.2 in). Before removing the wheel lug nuts, make sure the vehicle is stable and that there is no chance for movement or slippage.
9. Loosen the wheel nuts and remove them with your fingers. Slide the wheel off the studs and lay it flat so it cannot roll away. To put the wheel on the hub, pick up the spare tire, line up the holes with the studs and slide the wheel onto them.
   If this is difficult, tip the wheel slightly and get the top hole in the wheel lined up with the top stud. Then jiggle the wheel back and forth until the wheel can be slid over the other studs.

⚠ WARNING

Wheels may have sharp edges. Handle them carefully to avoid possible severe injury. Before putting the wheel into place, be sure that there is nothing on the hub or wheel (such as mud, tar, gravel, etc.) that interferes with the wheel from fitting solidly against the hub.

(Continued)

(Continued)

If there is, remove it. If there is not good contact on the mounting surface between the wheel and hub, the wheel nuts could come loose and cause the loss of a wheel. Loss of a wheel may result in loss of control of the vehicle. This may cause serious injury or death.

10. To reinstall the wheel, hold it on the studs, put the wheel nuts on the studs and tighten them finger tight. Jiggle the tire to be sure it is completely seated, then tighten the nuts as much as possible with your fingers again.
11. Lower the vehicle to the ground by turning the wheel nut wrench counterclockwise.



Then position the wrench as shown in the drawing and tighten the wheel nuts. Be sure the socket is seated completely over the nut. Do not stand on the wrench handle or use an extension pipe over the wrench handle. Go around the wheel tightening every other nut until they are all tight. Then double-check each nut for tightness.
After changing wheels, have the system checked by a professional workshop. Kia recommends to visit an authorized Kia dealer/service partner.
Wheel nut tightening torque:
Steel wheel & aluminum alloy wheel: 11~13 kgf·m (79~94 lbf·ft, 107~127N·m)

If you have a tire gauge, remove the valve cap and check the air pressure. If the pressure is lower than recommended, drive slowly to the nearest service station and inflate to the correct pressure. If it is too high, adjust it until it is correct. Always reinstall the valve cap after checking or adjusting tire pressure. If the cap is not replaced, air may leak from the tire. If you lose a valve cap, buy another and install it as soon as possible.
After you have changed wheels, always secure the flat tire in its place and return the jack and tools to their proper storage locations.

⚠ CAUTION

Your vehicle has metric threads on the wheel studs and nuts. Make certain during wheel removal that the same nuts that were removed are reinstalled – or, if replaced, that nuts with metric threads and the same chamfer configuration are used. Installation of a non-metric thread nut on a metric stud or vice-versa will not secure the wheel to the hub properly and will damage the stud so that it must be replaced.

(Continued)

(Continued)

Note that most lug nuts do not have metric threads. Be sure to use extreme care in checking for thread style before installing aftermarket lug nuts or wheels. If in doubt, consult a professional workshop. Kia recommends to consult an authorized Kia dealer/service partner.

⚠ WARNING

■ Wheel studs

If the studs are damaged, they may lose their ability to retain the wheel. This could lead to the loss of the wheel and a collision resulting in serious injuries.

To prevent the jack, jack handle, wheel lug nut wrench and spare tire from rattling while the vehicle is in motion, store them properly.

⚠ WARNING

■ Inadequate spare tire pressure

Check the inflation pressures as soon as possible after installing the spare tire. Adjust it to the specified pressure, if necessary. Refer to "Tires and wheels" on page 8-09.

Important - use of compact spare tire (if equipped)

Your vehicle is equipped with a compact spare tire. This compact spare tire takes up less space than a regular-size tire. This tire is smaller than a conventional tire and is designed for temporary use only.

⚠ CAUTION

- **You should drive carefully when the compact spare is in use. The compact spare should be replaced by the proper conventional tire and rim at the first opportunity.**

(Continued)

(Continued)

- **The operation of this vehicle is not recommended with more than one compact spare tire in use at the same time.**

⚠ WARNING

The compact spare tire is for emergency use only. Do not operate your vehicle on this compact spare at the speed over 80 km/h (50 mph). The original tire should be repaired or replaced as soon as possible to avoid failure of the spare possibly leading to personal injury or death.

The compact spare should be inflated to 420 kPa (60 psi, 4.2 bar).

✻ NOTICE

Check the inflation pressure after installing the spare tire. Adjust it to the specified pressure, as necessary.

When using a compact spare tire, observe the following precautions:

- Under no circumstances should you exceed 80 km/h (50 mph); a higher speed could damage the tire.
- Ensure that you drive slowly enough to avoid all hazards. Any road hazard, such as a pothole or debris, could seriously damage the compact spare.
- Any continuous road use of this tire could result in tire failure, loss of vehicle control, and possible personal injury.
- Do not exceed the vehicle's maximum load rating or the load-carrying capacity shown on the sidewall of the compact spare tire.
- Avoid driving over obstacles. The compact spare tire diameter is smaller than the diameter of a conventional tire and reduces the ground clearance approximately 2.5 cm (1 inch), which could result in damage to the vehicle.
- Do not take the vehicle through an automatic car wash while the compact spare tire is installed.
- Do not use tire chains on the temporary compact tire. Because of the smaller size, a tire chain will not fit properly. This could damage the vehicle and result in loss of the chain.

- Temporary compact tire should not be installed on the front axle if the vehicle must be driven in snow or on ice.
- Do not use the temporary compact tire on any other vehicle because this tire has been designed especially for your vehicle.
- The temporary compact tire tread life is shorter than a regular tire. Inspect your temporary compact tire regularly and replace worn compact spare tires with the same size and design, mounted on the same wheel.
- The temporary compact tire should not be used on any other wheels, nor should standard tires, snow tires, wheel covers or trim rings be used with the temporary compact spare wheel. If such use is attempted, damage to these items or other car components may occur.
- Do not use more than one temporary compact tire at a time.
- Do not tow a trailer while the temporary compact tire is installed.

Jack label

■ Example

• Type A

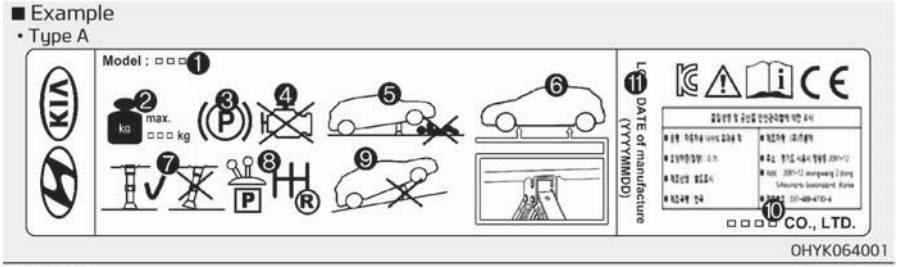

OHYK064001

• Type B

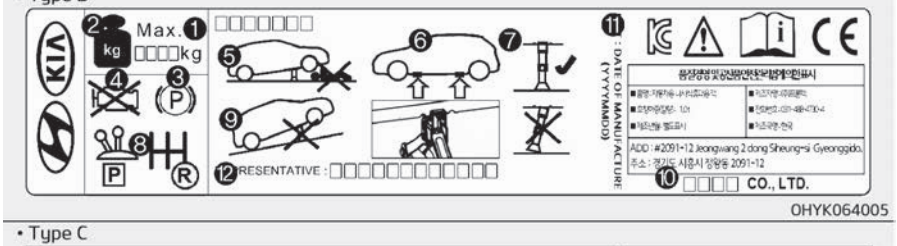

OHYK064005

• Type C



OHYK064002

❊ The actual Jack label in the vehicle may differ from the illustration. For more detailed specifications, refer to the label attached to the jack.

1. Model Name
2. Maximum allowable load
3. When using the jack, set your parking brake.
4. When using the jack, stop the engine.
5. Do not get under a vehicle that is supported by a jack.
6. The designated locations under the frame
7. When supporting the vehicle, the base plate of jack must be vertical under the lifting point.
8. Shift into Reverse gear on vehicles move the shift lever to the P position on vehicles with automatic transmission.
9. The jack should be used on firm level ground.
10. Jack manufacturer
11. Production date
12. Representative company and address

EC declaration of conformity for jack

CE

EC Declaration of Conformity
according to EC Machinery Directive 2006/42/EC

We, **FRONTEC CO., LTD.**
2091-12 Jeongwang 2(i)-dong Siheung-si Gyeonggi-d ,Korea
declare under our sole responsibility that the product

Product : JACK-ASSY
Type Designation(s) : 1200KG, 1000KG, 800KG, 700KG, 500KG
Serial No. : N/A (prototype)
Year of Manufacture : 2013
to which this declaration relates is in conformity with the following standard(s) or other normative document(s);

EN ISO12100 (2010)	Safety of machinery - General principles for design – Risk assessment and risk reduction
EN 1494/A1 (2008)	Mobile or movable jacks and associated lifting equipment

following the provisions of Directive(s);

2006/42/EC	Directive on the approximation of the laws of Member States relating to machinery (OJ L157 Jun, 9, 2006)

Siheung-si Gyeonggi-d ,Korea / 15.07.2013 SOO HONG, MIN President
(Place and date of issue)(Name and signature or equivalent making of authorized person)

* T.C.F Compiling Location:
- Address: PRIBORSKA 280, 739 42 FRYDEK MISTEK,CHLEBOVICE, CZECH REPUBLIC
- Team: Purchase team
- Company name: HANWHA L&C CZECH s.r.o

0UM074110L

IF YOU HAVE A FLAT TIRE (WITH TIRE MOBILITY KIT, IF EQUIPPED)

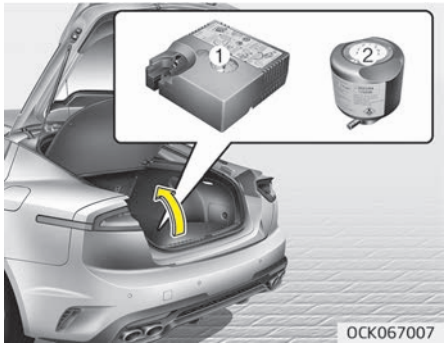

Please read the instructions before using the Tire Mobility Kit.

1. Compressor
2. Sealant bottle

The Tire Mobility Kit is a temporary fix to the tire and have the tire inspected by a professional workshop as soon as possible. Kia recommends to visit an authorized Kia dealer/service partner.

⚠ CAUTION

■ One sealant for one tire

When two or more tires are flat, do not use the tire mobility kit because the one supplied canister of sealant in the Tire Mobility Kit is to only enough sealant for one flat tire.

⚠ WARNING

■ Tire wall

Do not use the Tire Mobility Kit to repair punctures in the tire walls. This can result in an accident due to tire failure.

⚠ WARNING

■ Temporary fix

Have your tire repaired as soon as possible. The tire may lose air pressure at any time after inflating with the Tire Mobility Kit.

⚠ CAUTION

- **When replacing or repairing the tire after using tire sealant, make certain to remove the sealant attached to the inner part of the tire and wheel. If the sealant is not removed, noise and vibration may occur.**
- **We recommend use original Kia manufactured sealant.**
  Using aftermarket sealant may damage the tire pressure detection sensor.
- **If the TPMS warning light illuminates after using the Tire Mobility Kit, have your vehicle inspected by a professional workshop. Kia recommends to contact an authorized Kia dealer/service partner.**
- **When repairing a flat tire with the Tire Mobility Kit (TMK), quickly remove the sealant on the tire pressure sensor and wheel. When installing the repaired tire and wheel, tight- en the wheel nut to a torque value of 11~13kgf·m.**

Introduction

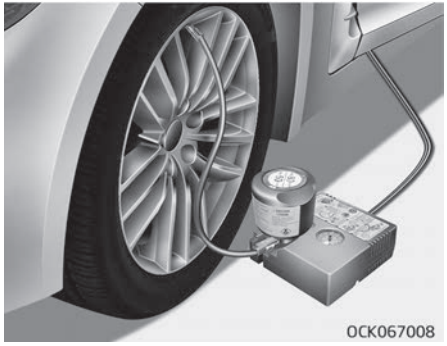

With the Tire Mobility Kit (TMK) you stay mobile even after experiencing a tire puncture.
The system of compressor and sealing compound effectively and comfortably seals most punctures in a passenger car tire caused by nails or similar objects and reinflates the tire.
After you ensured that the tire is properly sealed you can drive cautiously on the tire (up to 200 km (120 miles)) at a max. speed of 80 km/h (50 mph) in order to reach a vehicle or tire dealer to have the tire replaced.

It is possible that some tires, especially with larger punctures or damage to the sidewall, cannot be sealed completely.
Air pressure loss in the tire may adversely affect tire performance.
For this reason, you should avoid abrupt steering or other driving maneuvers, especially if the vehicle is heavily loaded or if a trailer is in use.
The Tire Mobility Kit is not designed or intended as a permanent tire repair method and is to be used for one tire only.
This instruction shows you step by step how to temporarily seal the puncture simply and reliably.
Read “Notes on the safe use of the Tire Mobility Kit” on page 6-24.

⚠ WARNING

Do not use the Tire Mobility Kit if a tire is severely damaged by driving run flat or with insufficient air pressure.
Only punctured areas located within the tread region of the tire can be sealed using the Tire Mobility Kit.

Notes on the safe use of the Tire Mobility Kit

- Park your car at the side of the road so that you can work with the Tire Mobility Kit away from moving traffic. Place your warning triangle in a prominent place to make passing vehicles aware of your location.
- To be sure your vehicle will not move, even when you're on fairly level ground, always set your parking brake.
- Only use the Tire Mobility Kit for sealing/inflation passenger car tires. Do not use on motorcycles, bicycles or any other type of tires.
- Do not remove any foreign objects-such as nails or screws -that have penetrated the tire.
- Before using the Tire Mobility Kit, read the precautionary advice printed on the sealant bottle!
- Provided the car is outdoors, leave the engine running. Otherwise operating the compressor may eventually drain the car battery.
- Never leave the Tire Mobility Kit unattended while it is being used.

- Do not leave the compressor running for more than 10 min. at a time or it may overheat.
- Do not use the Tire Mobility Kit if the ambient temperature is below -30°C (-22°F).
- When the tire and wheel are damaged, do not use Tire Mobility Kit for your safety.

⚠ WARNING

- **If the sealant gets on your skin, wash it with a large amount of water and if it irritates continuously, visit a doctor for examination.**
- **If the sealant gets into your eyes, raise your eyelid and wash for at least 15 minutes. If it irritates continuously, visit a doctor for examination.**

(Continued)

(Continued)

- **If you have drank the sealant, wash the mouth and drink a large amount of water.**
  However, do not give anything to an unconscious person and see the doctor immediately.
  Exposure to the sealant for a long time may cause damage to the bodily tissues.

Components of the Tire Mobility Kit (TMK)

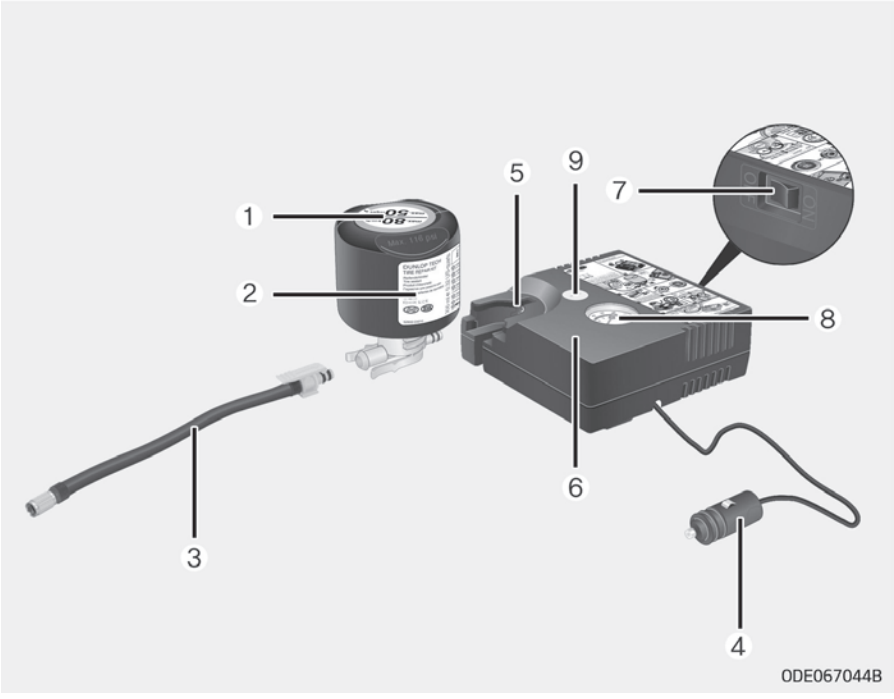

1. Speed restriction label
2. Sealant bottle and label with speed restriction
3. Filling hose from sealant bottle to wheel
4. Connectors and cable for the power outlet direct connection
5. Holder for the sealant bottle
6. Compressor
7. On/off switch
8. Pressure gauge for displaying the tire inflation pressure
9. Button for reducing tire inflation pressure

Connectors and cable are stored in the compressor housing.

⚠ WARNING

■ Expired sealant

Do not use the tire sealant after the sealant has expired (i.e. pasted the expiration date on the sealant container). This can increase the risk of tire failure.

⚠ WARNING

■ Sealant

- **Keep out of reach of children.**
- **Avoid contact with eyes.**
- **Do not swallow.**

✻ NOTICE

The sealant container and insert hose (3) cannot be reused. Purchase an extra after use.

Using the Tire Mobility Kit

1. Detach the speed restriction label (1) from the sealant bottle (2), and place it in a highly visible place inside the vehicle such as on the steering wheel to remind the driver not to drive too fast.
2. Filling the sealant Strictly follow the specified sequence, otherwise the sealant may escape under high pressure.

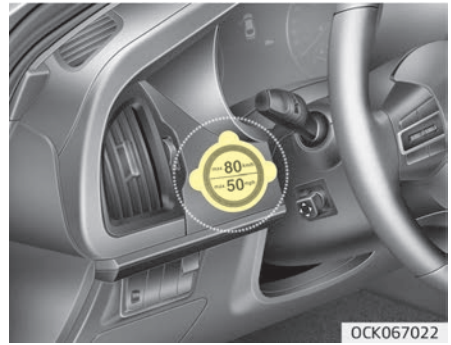

⚠ CAUTION

Before using the tire repair kit, please read carefully the instruction attached on the sealant case. Detach the speed limit label on the sealant case and put it on a highly visible place. Always drive within the speed limit.



3. Shake the sealant bottle.

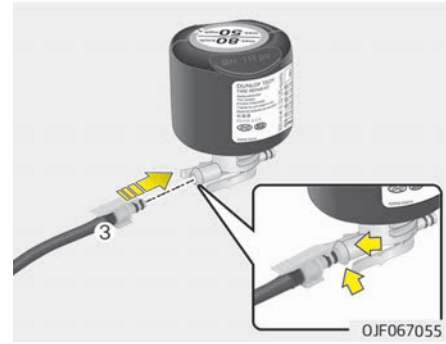

4. Connect the filling hose (3) onto the connector of the sealant bottle.

5. Ensure that button (7) on the compressor is not pressed.

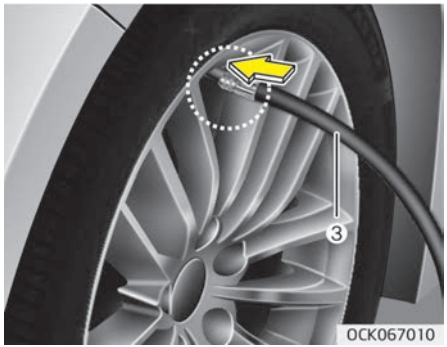

6. Unscrew the valve cap from the valve of the defective wheel and screw filling hose (3) of the sealant bottle onto the valve.

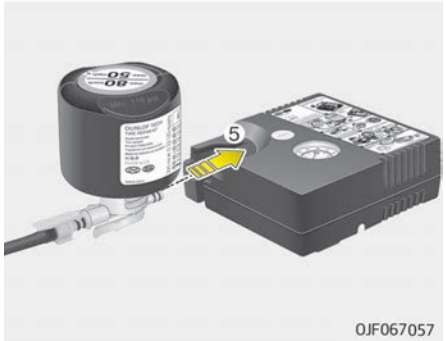

7. Insert the sealant bottle into the housing (5) of the compressor so that the bottle is upright.
8. Ensure that the compressor is switched off.

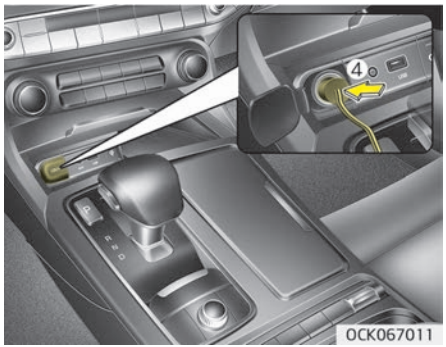

9. Connect between compressor and the vehicle power outlet using the cable and connectors (4).
10. With the engine start/stop button position on: switch on the compressor and let it run for approximately 5~7 minutes to fill the sealant up to proper pressure (refer to the "Tires and wheels" on page 8-09). The inflation pressure of the tire after filling is unimportant and will be checked/corrected later. Be careful not to overinflate the tire and stay away from the tire when filling it. When the tire and wheel are damaged, do not use Tire Mobility Kit for your safety.

⚠ CAUTION

■ Tire pressure

Do not attempt to drive your vehicle if the tire pressure is below 200 kPa (29 psi, 2 bar).
This could result in an accident due to sudden tire failure.

11. Switch off the compressor.

12. Detach the hose from the sealant bottle connector and from the tire valve.

Return the Tire Mobility Kit to its storage location in the vehicle.

⚠ WARNING

Carbon monoxide poisoning and suffocation is possible if the engine is left running in a poorly ventilated or unventilated location (such as inside a building).

Distributing the sealant

13. Immediately drive approximately 7~10 km (4~6 miles or, about 10 min) to evenly distribute the sealant in the tire.

⚠ CAUTION

Do not exceed a speed of 80 km/h (50 mph). If possible, do not fall below a speed of 20 km/h (12 mph).

(Continued)

(Continued)

While driving, if you experience any unusual vibration, ride disturbance or noise, reduce your speed and drive with caution until you can safely pull off of the side of the road. Call for road side service or towing.

When you use the Tire Mobility Kit, the wheel may be stained by sealant. Therefore, remove the tire pressure sensors and have the vehicle inspected at a professional workshop. Kia recommends to visit an authorized Kia dealer/service partner.

Checking the tire inflation pressure

1. After driving approximately 7~10 km (4~6 miles or about 10 minutes), stop at a suitable location.
2. Connect the filling hose (3) of the compressor (clip mounted side) directly and then connect the filling hose (3) (opposite side) to the tire valve.
3. Connect between compressor and the vehicle power outlet using the cable and connectors.
4. Adjust the tire inflation pressure to 200 kPa (29 psi). With the Engine Start/Stop button ON position, proceed as follows.
   - To increase the inflation pressure: Switch on the compressor, position I. To check the current inflation pressure setting, briefly switch off the compressor.

⚠ WARNING

Do not let the compressor run for more than 10 minutes, otherwise the device will overheat and may be damaged.

   - To reduce the inflation pressure: Press the button (9) on the compressor.

⚠ CAUTION

If the inflation pressure is not maintained, drive the vehicle a second time, refer to "Distributing the sealant" on page 6-29. Then repeat steps 1 to 4.

(Continued)

(Continued)

Use of the TMK may be ineffectual for tire damage larger than approximately 4 mm (0.16 in).
Contact a professional workshop if the tire cannot be made roadworthy with the Tire Mobility Kit. Kia recommends to visit an authorized Kia dealer/service partner.

⚠ WARNING

The tire inflation pressure must be at least 200 kPa (29 psi, 2 bar). If it is not, do not continue driving.
Call for road side service or towing.

Technical data

System voltage: DC 12 V
Working voltage: DC 10 - 15 V
Amperage rating: max. 15 A ± 1A (at DC 12V operation)
Suitable for use at temperatures: -30 ~ +70 °C (-22 ~ +158 °F)
Max. working pressure: 6 bar (87 psi)
Size
Compressor: 161 x 150 x 55.8 mm (6.3 x 5.9 x 2.2 in.)
Sealant bottle: 104 x 85 ø mm (4.1 x 3.3 ø in.)
Compressor weight: 805 g ± 30g (1.77 lbs ± 0.07 lbs)
Sealant volume: 300 ml (18.3 cu. in.)

❋ Sealant and spare parts can be obtained and replaced at an authorized vehicle or tire dealer. Empty sealant bottles may be disposed of at home. Liquid residue from the sealant should be disposed of by your vehicle or tire dealer or in accordance with local waste disposal regulations.

TOWING

Towing service

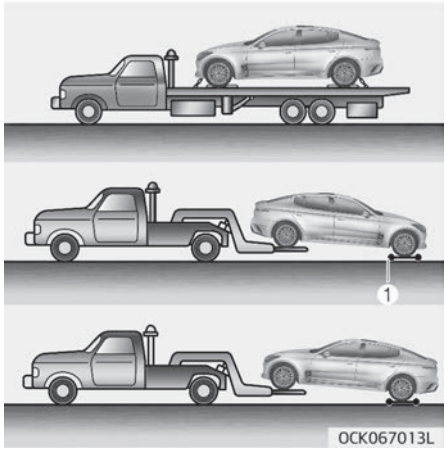

If emergency towing is necessary, we recommend having it done by an authorized Kia dealer or a commercial tow-truck service. Proper lifting and towing procedures are necessary to prevent damage to the vehicle. The use of wheel dollies (1) or flatbed is recommended.

On AWD vehicles, your vehicle must be towed with a wheel lift and dollies or flatbed equipment with all the wheels off the ground.

⚠ CAUTION

The AWD vehicle should never be towed with the wheels on the ground. This can cause serious damage to the transaxle or the AWD system.

If any of the loaded wheels or suspension components are damaged or the vehicle is being towed with the front wheels on the ground, use a towing dolly under the front wheels.
When being towed by a commercial tow truck and wheel dollies are not used, the rear of the vehicle should always be lifted, not the front.

✻ NOTICE

If the EPB does not release normally, contact a professional workshop. Kia

(Continued)

(Continued)

recommends to visit an authorized Kia dealer/service partner.

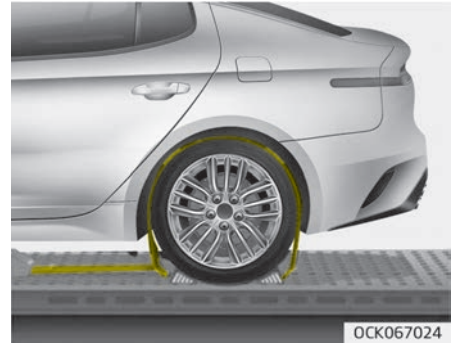

- Ensure any metal parts on the tie-down straps do not contact painted surfaces or the face of the wheels.
- Do not place straps over the body panels or through the wheels.

⚠ CAUTION

Attaching straps to the chasis, suspension or other parts of the body can cause damage.

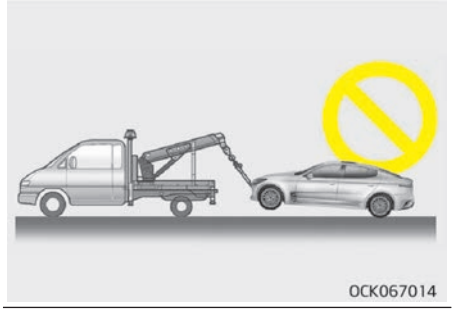
OCK067014

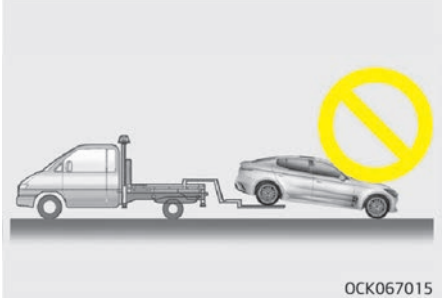
OCK067015

⚠ CAUTION

- **Do not tow the vehicle backwards with the rear wheels on the ground as this may cause damage to the vehicle.**
- **Do not tow with sling-type equipment. Use wheel lift or flatbed equipment.**

When towing your vehicle in an emergency without wheel dollies :

1. Set the Engine Start/Stop button in the ACC position.
2. Place the transaxle shift lever in N (Neutral).
3. Release the parking brake.

⚠ CAUTION

Failure to place the transaxle shift lever in N (Neutral) may cause internal damage to the transaxle.

Removable towing hook

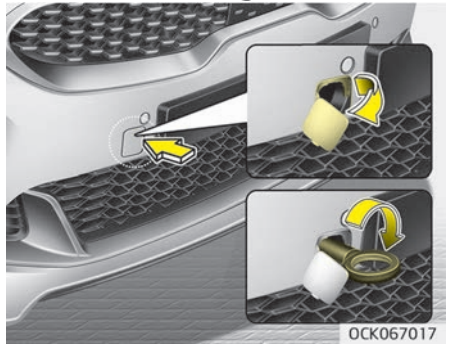
OCK067017

1. Open the trunk, and remove the towing hook from the tool case.
2. Remove the hole cover pressing the right side of the cover on the bumper.
3. Install the towing hook by turning it clockwise into the hole until it is fully secured.
4. Remove the towing hook and install the cover after use.

Emergency Towing

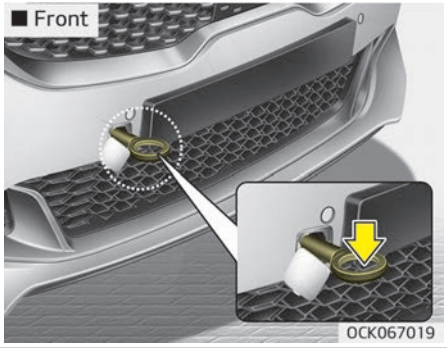

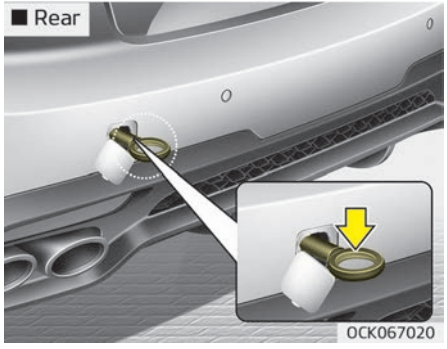

If towing is necessary, we recommend you to have it done by an authorized Kia dealer or a commercial tow truck service.

If towing service is not available in an emergency, your vehicle may be temporarily towed using a cable or chain secured to the emergency towing hook under the front (or rear) of the vehicle. Use extreme caution when towing the vehicle. A driver must be in the vehicle to steer it and operate the brakes.

Towing in this manner may be done only on hard-surfaced roads for a short distance and at low speed. Also, the wheels, axles, power train, steering and brakes must all be in good condition.

- Do not use the tow hooks to pull a vehicle out of mud, sand or other conditions from which the vehicle cannot be driven out under its own power.
- Avoid towing a vehicle heavier than the vehicle doing the towing.
- The drivers of both vehicles should communicate with each other frequently.
- Before emergency towing, check if the hook is not broken or damaged.
- Fasten the towing cable or chain securely to the hook.
- Do not jerk the hook. Apply it steadily and with even force.
- To avoid damaging the hook, do not pull from the side or at a vertical angle. Always pull straight ahead.

⚠ CAUTION

- **Attach a towing strap to the tow hook.**
- **Using a portion of the vehicle other than the tow hooks for towing may damage the body of your vehicle.**
- **Use only a cable or chain specifically intended for use in towing vehicles. Securely fasten the cable or chain to the towing hook provided.**

⚠ WARNING

Use extreme caution when towing the vehicle.
(Continued)

(Continued)

- **Avoid sudden starts or erratic driving maneuvers which would place excessive stress on the emergency towing hook and towing cable or chain. The hook and towing cable or chain may break and cause serious injury or damage.**
- **If the disabled vehicle is unable to be moved, do not forcibly continue the towing. We recommend that you contact an authorized Kia dealer or a commercial tow truck service for assistance.**
- **Tow the vehicle as straight ahead as possible.**
- **Keep away from the vehicle during towing.**

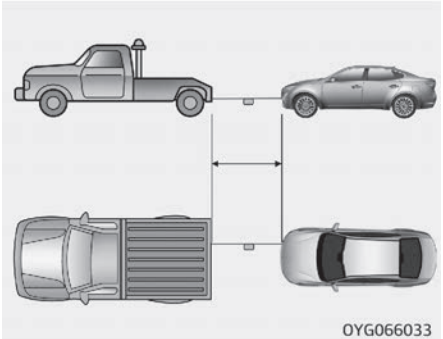

- Use a towing strap less than 5 m (16 feet) long. Attach a white or red cloth (about 30 cm (12 inches) wide) in the middle of the strap for easy visibility.
- Drive carefully so that the towing strap is not loosened during towing.

Emergency Towing precautions

- Place the Engine start/stop button to ACC position so the steering wheel isn't locked.
- Place the transaxle shift lever in N (Neutral).
- Release the parking bake.
- Press the brake pedal with more force than normal since you will have reduced brake performance.
- More steering effort will be required because the power steering system will be disabled.
- If you are driving down a long hill, the brakes may overheat and brake performance will be reduced. Stop often and let the brakes cool off.

⚠ CAUTION

■ Automatic transaxle

- **If the car is being towed with all four wheels on the ground, it can be towed only from the front. Be sure that the transaxle is in neutral. Be sure the steering is unlocked by placing the Engine start/stop button is in the ACC position. A driver must be in the towed vehicle to operate the steering and brakes.**

(Continued)

(Continued)

- **To avoid serious damage to the automatic transaxle, limit the vehicle speed to 15 km/h (10 mph) and drive less than 1.5 km (1 mile) when towing.**
- **Before towing, check the automatic transaxle for fluid leaks under your vehicle. If the automatic transaxle fluid is leaking, flatbed equipment or a towing dolly must be used.**

EMERGENCY COMMODITY (IF EQUIPPED)

There are some emergency commodities in the vehicle to help you respond to the emergency situation.

Fire extinguisher

If there is small fire and you know how to use the fire extinguisher, take the following steps carefully.

1. Pull the pin at the top of the extinguisher that keeps the handle from being accidentally pressed.
2. Aim the nozzle toward the base of the fire.
3. Stand approximately 2.5 m (8 ft) away from the fire and squeeze the handle to discharge the extinguisher. If you release the handle, the discharge will stop.
4. Sweep the nozzle back and forth at the base of the fire. After the fire appears to be out, watch it carefully since it may re-ignite.

First aid kit

There are some items such as scissors, bandage and adhesive tape and etc. in the kit to give first aid to an injured person.

Triangle reflector

Place the triangle reflector on the road to warn oncoming vehicles during emergencies, such as when the vehicle is parked by the roadside due to any problems.

Tire pressure gauge (if equipped)

Tires normally lose some air in day- today use, and you may have to add a few pounds of air periodically and it is not usually a sign of a leaking tire, but of normal wear. Always check tire pressure when the tires are cold because tire pressure increases with temperature.

To check the tire pressure, take the following steps:

1. Unscrew the inflation valve cap that is located on the rim of the tire.
2. Press and hold the gauge against the tire valve. Some air will escape as you begin and more will escape if you don't press the gauge in firmly.
3. A firm non-leaking push will activate the gauge.
4. Read the tire pressure on the gauge to know whether the tire pressure is low or high.
5. Adjust the tire pressures to the specified pressure. Refer to “Tires and wheels” on page 8-09.
6. Reinstall the inflation valve cap.

Maintenance

Engine compartment....7-04
Maintenance services....7-06
Owner's responsibility....7-06
Owner maintenance precautions....7-06
Owner maintenance....7-09
Owner maintenance schedule....7-09
Scheduled maintenance service....7-11
Scheduled maintenance service precaution....7-11
Normal maintenance schedule - for Europe (except Russia)....7-12
Normal Maintenance Schedule - For Europe (Except Russia) (Continued)....7-14
Maintenance under severe usage conditions - for Europe (except Russia)....7-18
Normal maintenance schedule - except Europe (including Russia)....7-21
Normal Maintenance Schedule - Except Europe (Including Russia) (Continued)....7-23
Maintenance under severe usage conditions - except Europe (including Russia)....7-29
Explanation of scheduled maintenance items....7-32
Engine oil and filter....7-32
Drive belts....7-32
Fuel filter cartridge (for diesel)....7-32
Fuel filter (for gasoline)....7-32
Fuel lines fuel hoses and connections....7-32
Vapor hose (for gasoline engine) and fuel filler cap....7-33
Vacuum crankcase ventilation hoses....7-33
Air cleaner filter....7-33
Spark plugs (for gasoline engine)....7-33
Valve clearance (for gasoline engine)....7-33
Cooling system....7-33
Coolant....7-33
Automatic transaxle fluid....7-33
Brake hoses and lines....7-34
Brake fluid....7-34
Parking brake....7-34
Brake discs pads calipers and rotors....7-34
Suspension mounting bolts....7-34
Steering gear box, linkage & boots/lower arm ball joint....7-34
Drive shafts and boots....7-34
Air conditioning refrigerant....7-34
Engine oil (Gasoline)....7-35
Checking the engine oil level....7-35
Changing the engine oil and filter....7-36
Engine oil (Diesel)....7-37
Checking the engine oil level....7-37
Changing the engine oil and filter....7-38
Engine coolant....7-39
Checking the coolant level....7-39
Changing the coolant....7-41
Brake fluid....7-42
Checking the brake fluid level....7-42
Washer fluid....7-43
Checking the washer fluid level....7-43
Parking brake....7-44
Checking the parking brake....7-44
Fuel filter (for diesel)....7-45
Draining water from the fuel filter....7-45

Fuel filter cartridge replacement 7-45
Air cleaner 7-46
Filter replacement 7-46
Climate control air filter 7-47
Filter inspection 7-47
Wiper blades 7-48
Blade inspection 7-48
Blade replacement 7-48
Battery 7-50
Battery replacement 7-50
For best battery service 7-50
Battery capacity label 7-52
Battery recharging 7-52
Reset items 7-53
Tires and wheels 7-54
Tire care 7-54
Recommended cold tire inflation pressures 7-54
Checking tire inflation pressure 7-55
Tire rotation 7-56
Wheel alignment and tire balance 7-57
Tire replacement 7-57
Wheel replacement 7-59
Tire traction 7-59
Tire maintenance 7-59
Tire sidewall labeling 7-59
Low aspect ratio tire 7-62
Fuses 7-64
Inner panel fuse replacement 7-66
Engine compartment fuse replacement 7-67
Fuse-relay panel description 7-69
Light bulbs 7-88
Bulb replacement precaution 7-88
Light bulb position (Front) 7-90
Light bulb position (Rear) 7-90
Light bulb position (Side) 7-91
Headlamp (LED type) replacement (Headlamp Type B) 7-91
Position lamp + DRL (LED type) bulb replacement (Headlamp Type A) 7-91
Headlamp (Low/High beam) bulb replacement (Headlamp Type A) 7-92
Front turn signal lamp bulb replacement (Headlamp Type A) 7-93
Stop and tail lamp (LED type) bulb replacement 7-94
Rear fog lamp (LED type) bulb replacement 7-95
Rear turn signal lamp (LED type) bulb replacement 7-95
Rear turn signal lamp (bulb type) bulb replacement 7-95
Back-up lamp bulb replacement 7-97
High mounted stop lamp (LED type) bulb replacement 7-98
License plate lamp (LED type) bulb replacement 7-98
Side repeater lamp (LED type) bulb replacement 7-98
Map lamp (LED type) bulb replacement 7-99
Vanity mirror lamp (LED type) bulb replacement 7-99
Room lamp (LED type) bulb replacement 7-99
Glove box lamp (LED type) bulb replacement 7-100
Luggage room lamp (LED type) bulb replacement 7-100
Headlamp aiming (for Europe) 7-100
Appearance care 7-108
Exterior care 7-108

Interior care..... 7-112
Emission control system 7-114
1. Crankcase emission control system..... 7-114
2. Evaporative emission control system.....7-114
3. Exhaust emission control system..... 7-114
Selective Catalytic Reduction 7-117

ENGINE COMPARTMENT

■ THETA II 2.0L T-GDI Engine (Gasoline)

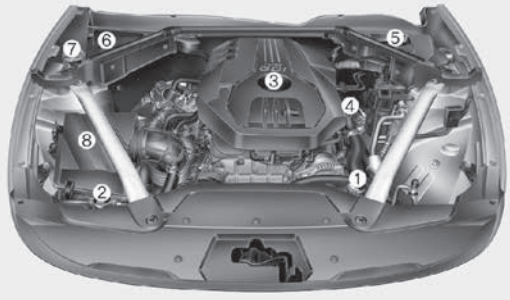

■ Lambda II PE 3.3L T-GDI Engine (Gasoline)

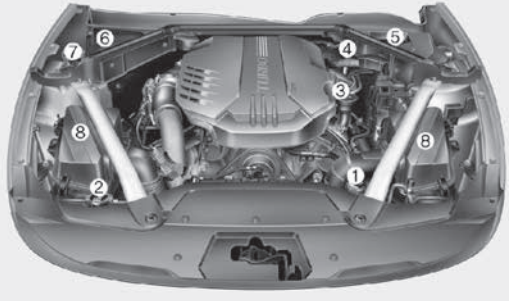

❋ The actual engine room in the vehicle may differ from the illustration.
❋ The battery is in the luggage room.

OCK077001/OCK077002B

1. Engine coolant reservoir
2. Radiator cap
3. Engine oil filler cap
4. Engine oil dipstick
5. Brake fluid reservoir
6. Fuse box
7. Windshield washer fluid reservoir
8. Air cleaner

■ R 2.2L Engine (Diesel)

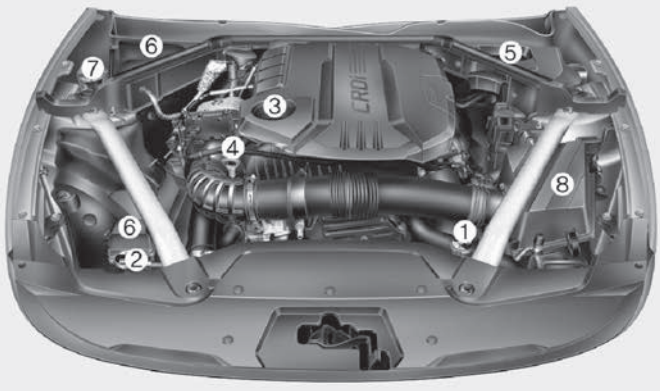

❊ The actual engine room in the vehicle may differ from the illustration.
❊ The battery is in the luggage room.

OCK078003

1. Engine coolant reservoir
2. Radiator cap
3. Engine oil filler cap
4. Engine oil dipstick
5. Brake fluid reservoir
6. Fuse box
7. Windshield washer fluid reservoir
8. Air cleaner

MAINTENANCE SERVICES

You should exercise the utmost care to prevent damage to your vehicle and injury to yourself whenever performing any maintenance or inspection procedures.
Inadequate, incomplete or insufficient servicing may result in operational problems with your vehicle that could lead to vehicle damage, an accident, or personal injury.

Owner's responsibility

✻ NOTICE

Maintenance Service and Record Retention are the owner's responsibility.

Have your vehicle serviced by a professional workshop. Kia recommends to visit an authorized Kia dealer/service partner.
You should retain documents that show proper maintenance has been performed on your vehicle in accordance with the scheduled maintenance service charts shown on the following pages.
You need this information to establish your compliance with the servicing and maintenance requirements of your vehicle warranties.
Detailed warranty information is provided in your Warranty & Maintenance book.
Repairs and adjustments required as a result of improper maintenance or a lack of required maintenance are not covered when your vehicle is covered by warranty.

Owner maintenance precautions

Improper or incomplete service may result in problems. This section gives instructions only for the maintenance items that are easy to perform.

✻ NOTICE

Improper owner maintenance during the warranty period may affect warranty coverage. For details, read the separate Warranty & Maintenance book provided with the vehicle. If you're unsure about any servicing or maintenance procedure, have the system serviced by a pro-

(Continued)

(Continued)

fessional workshop. Kia recommends to visit an authorized Kia dealer/service partner.

⚠ WARNING

■ Maintenance work

- **Performing maintenance work on a vehicle can be dangerous. You can be seriously injured while performing some maintenance procedures. If you lack sufficient knowledge and experience or the proper tools and equipment to do the work, have the system serviced by a professional workshop. Kia recommends to visit an authorized Kia dealer/service partner.**

(Continued)

(Continued)

- Working under the hood with the engine running is dangerous. It becomes even more dangerous when you wear jewelry or loose clothing. These can become entangled in moving parts and result in injury. Therefore, if you must run the engine while working under the hood, make certain that you remove all jewelry (especially rings, bracelets, watches, and necklaces) and all necktie, scarves, and similar loose clothing before getting near the engine or cooling fans.

⚠ WARNING

■ Touching metal parts

(Continued)

(Continued)



Do not touch metal parts (including strut bars) while the engine is operating or hot. Doing so could result in serious personal injury. Turn the engine off and wait until the metal parts cool down to perform maintenance work on the vehicle.

⚠ CAUTION

- Do not put heavy objects or apply excessive force on top of the engine cover (if equipped) or fuel related parts.
- When you inspect the fuel system (fuel lines and fuel injection devices), contact a professional workshop. Kia recommends to visit an authorized Kia dealer/service partner.
- Do not drive long time with the engine cover (if equipped) removed.
- When checking the engine room, do not go near fire.
  Fuel, washer fluid, etc. are flammable oils that may cause fire.
- Before touching the battery, ignition cables and electrical wiring, you should disconnect the battery "–" terminal. You may get an electric shock from the electric current.
- When you remove the interior trim cover with a flat bed (–) driver, be careful not to damage the cover.

(Continued)

(Continued)

- **Be careful when you replace and clean bulbs to avoid burns or electrical shock.**

OWNER MAINTENANCE

The following lists are vehicle checks and inspections that should be performed at the frequencies indicated to help ensure safe, dependable operation of your vehicle.
Any adverse conditions should be brought to the attention of your dealer as soon as possible.
These Owner Maintenance Checks are generally not covered by warranties and you may be charged for labor, parts and lubricants used.

Owner maintenance schedule

When you stop for fuel:

- Check the engine oil level.
- Check the coolant level in the coolant reservoir.
- Check the windshield washer fluid level.
- Look for low or under-inflated tires.

⚠ WARNING

Be careful when checking your engine coolant level when the engine is hot. Scalding hot coolant and steam may blow out under pressure. This could cause burns or other serious injury.

While operating your vehicle:

- Note any changes in the sound of the exhaust or any smell of exhaust fumes in the vehicle.
- Check for vibrations in the steering wheel. Notice any increased steering effort or looseness in the steering wheel, or change in its straight ahead position.
- Notice if your vehicle constantly turns slightly or "pulls" to one side when traveling on smooth, level road.
- When stopping, listen and check for unusual sounds, pulling to one side, increased brake pedal travel or "hard-to-push" brake pedal.
- If any slipping or changes in the operation of your transaxle occurs, check the transaxle fluid level.
- Check manual transaxle operation, including clutch operation.
- Check automatic transaxle P (Park) function.
- Check the parking brake.
- Check for fluid leaks under your vehicle (water dripping from the air conditioning system during or after use is normal).

At least monthly:

- Check the coolant level in the engine coolant reservoir.
- Check the operation of all exterior lights, including the stop lights, turn signals and hazard warning flashers.
- Check the inflation pressures of all tires including the spare for tires that are worn, show uneven wear, or are damaged.
- Check for loose wheel lug nuts.

At least twice a year (i.e. every spring and fall):

- Check the radiator, heater and air conditioning hoses for leaks or damage.
- Check the windshield washer spray and wiper operation. Clean the wiper blades with clean cloth dampened with washer fluid.
- Check the headlight alignment.
- Check the muffler, exhaust pipes, shields and clamps.
- Check the lap/shoulder belts for wear and function.

At least once a year:

- Clean body and door drain holes.
- Lubricate door hinges and checks, and hood hinges.
- Lubricate door and hood locks and latches.
- Lubricate door rubber weatherstrips.
- Check the air conditioning system.
- Inspect and lubricate automatic transaxle linkage and controls.
- Clean battery and terminals.
- Check the brake fluid level.

SCHEDULED MAINTENANCE SERVICE

Scheduled maintenance service precaution

Follow the Normal Maintenance Schedule if the vehicle is usually operated where none of the following conditions apply. If any of the following conditions apply, follow the Maintenance Under Severe Usage Conditions.

- Repeated driving short distance of less than 8 km (5 miles) in normal temperature or less than 16 km (10 miles) in freezing temperature
- Extensive engine idling or low speed driving for long distances
- Driving on rough, dusty, muddy, unpaved, graveled or salt-spread roads
- Driving in areas using salt or other corrosive materials or in very cold weather
- Driving in heavy dust condition
- Driving in heavy traffic area
- Driving on uphill, downhill, or mountain road repeatedly
- Towing a trailer or using a camper, or roof rack
- Driving as a patrol car, taxi, other commercial use of vehicle towing
- Driving over 170 km/h (106 mph)
- Frequently driving in stop-and-go condition

If your vehicle is operated under the above conditions, you should inspect, replace or refill more frequently than the following Normal Maintenance Schedule. After the periods or distance shown in the chart, continue to follow the prescribed maintenance intervals.

Normal maintenance schedule - for Europe (except Russia)

The following maintenance services must be performed to ensure good emission control and performance. Keep receipts for all vehicle emission services to protect your warranty. Where both mileage and time are shown, the frequency of service is determined by whichever occurs first.

NO.	ITEM	REMARK
*1	Engine oil and engine oil filter	Check the engine oil level and leak every 500 km (350 miles) or before starting a long trip.
*2	Engine oil and engine oil filter (For Diesel Engine, Europe)	• If the recommended oil is not available, replace engine oil and engine oil filter every 20,000 km (13,000 miles) or 12 months. • The engine oil level should be checked regularly and maintained properly. Operating with an insufficient amount oil can damage the engine, and such damage is not covered by warranty. • This maintenance schedule depends on fuel quality. It is applicable only when using a qualified fuel <"EN590 or equivalent">. If the diesel fuel specifications don't meet the EN590, it must be replaced according to the severe maintenance schedule.
*3	Coolant (Engine)	When adding coolant, use only deionized water or soft water for your vehicle and never mix hard water in the coolant filled at the factory. An improper coolant mixture can result in serious malfunction or engine damage.
*4	Drive belts (Engine)	• Adjust alternator, water pump and air conditioner drive belt. Inspect and if necessary repair or replace. • Inspect drive belt tensioner, idler and alternator pulley and if necessary correct or replace.
*5	Valve clearance	Inspect for excessive valve noise and / or engine vibration and adjust if necessary. In this case, have the system checked by a professional workshop. Kia recommends to visit an authorized Kia dealer / service partner.

NO.	ITEM	REMARK
*6	Spark plug	For your convenience, it can be replaced prior to it's interval when you do maintenance of other items.
*7	Differential oil (rear, front)	Differential oil should be changed anytime it has been submerged in water.
*8	Differential oil (rear) - With LSD	When replacing differential oil with LSD, use only specified LSD oil.
*9	Fuel additives (Gasoline)	Kia recommends that you use unleaded gasoline which has an octane rating of RON (Research Octane Number) 95 / AKI (Anti Knock Index) 91 or higher (for Europe) or Octane Rating of RON (Research Octane Number) 91 / AKI (Anti-Knock Index) 87 or higher (except Europe). For customers who do not use good quality gasolines including fuel additives regularly, and have problems starting or the engine does not run smoothly, one bottle of additives added to the fuel tank at every 10,000 km (6,500 miles) (except China, Brazil) / 5,000 km (3,000 miles) (for China, Brazil). Additives are available from a professional workshop along with information on how to use them. Kia recommends to visit an authorized Kia dealer/service partner. Do not mix other additives.
*10	Fuel filter cartridge (Diesel)	This maintenance schedule depends on fuel quality. It is applicable only when using a qualified fuel <"EN590 or equivalent">. If the diesel fuel specifications don't meet the EN590, it must be replaced more frequently. If there are some important safety matters like fuel flow restriction, surging, loss of power, hard starting problem etc., replace the fuel filter immediately regardless of maintenance schedule and consult a professional workshop for more details. Kia recommends to consult an authorized Kia dealer/service partner.

Normal Maintenance Schedule - For Europe (Except Russia) (Continued)

MAINTENANCE INTERVALS	Normal Maintenance Schedule - For Europe (Except Russia)									
	Number of months or driving distance, whichever comes first									
	Months		24	48	72	96	120	144	168	192
	Miles×1,000		20	40	60	80	100	120	140	160
	Km×1,000		30	60	90	120	150	180	210	240
MAINTENANCE ITEM										
Engine oil and engine oil filter *1, *2	Gasoline	Theta II 2.0L T-GDI	Replace every 10,000 km (6,500 miles) or 12 months							
	Gasoline	Lambda II PE 3.3L T-GDI	Replace every 10,000 km (6,500 miles) or 12 months							
	Diesel	R 2.2L 2WD	Replace every 20,000 km (13,000 miles) or 12 months							
	Diesel	R 2.2L 4WD	R	R	R	R	R	R	R	R
Coolant (Engine) *3	Gasoline, Diesel		At first, Replace 210,000 km (140,000 miles) or 120 months after that, Replace every 30,000 km (20,000 miles) or 24 months							
Drive belts (Engine) *4	Gasoline		-	-	I	I	I	I	I	I
	Diesel		-	I	I	I	I	I	I	I
Valve clearance *5	Gasoline	Theta II 2.0L T-GDI	-	-	I	-	-	I	-	-
	Gasoline	Lambda II PE 3.3L T-GDI	-	-	I	-	-	I	-	-

MAINTENANCE INTERVALS	Normal Maintenance Schedule - For Europe (Except Russia)									
	Number of months or driving distance, whichever comes first									
	Months		24	48	72	96	120	144	168	192
	Miles×1,000		20	40	60	80	100	120	140	160
	Km×1,000		30	60	90	120	150	180	210	240
MAINTENANCE ITEM										
Vacuum hoses and crankcase ventilation hoses	Gasoline		I	I	I	I	I	I	I	I
Spark plugs *6	Gasoline	Theta II 2.0L T-GDI	Replace every 70,000 km (45,500 miles)							
	Gasoline	Lambda II PE 3.3L T-GDI	Replace every 70,000 km (45,500 miles)							
Automatic transaxle fluid	Gasoline, Diesel		No check, No service required							
Drive shaft and boots	Gasoline, Diesel		I	I	I	I	I	I	I	I
Propeller shaft	Gasoline, Diesel		I	I	I	I	I	I	I	I
Differential oil (rear) *7, *8	Gasoline, Diesel	Without LSD	-	I	-	I	-	I	-	I
		With LSD	-	R	-	R	-	R	-	R
Differential oil (front) (AWD) *7	Gasoline, Diesel		-	I	-	I	-	I	-	I
Transfer case oil (AWD)	Gasoline, Diesel		No check, No service required							
Fuel additives (Gasoline) *9	Gasoline		Add every 10,000 km (6,500 miles) or 12 months							
Fuel lines, hoses and connections	Gasoline		-	I	-	I	-	I	-	I
	Diesel		I	I	I	I	I	I	I	I
Fuel tank air filter (Gasoline)	Gasoline		-	I	-	I	-	I	-	I

MAINTENANCE INTERVALS	Normal Maintenance Schedule - For Europe (Except Russia)									
	Number of months or driving distance, whichever comes first									
	Months		24	48	72	96	120	144	168	192
	Miles×1,000		20	40	60	80	100	120	140	160
	Km×1,000		30	60	90	120	150	180	210	240
MAINTENANCE ITEM										
Vapor hose and fuel filler cap (Gasoline)	Gasoline		-	I	-	I	-	I	-	I
Fuel filler cap (Diesel)	Diesel		-	I	-	I	-	I	-	I
Urea solution line & connections (if equipped)	Diesel		I	I	I	I	I	I	I	I
Urea solution filler cap (if equipped)	Diesel		-	I	-	I	-	I	-	I
Fuel filter cartridge (Diesel) *10	Diesel		I	R	I	R	I	R	I	R
Air cleaner filter	Gasoline, Diesel		I	R	I	R	I	R	I	R
Intercooler, in/out hose, air intake hose	Gasoline	Theta II 2.0L T-GDI	Inspect every 10,000 km (6,500 miles) or 12 months							
	Gasoline	Lambda II PE 3.3L T-GDI	Inspect every 10,000 km (6,500 miles) or 12 months							
Exhaust system	Gasoline, Diesel		I	I	I	I	I	I	I	I
Cooling system	Gasoline, Diesel		-	I	I	I	I	I	I	I
Air conditioner compressor / refrigerant	Gasoline, Diesel		I	I	I	I	I	I	I	I

MAINTENANCE INTERVALS	Normal Maintenance Schedule - For Europe (Except Russia)								
	Number of months or driving distance, whichever comes first								
	Months	24	48	72	96	120	144	168	192
	Miles×1,000	20	40	60	80	100	120	140	160
	Km×1,000	30	60	90	120	150	180	210	240
MAINTENANCE ITEM									
Climate control air filter	Gasoline, Diesel	R	R	R	R	R	R	R	R
Brake discs and pads	Gasoline, Diesel	I	I	I	I	I	I	I	I
Brake lines, hoses and connections	Gasoline, Diesel	I	I	I	I	I	I	I	I
Brake fluid	Gasoline, Diesel	R	R	R	R	R	R	R	R
Parking brake (Foot Type)	Gasoline, Diesel	I	I	I	I	I	I	I	I
Steering gear rack, linkage and boots	Gasoline, Diesel	I	I	I	I	I	I	I	I
Suspension ball joints	Gasoline, Diesel	I	I	I	I	I	I	I	I
Tire (pressure & tread wear)	Gasoline, Diesel	I	I	I	I	I	I	I	I
Battery (12V) condition	Gasoline, Diesel	I	I	I	I	I	I	I	I

I: Inspect and if necessary, adjust, correct, clean or replace.
R: Replace or change.

Maintenance under severe usage conditions - for Europe (except Russia)

MAINTENANCE ITEM			MAINTENANCE OPERATION	MAINTENANCE INTERVALS	DRIVING CONDITION
Engine oil and engine oil filter	Gasoline	Theta II 2.0L T-GDI	R	Every 5,000 km (3,000 miles) or 6 months	A, B, C, D, E, F, G, H, I, J, K
	Gasoline	Lambda II PE 3.3L T-GDI	R	Every 5,000 km (3,000 miles) or 6 months	
	Diesel	R 2.2L 2WD	R	Every 10,000 km (6,500 miles) or 6 months	
	Diesel	R 2.2L 4WD	R	Every 15,000 km (10,000 miles) or 12 months	
Spark plugs	Gasoline		R	Replace more frequently depending on the condition	A, B, F, G, H, I, K
Automatic transaxle fluid	Gasoline, Diesel		R	Every 90,000 km (60,000 miles)	A, C, D, E, F, G, H, I, J
Drive shaft and boots	Gasoline, Diesel		I	Inspect more frequently depending on the condition	C, D, E, F, G, H, I, J
Propeller shaft	Gasoline, Diesel		I	Every 15,000 km (10,000 miles) or 12 months	C, E
Differential oil (rear)	Gasoline, Diesel	Without LSD	R	Every 120,000 km (80,000 miles)	C, E, G, H, I, J
		With LSD	R	Every 60,000 km (40,000 miles)	C, E, G, H, I, J

MAINTENANCE ITEM		MAINTENANCE OPERATION	MAINTENANCE INTERVALS	DRIVING CONDITION
Differential oil (front) (AWD)	Gasoline, Diesel	R	Every 120,000 km (80,000 miles)	C, E, G, H, I, J
Air cleaner filter	Gasoline, Diesel	R	Replace more frequently depending on the condition	C, E
Climate control air filter	Gasoline, Diesel	R	Replace more frequently depending on the condition	C, E, G
Brake discs and pads, calipers and rotors	Gasoline, Diesel	I	Inspect more frequently depending on the condition	C, D, E, G, H
Parking brake (Foot Type)	Gasoline, Diesel	I	Inspect more frequently depending on the condition	C, D, G, H
Steering gear rack, linkage and boots	Gasoline, Diesel	I	Inspect more frequently depending on the condition	C, D, E, F, G
Suspension ball joints	Gasoline, Diesel	I	Inspect more frequently depending on the condition	C, D, E, F, G

Maintenance operation

I : Inspect and if necessary, adjust, correct, clean or replace.

R : Replace or change.

SEVERE DRIVING CONDITIONS

A: Repeatedly driving short distance of less than 8 km (5miles) in normal temperature or less than 16 km (10 miles) in freezing temperature.

B : Extensive engine idling or low speed driving for long distances.

C : Driving on rough, dusty, muddy, unpaved, graveled or salt-spread roads.

D : Driving in areas using salt or other corrosive materials or in very cold weather

E : Driving in heavy dust condition.

F : Driving in heavy traffic area.

G : Driving on uphill, downhill, or mountain roads repeatedly.
H : Towing a trailer or using a camper on roof rack.
I : Driving for patrol car, taxi, other commercial use of vehicle towing.
J : Driving over 170 km/h (106 mile/h).
K : Frequently driving in stop-and-go conditions.

Normal maintenance schedule - except Europe (including Russia)

The following maintenance services must be performed to ensure good emission control and performance. Keep receipts for all vehicle emission services to protect your warranty. Where both mileage and time are shown, the frequency of service is determined by whichever occurs first.

NO.	ITEM	REMARK
*1	Engine oil and engine oil filter	Check the engine oil level and leak every 500 km (350 miles) or before starting a long trip.
*2	Engine oil and engine oil filter (For Diesel Engine, Europe)	• If the recommended oil is not available, replace engine oil and engine oil filter every 20,000 km (13,000 miles) or 12 months. • The engine oil level should be checked regularly and maintained properly. Operating with an insufficient amount oil can damage the engine, and such damage is not covered by warranty. • This maintenance schedule depends on fuel quality. It is applicable only when using a qualified fuel <"EN590 or equivalent">. If the diesel fuel specifications don't meet the EN590, it must be replaced according to the severe maintenance schedule.
*3	Coolant (Engine)	When adding coolant, use only deionized water or soft water for your vehicle and never mix hard water in the coolant filled at the factory. An improper coolant mixture can result in serious malfunction or engine damage.
*4	Drive belts (Engine)	• Adjust alternator, water pump and air conditioner drive belt. Inspect and if necessary repair or replace. • Inspect drive belt tensioner, idler and alternator pulley and if necessary correct or replace.
*5	Valve clearance	Inspect for excessive valve noise and/or engine vibration and adjust if necessary. In this case, have the system checked by a professional workshop. Kia recommends to visit an authorized Kia dealer/service partner.

NO.	ITEM	REMARK
*6	Spark plug	For your convenience, it can be replaced prior to it's interval when you do maintenance of other items.
*7	Differential oil (rear, front)	Differential oil should be changed anytime it has been submerged in water.
*8	Differential oil (rear) - With LSD	When replacing differential oil with LSD, use only specified LSD oil.
*9	Fuel additives (Gasoline)	Kia recommends that you use unleaded gasoline which has an octane rating of RON (Research Octane Number) 95 / AKI (Anti Knock Index) 91 or higher (for Europe) or Octane Rating of RON (Research Octane Number) 91 / AKI (Anti-Knock Index) 87 or higher (except Europe). For customers who do not use good quality gasolines including fuel additives regularly, and have problems starting or the engine does not run smoothly, one bottle of additives added to the fuel tank at every 10,000 km (6,500 miles) (except China, Brazil) / 5,000 km (3,000 miles) (for China, Brazil). Additives are available from a professional workshop along with information on how to use them. Kia recommends to visit an authorized Kia dealer/service partner. Do not mix other additives.
*10	Fuel filter cartridge (Diesel)	This maintenance schedule depends on fuel quality. It is applicable only when using a qualified fuel <"EN590 or equivalent">. If the diesel fuel specifications don't meet the EN590, it must be replaced more frequently. If there are some important safety matters like fuel flow restriction, surging, loss of power, hard starting problem etc., replace the fuel filter immediately regardless of maintenance schedule and consult a professional workshop for more details. Kia recommends to consult an authorized Kia dealer/service partner.

Normal Maintenance Schedule - Except Europe (Including Russia) (Continued)

	NORMAL MAINTENANCE SCHEDULE - EXCEPT EUROPE (INCLUDING RUSSIA)									
	Number of months or driving distance, whichever comes first									
MAINTENANCE INTERVALS	Months			12	24	36	48	60	72	84	96
	Miles×1,000			10	20	30	40	50	60	70	80
	Km×1,000			15	30	45	60	75	90	105	120
MAINTENANCE ITEM											
Engine oil and engine oil filter [*1], [*2]	Gasoline	Theta II 2.0L T-GDI	Except China	Replace every 10,000 km (6,500 miles) or 12 months							
			For China	Replace every 5,000 km (3,000 miles) or 6 months							
	Gasoline	Lambda II PE 3.3L T-GDI	Except China	Replace every 10,000 km (6,500 miles) or 12 months							
			For China	Replace every 5,000 km (3,000 miles) or 6 months							
	Diesel	R 2.2L 2WD	For Russia, Australia, New Zealand and Republic of South Africa	Replace every 15,000 km (10,000 miles) or 12months							
			Except Russia, Australia, New Zealand and Republic of South Africa	Replace every 10,000 km (6,500 miles) or 12 months							

MAINTENANCE INTERVALS	NORMAL MAINTENANCE SCHEDULE - EXCEPT EUROPE (INCLUDING RUSSIA)										
	Number of months or driving distance, whichever comes first										
	Months			12	24	36	48	60	72	84	96
	Miles×1,000			10	20	30	40	50	60	70	80
	Km×1,000			15	30	45	60	75	90	105	120
MAINTENANCE ITEM											
Engine oil and engine oil filter *1, *2	Diesel	R 2.2L 4WD	For Russia, Australia, New Zealand and Republic of South Africa	Replace every 15,000 km (10,000 miles) or 12months							
			Except Russia, Australia, New Zealand and Republic of South Africa	Replace every 10,000 km (6,500 miles) or 12 months							
Coolant (Engine) *3	Gasoline, Diesel			At first, Replace 210,000 km (140,000 miles) or 120 months after that, Replace every 30,000 km (20,000 miles) or 24 months							
Drive belts (Engine) *4	Gasoline			-	I	-	I	-	I	-	I
	Diesel	For Russia, Australia, New Zealand and Republic of South Africa		-	-	-	I	-	I	-	I
		Except Russia, Australia, New Zealand and Republic of South Africa		-	-	-	I	-	I	-	I

MAINTENANCE INTERVALS	NORMAL MAINTENANCE SCHEDULE - EXCEPT EUROPE (INCLUDING RUSSIA)									
	Number of months or driving distance, whichever comes first									
	Months		12	24	36	48	60	72	84	96
	Miles×1,000		10	20	30	40	50	60	70	80
	Km×1,000		15	30	45	60	75	90	105	120
MAINTENANCE ITEM										
Valve clearance *5	Gasoline	Theta II 2.0L T-GDI	-	-	-	-	-	I	-	-
	Gasoline	Lambda II PE 3.3L T-GDI	-	-	-	-	-	I	-	-
Vacuum hoses and crank-case ventilation hoses	Gasoline		-	I	-	I	-	I	-	I
Spark plugs *6	Gasoline	Theta II 2.0L T-GDI	Replace every 70,000 km (45,500 miles)							
	Gasoline	Lambda II PE 3.3L T-GDI	Replace every 70,000 km (45,500 miles)							
Automatic transaxle fluid	Gasoline, Diesel		No check, No service required							
Drive shaft and boots	Gasoline, Diesel		-	I	-	I	-	I	-	I
Propeller shaft	Gasoline, Diesel		-	I	-	I	-	I	-	I
Differential oil (rear) *7, *8	Gasoline, Diesel	Without LSD	-	-	-	I	-	-	-	I
		With LSD	-	-	-	R	-	-	-	R
Differential oil (front) (AWD) *7	Gasoline, Diesel		-	-	-	I	-	-	-	I
Transfer case oil (AWD)	Gasoline, Diesel		No check, No service required							

MAINTENANCE INTERVALS	NORMAL MAINTENANCE SCHEDULE - EXCEPT EUROPE (INCLUDING RUSSIA)									
	Number of months or driving distance, whichever comes first									
	Months		12	24	36	48	60	72	84	96
	Miles×1,000		10	20	30	40	50	60	70	80
	Km×1,000		15	30	45	60	75	90	105	120
MAINTENANCE ITEM										
Fuel additives (Gasoline) *9	Gasoline	Except China, Brazil	Add every 10,000 km (6,500 miles) or 6 months							
		For China, Brazil	Add every 5,000 km (3,000 miles) or 6 months							
Fuel filter (Gasoline)	Gasoline	For China, Brazil	-	I	-	R	-	I	-	R
Fuel lines, hoses and connections	Gasoline		-	-	-	I	-	-	-	I
	Diesel		-	I	-	I	-	I	-	I
Fuel tank air filter (Gasoline)	Gasoline	Except China	-	I	-	R	-	I	-	R
		For China	I	I	R	I	I	R	I	I
Vapor hose and fuel filler cap (Gasoline)	Gasoline		-	-	-	I	-	-	-	I
Fuel filler cap (Diesel)	Diesel		-	-	-	I	-	-	-	I
Fuel filter cartridge (Diesel) *10	Diesel		-	I	-	R	-	I	-	R
Air cleaner filter	Gasoline, Diesel	Except China, India, Middle East	I	I	R	I	I	R	I	I
		For China, India, Middle East	R	R	R	R	R	R	R	R

MAINTENANCE INTERVALS	NORMAL MAINTENANCE SCHEDULE - EXCEPT EUROPE (INCLUDING RUSSIA)									
	Number of months or driving distance, whichever comes first									
	Months		12	24	36	48	60	72	84	96
	Miles×1,000		10	20	30	40	50	60	70	80
	Km×1,000		15	30	45	60	75	90	105	120
MAINTENANCE ITEM										
Intercooler, in/out hose, air intake hose	Gasoline	Theta II 2.0L T-GDI	Inspect every 10,000 km (6,500 miles) or 12 months							
	Gasoline	Lambda II PE 3.3L T-GDI	Inspect every 10,000 km (6,500 miles) or 12 months							
Exhaust system	Gasoline, Diesel		-	I	-	I	-	I	-	I
Cooling system	Gasoline, Diesel		-	-	-	I	-	I	-	I
Air conditioner compressor/ refrigerant	Gasoline, Diesel		I	I	I	I	I	I	I	I
Climate control air filter	Gasoline, Diesel	Except Australia and New Zealand	R	R	R	R	R	R	R	R
		For Australia and New Zealand	I	R	I	R	I	R	I	R
Brake discs and pads	Gasoline, Diesel		-	I	-	I	-	I	-	I
Brake lines, hoses and connections	Gasoline, Diesel		-	I	-	I	-	I	-	I
Brake fluid	Gasoline, Diesel		I	R	I	R	I	R	I	R
Parking brake (Foot Type)	Gasoline, Diesel		-	I	-	I	-	I	-	I
Steering gear rack, linkage and boots	Gasoline, Diesel		I	I	I	I	I	I	I	I

MAINTENANCE INTERVALS	NORMAL MAINTENANCE SCHEDULE - EXCEPT EUROPE (INCLUDING RUSSIA)									
	Number of months or driving distance, whichever comes first									
	Months		12	24	36	48	60	72	84	96
	Miles×1,000		10	20	30	40	50	60	70	80
	Km×1,000		15	30	45	60	75	90	105	120
MAINTENANCE ITEM										
Suspension ball joints	Gasoline, Diesel		I	I	I	I	I	I	I	I
Tire (pressure & tread wear)	Gasoline, Diesel		I	I	I	I	I	I	I	I
Battery (12V) condition	Gasoline, Diesel	Except Middle East	-	I	-	I	-	I	-	I
		For Middle East	Inspect every 10,000 km (6,500 miles) or 6 months							

Maintenance Operation

I: Inspect and if necessary, adjust, correct, clean or replace.

R: Replace or change.

Maintenance under severe usage conditions - except Europe (including Russia)

MAINTENANCE ITEM				MAINTENANCE OPERATION	MAINTENANCE INTERVALS	DRIVING CONDITION
Engine oil and engine oil filter	Gasoline	Theta II 2.0L T-GDI	Except China	R	Every 5,000 km (3,000 miles) or 6 months	A, B, C, D, E, F, G, H, I, J, K
			For China	R	Every 5,000 km (3,000 miles) or 3 months	
	Gasoline	Lambda II PE 3.3L T-GDI	Except China	R	Every 5,000 km (3,000 miles) or 6 months	
			For China	R	Every 5,000 km (3,000 miles) or 3 months	
	Diesel	R 2.2L 2WD	For Russia, Australia, New Zealand and Republic of South Africa	R	Every 7,500 km (5,000 miles) or 6 months	
			Except Russia, Australia, New Zealand and Republic of South Africa	R	Every 5,000 km (3,000 miles) or 6 months	
	Diesel	R 2.2L 4WD	For Russia, Australia, New Zealand and Republic of South Africa	R	Every 7,500 km (5,000 miles) or 6 months	

MAINTENANCE ITEM				MAINTENANCE OPERATION	MAINTENANCE INTERVALS	DRIVING CONDITION
Engine oil and engine oil filter	Diesel	R 2.2L 4WD	Except Russia, Australia, New Zealand and Republic of South Africa	R	Every 5,000 km (3,000 miles) or 6 months	A, B, C, D, E, F, G, H, I, J, K
Spark plugs	Gasoline			R	Replace more frequently depending on the condition	A, B, F, G, H, I, K
Automatic transaxle fluid	Gasoline, Diesel			R	Every 90,000 km (60,000 miles)	A, C, D, E, F, G, H, I, J
Drive shaft and boots	Gasoline, Diesel			I	Inspect more frequently depending on the condition	C, D, E, F, G, H, I, J
Propeller shaft	Gasoline, Diesel			I	Every 15,000 km (10,000 miles) or 12 months	C, E
Differential oil (rear)	Gasoline, Diesel	Without LSD		R	Every 120,000 km (80,000 miles)	C, E, G, H, I, J
		With LSD		R	Every 60,000 km (40,000 miles)	C, E, G, H, I, J
Differential oil (front) (AWD)	Gasoline, Diesel			R	Every 120,000 km (80,000 miles)	C, E, G, H, I, J
Air cleaner filter	Gasoline, Diesel			R	Replace more frequently depending on the condition	C, E
Climate control air filter	Gasoline, Diesel			R	Replace more frequently depending on the condition	C, E, G

MAINTENANCE ITEM		MAINTENANCE OPERATION	MAINTENANCE INTERVALS	DRIVING CONDITION
Brake discs and pads, calipers and rotors	Gasoline, Diesel	I	Inspect more frequently depending on the condition	C, D, E G, H
Parking brake (Foot Type)	Gasoline, Diesel	I	Inspect more frequently depending on the condition	C, D, G, H
Steering gear rack, linkage and boots	Gasoline, Diesel	I	Inspect more frequently depending on the condition	C, D, E, F, G
Suspension ball joints	Gasoline, Diesel	I	Inspect more frequently depending on the condition	C, D, E, F, G

Maintenance operation

I: Inspect and if necessary, adjust, correct, clean or replace.

R: Replace or change.

SEVERE DRIVING CONDITIONS

A : Repeatedly driving short distance of less than 8 km (5miles) in normal temperature or less than 16 km (10 miles) in freezing temperature.

B : Extensive engine idling or low speed driving for long distances.

C : Driving on rough, dusty, muddy, unpaved, graveled or salt-spread roads.

D : Driving in areas using salt or other corrosive materials or in very cold weather

E : Driving in heavy dust condition.

F : Driving in heavy traffic area.

G : Driving on uphill, downhill, or mountain roads repeatedly.

H : Towing a trailer or using a camper on roof rack.

I : Driving for patrol car, taxi, other commercial use of vehicle towing.

J : Driving over 170 km/h (106 mile/h).

K : Frequently driving in stop-and-go conditions.

EXPLANATION OF SCHEDULED MAINTENANCE ITEMS

Engine oil and filter

The engine oil and filter should be changed at the intervals specified in the maintenance schedule. If the vehicle is being driven in severe conditions, more frequent oil and filter changes are required.

Drive belts

Inspect all drive belts for evidence of cuts, cracks, excessive wear or oil saturation and replace if necessary. Drive belts should be checked periodically for proper tension and adjusted as necessary.

⚠ CAUTION

When you are inspecting the belt, place the ignition switch in the LOCK/OFF or ACC position.

Fuel filter cartridge (for diesel)

A clogged filter can limit the speed at which the vehicle may be driven, damage the emission system and cause multiple issues such as hard starting. If an excessive amount of foreign matter accumulates in the fuel tank, the filter may require replacement more frequently.
After installing a new filter, run the engine for several minutes, and check for leaks at the connections.
Have the fuel filter replaced by a professional workshop. Kia recommends to visit an authorized Kia dealer/service partner.

Fuel filter (for gasoline)

Kia gasoline vehicle is equipped a lifetime fuel filter that integrated with the fuel tank.
Regular maintenance or replacement is not needed but depends on fuel quality. If there are some important safety matters like fuel flow restriction, surging, loss of power, hard starting problem etc., fuel filter inspection or replace is needed.
Have the fuel filter inspected or replaced by a professional workshop. Kia recommends to visit an authorized Kia dealer/service partner.

Fuel lines fuel hoses and connections

Check the fuel lines, fuel hoses and connections for leakage and damage. Have the fuel lines, fuel hoses and connections replaced by a professional workshop. Kia recommends to visit an authorized Kia dealer/service partner.

⚠ WARNING

■ Diesel only

Never work on the injection system with the engine running or within 30 seconds after shutting off the engine. High pressure pump, rail, injectors and high pressure pipes are subject to high pressure even after the engine stops. The fuel jet produced by fuel leaks may cause serious injury, if it touches the body. People using pacemakers should not more move than 30 cm closer to the ECU or wiring harness within the engine room while the engine is running, since the high currents in the Common Rail system produce considerable magnetic fields.

Vapor hose (for gasoline engine) and fuel filler cap

The vapor hose and fuel filler cap should be inspected at those intervals specified in the maintenance schedule. Make sure that a new vapor hose or fuel filler cap is correctly replaced.

Vacuum crankcase ventilation hoses (if equipped)

Inspect the surface of hoses for evidence of heat and/or mechanical damage. Hard and brittle rubber, cracking, tears, cuts, abrasions, and excessive swelling indicate deterioration. Particular attention should be paid to examine those hose surfaces nearest to high heat sources, such as the exhaust manifold.

Inspect the hose routing to assure that the hoses do not come in contact with any heat source, sharp edges or moving component which might cause heat damage or mechanical wear. Inspect all hose connections, such as clamps and couplings, to make sure they are secure, and that no leaks are present.

Hoses should be replaced immediately if there is any evidence of deterioration or damage.

Air cleaner filter

Have the air cleaner filter replaced by a professional workshop. Kia recommends to visit an authorized Kia dealer/service partner.

Spark plugs (for gasoline engine)

Make sure to install new spark plugs of the correct heat range.

⚠ WARNING

Do not disconnect and inspect spark plugs when the engine is hot. You may burn yourself.

Valve clearance (for gasoline engine)

Inspect for excessive valve noise and/or engine vibration and adjust if necessary. In this case, have the system serviced by a professional workshop. Kia recommends to visit an authorized Kia dealer/service partner.

Cooling system

Check the cooling system components, such as the radiator, coolant reservoir, hoses and connections for leakage and damage. Replace any damaged parts.

Coolant

The coolant should be changed at the intervals specified in the maintenance schedule.

Automatic transaxle fluid

Automatic transaxle fluid should not be checked under normal usage conditions. Have the automatic transmission fluid changed by a professional workshop according to the maintenance schedule. Kia recommends to visit an authorized Kia dealer/service partner.

✻ NOTICE

Automatic transaxle fluid color is basically red.
As the vehicle is driven, the automatic transaxle fluid will begin to look darker. It is normal condition and you should not judge the need to replace the fluid based upon the changed color.

⚠ CAUTION

The use of a non-specified fluid could result in transaxle malfunction and failure.
Use only specified automatic transaxle fluid. (Refer to "Recommended lubricants and capacities" on page 8-13.)

Brake hoses and lines
Visually check for proper installation, chafing, cracks, deterioration and any leakage. Replace any deteriorated or damaged parts immediately.

Brake fluid
Check the brake fluid level in the brake fluid reservoir. The level should be between "MIN" and "MAX" marks on the side of the reservoir. Use only hydraulic brake fluid conforming to DOT 3 or DOT 4 specification.

Parking brake
Inspect the parking brake system including the parking brake pedal and cables.

Brake discs pads calipers and rotors
Check the pads for excessive wear, discs for run out and wear, and calipers for fluid leakage.
For more information on checking the pads or lining wear limit, we recommend to refer to the Kia web site. (https://www.kia-hotline.com)

Suspension mounting bolts
Check the suspension connections for looseness or damage. Retighten to the specified torque.

Steering gear box, linkage & boots/lower arm ball joint
With the vehicle stopped and engine off, check for excessive free-play in the steering wheel.
Check the linkage for bends or damage. Check the dust boots and ball joints for deterioration, cracks, or damage. Replace any damaged parts.

Drive shafts and boots
Check the drive shafts, boots and clamps for cracks, deterioration, or damage. Replace any damaged parts and, if necessary, repack the grease.

Air conditioning refrigerant
Check the air conditioning lines and connections for leakage and damage.

ENGINE OIL (GASOLINE)

Checking the engine oil level

■ THETA II 2.0L T-GDI Engine (Gasoline)

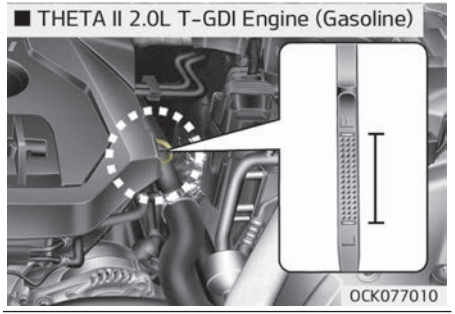

OCK077010

■ Lambda II PE 3.3L T-GDI Engine (Gasoline)

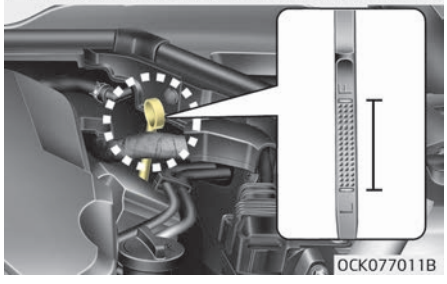

OCK077011B

1. Be sure the vehicle is on level ground.
2. Start the engine and allow it to reach normal operating temperature.
3. Turn the engine off and wait for a few minutes (about 5 minutes) for the oil to return to the oil pan.
4. Pull the dipstick out, wipe it clean, and re-insert it fully.

⚠ WARNING

■ Radiator hose

Be very careful not to touch the radiator hose when checking or adding the engine oil as it may be hot enough to burn you.

5. Pull the dipstick out again and check the level. The level should be between F (Full) and L (Low).

⚠ CAUTION

- **Do not overfill the engine oil. It may damage the engine.**
- **Do not spill engine oil, when adding or changing engine oil. If you drop the engine oil on the engine room, wipe it off immediately.**

(Continued)

(Continued)

- **When you wipe the oil level gauge, you should wipe it with a clean cloth. When mixed with debris, it can cause engine damage.**

■ THETA II 2.0L T-GDI Engine (Gasoline)

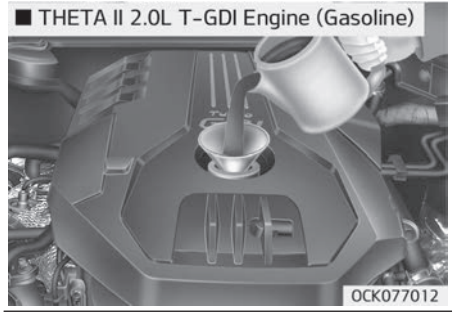

OCK077012

■ Lambda II PE 3.3L T-GDI Engine (Gasoline)

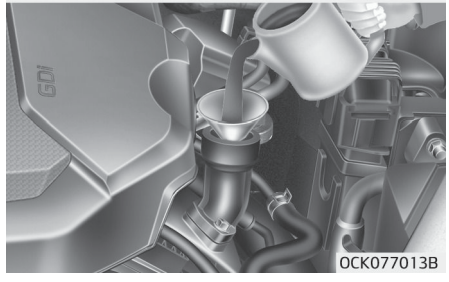

OCK077013B

If it is near or at L (Low), add enough oil to bring the level to F (Full). **Do not overfill.**
Use a funnel to help prevent oil from being spilled on engine components.

Use only the specified engine oil. (Refer to "Recommended lubricants and capacities" on page 8-13).

Changing the engine oil and filter

Have the engine oil and filter replaced by a professional workshop. Kia recommends to visit an authorized Kia dealer/service partner.

⚠ WARNING

Used engine oil may cause skin irritation or cancer if left in contact with the skin for prolonged periods of time. Used engine oil contains chemicals that have caused cancer in laboratory animals. Always protect your skin by washing your hands thoroughly with soap and warm water as soon as possible after handling used oil.

ENGINE OIL (DIESEL)

Checking the engine oil level

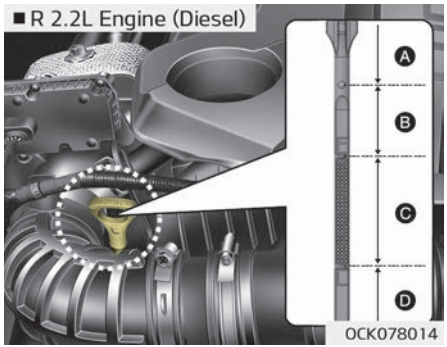

1. Be sure the vehicle is on level ground.
2. Start the engine and allow it to reach normal operating temperature.
3. Turn the engine off and wait for a few minutes (about 5 minutes) for the oil to return to the oil pan.
4. Pull the dipstick out, wipe it clean, and re-insert it fully.

⚠ WARNING

■ Radiator hose

Be very careful not to touch the radiator hose when checking or adding the engine oil as it may be hot enough to burn you.

5. Pull the dipstick out again and check the level.
6. The level should be in the C range. If the level is in the D range, add enough engine oil to bring the level up to the C range.

Figure	Required action according to the respective engine oil level
Range (A)	Contact an authorized Kia dealer/service partner.
Range (B)	Do not refill oil.
Range (C)	Normal. You may add oil as long as the oil level does not go above C-range.
Range (D)	You must add oil and make sure that the oil level is in the C-Range.

⚠ CAUTION

- **Do not spill engine oil, when adding or changing engine oil. If you drop the engine oil on the engine room, wipe it off immediately.**
- **When you wipe the oil level gauge, you should wipe it with a clean cloth. When mixed with debris, it can cause engine damage.**

■ R 2.2L Engine (Diesel)

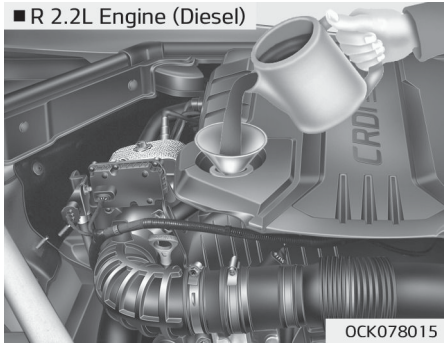

If it is near or at L (Low), add enough oil to bring the level to F (Full). **Do not overfill.**

Use only the specified engine oil. (Refer to "Recommended lubricants and capacities" on page 8-13.)

Changing the engine oil and filter

Have the engine oil and filter replaced by a professional workshop. Kia recommends to visit an authorized Kia dealer/service partner.

⚠ WARNING

Used engine oil may cause skin irritation or cancer if left in contact with the skin for prolonged periods of time. Used engine oil contains chemicals that have caused cancer in laboratory animals. Always protect your skin by washing your hands thoroughly with soap and warm water as soon as possible after handling used oil.

ENGINE COOLANT

The high-pressure cooling system has a reservoir filled with year round anti-freeze coolant. The reservoir is filled at the factory.
Check the antifreeze protection and coolant level at least once a year, at the beginning of the winter season, and before traveling to a colder climate.

⚠ CAUTION

- **When the engine overheats from low engine coolant, suddenly adding engine coolant may cause cracks in the engine. To prevent damage, add engine coolant slowly in small quantities.**
- **Do not drive with no engine coolant. It may cause water pump failure and engine seizure, etc.**

Checking the coolant level

⚠ WARNING



Removing radiator cap

- **Never attempt to remove the radiator cap while the engine is operating or hot. Doing so might lead to cooling system and engine damage. Also, hot coolant or steam could cause serious personal injury.**
- **Turn the engine off and wait until it cools down. Use extreme care when removing the radiator cap. Wrap a thick towel around it, and turn it counterclockwise slowly to the first stop. Step back while the pressure is released from the cooling system.**
  When you are sure all the pressure has been released, press down on the cap, using a thick towel, and continue turning counterclockwise to remove it.

(Continued)

(Continued)

- **Even if the engine is not operating, do not remove the radiator cap or the drain plug while the engine and radiator are hot. Hot coolant and steam may still blow out under pressure, causing serious injury.**

⚠ WARNING



The electric motor (cooling fan) is controlled by engine coolant temperature, refrigerant pressure and vehicle speed.

It may sometimes operate even when the engine is not running. Use extreme caution when working near the blades of the cooling fan so that you are not injured by a rotating fan blades. As the engine coolant temperature decreases, the electric motor will automatically shut off. This is a normal condition.
The electric motor (cooling fan) may operate until you disconnect the negative battery cable.

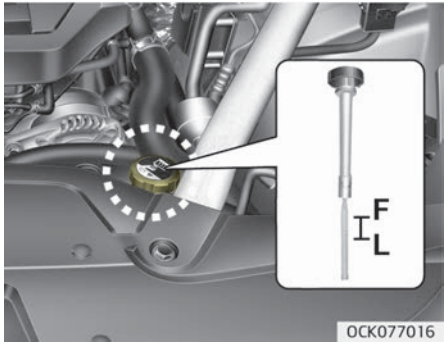

Check the condition and connections of all cooling system hoses and heater hoses. Replace any swollen or deteriorated hoses.
The coolant level should be filled between F (Full) and L (Low) marks on the coolant level gauge when the engine is cool.
If the coolant level is low, add enough specified coolant to provide protection against freezing and corrosion. Bring the level to F (Full), but do not overfill. If frequent additions are required, have the system inspected by a professional workshop. Kia recommends to visit an authorized Kia dealer/service partner.

✻ NOTICE

Make sure the coolant cap is properly closed after refill of coolant. Otherwise the engine could be overheated while driving.

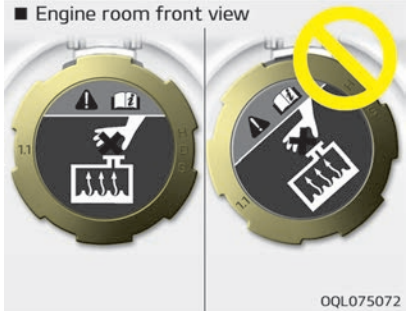

1. Check if the radiator cap label is straight In front.

(Continued)

(Continued)

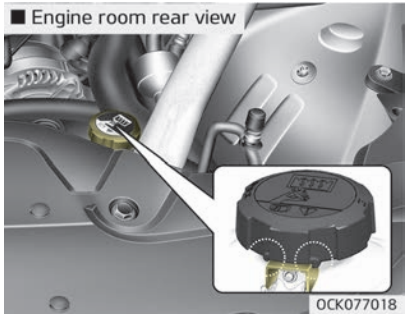

2. Make sure that the tiny protrusions inside the coolant cap should be securely interlocked.

Recommended engine coolant

- When adding coolant, use only deionized water or soft water for your vehicle and never mix hard water in the coolant filled at the factory. An improper coolant mixture can result in serious malfunction or engine damage.
- The engine in your vehicle has aluminum engine parts and must be protected by an ethylene-glycol with phosphate based coolant to prevent corrosion and freezing.

- DO NOT USE alcohol or methanol coolant or mix them with the specified coolant.
- Do not use a solution that contains more than 60% antifreeze or less than 35% antifreeze, which would reduce the effectiveness of the solution.

For mixture percentage, refer to the following table.

Ambient temperature	Mixture percentage (volume)	
	Antifreeze	Water
-15 °C (5 °F)	35	65
-25 °C (-13 °F)	40	60
-35 °C (-31 °F)	50	50
-45 °C (-49 °F)	60	40

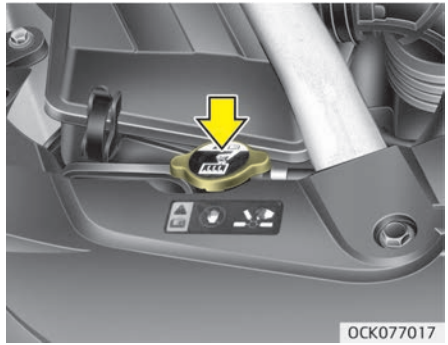

⚠ WARNING



Radiator cap

Do not remove the radiator cap when the engine and radiator are hot. Scalding hot coolant and steam may blow out under pressure causing serious injury.

Changing the coolant

Have the coolant replaced by a professional workshop. Kia recommends to visit an authorized Kia dealer/service partner.

⚠ CAUTION

Put a thick cloth around the radiator cap before refilling the coolant in order to prevent the coolant from overflowing into engine parts such as the alternator.

⚠ WARNING

■ Coolant

- **Do not use radiator coolant or antifreeze in the washer fluid reservoir.**
- **Radiator coolant can severely obscure visibility when sprayed on the windshield and may cause loss of vehicle control or damage the paint and body trim.**

BRAKE FLUID

Checking the brake fluid level

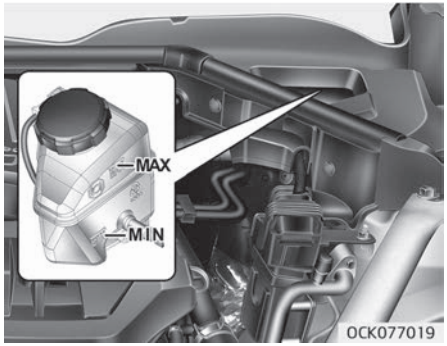

Check the fluid level in the reservoir periodically. The fluid level should be between MAX and MIN marks on the side of the reservoir.
Before removing the reservoir cap and adding brake fluid, clean the area around the reservoir cap thoroughly to prevent brake fluid contamination.
If the level is low, add fluid to the MAX level. The level will fall with accumulated mileage. This is a normal condition associated with the wear of the brake linings.

If the fluid level is excessively low, have the system checked by a professional workshop. Kia recommends to visit an authorized Kia dealer/service partner.
Use only the specified brake fluid. (Refer to "Recommended lubricants and capacities" on page 8-13.)
Never mix different types of fluid.

⚠ WARNING

■ Loss of brake fluid

In the event the brake system requires frequent additions of fluid, have the system inspected by a professional workshop. Kia recommends to visit an authorized Kia dealer/service partner.

⚠ WARNING

■ Brake fluid

When changing and adding brake fluid, handle it carefully. Do not let it come in contact with your eyes. If brake fluid should come in contact with your eyes, immediately flush
(Continued)

(Continued)

them with a large quantity of fresh tap water. Have your eyes examined by a doctor as soon as possible.

⚠ CAUTION

Do not allow brake fluid to contact the vehicle's body paint, as paint damage will result. Brake fluid, which has been exposed to open air for an extended time should never be used as its quality cannot be guaranteed. It should be properly disposed. Don't put in the wrong kind of fluid. A few drops of mineral-based oil, such as engine oil, in your brake system can damage brake system parts.

WASHER FLUID

Checking the washer fluid level

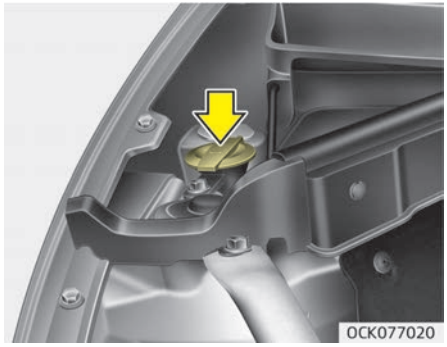

The reservoir is translucent so that you can check the level with a quick visual inspection.
Check the fluid level in the washer fluid reservoir and add fluid if necessary. Plain water may be used if washer fluid is not available. However, use washer solvent with antifreeze characteristics in cold climates to prevent freezing.

⚠ WARNING

■ Coolant

- **Do not use radiator coolant or antifreeze in the washer fluid reservoir.**
- **Radiator coolant can severely obscure visibility when sprayed on the windshield and may cause loss of vehicle control or damage to paint and body trim.**
- **Windshield Washer fluid agents contain some amounts of alcohol and can be flammable under certain circumstances. Do not allow sparks or flame to contact the washer fluid or the washer fluid reservoir. Damage to the vehicle or occupants could occur.**
- **Windshield washer fluid is poisonous to humans and animals. Do not drink and avoid contacting windshield washer fluid. Serious injury or death could occur.**

PARKING BRAKE

Checking the parking brake (if equipped)



Check whether the stroke is within specification when the parking brake pedal is depressed with 20 kg (44 lbs, 196 N) of force. Also, the parking brake alone should securely hold the vehicle on a fairly steep grade. If the stroke is more or less than specified, have the system serviced by a professional workshop. Kia recommends to visit an authorized Kia dealer/service partner.

Stroke : 3 notch

FUEL FILTER (FOR DIESEL)

Draining water from the fuel filter

The fuel filter for diesel engine plays an important role of separating water from fuel and accumulating the water in its bottom.
If water accumulates in the fuel filter, the warning light comes on when the ignition switch is in the ON position.



If this warning light illuminates, take your car to a professional workshop and have drain the water and check the system. Kia recommends to visit an authorized Kia dealer/service partner.

⚠ CAUTION

If the water accumulated in the fuel filter is not drained at proper times, damages to the major parts such as the fuel system can be caused by water permeation in the fuel filter.

Fuel filter cartridge replacement

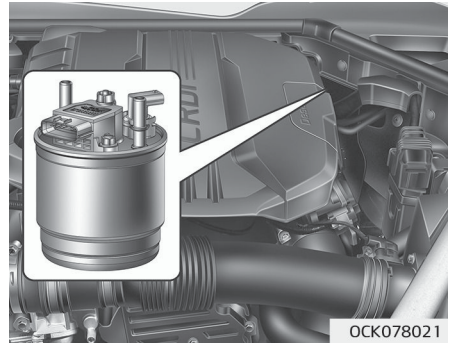

✻ NOTICE

When replacing the fuel filter cartridge, use parts for replacement from a professional workshop. Kia recommends to visit an authorized Kia dealer/service partner.

AIR CLEANER

Filter replacement

■ THETA II 2.0L T-GDI Engine (Gasoline)

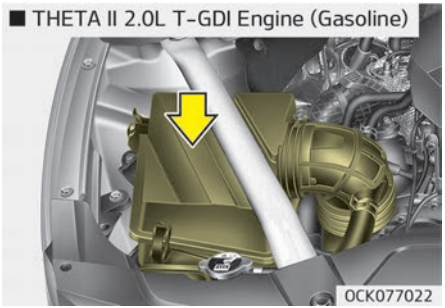

■ Lambda II PE 3.3L T-GDI Engine (Gasoline) (Passenger side)

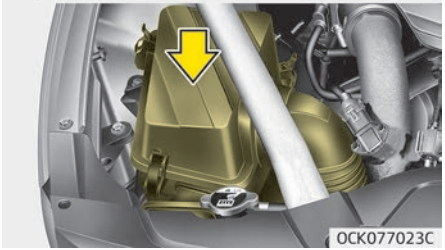

■ Lambda II PE 3.3L T-GDI Engine (Gasoline) (Driver side)

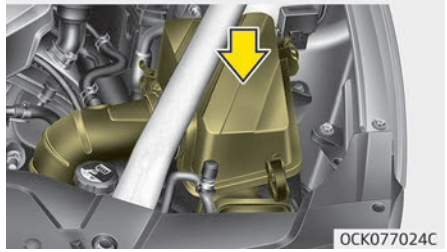

■ R 2.2L Engine (Diesel)

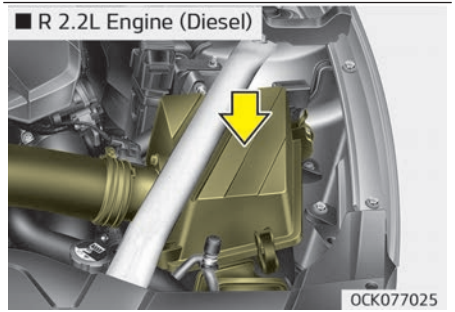

It must be replaced when necessary, and should not be washed.
Have the air cleaner filter inspected or replaced by a professional workshop. Kia recommends to visit an authorized Kia dealer/service partner.

Replace the filter according to the Maintenance Schedule.
If the vehicle is operated in extremely dusty or sandy areas, replace the element more often than the usual recommended intervals.(Refer to “Maintenance under severe usage conditions” on page 7-18.)

⚠ CAUTION

- **Do not drive with the air cleaner removed; this will result in excessive engine wear.**
- **When removing the air cleaner filter, be careful that dust or dirt does not enter the air intake, or damage may result.**
- **Use parts for replacement from a professional workshop. Kia recommends to visit an authorized Kia dealer/service partner.**

CLIMATE CONTROL AIR FILTER

Filter inspection

The climate control air filter should be replaced according to the maintenance schedule. If the vehicle is operated in severely air-polluted cities or on dusty rough roads for a long period, it should be inspected more frequently and replaced earlier. When you replace the climate control air filter, replace it performing the following procedure, and be careful to avoid damaging other components.

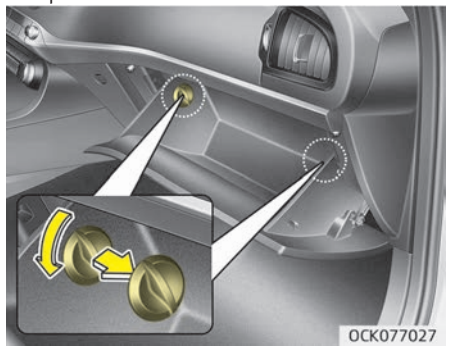

1. Open the glove box and remove the stoppers on both sides.

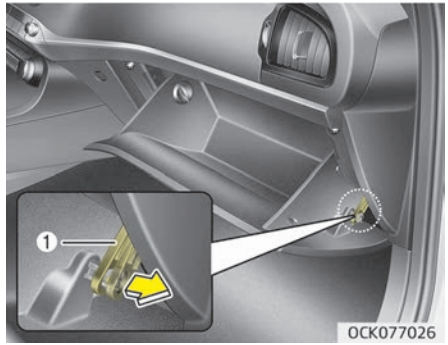

2. With the glove box open, pull the support strap (1).

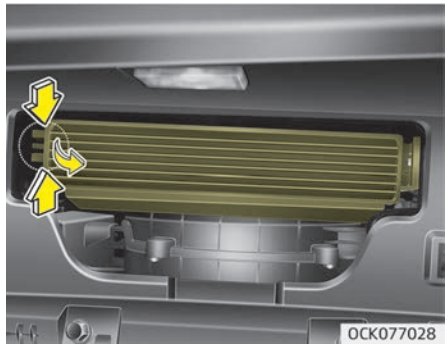

3. Remove the climate control air filter cover while pressing the lock on the left side of the cover.



4. Replace the climate control air filter.
5. Reassemble in the reverse order of disassembly.

✻ NOTICE

When replacing the climate control air filter install it properly. Otherwise, the system may produce noise and the effectiveness of the filter may be reduced.

WIPER BLADES

Blade inspection

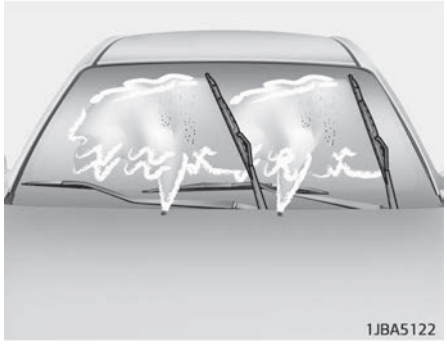

✻ NOTICE

Commercial hot waxes applied by automatic car washes have been known to make the windshield difficult to clean.

Contamination of either the windshield or the wiper blades with foreign matter can reduce the effectiveness of the windshield wipers. Common sources of contamination are insects, tree sap, and hot wax treatments used by some commercial car washes. If the blades are not wiping properly, clean both the window and the blades with a good cleaner or mild detergent, and rinse thoroughly with clean water.

⚠ CAUTION

To prevent damage to the wiper blades, do not use gasoline, kerosene, paint thinner, or other solvents on or near them.

Blade replacement

When the wipers no longer clean adequately, the blades may be worn or cracked, and require replacement.

⚠ CAUTION

To prevent damage to the wiper arms or other components, do not
(Continued)

(Continued)

attempt to move the wipers manually.

⚠ CAUTION

The use of a non-specified wiper blade could result in wiper malfunction and failure.

Front windshield wiper blade

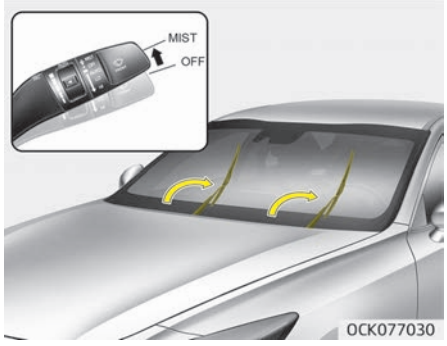

For your convenience, move the windshield wiper blades to the service position as follows;
After turning off the engine, move the wiper switch to the single wiping (MIST) position within 20 seconds and hold the switch more than 2 seconds until the wiper blade is in the fully up position.

⚠ CAUTION

Do not allow the wiper arm to fall against the windshield, since it may chip or crack the windshield.

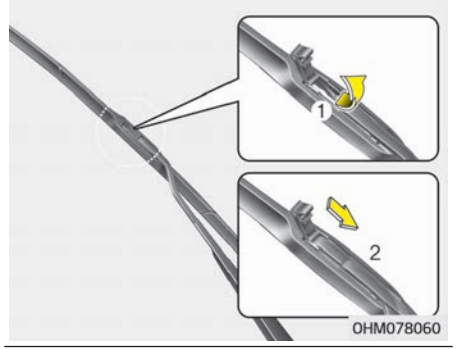

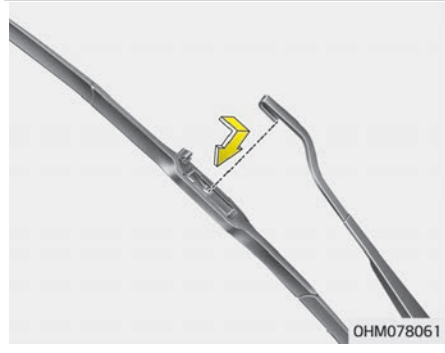

1. Raise the wiper arm.
2. Lift up the wiper blade clip. Then pull down the blade assembly and remove it.
3. Install the new blade assembly.
4. Return the wiper arm on the windshield.
5. Turn ignition to the ON position and wiper arms will return to the normal operating position.

BATTERY

Battery replacement

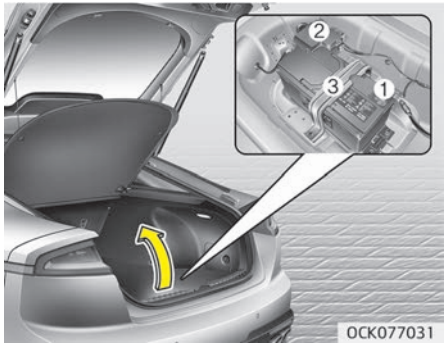

The battery is in the luggage room.
When replacing the battery, disconnect the negative (-) cable (1) and remove the positive (+) battery fuse box (2). Remove the battery mounting bracket (3).

⚠ WARNING

Turn the engine off and wait until it cools down, or luggage room floor surface may be hot. Wear gloves
(Continued)

(Continued)

when removing the battery from the luggage room.

For best battery service

- Keep the battery securely mounted.
- Keep the battery top clean and dry.
- Keep the terminals and connections clean, tight, and coated with petroleum jelly or terminal grease.
- Rinse any spilled electrolyte from the battery immediately with a solution of water and baking soda.
- If the vehicle is not going to be used for an extended time, disconnect the battery cables.

✻ NOTICE

Basically equipped battery is maintenance free type. If your vehicle is equipped with the battery marked with LOWER and UPPER on the side, you can check the electrolyte level. The electrolyte level should be be-
(Continued)

(Continued)

tween LOWER and UPPER. If the electrolyte level is low, it needs to add distilled (demineralized) water (Never add sulfuric acid or other electrolyte). When refill, be careful not to splash the battery and adjacent components. And do not overfill the battery cells. It can cause corrosion on other parts. After then ensure that tighten the cell caps. Contact a professional workshop. Kia recommends to visit an authorized Kia dealer/service partner.

⚠ WARNING

■ Battery dangers

Always read the following instructions carefully when handling a battery.

Keep lighted cigarettes and all other flames or sparks away from the battery.

(Continued)

(Continued)



Hydrogen, a highly combustible gas, is always present in battery cells and may explode if ignited.



Keep batteries out of the reach of children because batteries contain highly corrosive SULFURIC ACID. Do not allow battery acid to contact your skin, eyes, clothing or paint finish.



If any electrolyte gets into your eyes, flush your eyes with clean water for at least 15 minutes and get immediate medical attention.
If electrolyte gets on your skin, thoroughly wash the contacted area. If you feel pain or burning sensation, get medical attention immediately.



Wear eye protection when charging or working near a battery. Always provide ventilation when working in an enclosed space.

(Continued)

(Continued)



An inappropriately disposed battery can be harmful to the environment and human health. Dispose the battery according to your local law(s) or regulation.



The battery contains lead. Do not dispose of it after use. Contact a professional workshop. Kia recommends to visit an authorized Kia dealer/service partner.

- When lifting a plastic-cased battery, excessive pressure on the case may cause battery acid to leak, resulting in personal injury. Lift with a battery carrier or with your hands on opposite corners.
- Never attempt to recharge the battery when the battery cables are connected.
- The electrical ignition system works with high voltage. Never touch these components with the engine running or the ignition switched on.

(Continued)

(Continued)

Failure to follow the above warnings can result in serious bodily injury or death.

⚠ CAUTION

- When you don't use the vehicle for a long time in the low temperature area, separate the battery and keep it indoors.
- Always charge the battery fully to prevent battery case damage in low temperature area.
- If you connect unauthorized electronic devices to the battery, the battery may be discharged. Never use unauthorized devices.

Battery capacity label

■ Example

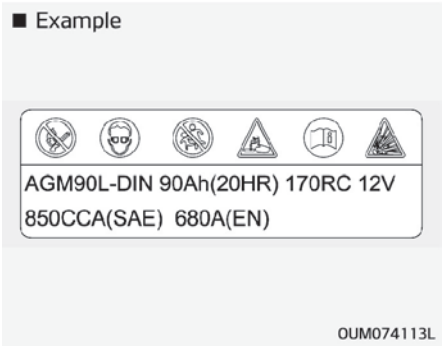

❈ The actual battery label in the vehicle may differ from the illustration.

1. AGM90L-DIN: The Kia model name of battery
2. 90Ah(20HR): The nominal capacity (in Ampere hours)
3. 170RC: The nominal reserve capacity (in min.)
4. 12V: The nominal voltage
5. 850CCA (SAE): The cold-test current in amperes by SAE
6. 680A: The cold-test current in amperes by EN

Battery recharging

Your vehicle has a maintenance-free, calcium-based battery.

- If the battery becomes discharged in a short time (because, for example, the headlights or interior lights were left on while the vehicle was not in use), recharge it by slow charging (trickle) for 10 hours.
- If the battery gradually discharges because of high electric load while the vehicle is being used, recharge it at 20-30A for two hours.

⚠ WARNING

■ Recharging battery

When recharging the battery, observe the following precautions:

- **The battery must be removed from the vehicle and placed in an area with good ventilation.**
- **Do not allow cigarettes, sparks, or flame near the battery.**

(Continued)

(Continued)

- **Watch the battery during charging, and stop or reduce the charging rate if the battery cells begin gassing (boiling) violently or if the temperature of the electrolyte of any cell exceeds 49 °C (120 °F).**
- **Wear eye protection when checking the battery during charging.**
- **Disconnect the battery charger in the following order.**

1. **Turn off the battery charger main switch.**
2. **Unhook the negative clamp from the negative battery terminal.**
3. **Unhook the positive clamp from the positive battery terminal.**

⚠ WARNING

- **Before performing maintenance or recharging the battery, turn off all accessories and stop the engine.**
- **The negative battery cable must be removed first and installed last when the battery is disconnected.**

(Continued)

(Continued)

- **Operation related to the battery is recommended to be done by a professional workshop. Kia recommends to visit an authorized Kia dealer/service partner.**

⚠ CAUTION

- **Keep the battery away from water or any liquid.**
- **For your safety, use parts for replacement from a professional workshop. Kia recommends to visit an authorized Kia dealer/service partner.**

⚠ CAUTION

■ AGM battery (if equipped)

(Continued)

(Continued)

- **Absorbent Glass Matt (AGM) batteries are maintenance free and have the AGM battery serviced by a professional workshop. Kia recommends to visit an authorized Kia dealer/service partner. For charging your AGM battery, use only fully automatic battery chargers that are specially developed for AGM batteries.**
- **When replacing the AGM battery, use parts for replacement from a professional workshop. Kia recommends to visit an authorized Kia dealer/service partner.**
- **Do not open or remove the cap on top of the battery. This may cause leaks of internal electrolyte that could result in severe injury.**

Reset items

Items should be reset after the battery has been discharged or the battery has been disconnected.

- Auto up/down window
- Sunroof
- Trip computer
- Climate control system
- Integrated Memory System
- Audio

TIRES AND WHEELS

Tire care

For proper maintenance, safety, and maximum fuel economy, you must always maintain recommended tire inflation pressures and stay within the load limits and weight distribution recommended for your vehicle.

Recommended cold tire inflation pressures

All tire pressures (including the spare) should be checked when the tires are cold. "Cold Tires" means the vehicle has not been driven for at least three hours or driven less than 1.6 km (one mile).
Recommended pressures must be maintained for the best ride, top vehicle handling, and minimum tire wear.
For recommended inflation pressure, refer to "Tires and wheels" on page 8-09.



All specifications (sizes and pressures) can be found on a label attached to the vehicle.

⚠ WARNING

■ Tire underinflation

Severe underinflation (70 kPa (10 psi, 0.7 bar) or more) can lead to severe heat build-up, causing blow-outs, tread separation and other tire failures that can result in the loss of vehicle control leading to severe injury or death. This risk is much high-

(Continued)

(Continued)

er on hot days and when driving for long periods at high speeds.

⚠ CAUTION

- **Underinflation also results in excessive wear, poor handling and reduced fuel economy. Wheel deformation also is possible. Keep your tire pressures at the proper levels. If a tire frequently needs refilling, have the system checked by a professional workshop. Kia recommends to visit an authorized Kia dealer/service partner.**
- **Overinflation produces a harsh ride, excessive wear at the center of the tire tread, and a greater possibility of damage from road hazards.**

⚠ CAUTION

- **Warm tires normally exceed recommended cold tire pressures by 28 to 41 kPa (4 to 6 psi, 0.28 to 0.41 bar) . Do not release air from warm tires to adjust the pressure or the tires will be underinflated.**
- **Be sure to reinstall the tire inflation valve caps. Without the valve cap, dirt or moisture could get into the valve core and cause air leakage. If a valve cap is missing, install a new one as soon as possible.**

⚠ WARNING

■ Tire Inflation

Overinflation or underinflation can reduce tire life, adversely affect vehicle handling, and lead to sudden tire failure. This could result in loss of vehicle control and potential injury.

⚠ CAUTION

■ Tire pressure

Always observe the following:

- **Check tire pressure when the tires are cold. (After vehicle has been parked for at least three hours or hasn't been driven more than 1.6 km (one mile) since startup.)**
- **Check the pressure of your spare tire each time you check the pressure of other tires.**
- **Never overload your vehicle. Be careful not to overload a vehicle luggage rack if your vehicle is equipped with one.**
- **Worn, old tires can cause accidents. If your tread is badly worn, or if your tires have been damaged, replace them.**

Checking tire inflation pressure

Check your tires once a month or more. Also, check the tire pressure of the spare tire.

How to check

Use a good quality gauge to check tire pressure. You can not tell if your tires are properly inflated simply by looking at them. Radial tires may look properly inflated even when they're underinflated.

Check the tire's inflation pressure when the tires are cold. - "Cold" means your vehicle has been sitting for at least three hours or driven no more than 1.6 km (1 mile). Remove the valve cap from the tire valve stem. Press the tire gauge firmly onto the valve to get a pressure measurement. If the cold tire inflation pressure matches the recommended pressure on the tire and loading information label, no further adjustment is necessary. If the pressure is low, add air until you reach the recommended amount.

If you overfill the tire, release air by pushing on the metal stem in the center of the tire valve. Recheck the tire pressure with the tire gauge. Be sure to put the valve caps back on the valve stems. They help prevent leaks by keeping out dirt and moisture.

⚠ WARNING

- **Inspect your tires frequently for proper inflation as well as wear and damage. Always use a tire pressure gauge.**
- **Tires with too much or too little pressure wear unevenly causing poor handling, loss of vehicle control, and sudden tire failure leading to accidents, injuries, and even death. The recommended cold tire pressure for your vehicle can be found in this manual and on the tire label located on the driver's side center pillar.**
- **Worn tires can cause accidents. Replace tires that are worn, show uneven wear, or are damaged.**
- **Remember to check the pressure of your spare tire. Kia recommends that you check the spare every time you check the pressure of the other tires on your vehicle.**

Tire rotation

To equalize tread wear, it is recommended that the tires be rotated every 10,000 km (6,500 miles) or sooner if irregular wear develops.

During rotation, check the tires for correct balance.
When rotating tires, check for uneven wear and damage. Abnormal wear is usually caused by incorrect tire pressure, improper wheel alignment, out-of- balance wheels, severe braking or severe cornering. Look for bumps or bulges in the tread or side of tire. Replace the tire if you find either of these conditions. Replace the tire if fabric or cord is visible. After rotation, be sure to bring the front and rear tire pressures to specification and check lug nut tightness.
Refer to “Tires and wheels” on page 8-09.

■ 17inch tire, 18inch tire

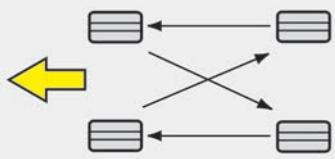

OBH078040

■ 19inch tire

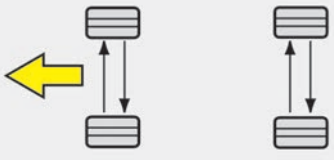

OBK079038

Disc brake pads should be inspected for wear whenever tires are rotated.

✻ NOTICE

Rotate radial tires that have an asymmetric tread pattern only from front to rear and not from right to left.

⚠ WARNING

- **Do not use the compact spare tire (if equipped) for tire rotation.**
- **Do not mix bias ply and radial ply tires under any circumstances. This may cause unusual handling characteristics that could result in death, severe injury, or property damage.**

Wheel alignment and tire balance

The wheels on your vehicle were aligned and balanced carefully at the factory to give you the longest tire life and best overall performance.
In most cases, you will not need to have your wheels aligned again. However, if you notice unusual tire wear or your vehicle pulling one way or the other, the alignment may need to be reset.

If you notice your vehicle vibrating when driving on a smooth road, your wheels may need to be rebalanced.

⚠ CAUTION

Improper wheel weights can damage your vehicle's aluminum wheels. Use only approved wheel weights.

Tire replacement



If the tire is worn evenly, a tread wear indicator (A) will appear as a solid band across the tread. This shows there is less than 1.6 mm (1/16 in.) of tread left on the tire. Replace the tire when this happens.
Do not wait for the band to appear across the entire tread before replacing the tire.

✻ NOTICE

We recommend that when replacing tires, use the same originally supplied with the vehicles. If not, that affects driving performance.

⚠ CAUTION

When replacing the tires, recheck and tighten the wheel nuts after driving about 50 km (31 miles) and recheck after driving about 1,000 km (620 miles). If the steering wheel shakes or the vehicle vibrates while driving, the tire is out of balance. Align the tire balance. If the problem is not solved, contact a professional workshop. Kia recommends to visit an authorized Kia dealer/service partner.

⚠ WARNING

■ Replacing tires

(Continued)

(Continued)

To reduce the chance of serious or fatal injuries from an accident caused by tire failure or loss of vehicle control:

- **Replace tires that are worn, show uneven wear, or are damaged. Worn tires can cause loss of braking effectiveness, steering control, and traction.**
- **Do not drive your vehicle with too little or too much pressure in your tires. This can lead to uneven wear and tire failure.**
- **When replacing tires, never mix radial and bias-ply tires on the same car. You must replace all tires (including the spare) if moving from radial to bias-ply tires.**
- **Using tires and wheels other than the recommended sizes could cause unusual handling characteristics and poor vehicle control, resulting in a serious accident.**

(Continued)

(Continued)

- **Wheels that do not meet Kia's specifications may fit poorly and result in damage to the vehicle or unusual handling and poor vehicle control.**
- **The ABS works by comparing the speed of the wheels. The tire size affects wheel speed. When replacing tires, all 4 tires must use the same size originally supplied with the vehicle. Using tires of a different size can cause the ABS (Anti-lock Brake System) and ESC (Electronic Stability Control) to work irregularly.**

Compact spare tire replacement (if equipped)

A compact spare tire has a shorter tread life than a regular size tire. Replace it when you can see the tread wear indicator bars on the tire. The replacement compact spare tire should be the same size and design tire as the one provided with your new vehicle and should be mounted on the same compact spare tire wheel. The compact spare tire is not designed to be mounted on a regular size wheel, and the compact spare tire wheel is not designed for mounting a regular size tire.

Wheel replacement

When replacing the metal wheels for any reason, make sure the new wheels are equivalent to the original factory units in diameter, rim width and offset.

⚠ WARNING

A wheel that is not the correct size may adversely affect wheel and bearing life, braking and stopping abilities, handling characteristics, ground clearance, body-to-tire
(Continued)

(Continued)

clearance, snow chain clearance, speedometer and odometer calibration, headlight aim and bumper height.

Tire traction

Tire traction can be reduced if you drive on worn tires, tires that are improperly inflated or on slippery road surfaces. Tires should be replaced when tread wear indicators appear. Slow down whenever there is rain, snow or ice on the road to reduce the possibility of losing control of the vehicle.

Tire maintenance

In addition to proper inflation, correct wheel alignment helps to decrease tire wear. If you find a tire is worn unevenly, have a professional workshop check the wheel alignment. Kia recommends to visit an authorized Kia dealer/service partner.

When you have new tires installed, make sure they are balanced. This will increase vehicle ride comfort and tire life. Additionally, a tire should always be rebalanced if it is removed from the wheel.

Tire sidewall labeling

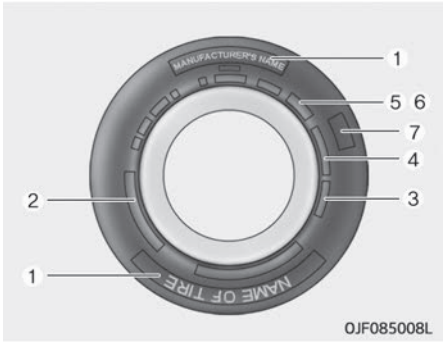

This information identifies and describes the fundamental characteristics of the tire and also provides the tire identification number (TIN) for safety standard certification. The TIN can be used to identify the tire in case of a recall.

1. Manufacturer or brand name

Manufacturer or Brand name is shown.

2. Tire size designation

A tire's sidewall is marked with a tire size designation. You will need this information when selecting replacement tires for your vehicle. The following explains what the letters and numbers in the tire size designation mean.

Example tire size designation: (These numbers are provided as an example only; your tire size designator could vary depending on your vehicle.)

P235/55R19 108T

- P – Applicable vehicle type (tires marked with the prefix "P" are intended for use on passenger vehicles or light trucks; however, not all tires have this marking).
- 235 – Tire width in millimeters.
- 55 – Aspect ratio. The tire's section height as a percentage of its width.
- R – Tire construction code (Radial).
- 19 – Rim diameter in inches.
- 108 – Load Index, a numerical code associated with the maximum load the tire can carry.
- T – Speed Rating Symbol. See the speed rating chart in this section for additional information.

Wheel size designation

Wheels are also marked with important information that you need if you ever have to replace one. The following explains what the letters and numbers in the wheel size designation mean.

Example wheel size designation: **7.5J x 19**

- 7.5 – Rim width in inches.
- J – Rim contour designation.
- 19 – Rim diameter in inches.

Tire speed ratings

The chart below lists many of the different speed ratings currently being used for passenger car tires. The speed rating is part of the tire size designation on the sidewall of the tire. This symbol corresponds to that tire's designed maximum safe operating speed.

Speed Rating Symbol	Maximum Speed
S	180 km/h (112 mph)
T	190 km/h (118 mph)
H	210 km/h (130 mph)
V	240 km/h (149 mph)
W	270 km/h (168 mph)
Y	300 km/h (186 mph)
Z	Above 240 km/h (149 mph)

3. Checking tire life (TIN: Tire Identification Number)

Any tires that are over 6 years old, based on the manufacturing date, (including the spare tire) should be replaced by new ones. You can find the manufacturing date on the tire sidewall (possibly on the inside of the wheel), displaying the DOT Code. The DOT Code is a series of numbers on a tire consisting of numbers and English letters. The manufacturing date is designated by the last four digits (characters) of the DOT code.

DOT : XXXX XXXX 0000

The front part of the DOT means a plant code number, tire size and tread pattern and the last four numbers indicate week and year manufactured.

For example:

DOT XXXX XXXX 1618 represents that the tire was produced in the 16th week of 2018.

⚠ WARNING

■ Tire age

Tires degrade over time, even when they are not being used.
Regardless of the remaining tread, we recommend that tires be replaced after approximately six (6) years of normal service. Heat caused by hot climates or frequent high loading conditions can accelerate the aging process. Failure to follow this warning can result in sudden tire failure, which could lead to a loss of control and an accident involving serious injury or death.

4. Tire ply composition and material

The number of layers or plies of rubber- coated fabric in the tire. Tire manufacturers also must indicate the materials in the tire, which include steel, nylon, polyester, and others. The letter "R" means radial ply construction; the letter "D" means diagonal or bias ply construction; and the letter "B" means belted-bias ply construction.

5. Maximum permissible inflation pressure

This number is the greatest amount of air pressure that should be put in the tire. Do not exceed the maximum permissible inflation pressure. Refer to the Tire and Loading Information label for recommended inflation pressure.

6. Maximum load rating

This number indicates the maximum load in kilograms and pounds that can be carried by the tire. When replacing the tires on the vehicle, always use a tire that has the same load rating as the factory installed tire.

7. Uniform tire quality grading

Quality grades can be found where applicable on the tire sidewall between tread shoulder and maximum section width.
For example:
TREADWEAR 200
TRACTION AA
TEMPERATURE A

Tread wear

The tread wear grade is a comparative rating based on the wear rate of the tire when tested under controlled conditions on a specified government test course. For example, a tire graded 150 would wear one-and-a half times (1½) as well on the government course as a tire graded 100.
The relative performance of tires depends upon the actual conditions of their use, however, and may depart significantly from the norm due to variations in driving habits, service practices and differences in road characteristics and climate.
These grades are molded on the sidewalls of passenger vehicle tires. The tires available as standard or optional equipment on your vehicle may vary with respect to grade.

Traction - AA, A, B & C

The traction grades, from highest to lowest, are AA, A, B and C. Those grades represent the tire's ability to stop on wet pavement as measured under controlled conditions on specified government test surfaces of asphalt and concrete. A tire marked C may have poor traction performance.

Temperature – A, B & C

The temperature grades are A (the highest), B, and C, representing the tire's resistance to the generation of heat and its ability to dissipate heat when tested under controlled conditions on a specified indoor laboratory test wheel.
Sustained high temperature can cause the material of the tire to degenerate and reduce tire life, and excessive temperature can lead to sudden tire failure. Grades B and A represent higher levels of performance on the laboratory test wheel than the minimum required by law.

⚠ WARNING

The traction grade assigned to this tire is based on straight ahead braking traction tests, and does not include acceleration, cornering, hydroplaning, or peak traction characteristics.

⚠ WARNING

■ Tire temperature

The temperature grade for this tire is established for a tire that is properly inflated and not overloaded. Excessive speed, underinflation, or excessive loading, either separately or in combination, can cause heat buildup and possible sudden tire failure. This can cause loss of vehicle control and serious injury or death.

Low aspect ratio tire (if equipped)

Low aspect ratio tires, whose aspect ratio is lower than 50, are provided for sporty looks.
Because the low aspect ratio tires are optimized for handling and braking, it may be more uncomfortable to ride in and there is more noise compare with normal tires.

⚠ CAUTION

Because the sidewall of the low aspect ratio tire is shorter than the normal, the wheel and tire of the low aspect ratio tire is easier to be damaged. So, follow the instructions below.

- **When driving on a rough road or off road, drive cautiously because tires and wheels may be damaged. And after driving, inspect tires and wheels.**
- **When passing over a pothole, speed bump, manhole, or curb stone, drive slowly so that the tires and wheels are not damaged.**
- **If the tire is impacted, inspect the tire condition or contact a professional workshop. Kia recommends to visit an authorized Kia dealer/service partner.**
- **To prevent damage to the tire, inspect the tire condition and pressure every 3,000 km.**

(Continued)

(Continued)

- **It is not easy to recognize the tire damage with your own eyes. But if there is the slightest hint of tire damage, even though you cannot see the tire damage with your own eyes, have the tire checked or replaced because the tire damage may cause air leakage from the tire.**
- **If the tire is damaged by driving on a rough road, off road, pothole, manhole, or curb stone, it will not be covered by the warranty.**
- **You can find out the tire information on the tire sidewall.**

FUSES

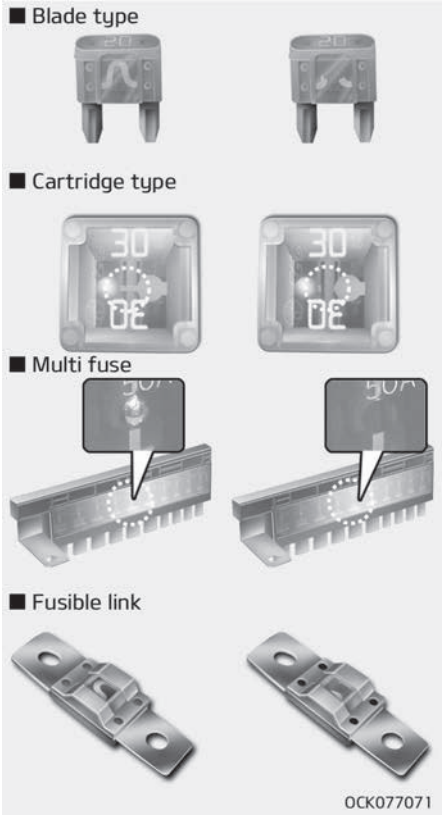

❊ Left side : Normal
Right side : Blown

A vehicle's electrical system is protected from electrical overload damage by fuses.

This vehicle has 4 (or 5) fuse panels, one located in the driver's side panel bolster, the others in the engine compartment near the battery.

If any of your vehicle's lights, accessories, or controls do not work, check the appropriate circuit fuse. If a fuse has blown, the element inside the fuse will melt.

If the electrical system does not work, first check the driver's side fuse panel.

Before replacing a blown fuse, disconnect the negative battery cable.

Always replace a blown fuse with one of the same rating.

If the replacement fuse blows, this indicates an electrical problem. Avoid using the system involved and immediately consult a professional workshop. Kia recommends to consult an authorized Kia dealer/service partner.

Three kinds of fuses are used: blade type for lower amperage rating, cartridge type, and multi fuse for higher amperage ratings.

⚠ WARNING

■ Fuse replacement

- **Never replace a fuse with anything but another fuse of the same rating.**
- **A higher capacity fuse could cause damage and possibly a fire.**
- **Never install a wire or aluminum foil instead of the proper fuse even as a temporary repair. It may cause extensive wiring damage and a possible fire.**
- **Do not arbitrarily modify or add-on electric wiring of the vehicle.**

⚠ CAUTION

Do not use a screwdriver or any other metal object to remove fuses because it may cause a short circuit and damage the system.

✻ NOTICE

- When replacing fuse, turn the ignition "OFF" and turn off switches of all electrical devices then remove battery (-) terminal.
- The actual fuse/relay panel label may differ from equipped items.

⚠ CAUTION

- **When replacing a blown fuse or relay with a new one, make sure the new fuse or relay fits tightly into the clips. The incomplete fastening fuse or relay may cause the vehicle wiring and electric systems damage and a possible fire.**

(Continued)

(Continued)

- **Do not remove fuses, relays and terminals fastened with bolts or nuts. The fuses, relays and terminals may be fastened incompletely, and it may cause a possible fire. If fuses, relays and terminals fastened with bolts or nuts are blown, consult a professional workshop. Kia recommends to consult an authorized Kia dealer/service partner.**
- **Do not input any other objects except fuses or relays into fuse/relay terminals such as a driver or wiring. It may cause contact failure and system malfunction.**
- **Do not plug in screwdrivers or aftermarket wiring into the terminal originally designed for fuse and relays only. The electrical system and wiring of the vehicle interior may be damaged or burned due to contact failure.**
- **If you directly connect the wire on the taillight or replace the bulb which is over the regulated capacity to install trailers etc., the inner junction block can get burned.**

⚠ CAUTION

Visually inspect the battery cap to ensure it is securely closed. If the battery cap is not securely closed, moisture may enter the system and damage the electrical components.

✻ NOTICE

■ Random wiring prohibited when retrofitting equipment

Use of random wiring in the vehicle might cause danger due to failure and damage of the vehicle's performance.
Using random wires especially when retrofitting AVN or theft alarm system, remote engine control, car phone or radio might damage the vehicle or cause fire.

✻ NOTICE

■ Remodeling Prohibited

(Continued)

(Continued)

Do not try remodeling the vehicle in any way. It is illegal, and may affect the vehicle's performance, durability, and safety. Warranty is also not provided for problems caused by remodeling.
Be aware of safety problems caused by remodeling the vehicle with unauthorized electrical devices (lamp, black box, electrical equipment, diagnostic device, communication device, etc.). It might cause malfunction of the vehicle, wiring damage, battery discharge, connector damage, or fire. the vehicle or cause fire.

✻ NOTICE

■ Window tinting precaution

Window tint (especially metallic film) might cause communication disorder or poor radio reception, and malfunction of the automatic lighting system due to excessive change of

(Continued)

(Continued)

illumination inside the vehicle. The solution used might also flow into electric, electronic devices causing disorder and failure.

Inner panel fuse replacement



1. Turn the ignition switch and all other switches off.
2. Open the fuse panel cover.
   If the switch is located in the "OFF", caution will be displayed in the cluster.

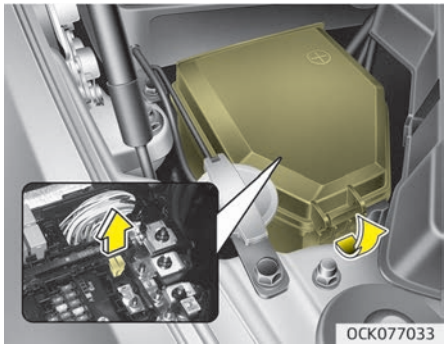

3. Pull the suspected fuse straight out. Use the removal tool provided in the main fuse box in the engine compartment.
4. Check the removed fuse; replace it if it is blown.
   Spare fuses are provided in the instrument panel fuse panel (or in the engine compartment fuse panel).
5. Push in a new fuse of the same rating, and make sure it fits tightly in the clips.

If it fits loosely, consult a professional workshop. Kia recommends to consult an authorized Kia dealer/service partner.

If you do not have a spare, use a fuse of the same rating from a circuit you may not need for operating the vehicle, such as the cigarette lighter fuse.
If the headlights or taillights, stoplights, courtesy lamp, day time running lights (D.R.L) do not work and the fuses are OK, check the fuse panel in the engine compartment. If a fuse is blown, it must be replaced.

Fuse switch

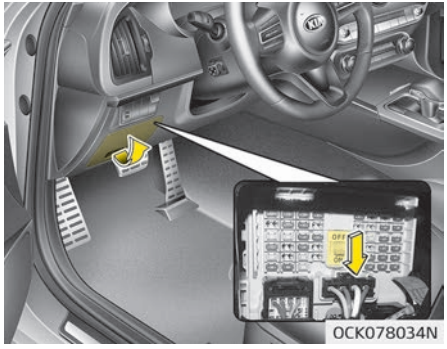

Always, put the fuse switch at the ON position.
If you move the switch to the OFF position, some items such as audio and digital clock must be reset and transmitter (or smart key) may not work properly.

If the fuse switch is in OFF, a warning sign will illuminate on the dashboard.

⚠ CAUTION

- **Put the fuse switch in ON when driving.**
- **If the vehicle is not used for over 1 month, put the fuse switch in OFF to prevent the batteries from being discharged.**
- **Excluding long-term parking for over 1 month, the contact points of the fuse switch may wear out upon extensive use.**
  Please refrain from excessive use of the fuse switch.

Engine compartment fuse replacement

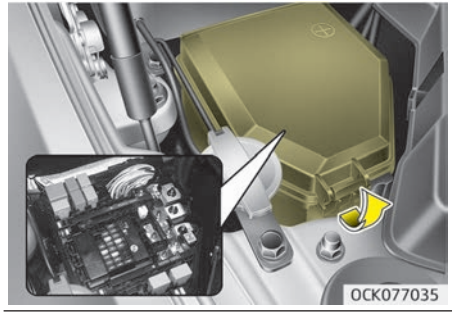

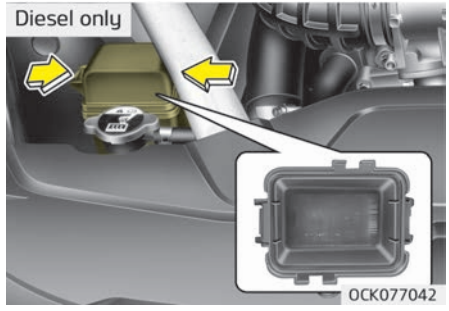

1. Turn the ignition switch and all other switches off.

2. Remove the fuse panel cover by pressing the tab and pulling the cover up. When the blade type fuse is disconnected, remove it by using the clip designed for changing fuses located in the engine room fuse box. Upon removal, securely insert reserve fuse of equal quantity.
3. Check the removed fuse; replace it if it is blown. To remove or insert the fuse, use the fuse puller in the engine compartment fuse panel.
4. Push in a new fuse of the same rating, and make sure it fits tightly in the clips. If it fits loosely, consult a professional workshop. Kia recommends to consult an authorized Kia dealer/service partner.

⚠ CAUTION

After checking the fuse panel in the engine compartment, securely install the fuse panel. If not, cover through the audible clicking sound. Electrical failures may occur from water contact.

Multi fuse

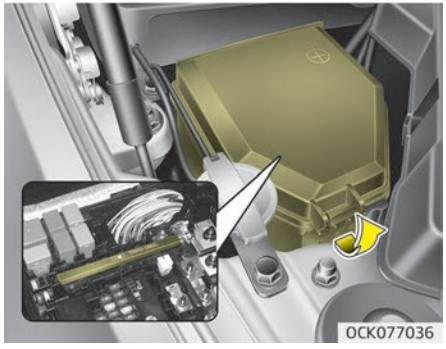

If the multi fuse is blown, it must be removed as follows:

1. Disconnect the negative battery cable.
2. Remove the nuts shown in the picture above.
3. Replace the fuse with a new one of the same rating.
4. Reinstall in the reverse order of removal.

✻ NOTICE

If the multi fuse is blown, consult a professional workshop. Kia recommends to consult an authorized Kia dealer/service partner.

Main fuse

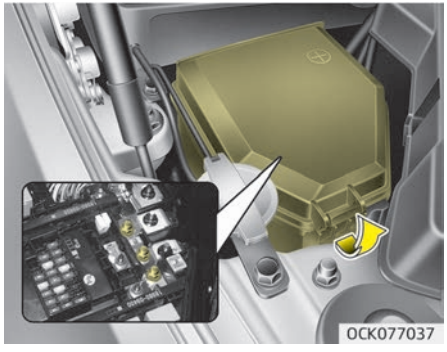

If the main fuse is blown, it must be removed as follows:

1. Turn off the engine.
2. Disconnect the negative battery cable.

3. Remove the nuts shown in the picture above.
4. Replace the fuse with a new one of the same rating.
5. Reinstall in the reverse order of removal

If the main fuse is blown, even though the engine compartment panel fuse and inner fuse are not blown, if the electrical system is not operated, the main fuse may be blown. The main fuse is connected with other parts and system. Contact a professional workshop. Kia recommends to visit an authorized Kia dealer/service partner.

Fuse-relay panel description

■ Driver's side fuse panel

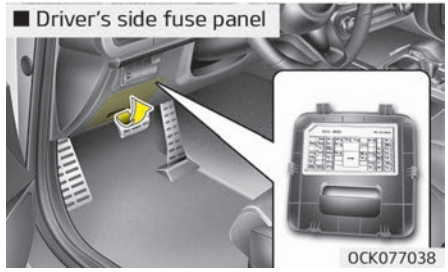

■ Engine compartment fuse panel

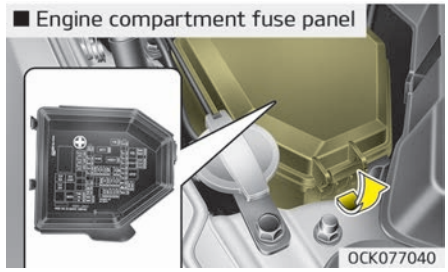

■ Engine compartment fuse panel (Diesel engine) (Passenger side)

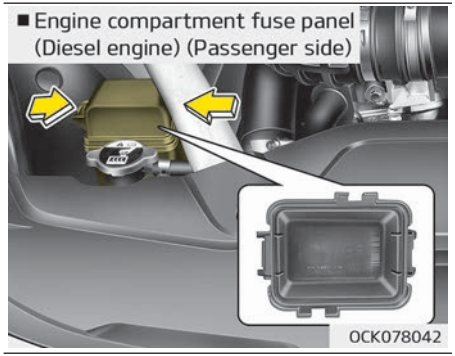

■ Rear fuse box panel

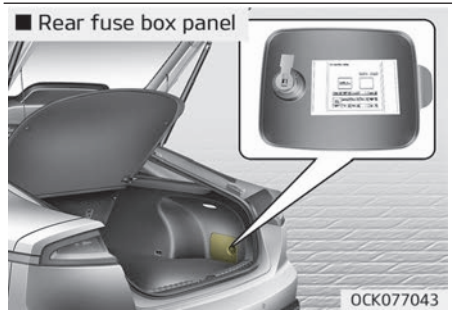

■ Battery box fuse panel

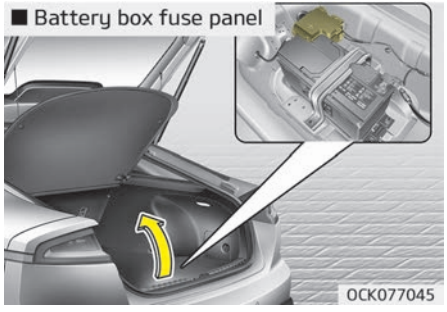

Inside the fuse/relay panel covers, you can find the fuse/relay label describing fuse/relay name and capacity.

✻ NOTICE

Not all fuse panel descriptions in this manual may be applicable to your vehicle. It is accurate at the time of printing. When you inspect the fuse panel in your vehicle, refer to the fuse panel label.

Driver's side fuse panel

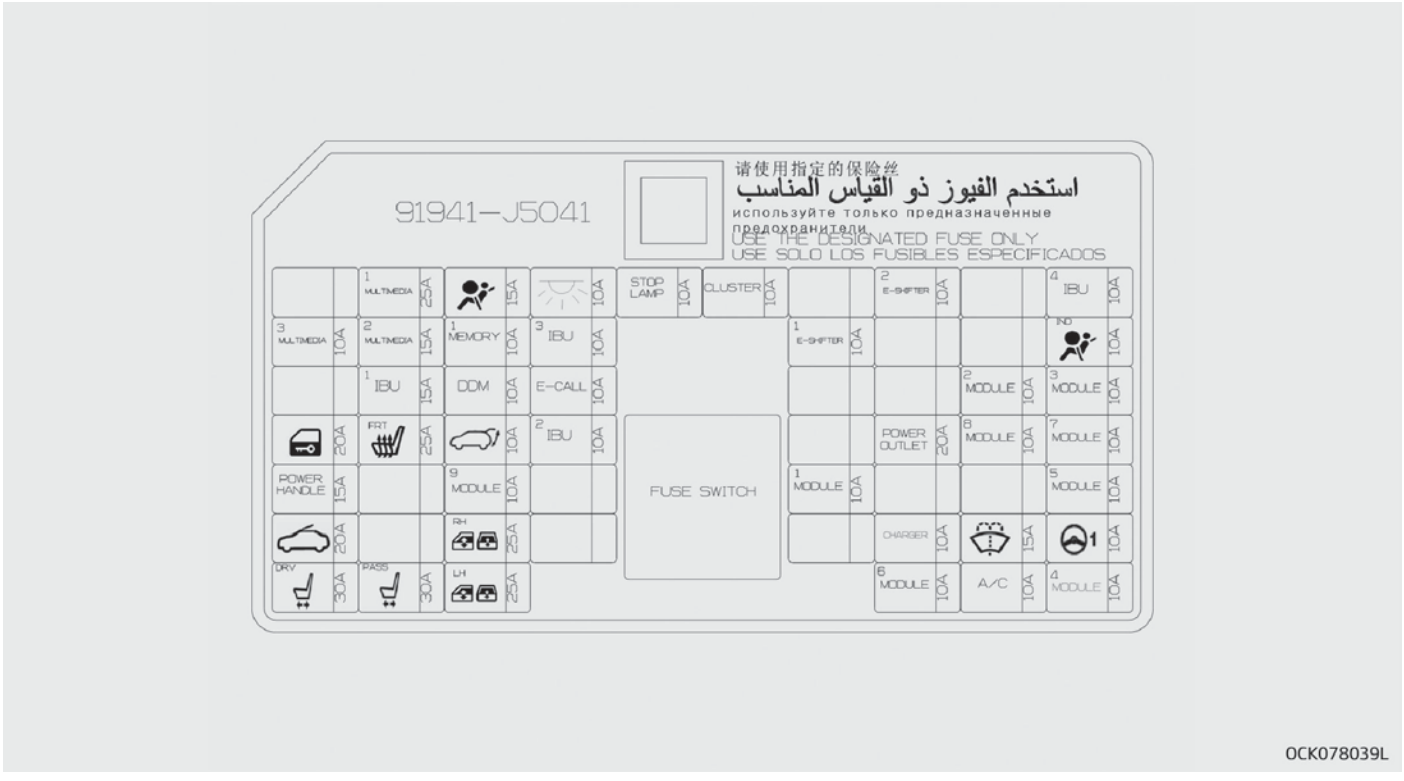

Instrument panel (Driver's side fuse panel)

Fuse Name	Symbol	Fuse rating	
MULTI MEDIA 1	1 MULTI MEDIA	25A	[Without ISG] Fuse - MULTI MEDIA 3, MULTI MEDIA 2 [With ISG] Low DC-DC Converter (Audio)
AIR BAG		15A	SRS (Supplemental Restraint System) Control Module
ROOM LAMP		10A	Overhead Console Lamp, Center Room Lamp, Room Lamp, Vanity Lamp Switch Left Handle side/Right Handle side, Luggage Lamp Left Handle side/Right Handle side, Glove Box Lamp, Driver/Passenger Door Mood Lamp, Driver/Passenger Door Lamp, Driver/Passenger Foot Lamp
STOP LAMP	STOP LAMP	10A	IBU, Stop Lamp Switch
CLUSTER	CLUSTER	10A	Instrument Cluster, Head-Up Display
E-SHIFTER 2	2 E-SHIFTER	10A	Electronic Auto Transmission Shift Lever (IG1)
IBU 4	4 IBU	10A	IBU (IG1)
MULTI MEDIA 3	3 MULTI MEDIA	10A	[With ISG] Instrument Cluster, Head-Up Display, Air Conditioner Switch, Wireless Charger
MULTI MEDIA 2	2 MULTI MEDIA	15A	Audio
MEMORY 1	1 MEMORY	10A	Air Conditioner Control Module, Air Conditioner Switch, Security Indicator, Head-Up Display [Without ISG] Instrument Cluster
IBU 3	3 IBU	10A	IBU (B+)
E-SHIFTER 1	1 E-SHIFTER	10A	Electronic Auto Transmission Shift Lever (B+)

Fuse Name	Symbol	Fuse rating	
AIR BAG IND.		10A	Instrument Cluster, Hazard Switch
IBU 1		15A	IBU (B+)
DRIVER DOOR MODULE	DDM	10A	Driver Door Module, Driver/Passenger Power Outside Mirror
E-CALL	E-CALL	10A	MTS (Mozen Telematics System) E-Call Module
MODULE 2		10A	IBU (IG2)
MODULE 3		10A	Auto Transmission Shift Lever Switch, Driver Door Module, Stop Lamp Switch
DOOR LOCK		20A	Door Lock Relay, Door Unlock Relay, Dead Lock Relay
SEAT HEATER		25A	Front Air Ventilation Seat Control Module, Front Seat Warmer Control Module
TAIL GATE		10A	Tail Gate Lid Relay, Fuel Lid Relay, Crash Pad Switch
IBU 2		10A	IBU (B+ (ESCL)), Rain Sensor
POWER OUTLET	POWER OUTLET	20A	Front Power Outlet
MODULE 8		10A	Cooling Fan Controller (BLDC Motor), Around View Monitor, Front Air Ventilation Seat Control Module, Front/Rear Seat Warmer Control Module

Fuse Name	Symbol	Fuse rating	
MODULE 7	7 MODULE	10A	IBU, ECS Unit, AWD (All Wheel Drive) ECM (Electronic Control Module), Smart Cruise Control Module, Auto Transmission Shift Lever Indicator, Console Switch (Front/Upper), Blind-Spot Collision Warning Unit Left Handle side/Right Handle side, Steering Angle Sensor, Steering Tilt & Telescopic Module, Lane Keeping Assist (LKA) system, Electronic Control Engine Mounting Module
POWER HANDLE	POWER HANDLE	15A	Steering Tilt & Telescopic Module
MODULE 9	9 MODULE	10A	Driver Air Lumbar Control Unit
MODULE 1	1 MODULE	10A	Data Link Connector, Console Switch (Upper), Electronic Control Engine Mounting Module (R 2.2L Engine)
MODULE 5	5 MODULE	10A	Air Conditioner Control Module, Air Conditioner Switch, Audio, Head Lamp Left Handle side/Right Handle side, Low DC-DC Converter (Audio/AMP (Amplifier)), Electro Chromic Mirror, AMP (Amplifier), MTS (Mozen Telematics System) E-Call Module, Driver Integrated memory system Control Module, Front Air Ventilation Seat Control Module, Front/Rear Seat Warmer Control Module
SUNROOF		20A	Sunroof Control Unit (Glass)
PASSENGER POWER WINDOW	RH	25A	Passenger Power Window Module, Rear Power Window Module Right Handle side
CHARGER	CHARGER	10A	Front/Rear USB Charger
WASHER		15A	Multifunction Switch
MDPS		10A	MDPS (Motor Driven Power Steering) Unit (R-MDPS (Motor Driven Power Steering))
DRIVER POWER SEAT	DRV	30A	Driver Integrated memory system Control Module, Driver Manual Switch

Fuse Name	Symbol	Fuse rating	
PASSENGER POWER SEAT		30A	Passenger Manual Switch
DRIVER POWER WINDOW		25A	Driver Power Window Module, Rear Power Window Module Left Handle side
MODULE 6		10A	IBU, Around View Monitor, Audio, AMP (Amplifier), MTS (Mozen Telematics System) E-Call Module, Low DC-DC Converter (Audio/AMP (Amplifier)), Wireless Charger, Electronic Auto Transmission Shift Lever (SBW (Shift By Wire)), Engine Room Junction Block (Power Outlet Relay)
A/C		10A	Air Conditioner Control Module, Air Conditioner Switch, Engine Room Junction Block (Blower Relay), Diesel Junction Block (PTC Heater #2/#3 Relay)
MODULE 4		10A	Head Lamp Left Handle side/Right Handle side, AFS Control Unit, Auto Head Lamp Leveling Device Module

Engine compartment fuse panel

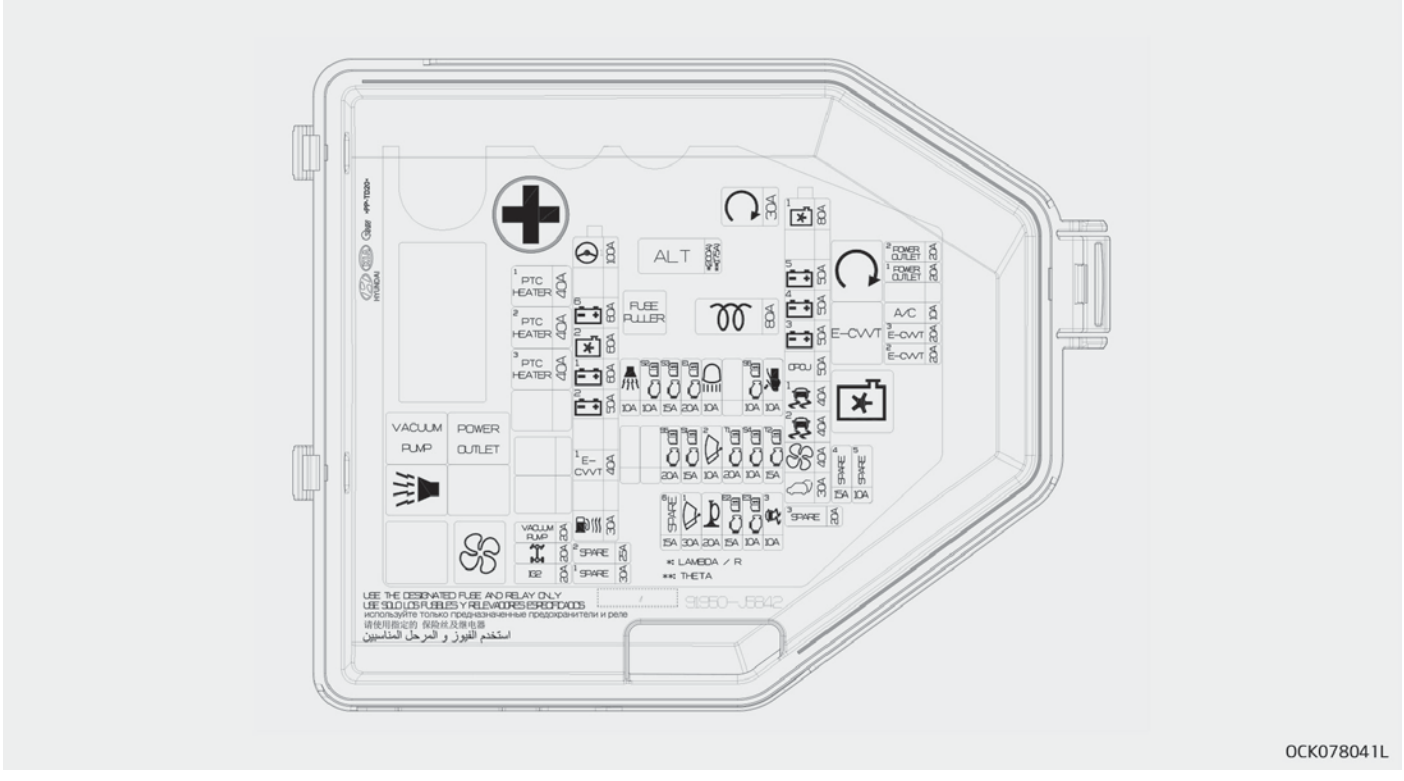

Engine room compartment fuse panel

Fuse Name	Symbol	Fuse rating	Circuit Protected
ALT	ALT	175A 200A	Alternator, Fuse - GLOW, Multi Fuse - C/FAN1 / B+5 / B+4 / B+3 / OPCU / ESC1 / ESC2 / BLOWER / TAIL GATE
GLOW		80A	[R 2.2L Engine] Glow Relay Unit
START		30A	Start Relay
C/FAN 1	1	80A	[BLDC (Brushless Direct Current) Motor] Cooling Fan Controller
B+5	5	50A	Instrument Panel Junction Block (Fuse - STOP LAMP / MULTI MEDIA1 / MULTI MEDIA3 / MULTI MEDIA2 / MEMORY1 / IBU3 / DRIVER DOOR MODULE / E-CALL)
B+4	4	50A	Instrument Panel Junction Block (Fuse - DOOR LOCK / POWER HANDLE / SUNROOF / DRIVER POWER SEAT / PASSENGER POWER SEAT)
B+3	3	50A	Instrument Panel Junction Block (Fuse - SEAT HEATER / TAIL GATE / MODULE9 / PASSENGER POWER WINDOW / DRIVER POWER WINDOW)
OPCU	OPCU	50A	[With ISG] Electric Oil Pump Inverter
ESC 1	1	40A	ESC (Electronic Stability Control) Control Module
ESC 2	2	40A	ESC (Electronic Stability Control) Control Module, Multipurpose Check Connector
BLOWER		40A	Blower Relay
TAIL GATE		30A	Power Tail Gate Module

Fuse Name	Symbol	Fuse rating	Circuit Protected
MDPS		100A	MDPS (Motor Driven Power Steering) Unit
B+6		60A	Engine Control Relay, Fuse - HORN / WIPER1 / H/BEAM H/LAMP / B/ALARM)
C/FAN 2		60A	[DC (Direct Current) Motor] Cooling Fan Relay
B+1		60A	Instrument Panel Junction Block (Fuse - IBU1 / IBU2)
B+2		50A	Instrument Panel Junction Block (Fuse - E-SHIFTER1 / MODULE1)
E-CVVT 1		40A	[THETA II 2.0L T-GDI Engine] E-CVVT Relay
FUEL FILTER		30A	[R 2.2L Engine] Diesel Junction Block (Fuel Filter Heater Relay)
PTC HEATER 1		40A	[R 2.2L Engine] Diesel Junction Block (PTC Heater #1 Relay)
PTC HEATER 2		40A	[R 2.2L Engine] Diesel Junction Block (PTC Heater #2 Relay)
PTC HEATER 3		40A	[R 2.2L Engine] Diesel Junction Block (PTC Heater #3 Relay)
VACUUM PUMP		20A	[THETA II 2.0L T-GDI Engine/Lambda II PE 3.3L T-GDI Engine] Vacuum Pump Relay
AWD		20A	AWD (All Wheel Drive) ECM (Electronic Control Module)
IG 2		20A	IG2 Relay
POWER OUTLET 2		20A	Front Power Outlet #2
POWER OUTLET 1		20A	Front Power Outlet #1
A/CON		10A	Air Conditioner Control Module
E-CVVT 3		20A	[THETA II 2.0L T-GDI Engine] ECM (Engine Control Module)

Fuse Name	Symbol	Fuse rating	Circuit Protected
E-CVVT 2	E-CVVT	20A	[THETA II 2.0L T-GDI Engine] ECM (Engine Control Module)
ESC 3		10A	ESC (Electronic Stability Control) Control Module, Multipurpose Check Connector
ECU 3		10A	ECM (Engine Control Module)
ECU 2		15A	ECM (Engine Control Module)
HORN		20A	Horn Relay
WIPER 1		30A	Wiper Power Relay
TCU 2		15A	TCM (Transmission Control Module)
SENSOR 4		10A	[THETA II 2.0L T-GDI Engine/Lambda II PE 3.3L T-GDI Engine] Brake Vacuum Switch, Brake Vacuum Relay [With ISG] Electric Oil Pump Inverter
TCU 1		20A	TCM (Transmission Control Module)
WIPER 2		10A	Wiper Power Relay
SENSOR 1		15A	[THETA II 2.0L T-GDI Engine] Oxygen Sensor (Up) [Lambda II PE 3.3L T-GDI Engine] Oxygen Sensor #2/#4 [R 2.2L Engine - With EURO 6C] Electromotion Water Pump [R 2.2L Engine - W/O EURO 6C] Electronic VGT (Variable Geometry Turbocharger), Actuator, Lambda Sensor #1/#2
IGN COIL	IGN COIL	20A	[THETA II 2.0L T-GDI Engine] Ignition Coil #1/#2/#3/#4 [Lambda II PE 3.3L T-GDI Engine] Ignition Coil #1/#2/#3/#4/#5/#6
ACTIVE HOOD	ACTIVE HOOD	10A	Active Hood Lift Control Module
SENSOR 5		10A	[R 2.2L Engine] Glow Relay Unit, Diesel Fuel Heater, Dosing Control Module (With EURO 6C)

Fuse Name	Symbol	Fuse rating	Circuit Protected
H/BEAM H/LAMP		10A	Head Lamp (High) Relay
ECU 1		20A	ECM (Engine Control Module)
SENSOR 3		15A	[THETA II 2.0L T-GDI Engine] Oxygen Sensor (Down) [Lambda II PE 3.3L T-GDI Engine] Oxygen Sensor #1/#3 [R 2.2L Engine] Rail Pressure Regulating Valve, Fuel Pressure Regulating Valve [With EURO 6C] Electronic VGT (Variable Geometry Turbocharger) Actuator, Lambda Sensor #1/#2, Front / Rear NOX SENSOR, PM Sensor
SENSOR 2		10A	Cooling Fan Relay, Rear Sub Junction Block (Fuel Pump Relay) [THETA II 2.0L T-GDI Engine] Electronic Thermostat, Oil Control Valve, Purge Control Solenoid Valve, RCV (Recirculation Valve Control) Control Solenoid Valve [Lambda II PE 3.3L T-GDI Engine] Electronic Thermostat, Oil Pressure Solenoid Valve, Oil Control Valve #1/#2/#3/#4 (Intake/Exhaust), RCV (Recirculation Valve Control) Control Solenoid Valve, Purge Control Solenoid Valve [R 2.2L Engine] Oil Pump Solenoid Valve, Mass Air Flow Sensor, Oil Pressure & Temperature Sensor, Stop Lamp Switch, Crankshaft Position Sensor, Diesel Junction Block (Fuel Filler Relay/PTC Heater #1 Relay)
B/ALARM		10A	Burglar Alarm Horn Relay

Relay

Relay Name	Symbol	Type
Vacuum Pump Relay	VACUUM PUMP	ISO HC MICRO

Relay Name	Symbol	Type
Burglar Alarm Horn Relay		ISO MICRO
Power Outlet Relay		ISO HC MICRO
Blower Relay		ISO HC MICRO
Start Relay		ISO HC MICRO
E-CVVT Relay (G4KL)		ISO MICRO
Cooling Fan Relay		3725 MINI

Engine compartment fuse panel (Diesel engine) (Passenger side)

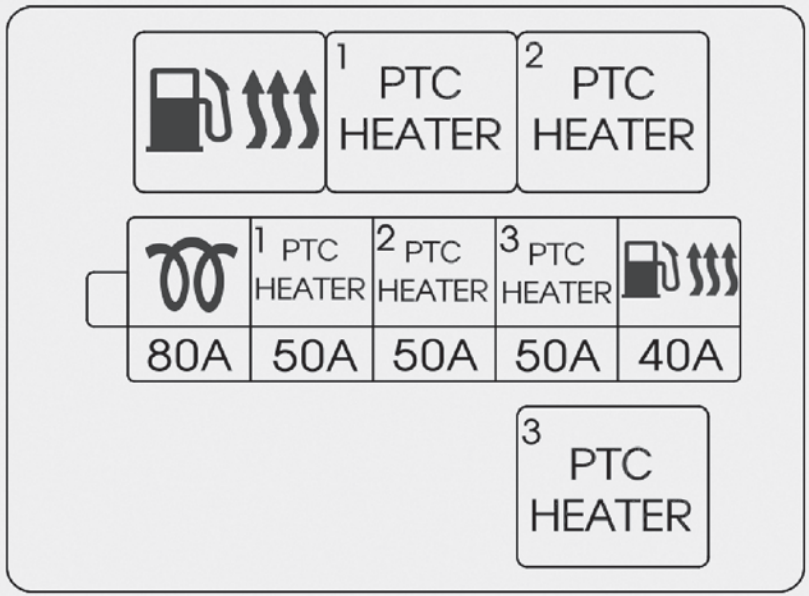

OJF076099L

Engine compartment fuse panel (Diesel engine)

Fuse Name	Symbol	Fuse rating	Circuit Protected
GLOW		80A	Glow Relay Unit
PTC Heater 1		50A	PTC Heater #1 Relay
PTC Heater 2		50A	PTC Heater #2 Relay
PTC Heater 3		50A	PTC Heater #3 Relay
Fuel Filter Heater		40A	Fuel Filter Heater Relay

Relay Name	Symbol	Type
Fuel Filter Heater		ISO HC MICRO
PTC Heater 1		ISO HC MICRO
PTC Heater 2		ISO HC MICRO
PTC Heater 3		ISO HC MICRO

Rear fuse box panel

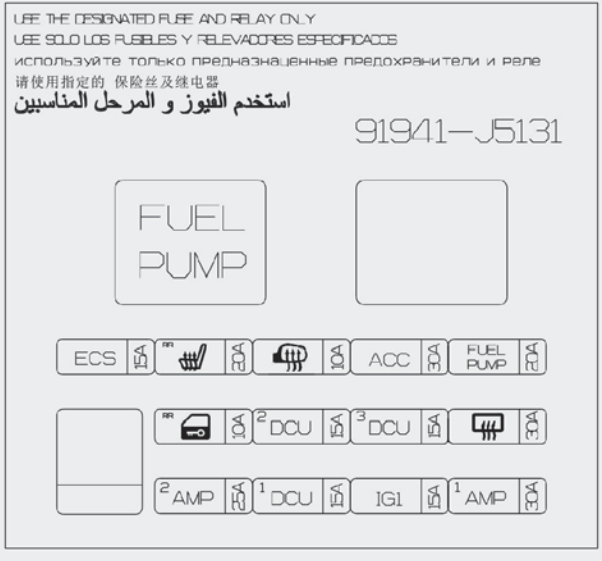

OCK078044L

Rear fuse box panel

Fuse Name	Symbol	Fuse rating	Circuit Protected
ECS	ECS	15A	ECS (Electronic Control Suspension) Unit
REAR S/HEAT	RR	20A	Rear Seat Warmer Control Module
HEAT MIRROR		10A	Air Conditioner Switch, Driver/Passenger Power Outside Mirror
FUEL PUMP	FUEL PUMP	20A	Fuel Pump Relay
DEAD LOCK	RR	10A	Rear Door Lock Actuator Left Handle side/Right Handle side (RHD)
DCU 2	2 DCU	15A	Dosing Control Module (R 2.2L Engine - EURO 6C)
DCU 3	3 DCU	15A	Dosing Control Module (R 2.2L Engine - EURO 6C)
REAR HEATED		30A	Rear Heated Relay
AMP 2	2 AMP	25A	AMP (Amplifier) (MOBIS/PREMIUM)
DCU 1	1 DCU	15A	Dosing Control Module (R 2.2L Engine - EURO 6C)
AMP 1	1 AMP	30A	[Without ISG] Fuse - AMP2 [With ISG] Low DC-DC Converter (AMP (Amplifier))
IG 1	IG 1	15A	IG1 Relay
ACC	ACC	30A	ACC Relay

Battery box fuse panel

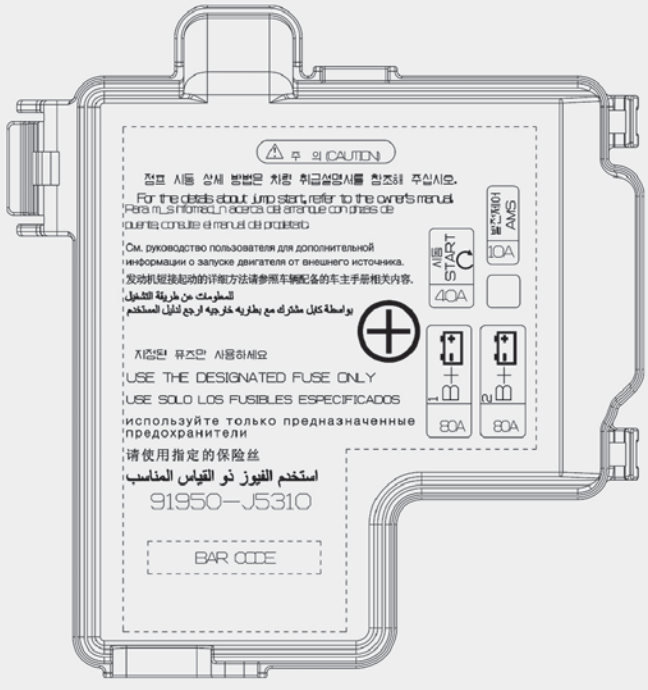

OCK077046

Battery box fuse panel

Fuse Name	Symbol	Fuse rating	Circuit Protected
B+1		80A	Rear Sub Junction Block (Fuse - FUEL PUMP / REAR HEATED/ AMP1)
B+2		80A	Rear Sub Junction Block (DCU Relay, Fuse - ECS1 / REAR S/ HEAT / IG1)
START		40A	Engine Room Junction Block (Power Outlet Relay), Fuse -START / ECU2 / TCU1)
AMS	AMS	10A	Battery Sensor

LIGHT BULBS

Bulb replacement precaution

Please prepare bulbs with appropriate standards in case of emergencies (Refer to "Bulb wattage" on page 8-07 for further information).
When changing bulbs and sorts, first turn off the engine at a safe place, firmly apply the side brake and take out the battery's negative (-) terminal.

⚠ WARNING

■ Working on the lights

Prior to working on the light, firmly apply the parking brake, ensure that the ignition switch is turned to the LOCK position and turn off the lights to avoid sudden movement of the vehicle and burning your fingers or receiving an electric shock.

Use only the bulbs of the specified wattage.

⚠ WARNING

Be sure to replace the burned out bulb with one of the same wattage rating. Otherwise, it may cause extensive wiring damage and possible fire.

⚠ CAUTION

If you don't have necessary tools, the correct bulbs and the expertise, consult a professional workshop. Kia recommends to consult an authorized Kia dealer/service partner.
In many cases, it is difficult to replace vehicle light bulbs because other parts of the vehicle must be removed before you can get to the bulb. This is especially true if you have to remove the headlight assembly to get to the bulb(s). Removing/ installing the headlight assembly can result in damage to the vehicle.

⚠ CAUTION

- **If unauthentic parts or substandard lights are used when changing lights, it may lead to fuse disconnection and malfunction, and other wiring damages.**
- **Do not install extra lamps or LED to the vehicle. If supplementary lights are installed, it may lead to lamp malfunction and flickering of the lights. In addition, the fuse box and other writing may be damaged.**

- Lamp part malfunction due to network failure
  The headlamp, taillight, and fog light may lit up when the head lamp switch is turned ON, and not light up when the taillight or for light switch is turned ON. This may be cause by network failure or vehicle electrical control system malfunction. If there is a problem, have the system serviced by a professional workshop. Kia recommends to visit an authorized Kia dealer/service partner.

- **Lamp part malfunction due to electrical control system stabilization**
  A normally functioning lamp may flicker momentarily. This momentary occurrence is due to stabilization unction of the vehicle's electrical on control system. If the lamp soon returns to normal, the vehicle does not require service.
  However, if the lamp goes out after he momentary flickering, or the flickering continues, have the system serviced by a professional workshop. Kia recommends to visit an authorized Kia dealer/service partner.

✻ NOTICE

- If the light bulb or lamp connector is removed from an operating lamp activated by electricity, the fuse box's electronic device may scan it as a malfunction. Therefore, a lamp malfunction history may be recorded in Diagnostic Trouble Code (DTC) in the fuse box.

(Continued)

(Continued)

- It is normal for an operating lamp may blink temporarily. Since this occurrence is due stabilization function of the vehicle's electronic control device, if the lamp lights up normally after temporary blinking, there is no problem in the vehicle. However, if the lamp continues to blink several times or turn off completely, there may be an error in the vehicle's electronic control device. In this case, have the vehicle checked by a professional workshop immediately. Kia recommends to visit an authorized Kia dealer/service partner.

✻ NOTICE

After an accident or after the headlight assembly is reinstalled, have the headlight aiming adjusted by a professional workshop. Kia recommends to visit an authorized Kia dealer/service partner.

✻ NOTICE

After driving in heavy rain or washing, headlamp and taillamp lenses could appear frosty. This condition is caused by the temperature difference between the lamp inside and outside. This is similar to the condensation on your windows inside your vehicle during the rain and doesn't indicate a problem with your vehicle. If the water leaks into the lamp bulb circuitry, have the vehicle checked by a professional workshop. Kia recommends to visit an authorized Kia dealer/service partner.

Light bulb position (Front)

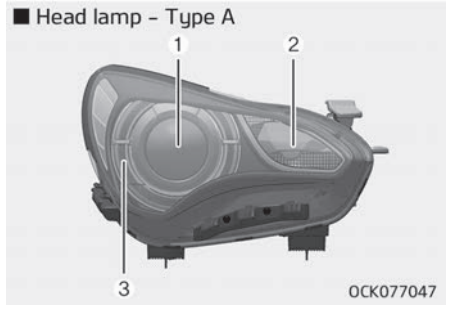

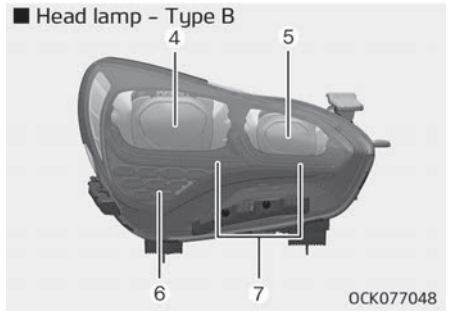

1. Headlamp (Low/High) (bulb type)
2. Front turn signal lamp (bulb type)
3. Day time running lamp / Position lamp (LED type)
4. Headlamp (Low/High) (LED type)
5. Headlamp (Low/High assist) (LED type)
6. Front turn signal lamp (LED type)
7. Day time running lamp / Position lamp (LED type)

Light bulb position (Rear)

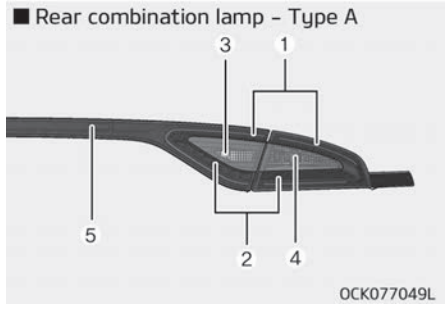

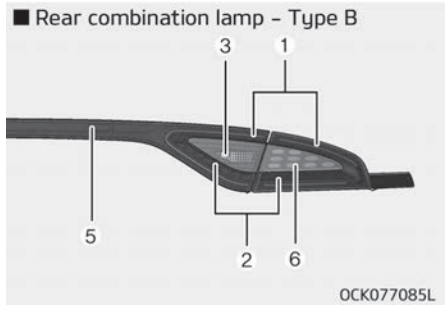

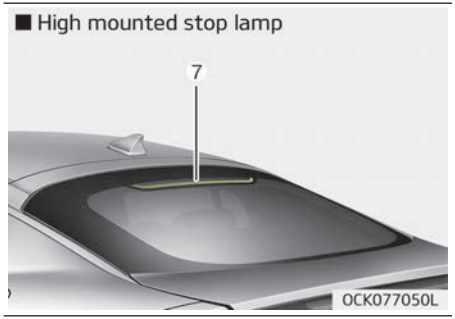

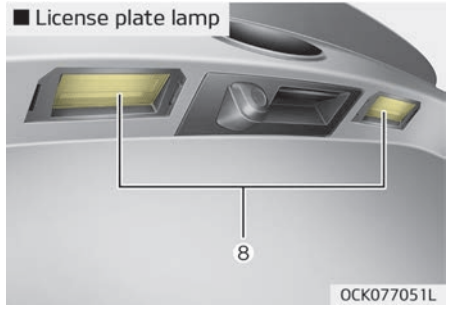

1. Stop and tail lamp (LED type)
2. Stop lamp (LED type)
3. Back-up lamp (bulb type)
4. Rear turn signal lamp (bulb type)
5. Rear fog lamp (LED type)
6. Rear turn signal lamp (LED type)

7. High mounted stop lamp (LED type)
8. License plate lamp (LED type)

Light bulb position (Side)

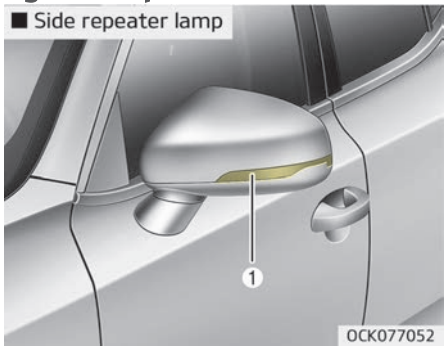

1. Side repeater lamp (LED type)

Headlamp (LED type) replacement (Headlamp Type B)

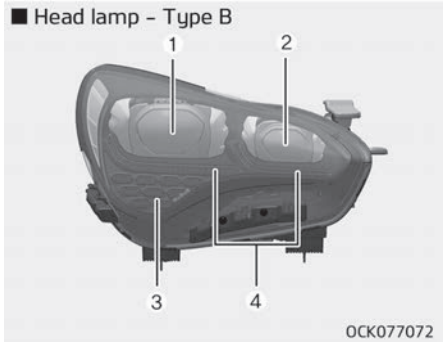

If the Low/High beam lamp(1,2), Front turn signal lamp(3), Day time running lamp/Position lamp(4) does not operate, have your vehicle checked by a professional workshop.
Kia recommends to visit an authorized Kia dealer/service partner.
The LED lamps cannot be replaced as a single unit because it is an integrated unit. The LED lamps has to be replaced with the unit.
A skilled technician should check or repair the head lamp (LED), for it may damage related parts of the vehicle.

Position lamp + DRL (LED type) bulb replacement (Headlamp Type A)

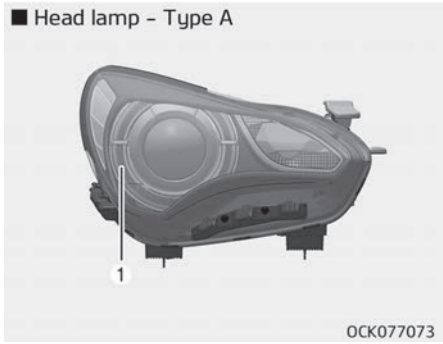

If the position lamp + DRL (LED) (1) does not operate, have your vehicle checked by a professional workshop.
Kia recommends to visit an authorized Kia dealer/service partner.
The LED lamps cannot be replaced as a single unit because it is an integrated unit. The LED lamps has to be replaced with the unit.
A skilled technician should check or repair the position lamp + DRL (LED), for it may damage related parts of the vehicle.

Headlamp (Low/High beam) bulb replacement (Headlamp Type A)

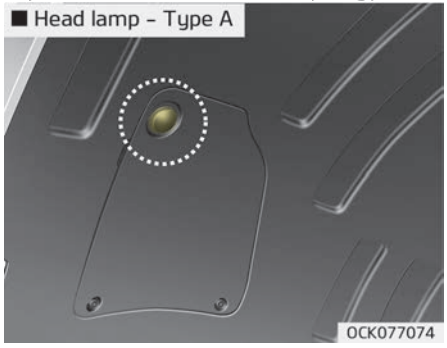

1. Remove the service cover clip on the wheel housing.

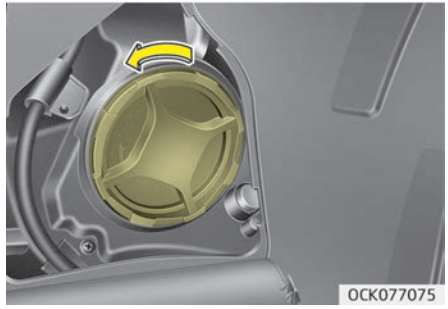

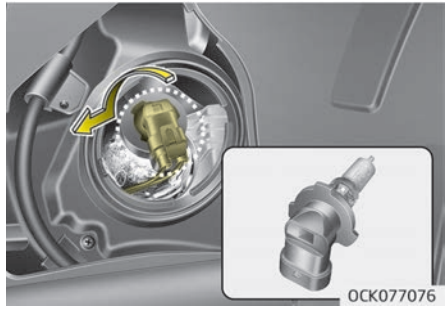

2. Remove the headlamp bulb cover by turning it counterclockwise.
3. Disconnect the headlamp bulb socket-connector.
4. Remove the bulb-socket from the headlamp assembly by turning the bulb-socket counterclockwise until the tabs on the bulb-socket align with the slots on the headlamp assembly.
5. Install a new bulb-socket assembly in the headlamp assembly by aligning the tabs on the bulb-socket with the slots in the headlamp assembly. Push the bulb-socket into the headlamp assembly and turn the bulb-socket clockwise.
6. Connect the headlamp bulb socket-connector.
7. Install the headlamp bulb cover by turning it clockwise.
8. Install the clip on the service cover.

❊ If it is difficult to replace light bulbs, have your vehicle checked by a professional workshop. Kia recommends to visit an authorized Kia dealer/service partner.

Headlamp bulb



⚠ WARNING

■ Halogen bulbs

- **Halogen bulbs contain pressurized gas that will produce flying pieces of glass if broken.**

(Continued)

(Continued)

- **Always handle them carefully, and avoid scratches and abrasions. If the bulbs are lit, avoid contact with liquids. Never touch the glass with bare hands. Residual oil may cause the bulb to overheat and burst when lit.**
  A bulb should be operated only when installed in a headlight.
- **If a bulb becomes damaged or cracked, replace it immediately and carefully dispose of it.**
- **Wear eye protection when changing a bulb. Allow the bulb to cool down before handling it.**

Front turn signal lamp bulb replacement (Headlamp Type A)

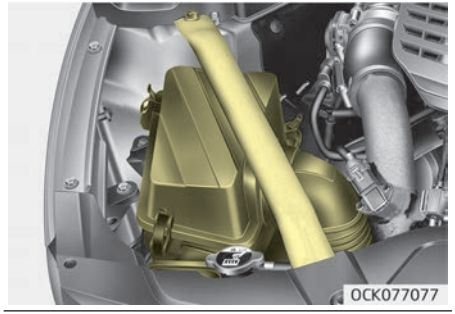

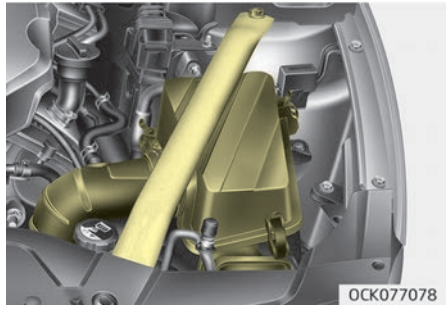

1. Open the hood.
2. Remove the strut bar and the air cleaner assembly.

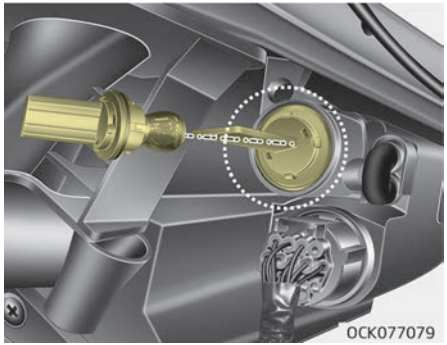

3. Remove the bulb-socket from the headlamp assembly by turning the bulb-socket counterclockwise until the tabs on the bulb-socket align with the slots on the headlamp assembly.
4. Remove the bulb from the bulb-socket by pressing it in and rotating it counterclockwise until the tabs on the bulb align with the slots in the bulb-socket. Pull the bulb out of the bulb-socket.
5. Insert a new bulb by inserting it into the bulb-socket and rotating it until it locks into place.
6. Install the socket in the headlamp assembly by aligning the tabs on the bulb-socket with the slots in the assembly. Push the bulb-socket into the headlamp assembly and turn the socket clockwise.
7. Install the strut bar and the air cleaner assembly.

❇ If it is difficult to replace light bulbs, have your vehicle checked by a professional workshop. Kia recommends to visit an authorized Kia dealer/service partner.

Stop and tail lamp (LED type) bulb replacement

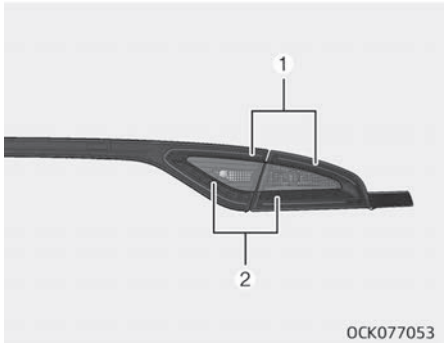

If the stop and tail lamp (LED) (1,2), does not operate, have your vehicle checked by a professional workshop.
Kia recommends to visit an authorized Kia dealer/service partner.
The LED lamps cannot be replaced as a single unit because it is an integrated unit. The LED lamps has to be replaced with the unit.
A skilled technician should check or repair the stop and tail lamp (LED), for it may damage related parts of the vehicle.

Rear fog lamp (LED type) bulb replacement

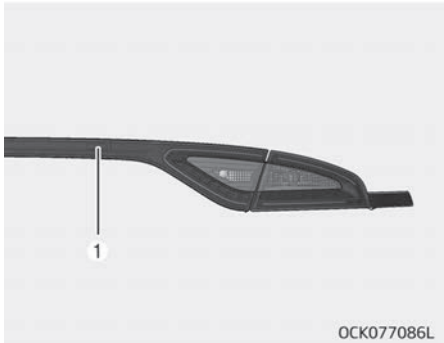

If the rear fog lamp (LED) (1), does not operate, have your vehicle checked by a professional workshop.
Kia recommends to visit an authorized Kia dealer/service partner.
The LED lamps cannot be replaced as a single unit because it is an integrated unit. The LED lamps has to be replaced with the unit.
A skilled technician should check or repair the rear fog lamp (LED), for it may damage related parts of the vehicle.

Rear turn signal lamp (LED type) bulb replacement

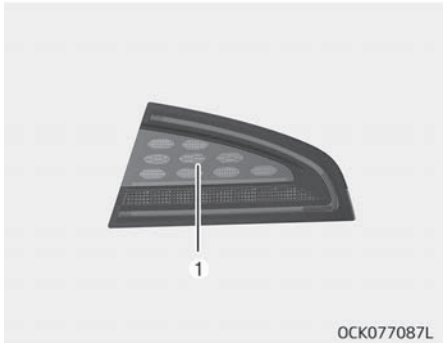

If the rear turn signal lamp (LED) (1), does not operate, have your vehicle checked by a professional workshop.
Kia recommends to visit an authorized Kia dealer/service partner.
The LED lamps cannot be replaced as a single unit because it is an integrated unit. The LED lamps has to be replaced with the unit.
A skilled technician should check or repair the rear turn signal lamp (LED), for it may damage related parts of the vehicle.

Rear turn signal lamp (bulb type) bulb replacement

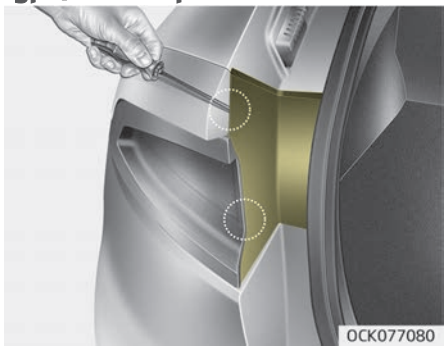

1. Open the tailgate.
2. Open the service cover.



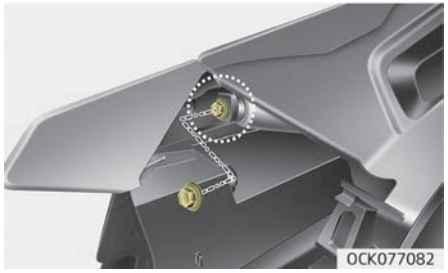

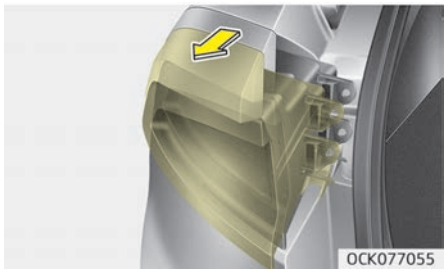

3. Loosen the light assembly retaining screws with a cross-tip screwdriver or spanner.
4. Remove the rear combination lamp assembly from the body of the vehicle.
5. Disconnect the rear combination lamp connector.

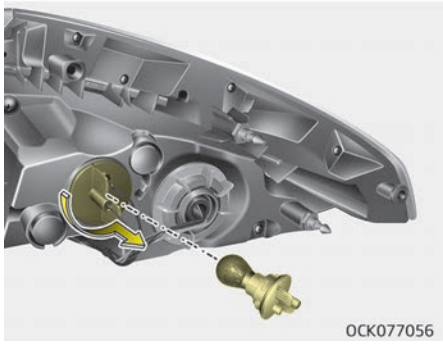

6. Remove the socket from the assembly by turning the socket counterclockwise until the tabs on the socket align with the slots on the assembly.
7. Remove the bulb from the socket by pressing it in and rotating it counterclockwise until the tabs on the bulb align with the slots in the socket. Pull the bulb out of the socket.
8. Insert a new bulb by inserting it into the socket and rotating it until it locks into place.
9. Install the socket in the assembly by aligning the tabs on the socket with the slots in the assembly. Push the socket into the assembly and turn the socket clockwise.
10. Install the rear combination lamp assembly to the body of the vehicle.
11. Install the service cover.

Back-up lamp bulb replacement

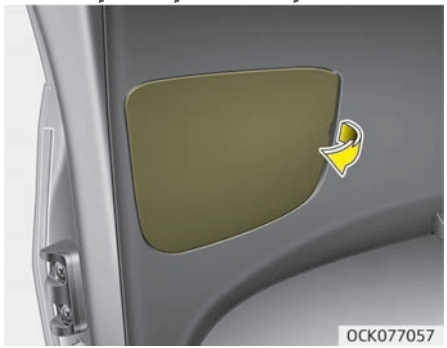

1. Open the tailgate.
2. Remove the service cover of both side (drive side and passenger side).

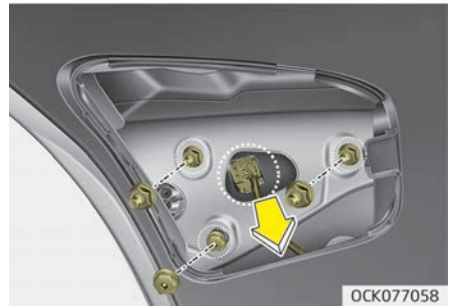

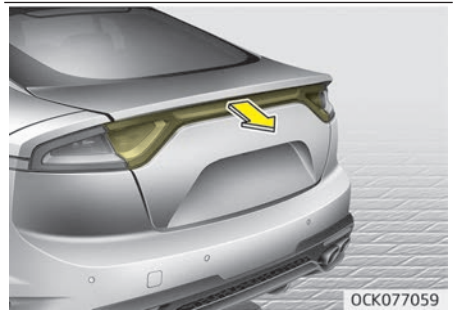

3. Remove the nuts from rear combination lamp of both side (drive side and passenger side).
4. Disconnect the connector from rear combination lamp of both side (drive side and passenger side).
5. Remove the rear combination lamp assembly from the body of the vehicle.

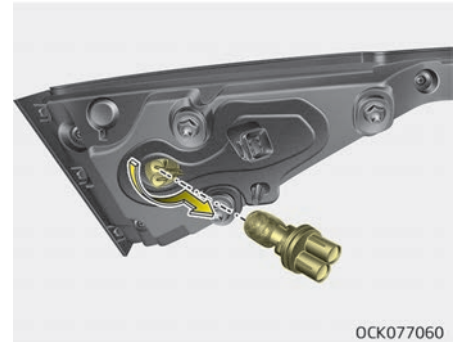

6. Remove the socket from the assembly by turning the socket counterclockwise until the tabs on the socket align with the slots on the assembly.
7. Remove the bulb from the socket by pressing it in and rotating it counterclockwise until the tabs on the bulb align with the slots in the socket. Pull the bulb out of the socket.
8. Insert a new bulb by inserting it into the socket and rotating it until it locks into place.

9. Install the socket in the assembly by aligning the tabs on the socket with the slots in the assembly. Push the socket into the assembly and turn the socket clockwise.
10. Install the rear combination lamp assembly to the body of the vehicle.
11. Install the service cover by putting it into the service hole.

High mounted stop lamp (LED type) bulb replacement

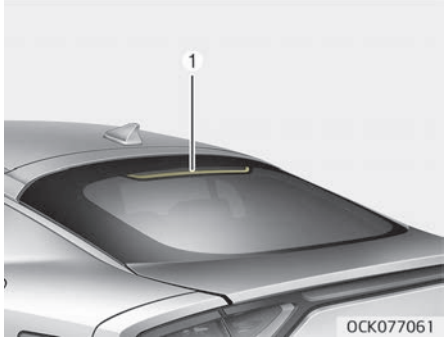

If the high mounted stop lamp (LED) (1), does not operate, have your vehicle checked by a professional workshop.

Kia recommends to visit an authorized Kia dealer/service partner.
The LED lamps cannot be replaced as a single unit because it is an integrated unit. The LED lamps has to be replaced with the unit.
A skilled technician should check or repair the high mounted stop lamp (LED), for it may damage related parts of the vehicle.

License plate lamp (LED type) bulb replacement

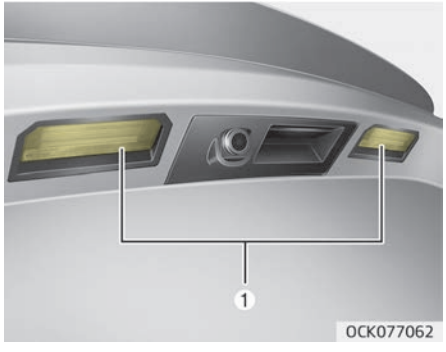

If the license plate lamp (LED) (1), does not operate, have your vehicle checked by a professional workshop.

Kia recommends to visit an authorized Kia dealer/service partner.
The LED lamps cannot be replaced as a single unit because it is an integrated unit. The LED lamps has to be replaced with the unit.
A skilled technician should check or repair the license plate lamp (LED), for it may damage related parts of the vehicle.

Side repeater lamp (LED type) bulb replacement

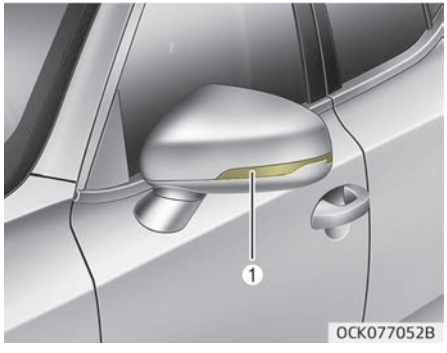

If the side repeater lamp (LED) (1), does not operate, have your vehicle checked by a professional workshop.

Kia recommends to visit an authorized Kia dealer/service partner.
The LED lamps cannot be replaced as a single unit because it is an integrated unit. The LED lamps has to be replaced with the unit.
A skilled technician should check or repair the side repeater lamp (LED), for it may damage related parts of the vehicle.

Map lamp (LED type) bulb replacement



If the map lamp (LED) (1), does not operate, have your vehicle checked by a professional workshop.

Kia recommends to visit an authorized Kia dealer/service partner.
The LED lamps cannot be replaced as a single unit because it is an integrated unit. The LED lamps has to be replaced with the unit.
A skilled technician should check or repair the map lamp (LED), for it may damage related parts of the vehicle.

Vanity mirror lamp (LED type) bulb replacement

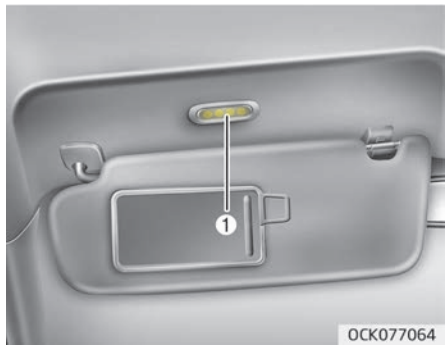

If the vanity mirror lamp (LED) (1), does not operate, have your vehicle checked by a professional workshop.
Kia recommends to visit an authorized Kia dealer/service partner.

The LED lamps cannot be replaced as a single unit because it is an integrated unit. The LED lamps has to be replaced with the unit.
A skilled technician should check or repair the vanity mirror lamp (LED), for it may damage related parts of the vehicle.

Room lamp (LED type) bulb replacement



If the room lamp (LED) (1), does not operate, have your vehicle checked by a professional workshop.
Kia recommends to visit an authorized Kia dealer/service partner.

The LED lamps cannot be replaced as a single unit because it is an integrated unit. The LED lamps has to be replaced with the unit.
A skilled technician should check or repair the room lamp (LED), for it may damage related parts of the vehicle.

Glove box lamp (LED type) bulb replacement

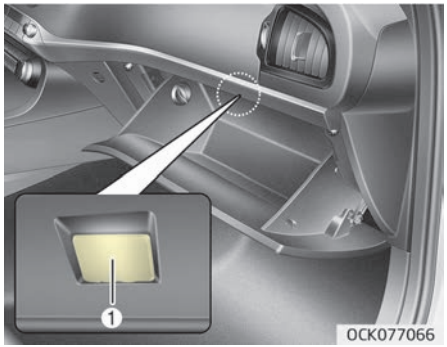

If the glove box lamp (LED) (1), does not operate, have your vehicle checked by a professional workshop.
Kia recommends to visit an authorized Kia dealer/service partner.

The LED lamps cannot be replaced as a single unit because it is an integrated unit. The LED lamps has to be replaced with the unit.
A skilled technician should check or repair the glove box lamp (LED), for it may damage related parts of the vehicle.

Luggage room lamp (LED type) bulb replacement

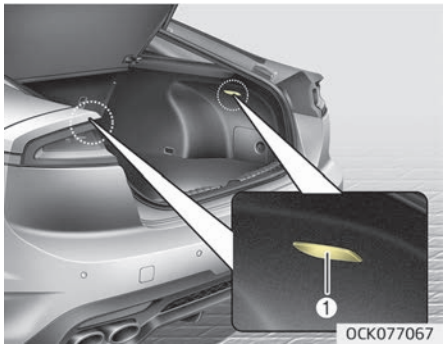

If the luggage room lamp (LED) (1), does not operate, have your vehicle checked by a professional workshop.
Kia recommends to visit an authorized Kia dealer/service partner.

The LED lamps cannot be replaced as a single unit because it is an integrated unit. The LED lamps has to be replaced with the unit.
A skilled technician should check or repair the luggage room lamp (LED), for it may damage related parts of the vehicle.

Headlamp aiming (for Europe)

Headlamp aiming

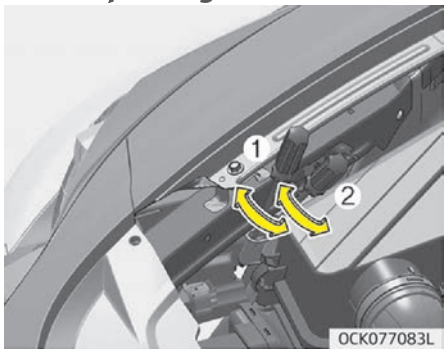

1. Inflate the tires to the specified pressure and remove any loads from the vehicle except the driver, spare tire, and tools.
2. The vehicle should be placed on a flat floor.

3. Draw vertical lines (Vertical lines passing through respective head lamp centers) and a horizontal line (Horizontal line passing through center of head lamps) on the screen.
4. With the head lamp and battery in normal condition, aim the head lamps so the brightest portion falls on the horizontal and vertical lines.
5. To aim the low and high beams left or right, turn the driver (1) clockwise or counterclockwise. To aim the low and high beams up or down, turn the driver (2) clockwise or counterclockwise.

Aiming point

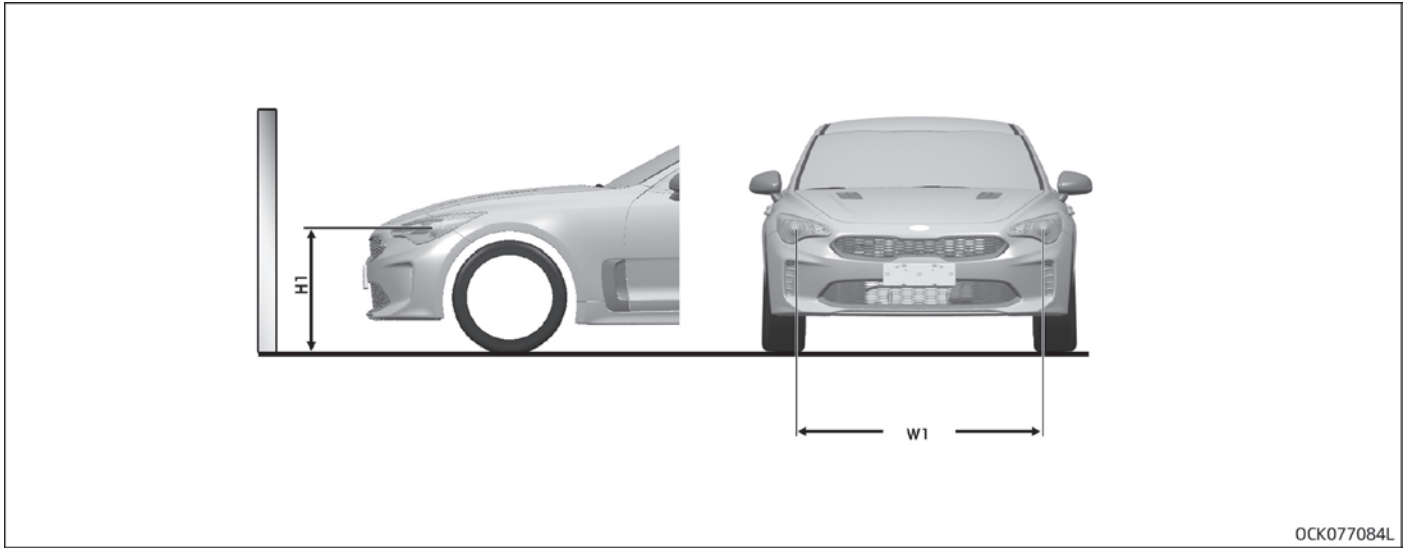

*A: Screen

Unit: mm (in)

Vehicle condition	Head lamp (Halogen type)		Head lamp (LED type)	
	Ground Height	Distance between lamps	Ground Height	Distance between lamps
	Low/High beam	Low/High beam	Low/High beam	Low/High beam
	H1	W1	H2	W2
without driver [mm (in)]	698 (27.5)	1,482 (58.3)	720 (28.3)	1,486 (58.5)
with driver [mm (in)]	693 (27.3)	1,482 (58.3)	715 (28.1)	1,486 (58.5)

Head lamp low beam (LHD)

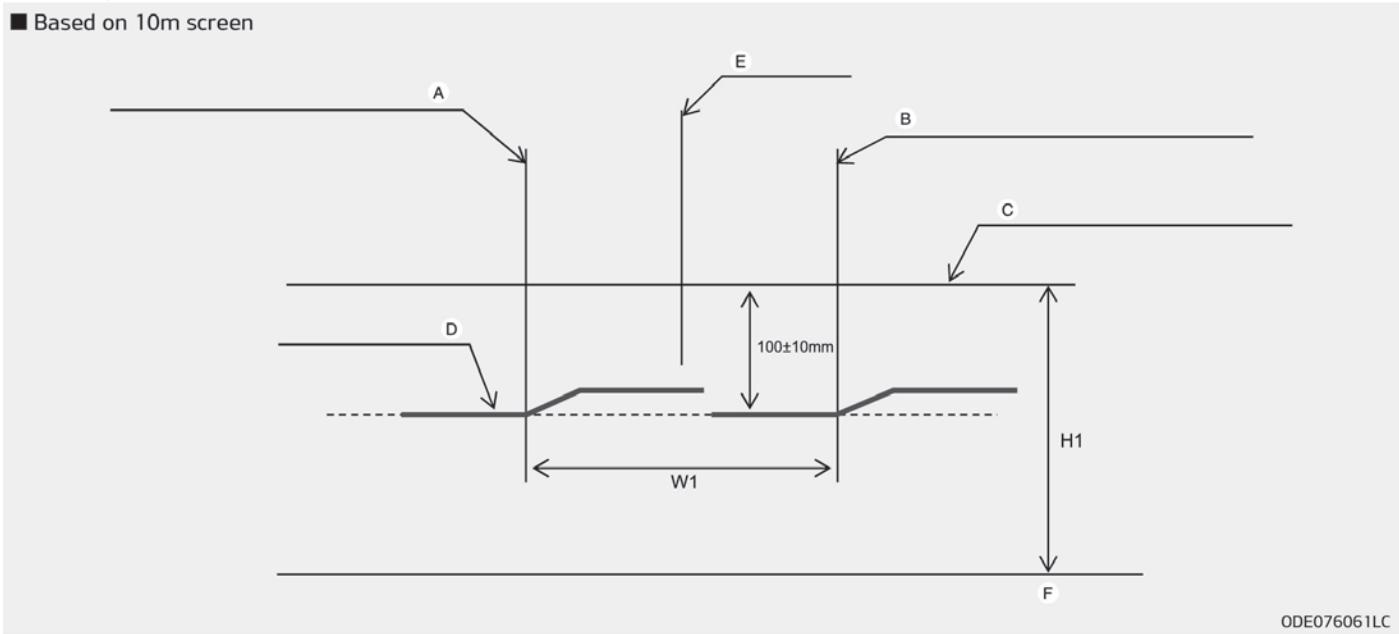

A : Vertical line of the left head (low) bulb center
B : Vertical line of the right head lamp (low) bulb center
C : Horizontal line of head lamp (low) bulb center
D : Cut – Off line
E : Car Axis
F : Ground

1. Turn the low beam on without driver aboard.

2. The cut-off line should be projected in the cut-off line shown in the picture.
3. When aiming the low beam, vertical aiming should be adjusted after adjusting the horizontal aiming.
4. If head lamp leveling device is equipped, adjust the head lamp leveling device switch with 0 positions.

Head lamp low beam (RHD)

■ Based on 10m screen

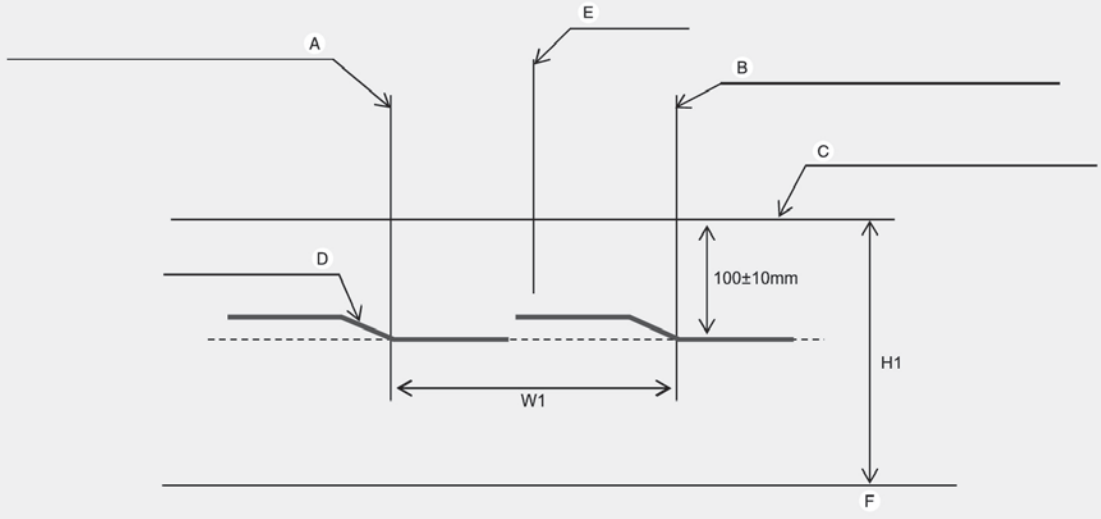

A : Vertical line of the left head (low) bulb center
B : Vertical line of the right head lamp (low) bulb center
C : Horizontal line of head lamp (low) bulb center
D : Cut – Off line
E : Car Axis
F : Ground

1. Turn the low beam on without driver aboard.

2. The cut-off line should be projected in the cut-off line shown in the picture.
3. When aiming the low beam, vertical aiming should be adjusted after adjusting the horizontal aiming.
4. If head lamp leveling device is equipped, adjust the head lamp leveling device switch with 0 positions.

APPEARANCE CARE

Exterior care

Exterior general caution

It is very important to follow the label directions when using any chemical cleaner or polish. Read all warning and caution statements that appear on the label.

Finish maintenance

Washing

To help protect your vehicle's finish from rust and deterioration, wash it thoroughly and frequently at least once a month with lukewarm or cold water.

If you use your vehicle for off-road driving, you should wash it after each off-road trip. Pay special attention to the removal of any accumulation of salt, dirt, mud, and other foreign materials. Make sure the drain holes in the lower edges of the doors and rocker panels are kept clear and clean.

Insects, tar, tree sap, bird droppings, industrial pollution and similar deposits can damage your vehicle's finish if not removed immediately.

Even prompt washing with plain water may not completely remove all these deposits. A mild soap, safe for use on painted surfaces, may be used.

After washing, rinse the vehicle thoroughly with lukewarm or cold water. Do not allow soap to dry on the finish.

⚠ CAUTION

- **Do not use strong soap, chemical detergents or hot water, and do not wash the vehicle in direct sunlight or when the body of the vehicle is warm.**
- **Be careful when washing the side windows of your vehicle.**
  Especially, with high-pressure water, water may leak through the windows and wet the interior.
- **To prevent damage to the plastic parts and lamps, do not clean with chemical solvents or strong detergents.**

⚠ WARNING

■ Wet brakes

After washing the vehicle, test the brakes while driving slowly to see if

(Continued)

(Continued)

they have been affected by water. If braking performance is impaired, dry the brakes by applying them lightly while maintaining a slow forward speed.

High-pressure washing

- When using high-pressure washers, make sure to maintain sufficient distance from the vehicle.
  Insufficient clearance or excessive pressure can lead to component damage or water penetration.
- Do not spray the camera, sensors or its surrounding area directly with a high pressure washer. Shock applied from high pressure water may cause the device to not operate normally.
- Do not bring the nozzle tip close to boots (rubber or plastic covers) or connectors as they may be damaged if they come into contact with high pressure water.



⚠ CAUTION

- **Water washing in the engine compartment including high pressure water washing may cause the failure of electrical circuits located in the engine compartment.**
- **Never allow water or other liquids to come in contact with electrical/electronic components inside the vehicle as this may damage them.**

Waxing

Wax the vehicle when water will no longer bead on the paint.

Always wash and dry the vehicle before waxing. Use a good quality liquid or paste wax, and follow the manufacturer's instructions. Wax all metal trim to protect it and to maintain its luster.

Removing oil, tar, and similar materials with a spot remover will usually strip the wax from the finish. Be sure to re-wax these areas even if the rest of the vehicle does not yet need waxing. Do not apply wax on embossed unpainted unit, as it may tarnish the unit.

⚠ CAUTION

- **Wiping dust or dirt off the body with a dry cloth will scratch the finish.**
- **Do not use steel wool, abrasive cleaners, acid detergents or strong detergents containing high alkaline or caustic agents on chrome-plated or anodized aluminum parts. This may result in damage to the protective coating and cause discoloration or paint deterioration.**

Finish damage repair

Deep scratches or stone chips in the painted surface must be repaired promptly. Exposed metal will quickly rust and may develop into a major repair expense.

✻ NOTICE

If your vehicle is damaged and requires any metal repair or replacement, be sure the body shop applies anti-corrosion materials to the parts repaired or replaced.

Bright-metal maintenance

- To remove road tar and insects, use a tar remover, not a scraper or other sharp object.
- To protect the surfaces of bright metal parts from corrosion, apply a coating of wax or chrome preservative and rub to a high luster.
- During winter weather or in coastal areas, cover the bright metal parts with a heavier coating of wax or preservative. If necessary, coat the parts with non-corrosive petroleum jelly or other protective compound.

Underbody maintenance

Corrosive materials used for ice and snow removal and dust control may collect on the underbody. If these materials are not removed, accelerated rusting can occur on underbody parts such as the fuel lines, frame, floor pan and exhaust system, even though they have been treated with rust protection. Thoroughly flush the vehicle underbody and wheel openings with lukewarm or cold water once a month, after off-road driving and at the end of each winter. Pay special attention to these areas because it is difficult to see all the mud and dirt. It will do more harm than good to wet down the road grime without removing it. The lower edges of the doors, rocker panels, and frame members have drain holes that should not clog with dirt; trapped water in these areas can cause rusting.

⚠ WARNING

After washing the vehicle, test the brakes while driving slowly to see if they have been affected by water. If braking performance is impaired, dry the brakes by applying them lightly
(Continued)

(Continued)

while maintaining a slow forward speed.

Aluminum wheel maintenance

The aluminum wheels are coated with a clear protective finish.

- Do not use any abrasive cleaner, polishing compound, solvent, or wire brushes on aluminum wheels. They may scratch or damage the finish.
- Clean the wheel when it has cooled.
- Use only a mild soap or neutral detergent, and rinse thoroughly with water. Also, be sure to clean the wheels after driving on salted roads. This helps prevent corrosion.
- Avoid washing the wheels with high-speed car wash brushes.
- Do not use any alkaline or acid detergent. It may damage and corrode the aluminum wheels coated with a clear protective finish.

Corrosion protection

Protecting your vehicle from corrosion

By using the most advanced design and construction practices to combat corrosion, we produce vehicles of the highest quality. However, this is only part of the job. To achieve the long-term corrosion resistance your vehicle can deliver, the owner's cooperation and assistance is also required.

Common causes of corrosion

The most common causes of corrosion on your vehicle are:

- Road salt, dirt and moisture that is allowed to accumulate underneath the vehicle.
- Removal of paint or protective coatings by stones, gravel, abrasion or minor scrapes and dents which leave unprotected metal exposed to corrosion.

High-corrosion areas

If you live in an area where your vehicle is regularly exposed to corrosive materials, corrosion protection is particularly important. Some of the common causes of accelerated corrosion are road salts, dust control chemicals, ocean air and industrial pollution.

Moisture breeds corrosion

Moisture creates the conditions in which corrosion is most likely to occur. For example, corrosion is accelerated by high humidity, particularly when temperatures are just above freezing. In such conditions, the corrosive material is kept in contact with the vehicle's surface by moisture that evaporate slowly.
Mud is particularly corrosive because it dries slowly and holds moisture in contact with the vehicle. Although the mud appears to be dry, it can still retain moisture and promote corrosion.
High temperatures can also accelerate corrosion of parts that are not properly ventilated so the moisture can be dispersed.
For all these reasons, it is particularly important to keep your vehicle clean and free of mud or accumulations of other materials. This applies not only to the visible surfaces but particularly to the underside of the vehicle.

To help prevent corrosion
You can help prevent corrosion from getting started by observing the following:

Keep your vehicle clean

The best way to prevent corrosion is to keep your vehicle clean and free of corrosive materials. Attention to the underside of the vehicle is particularly important.

- If you live in a high-corrosion area — where road salts are used, near the ocean, areas with industrial pollution, acid rain, etc.—, you should take extra care to prevent corrosion. In winter, hose off the underside of your vehicle at least once a month and be sure to clean the underside thoroughly when winter is over.
- When cleaning underneath the vehicle, give particular attention to the components under the fenders and other areas that are hidden from view. Do a thorough job; just dampening the accumulated mud rather than washing it away will accelerate corrosion rather than prevent it. Water under high pressure and steam are particularly effective in removing accumulated mud and corrosive materials.
- When cleaning lower door panels, rocker panels and frame members, be sure that drain holes are kept open so that moisture can escape and not be trapped inside to accelerate corrosion.

Keep your garage dry

Don't park your vehicle in a damp, poorly ventilated garage. This creates a favorable environment for corrosion. This is particularly true if you wash your vehicle in the garage or drive it into the garage when it is still wet or covered with snow, ice or mud. Even a heated garage can contribute to corrosion unless it is well ventilated so moisture is dispersed.

Keep paint and trim in good condition

Scratches or chips in the finish should be covered with "touch-up" paint as soon as possible to reduce the possibility of corrosion. If bare metal is showing through, the attention of a qualified body and paint shop is recommended.
Bird droppings: Bird droppings are highly corrosive and may damage painted surfaces in just a few hours. Always remove bird droppings as soon as possible.

Don't neglect the interior

Moisture can collect under the floor mats and carpeting and cause corrosion. Check under the mats periodically to be sure the carpeting is dry. Use particular care if you carry fertilizers, cleaning materials or chemicals in the vehicle.
These should be carried only in proper containers and any spills or leaks should be cleaned up, flushed with clean water and thoroughly dried.

Interior care

Interior general precautions

Prevent chemicals such as perfume, cosmetic oil, sun cream, hand cleaner, and air freshener from contacting the interior parts because they may cause damage or discoloration. If they do contact the interior parts, wipe them off immediately. If necessary, use a vinyl cleaner, see instructions for correct usage.

⚠ CAUTION

Never allow water or other liquids to come in contact with electrical/elec-
(Continued)

(Continued)

tronic components inside the vehicle as this may damage them.

⚠ CAUTION

When cleaning leather products (steering wheel, seats etc.), use neutral detergents or low alcohol content solutions. If you use high alcohol content solutions or acid/alkaline detergents, the color of the leather may fade or the surface may get stripped off.

Cleaning the upholstery and interior trim

Vinyl
Remove dust and loose dirt from vinyl with a whisk broom or vacuum cleaner. Clean vinyl surfaces with a vinyl cleaner.
Fabric
Remove dust and loose dirt from fabric with a whisk broom or vacuum cleaner. Clean with a mild soap solution recommended for upholstery or carpets. Remove fresh spots immediately with a fabric spot cleaner. If fresh spots do not receive immediate attention, the fabric can be stained and its color can be affected. Also, its fire-resistant properties can be reduced if the material is not properly maintained.

⚠ CAUTION

Using anything but recommended cleaners and procedures may affect the fabric's appearance and fire-resistant properties.

Cleaning the lap/shoulder belt webbing

Clean the belt webbing with any mild soap solution recommended for cleaning upholstery or carpet. Follow the instructions provided with the soap. Do not bleach or re-dye the webbing because this may weaken it.

Cleaning the interior window glass

If the interior glass surfaces of the vehicle become fogged (that is, covered with an oily, greasy or waxy film), they should be cleaned with a glass cleaner. Follow the directions on the glass cleaner container.

⚠ CAUTION

Do not scrape or scratch the inside of the rear window. This may result in damage of the rear window defroster grid.

Taking care of leather seats

- Vacuum the seat periodically to remove dust and sand on the seat.
  It will prevent abrasion or damage of the leather and maintain its quality.
- Wipe the natural leather seat cover often with dry or soft cloth.
- Sufficient use of a leather protective may prevent abrasion of the cover and helps maintain the color.
  Be sure to read the instructions and consult a specialist when using leather coating or protective agents.
- Leather with bright colors (beige, cream beige) is easily contaminated and clear in appearance. Clean the seats frequently.
- Avoid wiping with wet cloth. It may cause the surface to crack.

Cleaning the leather seats

- Remove all contaminations instantly. Refer to instructions below for removal of each contaminant.
- Cosmetic products (sunscreen, foundation, etc.)
  - Apply cleansing cream on a cloth and wipe the contaminated point.
    Wipe off the cream with a wet cloth and remove water with a dry cloth.
- Beverages(coffee, soft drink, etc.)
  - Apply a small amount of neutral detergent and wipe until contaminations do not smear.
- Oil
  - Remove oil instantly with absorbable cloth and wipe with stain remover for natural leather only.
- Chewing gum
  - Harden the gum with ice and remove gradually.

Fabric seat cover using precautions (If equipped)

Please clean the fabric seats regularly with a vacuum cleaner in consideration of fabric material characteristics. If they are heavily soiled with beverage stains, etc., use a suitable interior cleaner. To prevent damage to seat covers, wipe off the seat covers down to the seams with a large wiping motion and moderate pressure using a soft sponge or microfiber cloth. Velcro closures on clothing or sharp objects may cause snagging or scratches on the surface of the seats. Make sure not to rub such objects against the surface.

EMISSION CONTROL SYSTEM (IF EQUIPPED)

The emission control system of your vehicle is covered by a written limited warranty. Please see the warranty information contained in the Warranty & Maintenance book in your vehicle.
Your vehicle is equipped with an emission control system to meet all applicable emission regulations. There are three emission control systems, as follows.

1. Crankcase emission control system
2. Evaporative emission control system
3. Exhaust emission control system

In order to assure the proper function of the emission control systems, have your vehicle inspected and maintained by a professional workshop in accordance with the maintenance schedule in this manual. Kia recommends to visit an authorized Kia dealer/service partner.

Caution for the Inspection and Maintenance Test (With Electronic Stability Control (ESC) system)

- **To prevent the vehicle from misfiring during dynamometer testing, turn the Electronic Stability Control (ESC) system off by pressing the ESC switch.**
- **After dynamometer testing is completed, turn the ESC system back on by pressing the ESC switch again.**

1. Crankcase emission control system

The positive crankcase ventilation system is employed to prevent air pollution caused by blow-by gases being emitted from the crankcase.
This system supplies fresh filtered air to the crankcase through the air intake hose. Inside the crankcase, the fresh air mixes with blow-by gases, which then pass through the PCV valve into the induction system.

2. Evaporative emission control system

The Evaporative Emission Control System is designed to prevent fuel vapors from escaping into the atmosphere.

Canister

Fuel vapors generated inside the fuel tank are absorbed and stored in the onboard canister. When the engine is running, the fuel vapors absorbed in the canister are drawn into the surge tank through the purge control solenoid valve.

Purge Control Solenoid Valve (PCSV)

The purge control solenoid valve is controlled by the Engine Control Module (ECM); when the engine coolant temperature is low during idling, the PCSV closes so that evaporated fuel is not taken into the engine. After the engine warms up during ordinary driving, the PCSV opens to introduce evaporated fuel to the engine.

3. Exhaust emission control system

The Exhaust Emission Control System is a highly effective system which controls exhaust emissions while maintaining good vehicle performance.

Vehicle modifications

This vehicle should not be modified. Modification of your vehicle could affect its performance, safety or durability and may even violate governmental safety and emissions regulations.
In addition, damage or performance problems resulting from any modification may not be covered under warranty.

- If you use unauthorized electronic devices, it may cause the vehicle to operate abnormally, wire damage, battery discharge and fire. For your safety, do not use unauthorized electronic devices.

Engine exhaust gas precautions (carbon monoxide)

- Carbon monoxide can be present with other exhaust fumes. Therefore, if you smell exhaust fumes of any kind inside your vehicle, have it inspected and repaired immediately. If you ever suspect exhaust fumes are coming into your vehicle, drive it only with all the windows fully open. Have your vehicle checked and repaired immediately.

⚠ WARNING

■ Exhaust

Engine exhaust gases contain carbon monoxide (CO). Though colorless and odorless, it is dangerous and could be lethal if inhaled. Follow the instructions on this page to avoid CO poisoning.

- Do not operate the engine in confined or closed areas (such as garages) any more than what is necessary to move the vehicle in or out of the area.
- When the vehicle is stopped in an open area for more than a short time with the engine running, adjust the ventilation system (as needed) to draw outside air into the vehicle.
- Never sit in a parked or stopped vehicle for any extended time with the engine running.
- When the engine stalls or fails to start, excessive attempts to restart the engine may cause damage to the emission control system.

Operating precautions for catalytic converters (if equipped)

⚠ WARNING

■ Fire

(Continued)

(Continued)

- **A hot exhaust system can ignite flammable items under your vehicle. Do not park the vehicle over or near flammable objects, such as grass, vegetation, paper, leaves, etc.**
- **The exhaust system and catalytic system are very hot while the engine is running or immediately after the engine is turned off. Keep away from the exhaust system and catalytic, you may get burned. Also, do not remove the heat sink around the exhaust system, do not seal the bottom of the vehicle or do not coat the vehicle for corrosion control. It may present a fire risk under certain conditions.**

Your vehicle is equipped with a catalytic converter emission control device.
Therefore, the following precautions must be observed:

- Make sure to refuel your vehicle according to the "Fuel requirements" on page 1-03.
- Do not operate the vehicle when there are signs of engine malfunction, such as misfire or a noticeable loss of performance.

- Do not misuse or abuse the engine. Examples of misuse are coasting with the ignition off and descending steep grades in gear with the ignition off.
- Do not operate the engine at high idle speed for extended periods (5 minutes or more).
- Do not modify or tamper with any part of the engine or emission control system. All inspections and adjustments must be made by a professional workshop. Kia recommends to visit an authorized Kia dealer/service center.
- Avoid driving with an extremely low fuel level. Running out of fuel could cause the engine to misfire, damaging the catalytic converter.

Failure to observe these precautions could result in damage to the catalytic converter and to your vehicle. Additionally, such actions could void your warranties.

Gasoline Particulate Filter (GPF) (if equipped)

The Gasoline Particulate Filter (GPF) is the system that removes the soot from the exhaust gas. Unlike a disposable air filter, the GPF system automatically burns (oxidizes) and removes the accumulated soot while driving.
However, repeated short-distance driving or long-distance driving at a low speed can stop the accumulated soot from automatically being removed by the GPF system. If the accumulated soot reaches a certain amount, the GPF warning light () will illuminate. To re-operate the GPF system, the vehicle should be driven for more than 30 minutes at a speed of 80 km/h (50 mph) and faster.
Ensure the following conditions are met: safe road conditions, transmission 3 or above, and engine speed of 1,500-4,000 rpm. Driving at 80 km/h (50 mph) or faster for recommended hours will get the GPF system back to work and stop the GPF warning light.

If the GPF warning light stays on or the warning message “Check exhaust system” pops up even after driving at recommended speed and for recommended hours, visit a professional workshop and check the GPF system. Kia recommends to visit an authorized Kia dealer/service partner. Constant driving with the GPF warning light on can damage the GPF system and undermine fuel economy.

Diesel particulate filter (if equipped)

The Diesel Particulate Filter (DPF) system removes the soot in the exhaust gas.

Unlike a disposable air filter, the DPF system automatically burns (oxidizes) and removes the accumulated soot according to the driving condition. In other words, the active burning by engine control system and high exhaust gas temperature caused by normal/high driving condition burns and removes the accumulated soot. However, if the vehicle continues to be driven at repeated short distance or driven at low speed for a long time, the accumulated soot may not be automatically removed because of low exhaust gas temperature. More than a certain amount of soot deposited, the malfunction indicator light () illuminates. When the malfunction indicator light blinks, it may stop blinking by driving the vehicle at more than 60 km/h (37 mph) or at more than second gear with 1500 ~ 2500 engine rpm for a certain time (for about 25 minutes). If the malfunction indicator light () continues to be blinked or the warning massage "Check exhaust system" illuminates in spite of the procedure, visit a professional workshop and check the DPF system. Kia recommends to visit an authorized Kia dealer/service partner.

If you continue to drive with the malfunction indicator light blinking for a long time, the DPF system can be damaged and fuel consumption can be worsen.

⚠ CAUTION

■ Diesel Fuel (if equipped with DPF)

It is recommended to use the regulated automotive diesel fuel for diesel vehicle equipped with the DPF system.
If you use diesel fuel including high sulfur (more than 50 ppm sulfur) and unspecified additives, it can cause the DPF system to be damaged and white smoke can be emitted.

Lean NOx trap (if equipped)

The Lean NOx Trap (LNT) system removes the nitrogen oxide in the exhaust gas. The smell can occur in the exhaust gas depending on the quality of the fuel and it can degrade NOx reduction performance, please use the regulated automotive diesel fuel.

Selective Catalytic Reduction (if equipped)

The Selective Catalytic Reduction (SCR) system is to catalytically convert NOx to Nitrogen and Water by using the reduction agent, the urea solution.

⚠ WARNING

- **It may be a criminal offence to use a vehicle that does not consume any urea solution.**
- **Use of, and refilling of, a required urea solution of the correct specifications is mandatory for the vehicle to comply with the certificate of conformity issued for that vehicle type.**

Urea solution level gauge (if equipped)

■ Type A



OCK047191R

■ Type B



OCK077114L

The urea solution level gauge indicates the approximate amount of remaining urea solution inside the urea solution tank.

❉ The urea level gauge image pops up, whenever the engine start/stop button is in the ON position.

Low urea solution warning message (if equipped)

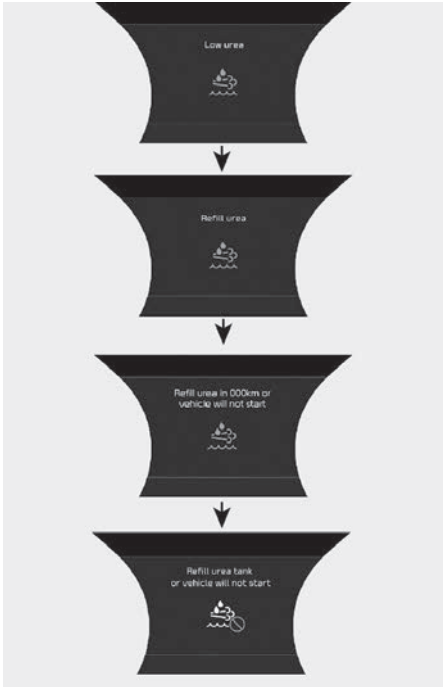

OCK077103L/OCK077104L/
OCK077105L/OCK077109L

The lack warning messages of Urea solution appear below Urea solution approximately 5.4 L. When the warning message "Low Urea" is displayed with SCR warning lamp (), the urea solution tank needs to be refilled. If not refilled for a considerable mileage, visual warning system will escalate the intensity by displaying the message "Refill Urea" with SCR warning lamp ().
In this case, the urea solution tank soon needs to be refilled.When the remaining urea solution in the urea solution tank approaches to too low level, "Refill Urea in 000 km or vehicle will not start" message is displayed with SCR warning lamp (). "xxx km(mile)" represents the remaining travel distance allowed, so do not continue driving to the limit of the remaining travel distance without refilling.
Otherwise, the vehicle can't be restarted once the engine is turned off by the engine start/stop button. Based on the driving pattern, environmental condition and road profile, the deducted remaining mileage may differ from the actual travel distance.

When "Low Urea" or "Refill Urea" message is displayed, a sufficient amount of urea solution must be added. When "Refill Urea in 000 km or vehicle will not start" message is displayed, fill sufficient amount of urea solution.
When "Refill Urea tank or vehicle will not start" message is displayed with SCR warning lamp (), the vehicle can't be restarted once the engine is turned off by the engine start/stop button. For the above cases, full replenishment is always recommended.

Malfunction with the SCR system (if equipped)

	Upon detecting a malfunction	Driving 50 km after detecting a malfunction
Urea solution system failure (= no urea solution injection)	 OCK077106L	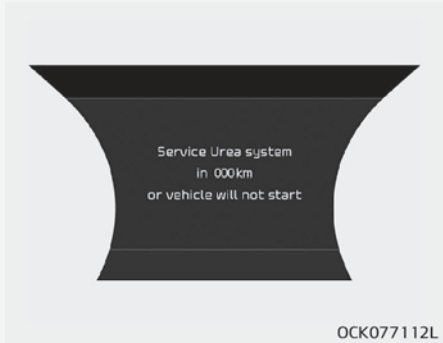 OCK077112L
Incorrect urea solution detected (= abnormal urea solution)	 OCK077107L	 OCK077110L

	Upon detecting a malfunction	Driving 50 km after detecting a malfunction
Abnormal urea-solution consumption (= post treatment failure)		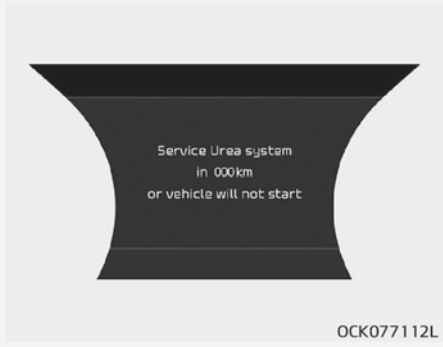

SCR system has malfunction due to disconnected electrical components, incorrect urea solution and so on.
"xxx km(mile)" represents the remaining travel distance allowed, so do not continue driving to the limit of the remaining travel distance without fixing the source of the malfunction. Otherwise, the vehicle can't be restarted once the engine is turned off by the engine start/stop button. In this case, have your vehicle inspected by a professional workshop. Kia recommends to contact an authorized Kia dealer/service partner.

Clearing the vehicle-restarting restriction (if equipped)

No restart	
Low urea solution level	
Urea solution system failure (= no ureau solution injection)	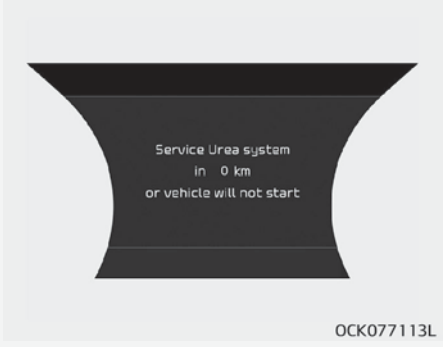

No restart	
Incorrect urea solution detected (= abnormal urea solution)	 OCK077111L
Abnormal urea-solution consumption (= post treatment failure)	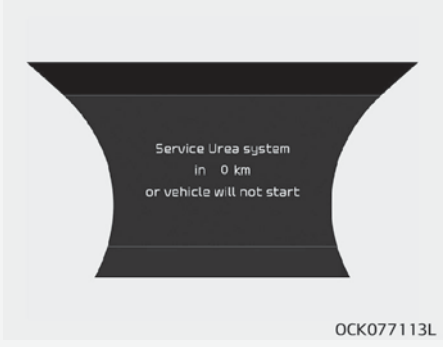 OCK077113L

Once the inducement system reached to final status and disabled the vehicle restart, it will only be deactivated in case the urea solution tank is replenished or the malfunctions have been rectified. If the vehicle can't be restarted with "Refill Urea tank or vehicle will not start" message, refill a sufficient amount of urea solution, wait until warning message disappear and try vehicle starting again. If vehicle starting is not possible regardless of urea solution level, have your vehicle inspected by a professional workshop. Kia recommends to contact an authorized Kia dealer/service partner.

Adding the urea solution



To refill the urea solution from the refill hose

1. Press the engine start/stop button to the OFF position.
2. Turn the urea solution tank cap in a counterclockwise direction to open it.
3. Fully insert the refill hose to add the ISO 22241-specified urea solution. Fill a sufficient amount of urea solution.

❈ Pay great caution not to add the urea solution into the fuel tank. If not, it surely applies adverse impact on the vehicle performance, causing various malfunctions.

❈ Never use the urea solution mixture with additives or water. It may allow foreign substances to enter the urea solution tank. If so, it surely applies adverse impact on the vehicle performance, causing various malfunctions.

❈ Use only the ISO 22241-specified urea solution. Any unauthorized urea solution surely applies adverse impacts on the vehicle performance, causing various malfunctions.

4. Turn the urea solution tank cap in a clockwise direction to securely close it.

To refill the urea solution from the refill bottle

1. Press the engine start/stop button to the OFF position.
2. Turn the urea solution tank cap in a counterclockwise direction to open it.
3. Add the ISO 22241-specified urea solution. Fill a sufficient amount of urea solution.

❈ Pay great caution not to add the urea solution into the fuel tank. If not, it surely applies adverse impact on the vehicle performance, causing various malfunctions.

❈ Pay great caution not to overfill the (completely) fulfilled urea solution tank by force while refilling the urea solution from the refill bottle. The over-filled urea solution tank will be expanded when it becomes frozen and this can cause a serious malfunction of the urea solution tank or urea solution system.

❈ Never use the urea solution mixture with additives or water. It may allow foreign substances to enter the urea solution tank. If so, it surely applies adverse impact on the vehicle performance, causing various malfunctions.

❈ Use only the ISO 22241-specified urea solution. Any unauthorized urea solution surely applies adverse impacts on the vehicle performance, causing various malfunctions.

4. Turn the urea solution tank cap in a clockwise direction to securely close it.

Adding the urea solution: Every approximately 5,600 km (The urea solution consumption is dependent on the road profile, driving pattern and environmental condition.)

❈ It takes some time to update the cluster gauges after the UREA solution injection.

⚠ WARNING

- **Do not apply any external impact on the DPF system. It may damage the catalyst, which is equipped inside the DPF system.**

(Continued)

(Continued)

- **Do not arbitrarily modify or manipulate the DPF system by redirecting or lengthen the exhaust pipe. It may adversely impact the DPF system.**
- **Avoid contact with the drained water from the exhaust pipe. The water is slightly acid and harmful to skin. If contacted, thoroughly wash it.**
- **Any arbitrary manipulation or modification of the DPF system may cause a system malfunction. The DPF system is controlled by the complex device.**
- **Wait for the DPF system to cool down before the maintenance service, as it is hot due to the heat generation. Otherwise, it may case a skin burn.**
- **Add only the specified urea solution, when your vehicle is equipped with the urea solution system.**

(Continued)

(Continued)

- **The urea solution system (i.e. urea solution nozzle, urea solution pump, and DCU) operates for approximately 2 minutes more to eliminate the remaining urea solution inside, even after the engine start/stop button is pressed to the OFF position. Before the maintenance service, make sure that the urea solution system is completely turned OFF.**
- **The poor urea solution or the unauthorized liquids may damage the vehicle components, including the DPF system. Any unverified additives in the urea solution may clog the SCR catalyst and cause other malfunctions, which require the expensive DPF system to be replaced.**
- **When the urea solution contacts with the eyes or the skin, you should thoroughly wash the contaminated skin area.**

(Continued)

(Continued)

- **When you swallow the urea solution, thoroughly rinse your mouth and drink a lot of fresh water.Then, immediately consult a doctor.**
- **When your cloth is contaminated with the urea solution, immediately change your cloth.**
- **When you have an allergic reaction to the urea solution, immediately consult a doctor.**
- **Do not allow a child to contact the urea solution.**
- **Wipe off any urea solution spillage with water or cloth. When the urea solution is crystalized, wipe it off with the sponge or the cloth, which is dampened in the cold water. When the urea solution spillage is exposed in the air for an extended period of time, it is crystalized in white, damaging the vehicle surface.**
- **The urea solution is not the fuel additives. Thus, it should not be injected to the fuel tank. Otherwise, it may damage the engine.**

(Continued)

(Continued)

- **The urea solution is the aqueous solution, which is inflammable, non-toxic, colorless and odorless.**
- **Store the urea solution tank only in the well-ventilated locations. When the urea solution is exposed to the hot temperature at approximately 50°C for an extended period of time (i.e. under the direct sunlight), the chemical decomposition may occur, emitting the ammonia vapor.**

Storing the urea solution

- It is improper to store the urea solution in the containers made with the certain materials (i.e. aluminum, copper, copper alloy, nonalloyed steel, and galvanized steel). The urea solution dissolves the metal materials, severely damaging the exhaust purification system to be non-repairable.
- Store the urea solution only in the containers made with the following materials.
  (DIN EN 10 088-1-/-2-/-3-specified CR-Ni steel, Mo-Cr-Ni steel, polypropylene, and polyethylene)

Urea solution purity

- The following situations may damage the DPF system.
  - Fuels or any unauthorized liquids are added into the urea solution tank.
  - Additives are mixed in the urea solution.
  - Water is added to dilute the urea solution.
- Use only the ISO 22241- or DIN70070-specified urea solution. When any unauthorized urea solution is added to the urea solution tank, have your vehicle inspected by a professional workshop. Kia recommends to contact an authorized Kia dealer/service partner.
- When any unauthorized impurities enter the urea solution tank, it may occur the following problems.
  - Increased emission
  - Malfunction with the DPF system
  - Engine failure

Never add the used urea solution, which is drained from the urea solution tank (i.e. while maintaining the vehicle). Its purity cannot be guaranteed. Always add the new urea solution.

Specification of the standard urea solution	Liquid such as diesel, gasoline and alcohol shall never be used for SCR system. Any fluid other than recommended urea solution (conform to ISO22241 or DIN70070) can damage SCR system hardware and deteriorate vehicle emission.

Urea system equipped vehicle will operate a cooling device to protect the system after the ignition is turned off, which may result in a slight beep during this process.

⚠ WARNING

- **When opening the urea solution tank cap at high outside temperatures, ammonia vapours may escape. Ammonia vapours have a pungent smell and primarily cause irritation of the:**
  - **Skin**
  - **Mucous membranes**
  - **Eyes**

(Continued)

(Continued)

You may experience a burning sensation in your eyes, nose and throat, as well as coughing and watering of the eyes. Do not inhale ammonia vapours. Do not allow urea solution to come in direct contact with your skin. It is hazardous to your health. Wash any affected areas off with plenty of clean water. If necessary, consult a doctor.

- **When handling with urea solution in closed space, ensure good ventilation. When the bottle of urea solution container is opened, pungent smelling fumes may escape.**
- **Keep urea solution out of reach of children.**
- **When urea solution overflows into vehicle surface, wash out vehicle surface with clean water to prohibit corrosion from occurring.**
- **When replenishing, be careful lest the urea solution should overflow.**

(Continued)

(Continued)

- **In case the vehicle was parked at very low ambient temperature (below - 11 degree Celcius) for a long time, the urea solution will be frozen in the urea solution tank. With frozen urea solution, the urea solution tank level may not be detected correctly until the urea solution will be defrosted by activated heater. Incorrect urea solution or diluted urea solution can increase the freezing point, and thus defrosting may not be properly done by the heater which is activated below certain temperatures. This phenomenon may cause malfunction of the SCR system which can lead to the prohibition of engine restarting.**
- **The time to defrost the urea solution varies in accordance with driving conditions and outside temperatures.**

⚠ CAUTION

- **If defective urea solution or liquid that is not recommended is supplied, there may be damage on the parts of the vehicle such as processing device. If defective fuel is used, foreign objects will be accumulated to SCR catalyst and cause catalyst pushed away or breaking. After adding the incorrect urea solution, please visit the closest service center as early as possible.**
- **Liquid that are not recommended such as diesel, gasoline, and alcohol shall never be used other than the recommended urea solution that satisfy ISO22241 or DIN70070.**
- **If defective urea solution or liquid that is not recommended is supplied, there may be damage on the parts of the vehicle such as processing device. If defective fuel is used, foreign objects will be accumulated to SCR catalyst and cause catalyst pushed away or breaking.**

Specifications & Consumer information

Dimensions....8-02
Engine....8-03
Gross vehicle weight....8-04
Luggage volume....8-05
Air conditioning system....8-06
Bulb wattage....8-07
Tires and wheels....8-09
Recommended lubricants and capacities....8-13
  Recommended SAE viscosity number....8-16
Vehicle identification number (VIN)....8-18
Vehicle certification label....8-19
Tire specification and pressure label....8-20
Engine number....8-21
Air conditioner compressor label....8-22
Refrigerant label....8-23
Declaration of conformity....8-24
FUEL LABEL (IF EQUIPPED)....8-25

DIMENSIONS

Item			Length (mm)
Overall length			4,830
Overall width			1,870
Overall height			1,400 (High Suspension: 1,420)
Tread	Front	225/50R17	1,592
		225/45R18	1,596
		225/40ZR19	1,596
	Rear	225/50R17	1,643
		225/45R18	1,647
		255/35ZR19	1,619
Wheelbase			2,905

ENGINE

Item	Gasoline Engine		Diesel Engine
	Lambda II PE 3.3 T-GDI Engine	Theta II 2.0 T-GDI	R2.2
Displacement [cc (cu. in)]	3,342 (203.94)	1,998 (121.9)	2,199 (134.2)
Bore x Stroke [mm (in.)]	92 x 83.8 (3.62 x 3.30)	86 x 86 (3.39 x 3.39)	85.4 x 96.0 (3.35x3.77)
Firing order	1-2-3-4-5-6	1-3-4-2	1-3-4-2
No. of cylinders	6, V-type	4. In-line	4. In-line

GROSS VEHICLE WEIGHT

kg (lbs)

ITEM		FOR EUROPE	FOR EXCEPT EUROPE	FOR AUSTRALIA
Theta II 2.0 T-GDI	2WD	2,185 (4,817)	2,170 (4,784)	2,185 (4,817)
	AWD	2,250 (4,960)	2,240 (4,938)	
Lambda II PE 3.3 T-GDI	2WD	2,260 (4,982)	2,250 (4,960)	2,280 (5,026)
	AWD	2,325 (5,125)	2,315 (5,103)	
R 2.2	2WD	2,260 (4,982)		
	AWD	2,325 (5,125)		

LUGGAGE VOLUME

ITEM	Volume
VDA	406L (14.3 cu ft)

AIR CONDITIONING SYSTEM

ITEM		Weight of volume	Classification
Refrigerant	GENERAL / EUROPE (FOR R-134a)	600 ± 25g (21.2 ± 0.9)	R-134a
	EUROPE (FOR R-1234yf)	570 ± 25g (20.1 ± 0.9)	R-1234yf
Compressor lubricant g (oz.)		100 ± 10g (3.5 ± 0.4)	FD46XG (IDEMITSU)

Please contact a professional workshop for more details.
Kia recommends to contact an authorized Kia dealer/service partner.

BULB WATTAGE

Light Bulb			Wattage (W)	Bulb type
Front	Headlamps (Low/High)		60W	HB3 HL
	Headlamps (Low/High) – LED type*		LED	LED
	Front turn signal lamps		21W	PY21W
	Front turn signal lamps - LED type*		LED	LED
	Front position lamps		LED	LED
	Daytime running light		LED	LED
	Side Repeater lamps	Bulb type	5W	WY5W
		LED type	0.5W	LED
Rear	Rear Stop/Tail lamps (outside)		LED	LED
	Rear tail lamps (Inside)		LED	LED
	Rear turn signal lamps		21W	PY21W
	Rear turn signal lamps - LED type*		LED	LED
	Back-up lamps		16W	W16W
	High mounted stop lamp*		LED	LED
	License plate lamps		LED	LED

* If equipped

Light Bulb			Wattage (W)	Bulb type
Interior	Map lamps	Bulb type	10W	FESTOON BULB
		LED type	1W	LED
	Room lamps		10W	FESTOON BULB
	Personal lamps		1W	LED
	Vanity mirror lamps		5W	FESTOON BULB
	Glove box lamp		5W	FESTOON BULB
	Trunk lamp		5W	FESTOON BULB

* If equipped

TIRES AND WHEELS

For Europe

Item	Tire size	Wheel size	Load capacity		Speed capacity		Inflation pressure [bar (psi, kPa)]				Wheel lug nut torque [Kgf·m (lbf·ft, N·m)]
							Normal load		Maximum load		
			LI *1	Kg	SS *2	Km/h	Front	Rear	Front	Rear	
Full size tire	225/50R17	7.0J x 17	94	670	W	270	2.5 (36. 250)	2.5 (36. 250)	2.6 (38, 260)	2.7 (39, 270)	11 ~ 13 (79 ~ 94, 107 ~ 127)
	225/45R18	8.0J x 18	95	690	Y	300	2.5 (36. 250)	2.7 (39. 270)	2.6 (38, 260)	2.7 (39, 270)	
	225/40R19	8.0J x 19	93	650	Y	300	2.5 (36. 250)	-	2.6 (38, 260)	-	
	255/35R19	8.5J x 19	96	710	Y	300	-	2.5 (36. 250)	-	2.7 (39, 270)	
Compact spare tire (if equipped)	T135/80R18	4.0T x 18	104	900	M	130	4.2 (60, 420)	4.2 (60, 420)	4.2 (60, 420)	4.2 (60, 420)	

*1 Load Index
*2 Speed Symbol

✻ NOTICE

- We recommend that when replacing tires, use the same originally supplied with the vehicles. If not, that affects driving performance.
- When driving in high altitude grades, it is natural for the atmospheric pressure to decrease. Therefore, please check the tire pressure and add more air when necessary. Additionally required tire air pressure per km above sea level: 1.5 psi/km

⚠ CAUTION

When replacing tires, use the same size originally supplied with the vehicle.
Using tires of a different size can damage the related parts or make it work irregularly.

Except Europe

Item	Tire size	Wheel size	Load capacity		Speed capacity		Inflation pressure [bar (psi, kPa)]				Wheel lug nut torque [Kgf·m (lbf·ft, N·m)]
							Normal load		Maximum load		
			LI *1	Kg	SS *2	Km/h	Front	Rear	Front	Rear	
Full size tire	225/45R18	8.0J x 18	95	690	Y	300	2.5 (36. 250)	2.7 (39. 270)	2.6 (38, 260)	2.7 (39, 270)	11 ~ 13 (79 ~ 94, 107 ~ 127)
	225/40R19	8.0J x 19	93	650	Y	300	2.5 (36. 250)	-	2.6 (38, 260)	-	
	255/35R19	8.5J x 19	96	710	Y	300	-	2.5 (36. 250)	-	2.7 (39, 270)	
Compact spare tire (if equipped)	T135/80R18	4.0T x 18	104	900	M	130	4.2 (60, 420)	4.2 (60, 420)	4.2 (60, 420)	4.2 (60, 420)	

*1 Load Index
*2 Speed Symbol

✻ NOTICE

- We recommend that when replacing tires, use the same originally supplied with the vehicles. If not, that affects driving performance.
- When driving in high altitude grades, it is natural for the atmospheric pressure to decrease. Therefore, please check the tire pressure and add more air when necessary. Additionally required tire air pressure per km above sea level: 1.5 psi/km

⚠ CAUTION

When replacing tires, use the same size originally supplied with the vehicle.
Using tires of a different size can damage the related parts or make it work irregularly.

RECOMMENDED LUBRICANTS AND CAPACITIES

Lubricant				Volume	Classification
Engine oil [*1] [*2] (drain and refill)	Gasoline Engine		Lambda II PE 3.3 T-GDI	6.9 l (7.29 US qt.)	ACEA A5 or above[*3]
			Theta II 2.0 T-GDI	5.7 l (6.02 US qt.)	ACEA C2 or above / 0W-30
Recommends 	Diesel Engine	R 2.2	2WD	6.3 l (6.65 US qt.)	ACEA C2 or C3
			AWD (For Europe(Except Rusia))	6.3 l (6.65 US qt.)	
			AWD (Except Europe)	6.8 l (7.18 US qt.)	
Automatic transaxle fluid	Gasoline Engine	Theta II 2.0 T-GDI		9.2 l (9.72 US qt.)	GS ATF SP-IV-RR KIA genuine ATF SP-IV-RR
		Lambda II PE 3.3 T-GDI			
	Diesel Engine	R 2.2			

[*1] Refer to “Recommended SAE viscosity number” on page 8-16
[*2] Engine oils labeled Energy Conserving Oil are now available. Along with other additional benefits, they contribute to fuel economy by reducing the amount of fuel necessary to overcome engine friction. Often, these improvements are difficult to measure in everyday driving, but in a year’s time, they can offer significant cost and energy savings.
[*3] If the ACEA A5 engine oil is not available in your country, you are able to use API service SM or above, ILSAC GF-4 or above, ACEA A3.
[*4] Regardless of oil change intervals, replace oil immediately if Rear-Differential or Front-Differential is submerged.
[*5] Be sure to inject oil for exclusive use of LSD when replacing Rear Differential (for LSD) Oil.

Lubricant			Volume	Classification
Coolant	Gasoline Engine	Theta II 2.0 T-GDI	8.8 l (9.29 US qt.)	Mixture of anti-freeze and distilled water (Ethylene glycol base coolant for aluminum radiator)
		Lambda II PE 3.3 T-GDI	11.6 l (12.25 US qt.)	
		R 2.2	11 l (11.62 US qt.)	
Brake fluid			0.395 l (0.42 US qt.)	FMVSS116 DOT 3 or DOT 4
Rear differential oil (without LSD) (Theta II 2.0 T-GDI/ R2.2) *4			1.2 l (1.26 US qt.)	HYPOID GEAR OIL API GL-5 SAE 75W/85 (SK HK SYN GEAR OIL 75W85)
Rear differential oil (without LSD) (Lambda II PE 3.3 T-GDI) *4			1.3 l (1.37 US qt.)	
Rear differential oil (with LSD) (Theta II 2.0 T-GDI/ R2.2) *4 *5			1.3 l (1.37 US qt.)	HYPOID GEAR OIL API GL-5 SAE 75W/85 (SK HK JL SYN LSD GEAR OIL 75W85 PLUS)
Rear differential oil (with LSD) (Lambda II PE 3.3 T-GDI) *4 *5			1.4 l (1.47 US qt.)	

*1 Refer to “Recommended SAE viscosity number” on page 8-16
*2 Engine oils labeled Energy Conserving Oil are now available. Along with other additional benefits, they contribute to fuel economy by reducing the amount of fuel necessary to overcome engine friction. Often, these improvements are difficult to measure in everyday driving, but in a year’s time, they can offer significant cost and energy savings.
*3 If the ACEA A5 engine oil is not available in your country, you are able to use API service SM or above, ILSAC GF-4 or above, ACEA A3.
*4 Regardless of oil change intervals, replace oil immediately if Rear-Differential or Front-Differential is submerged.
*5 Be sure to inject oil for exclusive use of LSD when replacing Rear Differential (for LSD) Oil.

Lubricant		Volume	Classification
Front differential oil *4(AWD)		0.7 l (0.74 US qt.)	HYPOID GEAR OIL API GL-5 SAE 75W/85 (SK HK SYN GEAR OIL 75W85)
Transfer oil (AWD)	Gear/ Clutch	0.57 l (0.60 US qt.)	SHELL TF 0870B
	Actuator	0.25 l (0.26 US qt.)	
Urea solution		18 L (19 US qt.)	ISO 22241 or DIN 70070
Fuel	Gasoline Engine	60 l (63.4 US qt.)	Refer to "Fuel requirements" on page 1-03
	Diesel Engine		

*1 Refer to "Recommended SAE viscosity number" on page 8-16
*2 Engine oils labeled Energy Conserving Oil are now available. Along with other additional benefits, they contribute to fuel economy by reducing the amount of fuel necessary to overcome engine friction. Often, these improvements are difficult to measure in everyday driving, but in a year's time, they can offer significant cost and energy savings.
*3 If the ACEA A5 engine oil is not available in your country, you are able to use API service SM or above, ILSAC GF-4 or above, ACEA A3.
*4 Regardless of oil change intervals, replace oil immediately if Rear-Differential or Front-Differential is submerged.
*5 Be sure to inject oil for exclusive use of LSD when replacing Rear Differential (for LSD) Oil.

Recommended SAE viscosity number

⚠ CAUTION

Always be sure to clean the area around any filler plug, drain plug, or dipstick before checking or draining any lubricant. This is especially important in dusty or sandy areas and when the vehicle is used on unpaved roads. Cleaning the plug and dipstick areas will prevent dirt and grit from entering the engine and other mechanisms that could be damaged.

Engine oil viscosity (thickness) has an effect on fuel economy and cold weather operating (engine start and engine oil flowability). Lower viscosity engine oils can provide better fuel economy and cold weather performance, however, higher viscosity engine oils are required for satisfactory lubrication in hot weather.
Using oils of any viscosity other than those recommended could result in engine damage. When choosing an oil, consider the range of temperature your vehicle will be operated in before the next oil change. Proceed to select the recommended oil viscosity from the chart.

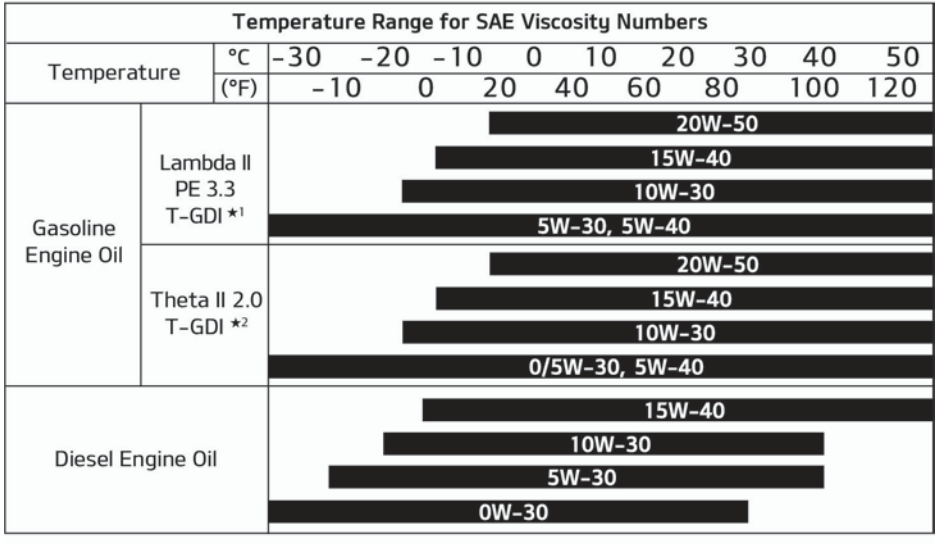

*1 : For better fuel economy, it is recommended to use the engine oil of a viscosity grade SAE 5W-30 (ACEA A5 or above). However, if the engine oil is not available in your country, select the proper engine oil using the engine oil viscosity chart.

*2 : For better fuel economy, it is recommended to use the engine oil of a viscosity grade SAE 0W-30 (ACEA C2 or above). However, if the engine oil is not available in your country, select the proper engine oil using the engine oil viscosity chart.

VEHICLE IDENTIFICATION NUMBER (VIN)

■ Frame number

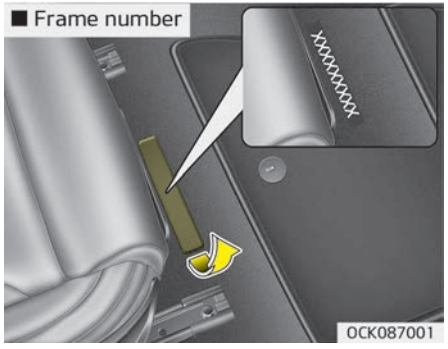

The vehicle identification number (VIN) is the number used in registering your vehicle and in all legal matters pertaining to its ownership, etc.
The number is punched on the floor under the passenger seat. To check the number, open the cover.

■ VIN label (if equipped)

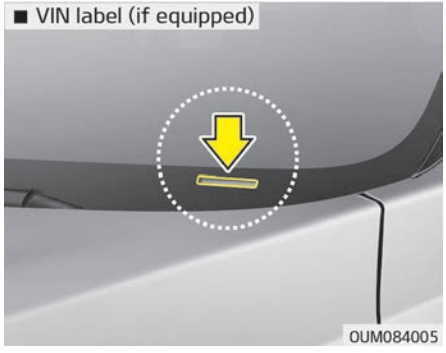

The VIN is also on a plate attached to the top of the dashboard. The number on the plate can easily be seen through the windshield from outside.

VEHICLE CERTIFICATION LABEL

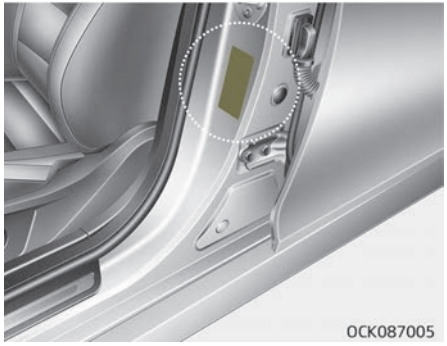

The vehicle certification label attached on the driver's (or front passenger's) side center pillar gives the vehicle identification number (VIN).

TIRE SPECIFICATION AND PRESSURE LABEL



The tires supplied on your new vehicle are chosen to provide the best performance for normal driving.
The tire label located on the driver's side center pillar gives the tire pressures recommended for your vehicle.

ENGINE NUMBER

■ Gasoline engine (THETA II 2.0L T-GDI)

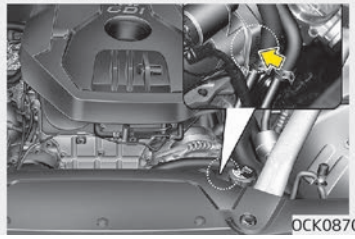

■ Gasoline engine (Lambda II PE 3.3L T-GDI)

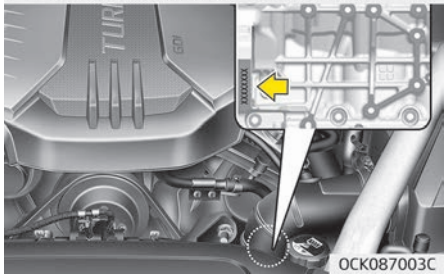

■ Diesel engine (R2.2)

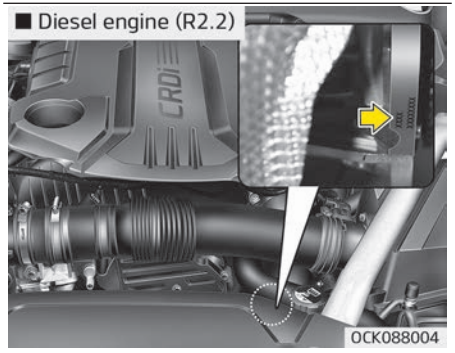

The engine number is stamped on the engine block as shown in the drawing.

AIR CONDITIONER COMPRESSOR LABEL

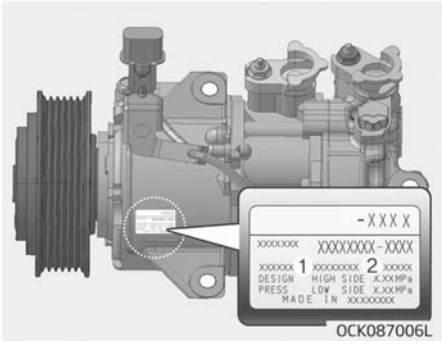

A compressor label informs you the type of compressor your vehicle is equipped with such as model, supplier part number, production number, refrigerant (1) and refrigerant oil (2).

REFRIGERANT LABEL

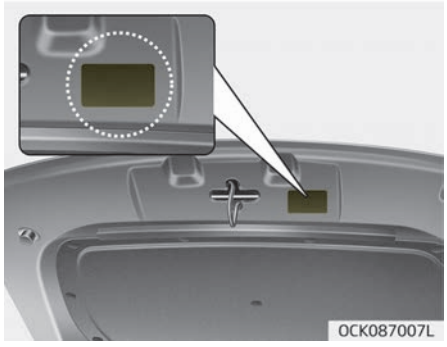

The refrigerant label is located on the underside of the hood.

DECLARATION OF CONFORMITY

■ Example

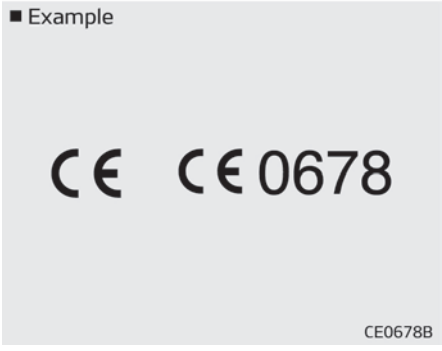

The radio frequency components of the vehicle comply with requirements and other relevant provisions of Directive 1995/5/EC.
Further information including the manufacturer's declaration of conformity is available on Kia web site as follows:
http://www.kia-hotline.com

FUEL LABEL (IF EQUIPPED)

Gasoline (Petrol) engine

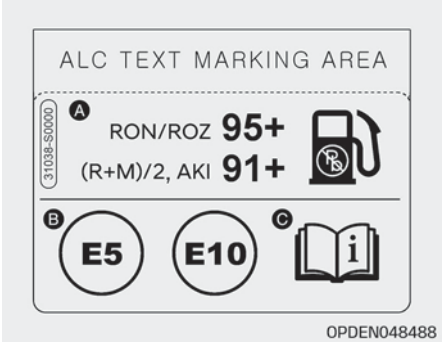

The fuel label is attached on the fuel filler door.
A. Octane rating of unleaded Gasoline (Petrol)
1. RON/ROZ: Research Octane Number
2. (R+M)/2, AKI: Anti Knock Index

B. Identifiers for Petrol-type fuels
❊ This symbol means usable fuel. Do not use any other fuel.
C. For further details, refer to "Fuel requirements" on page 1-03.

Diesel engine

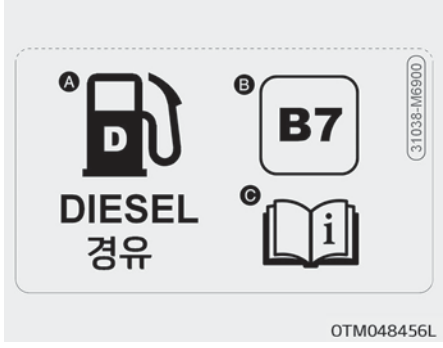

The fuel label is attached on the fuel filler door.
A. Fuel: Diesel
B. Identifiers for FAME containing Diesel-type Fuels
❊ This symbol means usable fuel. Do not use any other fuel.
C. For further details, refer to "Fuel requirements" on page 1-03

Appendix

ШОФИРАНЕ ПРЕЗ ЗИМАТА (BULGARIAN VERSION)..... 9-02
Сняг или поледица..... 9-02
Монтиране на вериги..... 9-04
VETRARAKSTUR (ICELANDIC VERSION)..... 9-05
Akstur í snjó eða hálku..... 9-05
Uppsetning á keðjum..... 9-06

ШОФИРАНЕ ПРЕЗ ЗИМАТА (BULGARIAN VERSION)

Тежките зимни атмосферни условия могат да предизвикат по-голямо износване и други проблеми. За да сведете до минимум проблемите, свързани с шофирането през зимата, следвайте препоръките по-долу:

Сняг или поледица

За да карате своето превозно средство при дълбока снежна покривка може да се наложи да използвате зимни гуми или да поставите вериги върху тях. Ако са необ ходими зимни гуми, трябва да изберете гуми със същия размер и вид като тези на оригиналните гуми.
В противен случай това може да се отрази неблагоприятно на безопасността и експлоатацията на Вашия автомобил. Освен това карането с висока скорост, бързото ускорение, внезапното натискане на спирачки и резките завои крият сериозни опасности.
При забавяне на скоростта, използвайте доколкото е възможно спирачките на дви гателя. Внезапното натискане на спирачки на заснежена или заледена настилка може да предизвика занасяне. Трябва да под държате достатъчна дистанция между автомобила, който се движи пред Вас, и Вашия автомобил.
Освен това натискайте спирачката леко. Следва да се отбележи че инсталирането на веригите върху гума та ще позволи прилагането на по-голяма движеща сила, но няма да предотврати занасянето встрани.

✻ СЪОБЩЕНИЕ

Веригите за гуми не са позволени във всички държави. Проверете норма тивната уредба в своята страна преди да поставите вериги за гуми.

Г уми за сняг

Ако поставите гуми за сняг на своя авто- мобил се уверете, че това са радиалнигуми със същия размер и товарен индекс като тези на оригиналните гуми. Поставете гуми за сняг на всичките четири колела, за да балансирате експлоатацията на своя автомобил във всякакви атмосферни условия. Имайте предвид, че тягата на гумите за сняг върху суха настилка не може да бъде толкова голяма колкото тази на оригиналните гуми. Следва да карате внимателно, дори когато пътищата са почистени. Консултирайте се с доставчика на гуми за максималната препоръчителна скорост. Консултирайте се с доставчика на гуми за максималната препоръчителна скорост.

⚠ ПРЕДУПРЕЖДЕНИЕ

■ Размер на гумите за сняг

Г умите за сняг следва да са равно- стойни по размер и тип на тези на стандартните гуми на автомобила. В противен случай това може да се

(Продължено)

(Продължено)

отрази неблагоприятно на безопасността и експлоатацията на Вашия автомобил.

Не монтирайте гуми с шипове, преди да сте проверили местните, национални и общински разпоредби за възможни ограничения в тяхната употреба.

Вериги за гуми



Страничните стени на някои радиални гуми са по-тънки от тези на други типове гуми и те могат да се повредят при монтирането на някои типове вериги за гуми върху тях. Поради това се препоръчва използване на гуми за сняг, вместо на вериги за гуми. Не поставяйте вериги за гуми на автомобили, оборудвани с алуминиеви джанти; ако това не може да се избегне, използвайте AutoSock (платнени вериги за сняг). Поставете веригите за гуми, след като прегледате инструкциите, съпътстващи веригите за гуми.

Повреди по Вашия автомобил, предизвикани от използването на неподходящи вериги, не се покриват от гаранцията на производителя на Вашия автомобил.

✻ СЪОБЩЕНИЕ

- Поставяйте AutoSock (платнени вериги за сняг) на задните гуми при автомобили със задвижване на две колела или при задвижване на четири колела. Трябва да се има предвид, че поставянето на AutoSock (платнени вериги за сняг) върху гумите, ще осигури по-голяма задвижваща сила, но няма да предотврати страничното плъзгане.
- Не поставяйте гуми с шипове преди първо да проверите за възможни ограничения за използването на такива в местните и общинските разпоредби.

⚠ ВНИМАНИЕ

При използване на AutoSock (платнени вериги за сняг):

- **Веригите с неподходящ размер или неправилно поставените вериги могат да повредят спирачните магистрали на вашия автомобил, окачването, купето и джантите.**
- **Ако чуете шум, придизвикан от контакт на веригите с купето, донатегнете веригите, за да предотвратите контакта с купето.**
- **За да предотвратите повреждането на купето, донатегнете веригите, след като изминете 0,5~1,0 километра.**

Монтиране на вериги

Когато инсталирате веригите, следвайте инструкциите на производителя и ги затегнете максимално. Карайте бавно с инсталирани вериги. Ако чуете, че веригите са навлезли в контакт с каросерията или шасито, спрете и ги затегнете. Ако те все още са в контакт, намалете скоростта до преустановяване на контакта.

Свалете веригите веднага, щом започнете да карате по почистените пътища.

⚠ ПРЕДУПРЕЖДЕНИЕ

■ Поставяне на вериги

Когато поставите вериги за сняг, паркирайте автомобила на равно място далеч от пътното движение. Включете аварийните светлини и поставете светлоотразителния триъгълник зад автомобила, ако разполагате с такъв.
Винаги паркирайте автомобила в паркинг, дръпнете ръчната спирачка и изключете двигате- ля преди да поставите веригите за сняг.

⚠ ПРЕДУПРЕЖДЕНИЕ

■ Вериги за гуми

- **Използването на вериги може да се отрази неблагоприятно на работата на Вашия автомобил.**

(Продължено)

(Продължено)

- **Не надвишавайте пределната скорост, препоръчана от производителя, или скоростта от 30 км/ч, което е пониско.**
- **Карайте внимателно и избягвайте неравности, дупки, резки завои и други опасности на пътя, които могат да накарат автомобила да подскача.**
- **Избягвайте резките завои или използването на спирачки, ако колелата са блокирани.**

⚠ ВНИМАНИЕ

- **Веригите с грешен размер или тези, които са неправилно инсталирани, могат да повредят спирачните накладки, окачването, каросерията и колелата.**
- **Спрете и затегнете веригите повторно винаги, щом ги чуете да удрят автомобила.**

VETRARAKSTUR (ICELANDIC VERSION)

Akstur í þungri færð og vetrarveðri leiðir til aukins slits á ökutækinu og skapar ýmis vandamál. Hægt er að draga úr erfiðleikum sem fylgja vetrarakstri ef farið er að þessum ráðleggingum:

Akstur í snjó eða hálku

Við akstur í djúpum snjó kann að vera nauðsynlegt að nota vetrarhjólbarða eða setja keðjur á hjólbarðana. Reynist nauðsynlegt að nota vetrarhjólbarða þarf að velja hjólbarða af sömu stærð og gerð og venjulegu hjólbarðarnir. Sé það ekki gert getur það dregið úr öryggi og skert aksturseiginleika ökutækisins.
Hraðakstur, skyndileg hröðun, nauðhemlun og krappar beygjur geta enn fremur falið í sér mikla hættu.
Þegar dregið er úr hraða er ráðlegt að beita vélarhemlun sem kostur er.
Við nauðhemlun á snævi þöktum eða hálum vegum getur ökutækið hæglega runnið til. Nauðsynlegt er að halda hæfilegri fjarlægð á milli þíns ökutækis og ökutækisins fyrir framan. Alltaf ætti að beita hemlinum mjúklega. Hafa ber í huga að ef keðjur eru settar á hjólbarða fæst aukinn drifkraftur en það hindrar þó ekki að ökutækið renni til hliðanna.

✻ TILKYNNING

Notkun snjókeðja er ólögleg í sumum ríkjum. Kynnið ykkur gildandi landslög áður en keðjur eru settar upp.

Vetrarhjólbarðar

Ef vetrarhjólbarðar eru settir á ökutækið þarf að gæta þess að nota þverofna hjól- barða af sömu stærð og ásþunga og upprunalegu hjólbarðarnir. Setjið vetrarhjólbarða á öll fjögur hjólin til að tryggja örugga stýringu ökutækisins við öll veðurskilyrði. Hafið í huga að á auðum vegi kunna vetrarhjólbarðar að hafa minna grip en hjólbarðarnir sem fylgdu ökutækinu. Því þarf að aka af gætni, jafnvel á auðum vegum. Ráðfærið ykkur við söluaðila hjólbarðanna um ráðlagðan hámarkshraða.

⚠ VIÐVÖRUN

■ Stærðir vetrarhjólbarða (framhald)

(framhald)

Vetrarhjólbarðar ættu að vera af sömu stærð og gerð og hjólbarðarnir sem fylgdu ökutækinu.
Misræmi á því getur dregið úr öryggi og skert aksturseiginleika ökutækisins.

Áður en negldir hjólbarðar eru settir upp er rétt að kynna sér reglugerðir um notkun slíkra hjólbarða í viðkomandi landi, fylki eða sveitarfélagi.

Keðjur á hjólbarða



Þar sem hliðar sumra þverbandahjólbarða eru þynnri en hliðar annarra tegunda hjólbarða kunna þeir að skemmast ef ákveðnar tegundir af keðjum eru festar á þá. Þar af leiðandi er mælt með notkun snjóhjólbarða í stað keðja. Festu ekki keðjur á ökutæki sem búin eru álfelgum; ef ekki verður hjá því komist skal nota AutoSock (snjókeðjur úr dúk). Settu keðjurnar á eftir að hafa skoðað leiðbeiningarnar sem fylgja með keðjunum.
Skemmdir á ökutækinu þínu af völdum rangrar keðjunotkunar falla ekki undir ábyrgð framleiðanda ökutækisins.

✻ TILKYNNING

- Settu AutoSock (snjókeðjur úr dúk) á afturhjólbarða ökutækja með tveggja hjóla drif eða ökutækja með aldrif. Taka ætti fram að uppsetning AutoSock (snjóðkeðjur úr dúk) á hjólbarðana veitir meiri aksturskraft en kemur ekki í veg fyrir hliðarskrik.
- Settu ekki á negldа hjólbarða án þess að athuga fyrst staðbundnar reglugerðir vegna mögulegra takmarkana á notkun þeirra.

⚠ VARÚÐ

Þegar AutoSock (snjókeðjur úr dúk) eru notaðar:
- **Röng keðjustærð eða rangt uppsettar keðjur geta skemmt hemlaleiðslur ökutækisins, fjöðrun, yfirbyggingu og hjól.**

(framhald)

(framhald)

- **Ef þú heyrir hljóð af völdum þess að keðjur snerti yfirbygginguna skaltu herða keðjurnar til að koma í veg fyrir þessa snertingu.**
- **Til að koma í veg fyrir skemmdir á yfirbyggingu skaltu herða keðjurnar aftur eftir að hafa ekið 0,5~1,0 km.**

Uppsetning á keðjum

Þegar keðjur eru settar á skal fylgja leiðbeiningum framleiðanda og herða keðjurnar eins mikið og unnt er.
Þegar keðjur hafa verið settar á skal aka hægt. Ef hljóð heyrist sem bendir til að keðjurnar séu í snertingu við yfirbyggingu eða undirvagn er rétt að nema staðar og herða keðjurnar. Ef snerting virðist enn eiga sér stað skal hægja aksturinn þar til hljóðið þagnar.
Takið keðjurnar niður um leið og komið er á rudda og snjólausa vegi.

⚠ VIÐVÖRUN

■ Uppsetning á keðjum

(framhald)

(framhald)

Þegar snjókeðjur eru settar upp skal leggja ökutækinu á sléttum fleti fjarri umferð. Kveikið á viðvörunarljósum ökutækisins og setjið þríhyrningslaga viðvörunarskilti upp fyrir aftan ökutækið, ef það er tiltækt. Hafið ökutækið ævinlega í stöðuhemli og drepið á vélinni áður en snjókeðjur eru settar upp.

⚠ VIÐVÖRUN

■ Keðjur á hjólbarða

- **Notkun keðja getur skert aksturseiginleika ökutækisins.**
- **Akið ekki hraðar en 30 km/klst. eða samkvæmt ráðlögðum hámarkshraða framleiðanda keðjanna, hvort sem reynist lægra.**
- **Akið gætilega og sneiðið hjá þústum, holum, kröppum beygjum og öðrum hættum á veginum, sem gætu valdið hristingi ökutækisins.**
- **Forðist krappar beygjur eða læsta hemlun.**

⚠ VARÚÐ

- **Séu snjókeðjur af rangri stærð eða rangt upp settar geta þær valdið skemmdum á hemlalögn, fjöðrun, yfirbyggingu og hjólum ökutækisins.**
- **Hvenær sem hljóð bendir til þess að keðjurnar sláist við ökutækið skal stöðva akstur og herða keðjurnar.**

A

Active hood system
- Active hood system....3-70

Advanced smart cruise control system
- Limitations of the system....5-93
- To adjust the sensitivity of smart cruise control..5-92
- To convert to cruise control mode....5-93
- Vehicle to vehicle distance setting....5-88

Air bag warning label....3-69

Air bag warning light....3-48

Air bags....3-44
- Air bag inflation and non-inflation conditions 3-63,3-64
- Air bag warning label....3-69
- Air bag warning light....3-48
- Driver's and passenger's front air bag....3-52
- Operation....3-45
- Passenger's front air bag ON/OFF switch....3-55
- SRS care....3-67
- SRS components and functions....3-49

Air cleaner....7-46

Air conditioner compressor label....8-22

Air conditioning system....4-122
- Automatic climate control system....4-122

Air conditioning system lubricants....8-06

Air ventilation seat....4-141

All Wheel Drive (AWD)....5-34

Anti-lock brake system (ABS)....5-50

Appearance care....7-108
- Exterior care....7-108
- Interior care....7-112

Armed stage....4-11

Ashtray....4-137

AUTO HOLD....5-47

Auto light/DBL position....4-102

Auto start - ISG....5-99

Auto stop - ISG....5-98

Automatic climate control system....4-122
- Automatic heating and air conditioning....4-123

Automatic transaxle....5-12
- Manual mode....5-15
- Shift-lock override....5-17

B

Battery....7-50

Battery replacement....4-09

Battery saver function....4-101

Before driving....5-05

Blind spot detection system (BSD).....5-113
Blind-Spot Collision Warning (BCW)
BCW (Blind-Spot Collision Warning) / LCA (Lane Change Assist).....5-114
RCCW (rear cross-traffic collision warning).....5-116
Bonnet: see "Hood".....4-33
Brake fluid.....7-42
Brake system.....5-39
Anti-lock brake system (ABS).....5-50
AUTO HOLD.....5-47
Electronic parking brake (EPB).....5-42
Electronic stability control (ESC).....5-52
Emergency Stop Signal (ESS).....5-57
Hill-start assist control (HAC).....5-57
Parking brake.....5-41
Power brakes.....5-39
Vehicle stability management (VSM).....5-56
Bulb replacement.....7-88
Bulb wattage.....8-07
Button start/stop: see "Engine start/stop button"..5-07

C

Capacities (Lubricants).....8-13
Care of seat belts.....3-30
Care
Care of seat belts.....3-30
Exterior care.....7-108
Interior care.....7-112
SRS care.....3-67
Tire care.....7-54
Center console storage.....4-135
Central door lock switch.....4-15
Chains - tire.....5-131
Checking tire inflation pressure.....7-55
Child restraint system.....3-31
Cigarette lighter.....4-137
Climate control air filter.....4-119,7-47
Climate control system
Air conditioning.....4-129
Closing the sunroof.....4-42
Coat hook.....4-146
Combined cluster: see "Instrument cluster".....4-52
Compact spare tire replacement.....7-59
Coolant.....7-39
Cooling fluid: see "Engine coolant".....7-39
Crankcase emission control system.....7-114
Cruise control system.....5-70
To set cruise control speed.....5-71
Cup holder.....4-138

D

Dashboard illumination: see "Instrument panel illumination" 4-53
Dashboard: see "Instrument cluster" 4-52
Declaration of conformity 8-24
Defogging (windshield) 4-131
Defroster (rear window) 4-116
Dimensions 8-02
Disarmed stage 4-12
Display illumination: see "Instrument panel illumination" 4-53
Displays: see "Instrument cluster" 4-52
Door lock/unlock features 4-15
Door locks 4-13
  Central door lock switch 4-15
  Door lock/unlock features 4-15
  From inside the vehicle 4-14
  From outside the vehicle 4-13
Drinks holder: see "Cup holder" 4-138
Drive mode integrated control system 5-102
  SPORT mode 5-104
Driver attention warning 5-120
Driver position memory system 3-09
Driver's and passenger's front air bag 3-52
Driving at night 5-127
Driving in flooded areas 5-128
Driving in the rain 5-128
Driving off-road 5-129

E

Eco-coasting system 5-32
Economical operation 5-124
Electric power steering 4-44
Electronic parking brake (EPB) 5-42
Electronic stability control (ESC) 5-52
Emergency fuel filler lid release 4-38
Emergency starting
  Jump starting 6-05
Emergency Stop Signal (ESS) 5-57
Emergency while driving 6-03
Emission control system 7-114
  Crankcase emission control system 7-114
  Evaporative emission control system 7-114
  Exhaust emission control system 7-114
Engine compartment 2-07, 7-04
Engine coolant 7-39

Engine coolant temperature gauge....4-56
Engine number....8-21
Engine oil....7-35
Engine overheats....6-07
Engine specification....8-03
Engine start/stop button....5-07
Engine start/stop button position....5-07
Illuminated engine start/stop button....5-07
Starting the engine....5-09
Engine start/stop button illumination....5-07
Engine will not start....6-04
Evaporative emission control system....7-114
Exhaust emission control system....7-114
Explanation of scheduled maintenance items....7-32
Exterior care....7-108
Exterior overview (Front)....2-02
Exterior overview (Rear)....2-03

F

Flat tire....6-14
Changing tires....6-15
Jack and tools....6-14
Removing the spare tire....6-15
Storing the spare tire....6-15
Floor mat anchor(s)....4-146
Fluid
Washer fluid....7-43
Fog light (rear)....4-106
Folding the outside rearview mirror....4-50
Front seat adjustment (manual)....3-06
Front seat adjustment (power)....3-06
Fuel filler lid....4-35
Emergency fuel filler lid release....4-38
Fuel filter (for diesel)....7-45
Fuel gauge....4-56
Fuel requirements....1-03
Gasoline engine....1-03
Fuse switch....7-67
Fuses....7-64
Fuse switch....7-67
Fuse/relay panel description....7-69
Instrument panel fuse....7-66
Main fuse....7-68
Multi fuse....7-68

G

Gauges....4-55
Glove box....4-135

Glove box lamp....4-114
Gross vehicle weight....8-04

H

Hazard warning flasher....6-02
Hazardous driving conditions....5-126
Head Up Display (HUD)
Head Up Display (HUD)....4-86
Headlight (Headlamp) escort function....4-101
Headlight bulb replacement....7-88
Headlight position....4-102
Headrest (front)....3-11
Headrest (rear)....3-14
Heated steering wheel....4-46
Heater
Automatic climate control system....4-123
High beam operation....4-103
Highway driving....5-129
Hill-start assist control (HAC)....5-57
Hood....4-33
Horn....4-46
How to use this manual....1-02

I

Immobilizer system....4-04
Indicator lights....4-82
Inside rearview mirror....4-48
Instrument cluster....4-52
Gauges....4-55
Indicator lights....4-82
Instrument cluster control....4-53
LCD display control....4-54
LCD Modes....4-60
Transaxle shift indicator....4-58
Trip computer....4-67
Trip modes....4-67
User settings mode....4-64
Warning lights....4-75
Warning messages....4-71
Instrument panel fuse....7-66
Instrument panel illumination....4-53
Instrument panel overview....2-05
Intelligent speed limit warning....5-78
Interior care....7-112
Interior features....4-137
Air ventilation seat....4-141
Ashtray....4-137
Cigarette lighter....4-137

Coat hook....4-146
Cup holder....4-138
Floor mat anchor(s)....4-146
Power outlet....4-142
Seat warmer....4-140
Sunvisor....4-139
USB charger....4-143,4-144
Wireless smart phone charger....4-143
Interior lamp AUTO turn off function....4-112
Interior light
Glove box lamp....4-114
Interior lamp AUTO turn off function....4-112
Map lamp....4-112
Room lamp....4-113
Vanity mirror lamp....4-114
Interior overview....2-04
ISG (Idle Stop and Go) system....5-98
Auto start....5-99
Auto stop....5-98

J

Jack and tools....6-14
Jump starting....6-05

K

Key operations....4-04
Keys
Key operations....4-04
Record your key number....4-04

L

Label
Air bag warning label....3-69
Air conditioner compressor label....8-22
Refrigerant label....8-23
Tire sidewall labeling....7-59
Tire specification and pressure label....8-20
Vehicle certification label....8-19
Lap/shoulder belt....3-21
LCD display control....4-54
LCD display
Indicator lights....4-82
LCD Modes....4-60
Trip computer....4-67
Trip modes....4-67
User settings mode....4-64
Warning lights....4-75
Warning messages....4-71

LCD Modes....4-60
Light bulbs....7-88
Rear turn signal lamp bulb replacement....7-95
Lighting....4-101
Auto light/DBL position....4-102
Battery saver function....4-101
Headlight (Headlamp) escort function....4-101
Headlight position....4-102
High beam operation....4-103
Parking light position....4-102
Rear fog light....4-106
Turn signals....4-106
Lubricants and capacities....8-13
Luggage volume....8-05

M

Main fuse....7-68
Maintenance schedule....7-11
Maintenance services....7-06
Maintenance
Explanation of scheduled maintenance items....7-32
Maintenance services....7-06
Scheduled maintenance service....7-11
Tire maintenance....7-59
Manual climate control system
Climate control air filter....4-119
Manual mode - Automatic transaxle....5-15
Map lamp....4-112
Mirrors....4-48
Folding the outside rearview mirror....4-50
Inside rearview mirror....4-48
Outside rearview mirror....4-49
Remote control....4-50
Multi fuse....7-68

O

Odometer....4-57
Oil (engine)....7-35
Outside rearview mirror....4-49
Overheats....6-07

P

Panorama sunroof
Closing the sunroof....4-42
Parking assist system
Types of warning indicator and sound....4-93
Parking brake....5-41,7-44
Parking distance warning - forward
Parking distance warning - forward....4-91

Parking distance warning - reverse
Parking distance warning - reverse..... 4-88
Types of warning sound..... 4-88
Parking light position..... 4-102
Passenger's front air bag ON/OFF switch..... 3-55
Power brakes..... 5-39
Power outlet..... 4-142
Power window lock button..... 4-31
Pre-tensioner seat belt..... 3-25
Precautions (seat belt)..... 3-28

R

Rear seat adjustment..... 3-14
Rear window defroster..... 4-116
Rearview monitor
Rearview monitor..... 4-97
Recommended cold tire inflation pressures 7-54
Recommended lubricants and capacities..... 8-13
Recommended SAE viscosity number..... 8-16
Record your key number..... 4-04
Refrigerant label..... 8-23
Remote control (outside rear view mirror)..... 4-50
Remote keyless entry system
Battery replacement..... 4-09
Transmitter precautions..... 4-08
Replacement light bulb..... 7-88
Resetting the sunroof..... 4-43
Road warning..... 6-02
Rocking the vehicle..... 5-126
Room lamp..... 4-113
Rotation (Tire)..... 7-56

S

Scheduled maintenance service..... 7-11
Seat belt restraint system..... 3-19
Seat belts..... 3-19
Care of seat belts..... 3-30
Lap/shoulder belt..... 3-21
Pre-tensioner seat belt..... 3-25
Precautions..... 3-28
Seat belt restraint system..... 3-19
Seat warmer..... 4-140
Seats..... 3-02
Driver position memory system..... 3-09
Front seat adjustment (manual)..... 3-06
Front seat adjustment (power)..... 3-06
Headrest (front)..... 3-11
Headrest (rear)..... 3-14

Rear seat adjustment....3-14
Shift-lock override - Automatic transaxle....5-17
Sliding the sunroof....4-41
Smart cruise control with stop & go system....5-82
Smart cruise control speed....5-83
Smart key
Immobilizer system....4-04
Smart key....4-04
Smooth cornering....5-127
Snow tires....5-130
Spare tire....6-14
Changing tires....6-15
Compact spare tire replacement....7-59
Removing the spare tire....6-15
Storing the spare tire....6-15
Special driving conditions....5-126
Driving at night....5-127
Driving in flooded areas....5-128
Driving in the rain....5-128
Driving off-road....5-129
Hazardous driving conditions....5-126
Highway driving....5-129
Rocking the vehicle....5-126
Smooth cornering....5-127
Speed limit control system
To set speed limit....5-75
Speed Limit Information Function (SLIF)
Display....5-79
Driver's attention....5-80
Operation....5-78
Speedometer....4-55
SPORT mode (Drive mode integrated control system)....5-104
SRS care....3-67
SRS components and functions....3-49
Starting difficulties, see engine will not start....6-04
Starting the engine - with a smart key....5-09
Steering wheel....4-44
Electric power steering....4-44
Heated steering wheel....4-46
Horn....4-46
Tilt and telescopic steering....4-45
Storage compartment....4-135
Center console storage....4-135
Glove box....4-135
Sunglass holder....4-136
Sunglass holder....4-136
Sunroof open warning....4-40
Sunroof
Resetting the sunroof....4-43
Sliding the sunroof....4-41

Sunroof open warning..... 4-40
Sunshade..... 4-40
Tilting the sunroof..... 4-41
Sunshade..... 4-40
Sunvisor..... 4-139
Surround view monitoring system..... 4-98

T

Tachometer..... 4-55
Tailgate
Tailgate..... 4-17
The eco-coasting system setting..... 5-32
The eco-coasting system
The eco-coasting system setting..... 5-32
Theft-alarm stage..... 4-11
Theft-alarm system..... 4-11
Armed stage..... 4-11
Disarmed stage..... 4-12
Theft-alarm stage..... 4-11
Tilt and telescopic steering..... 4-45
Tilting the sunroof..... 4-41
Tire care..... 7-54
Tire chains..... 5-131
Tire Mobility Kit (T.M.K)..... 6-23
Tire pressure monitoring system..... 6-08
Tire rotation..... 7-56
Tire specification and pressure label..... 8-20
Tires and wheels..... 7-54,8-09
Checking tire inflation pressure..... 7-55
Compact spare tire replacement..... 7-59
Low aspect ratio tire..... 7-62
Recommended cold tire inflation pressures..... 7-54
Tire care..... 7-54
Tire maintenance..... 7-59
Tire replacement..... 7-57
Tire rotation..... 7-56
Tire sidewall labeling..... 7-59
Tire traction..... 7-59
Wheel alignment and tire balance..... 7-57
Wheel replacement..... 7-59
Towing..... 6-31
Emergency towing..... 6-33
Removable towing hook..... 6-32
Trailer towing..... 5-134
Transaxle - Automatic transaxle..... 5-12
Transaxle shift indicator..... 4-58
Transmitter precautions..... 4-08
Trip computer..... 4-67
Trip modes..... 4-67

Turn signals....4-106

U

USB charger....4-143,4-144
User settings mode....4-64

V

Vanity mirror lamp....4-114
Vehicle break-in process....1-06
Vehicle certification label....8-19
Vehicle identification number (VIN)....8-18
Vehicle stability management (VSM)....5-56
Vehicle weight....5-143

W

Warning lights....4-75
Warning messages....4-71
Washer fluid....7-43
Welcome system....4-115
Wheel alignment and tire balance....7-57
Wheel replacement....7-59
Wide sunroof
  Wide sunroof....4-39
Windows....4-28
  Power window lock button....4-31
Windshield defrosting and defogging....4-131
Windshield washers....4-111
Windshield wipers....4-109
Winter driving....5-130
  Snow tires....5-130
  Tire chains....5-131
Wiper blades....7-48
Wipers and washers....4-109
  Windshield washers....4-111
  Windshield wipers....4-109
Wireless smart phone charger....4-143