Specifications & Consumer information

Dimensions 8-2
Power electric specifications 8-2
Gross vehicle weight 8-3
Luggage volume 8-3
Bulb wattage 8-4
Tires and wheels 8-5
Recommended lubricants and capacities 8-6
Vehicle certification label 8-7
Vehicle identification number (VIN) 8-7
Motor number 8-8
Tire specification and pressure label 8-8
Air conditioner compressor label 8-8
Refrigerant label 8-9
Declaration of conformity 8-9

DIMENSIONS

Item	mm (in)	
Overall length	4,140 (162.9)	
Overall width	1,800 (70.9)	
Overall height	1,593(62.7)	
Front tread	205/60R16	1,576 (62.1)
Rear tread	205/60R16	1,585(62.4)
Wheelbase	2,570 (101.2)	

POWER ELECTRIC SPECIFICATIONS

MOTOR		Max. Output (KW)	81.4
		Max. Torque (Nm)	285
EPCU	INVERTER	Input Voltage	240~413
	LDC	Max. Output (KW)	1.7
CHARGER (OBC)		Max. Output (KW)	6.6

GROSS VEHICLE WEIGHT

Item	
Gross vehicle weight kg (lbs.)	1,960(4,321)

LUGGAGE VOLUME

Item	
Luggage volume(VDA) *l* (cu ft)	281(9.9)*1 / 891(31.5) *2

*1 Back seat upright with luggage under tray
*2 Back seat folded with luggage under tray

BULB WATTAGE

Light Bulb		Wattage	Bulb type
Front	Headlamps (High)	55	H7LL
	Headlamps (Low)	55	H7LL
	Front turn signal lamps	LED	LED
	Front position lamps	LED	LED
	Front fog lamps*	55	9006
	Side Repeater lamps (Outside Mirror)	LED	LED
Rear	Rear Tail and stop lamps	LED	LED
	Rear Tail lamps	LED	LED
	Rear turn signal lamps	27	PY27W
	Back-up lamps	16	W16W
	High mounted stop lamps	LED	LED
	License plate lamps	5	W5W
Interior	Map lamps	8 (LED*)	FESTOON (LED*)
	Room lamps	8 (LED*)	FESTOON (LED*)
	Personal lamps*	LED*	LED*
	Vanity mirror lamps	5	FESTOON
	Glove box lamps	5	FESTOON
	Luggage lamp	8 (LED*)	FESTOON (LED*)

*: If equipped

TIRES AND WHEELS

Item	Tire size	Wheel size	Load Capacity		Speed capacity		Inflation pressure bar(psi, kPa)				Wheel lug nut torque Kgf·m (lbf·ft, N·m)
							Normal load		Maximum load		
			LI *1	Kg	SS *2	Km/h	Front	Rear	Front	Rear	
Full size tire	205/60R16	6.5J×16	92	630	H	210	2.3 (33, 230)	2.3 (33, 230)	2.6 (38, 260)	2.6 (38, 260)	9~11 (65~79, 88~107)

*1 : Load Index

*2 : Speed Symbol

⚠ CAUTION

When replacing tires, use the same size originally supplied with the vehicle.
Using tires of a different size can damage the related parts or make it work irregularly.

✻ NOTICE

- **We recommend that when replacing tires, use the same originally supplied with the vehicles. If not, that affects driving performance.**
- **When driving in high altitude grades, it is natural for the atmospheric pressure to decrease. Therefore, please check the tire pressure and add more air when necessary. Additionally required tire air pressure per km above sea level: 1.5psi/km**

RECOMMENDED LUBRICANTS AND CAPACITIES

To help achieve proper performance, durability, use only lubricants of the proper quality for your vehicle.
These lubricants and fluids are recommended for use in your vehicle.

Lubricant		Volume	Classification
Reduction gear oil		1.3 ± 0.1 *l*	75W/85, GL-4
Coolant	with Heat pump	4.1 *l* ~ 4.2 *l* (4.3 ~ 4.4 US qt.)	Mixture of antifreeze and water (Ethylene glycol base coolant for aluminum radiator)
	without Heat pump	4.6 *l* ~ 4.7 *l* (4.9 ~ 5.0 US qt.)	
Brake fluid			FMVSS116 DOT-3 or DOT-4

VEHICLE IDENTIFICATION NUMBER (VIN)

■ Frame number

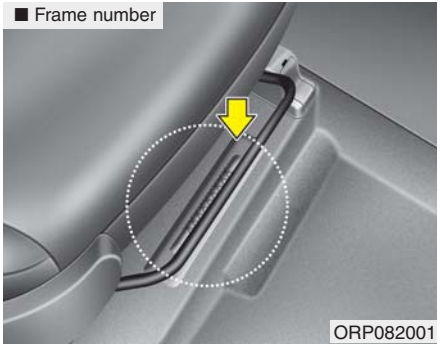

The vehicle identification number (VIN) is the number used in registering your vehicle and in all legal matters pertaining to its ownership, etc.

The number is punched on the floor under the passenger seat. To check the number, open the cover.

■ VIN label (if equipped)

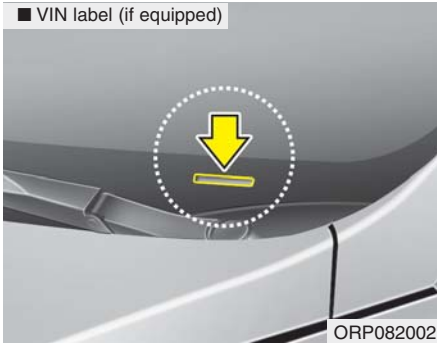

The VIN is also on a plate attached to the top of the dashboard. The number on the plate can easily be seen through the windshield from outside.

VEHICLE CERTIFICATION LABEL

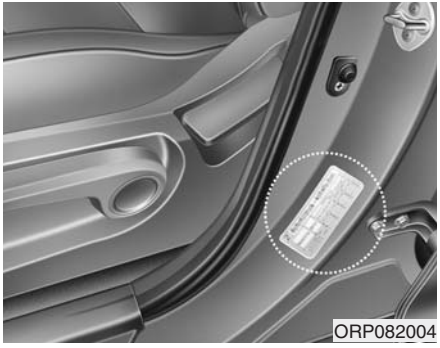

The vehicle certification label attached on the driver's (or front passenger's) side center pillar gives the vehicle identification number (VIN).

TIRE SPECIFICATION AND PRESSURE LABEL

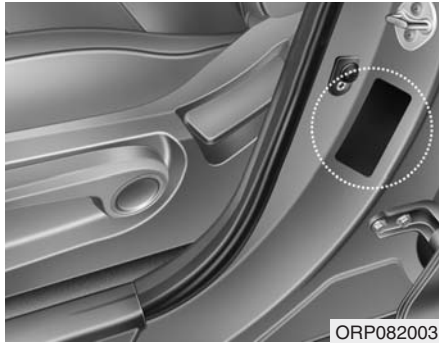
ORP082003

The tires supplied on your new vehicle are chosen to provide the best performance for normal driving.

The tire label located on the driver's side center pillar gives the tire pressures recommended for your vehicle.

MOTOR NUMBER

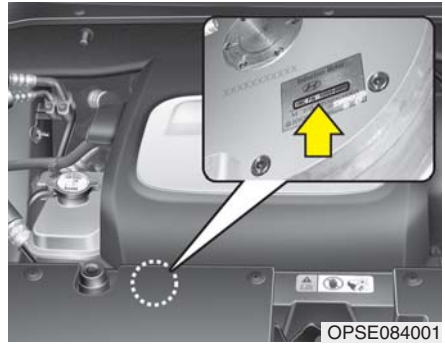
OPSE084001

The motor number is stamped on the motor compartment as shown in the drawing.

AIR CONDITIONER COMPRESSOR LABEL

■ Type A

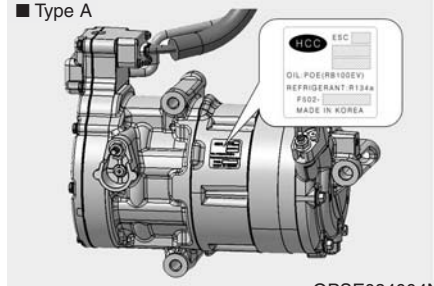

OPSE084004N

■ Type B

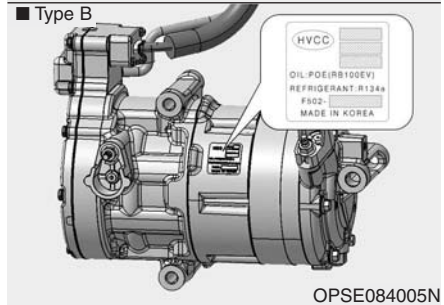

OPSE084005N

A compressor label informs you the type of compressor your vehicle is equipped with such as model, supplier part number, production number, refrigerant and refrigerant oil.

REFRIGERANT LABEL

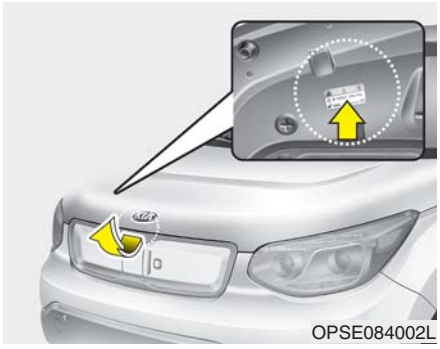

The refrigerant label is located on the underside of the hood.

DECLARATION OF CONFORMITY

CE 0678

CE0678

The radio frequency components of the vehicle comply with requirements and other relevant provisions of Directive 1995/5/EC.

Further information including the manufacturer's declaration of conformity is available on Kia web site as follows;

http://www.kia-hotline.com