Specifications & Consumer information

Dimensions 9-2
Engine 9-3
Gross vehicle weight 9-4
Air conditioning system 9-5
Luggage volume 9-5
Bulb wattage 9-6
Tires and wheels 9-7
Recommended lubricants and capacities 9-8
• Recommended sae viscosity number 9-10
Vehicle certification label 9-11
Vehicle identification number (VIN) 9-11
Engine number 9-12
Tire specification and pressure label 9-12
Declaration of conformity 9-13
Refrigerant label 9-13
Air conditioner compressor label 9-13

DIMENSIONS

Item			5 seater
Overall length			4,480 mm
Overall width			1,855 mm
Overall height	Without Roof rack		1,645 mm
	With Roof rack		1,655 mm
Tread	Front	225/60R17	1,613 mm
		225/55R18	1,613 mm
		245/45R19	1,609 mm
	Rear	225/60R17	1,625 mm
		225/55R18	1,625 mm
		245/45R19	1,620 mm
Wheelbase			2,670 mm

ENGINE

Item	Gasoline		Diesel
	2.0 MPI	2.4 GDI	2.0 TCI
Displacement [cc]	1999	2359	1995
Bore x Stroke [mm]	81.0x97.0	88.0x97.0	84.0x90.0
Firing order	1-3-4-2	1-3-4-2	1-3-4-2
No. of cylinders	4 In-line, DOHC	4 In-line, DOHC	4 In-line, DOHC

GROSS VEHICLE WEIGHT

For except Europe

Item	Gasoline Engine					Diesel Engine			
	2.0 MPI				2.4 GDI	2.0 TCI			
	2WD		AWD		AWD	2WD		AWD	
	M/T	A/T	M/T	A/T	A/T	M/T	A/T	M/T	A/T
GVW (lbs)	2,010 kg (4431)	2,020 kg (4453)	2,080 kg (4585)	2,100 kg (4629)	2,140 kg (4717)	2,140 kg (4717)	2,170 kg (4784)	2,200 kg (4850)	2,230 kg (4916)

For Europe

Item	Gasoline Engine					Diesel Engine			
	2.0 MPI				2.4 GDI	2.0 TCI			
	2WD		AWD		AWD	2WD		AWD	
	M/T	A/T	M/T	A/T	A/T	M/T	A/T	M/T	A/T
GVW (lbs)	2,030 kg (4475)	2,040 kg (4497)	2,100 kg (4629)	2,120 kg (4673)	2,160 kg (4761)	2,150 kg (4739)	2,190 kg (4828)	2,240 kg (4938)	2,250 kg (4960)

LUGGAGE VOLUME

Item		Volume
VDA	MIN.	466L
	MAX.	1,455L

Min : Behind rear seat to upper edge of the seat back.
Max : Behind front seat to roof.

AIR CONDITIONING SYSTEM

Item	Weight of volume	Classification
Refrigerant	550±25	1234yf
	550±25	R-134a
Compressor lubricant	120±10	PAG30

We recommend that you contact an authorized Kia dealer for more details.

BULB WATTAGE

Light Bulb			Wattage (W)	Bulb type
Front	Headlamps (Low)		60	HB3
	Headlamps (Low) - HID type*		35	D3S
	Headlamps (High)		60	HB3
	Front turn signal lamps		21	PY21W
	Front position lamps	Bulb type	5	P21/5W
		LED type	LED	LED
	Daytime running light	Bulb type	21	P21/5W
		LED type	LED	LED
	Front fog lamps	Bulb type	51	HB4
	Side Repeater lamps	Bulb type	5	WY5W
Rear	Rear Stop/Tail lamps (outside)	Bulb type	21/5	P21/5W
	Rear tail lamps (Inside)		5	P21/5W
	Rear fog lamps (Inside)		21	P21W
	Rear Stop/Tail lamps (outside)	LED type	LED	LED
	Rear tail lamps (Inside)		LED	LED
	Rear fog lamps (Inside)	Bulb type	21	P21W
	Rear turn signal lamps		21	PY21W
	Back-up lamps		21	P21W
	High mounted stop lamp*		LED	LED
	License plate lamps		5	W5W
Interior	Map lamps		10(LED)	W10W(LED)
	Room lamps		10	FESTOON
	Vanity mirror lamps		5	FESTOON
	Tailgate lamp		10(LED)	FESTOON(LED)

* If equipped

TIRES AND WHEELS

Item	Tire size	Wheel size	Load Capacity		Speed capacity		Inflation pressure [bar(psi, kPa)]				Wheel lug nut torque Kgf·m (lb·ft, N·m)
							Normal load		Maximum load		
			LI *1	Kg	SS *2	Km/h	Front	Rear	Front	Rear	
Full size tire	225/60R17	7.0JX17	99	775	H	210	240 (35)	240 (35)	240 (35)	240 (35)	11~13 (79~94, 107~127)
	225/55R18	7.0JX18	98	750	H	210	240 (35)	240 (35)	240 (35)	240 (35)	
	245/45R19	7.5JX19	98	750	H	210	240 (35)	240 (35)	240 (35)	240 (35)	
	245/45R19	7.5JX19	98	750	W	270	240 (35)	240 (35)	240 (35)	240 (35)	
Compact spare tire	T135/90D17	4TX17	103	875	M	130	420 (60)	420 (60)	420 (60)	420 (60)	
	T135/90D17	4TX17	104	900	M	130	420 (60)	420 (60)	420 (60)	420 (60)	

*1 : Load Index

*2 : Speed Symbol

✻ NOTICE

We recommend that when replacing tires, use the same originally supplied with the vehicles. If not, that affects driving performance.

⚠ CAUTION

When replacing tires, use the same size originally supplied with the vehicle.
Using tires of a different size can damage the related parts or make it work irregularly.

RECOMMENDED LUBRICANTS AND CAPACITIES

To help achieve proper engine and powertrain performance and durability, use only lubricants of the proper quality. The correct lubricants also help promote engine efficiency that results in improved fuel economy.
These lubricants and fluids are recommended for use in your vehicle.

<table>
<tr><th colspan="3">Lubricant</th><th>Volume</th><th>Classification</th></tr>
<tr><td rowspan="5">Engine oil *2
(drain and refill)
Recommends
Shell HELIX Motor oils</td><td rowspan="4">Gasoline Engine</td><td rowspan="3">2.0 MPI</td><td rowspan="3">4.0 L</td><td>Australia, Africa, General Export, Russia, Asia-Pacific
API SM, ILSAC GF-4 or above / 5W-20 (B) *1
ACEA A5 or above / 5W-30 (B) *1</td></tr>
<tr><td>Middle East, India, Libia, Algeria, Morocco, Tunisia, Sudan, Egypt, Iran
ACEA A5 or above / 5W-30 (C) *1</td></tr>
<tr><td>Europe API SM, ILSAC GF-4 or above / 5W-20 (D) *1
ACEA A5 or above / 5W-30 (D) *1</td></tr>
<tr><td>2.4 GDI</td><td>4.8 L</td><td>ACEA A5 or above (C) *1</td></tr>
<tr><td>Diesel Engine</td><td>2.0 TCI</td><td>7.6 L</td><td>With DPF *3 : ACEA C2 or C3
Without DPF *3 : ACEA B4</td></tr>
<tr><td rowspan="2">Manual transaxle fluid</td><td>Gasoline Engine</td><td>2.0 MPI</td><td>2WD: 1.7 ~ 1.8 L,
AWD: 1.6 ~ 1.7 L</td><td rowspan="2">- SAE 70W, API GL-4
• The list of transaxle fluid approved by KIA: SK HK MTF 70W, SHELL SPIRAX S6 GHME 70W MTF, GS CALTEX GS MTF HD 70W</td></tr>
<tr><td>Diesel Engine</td><td>2.0 TCI</td><td>1.8 ~ 1.9 L</td></tr>
<tr><td rowspan="3">Automatic transaxle fluid</td><td rowspan="2">Gasoline Engine</td><td>2.0 MPI</td><td>2WD: 7.3 L,
AWD: 7.1 L</td><td rowspan="3">- ATF SP-IV
• The list of transaxle fluid approved by KIA: SK ATF SP-IV, MICHANG ATF SP-IV</td></tr>
<tr><td>2.4 GDI</td><td>6.7 L</td></tr>
<tr><td>Diesel Engine</td><td>2.0 TCI</td><td>7.8L</td></tr>
</table>

Lubricant			Volume	Classification
Coolant	Gasoline Engine	2.0 MPI	AT : 6.9 L MT : 7.1 L	Mixture of antifreeze and distilled water (Ethylene glycol base coolant for aluminum radiator)
		2.4 GDI	7.1 L	
	Diesel Engine	2.0 TCI	AT : 8.5 L MT : 8.7 L	
Brake / clutch fluid			370±20cc	FMVSS116 DOT 3 or DOT 4
Rear differential oil (AWD)			0.58 ± 0.05 L (0.61 ± 0.05 US qt)	Hypoid gear GL-5 OIL 75W/90 (SHELL HD AXLE OIL 75W/90 or equivalent)
Transfer case oil (AWD)	Gasoline Engine	2.0 MPI	0.35 ± 0.017 L (0.36 ± 0.018 US qt)	Hypoid gear GL-5 OIL 75W/90 (SHELL HD AXLE OIL 75W/90 or equivalent)
		2.4 GDI		
	Diesel Engine	2.0 TCI		
Fuel	Gasoline Engine		62 L	Refer to Fuel requirements in section 1
	Diesel Engine			

*1 : Refer to the recommended SAE viscosity numbers on the next page.

*2 : Engine oils labeled Energy Conserving Oil are now available. Along with other additional benefits, they contribute to fuel economy by reducing the amount of fuel necessary to overcome engine friction. Often, these improvements are difficult to measure in everyday driving, but in a year's time, they can offer significant cost and energy savings.

*3 : Diesel Particulate Filter

Recommended SAE viscosity number

⚠ CAUTION

Always be sure to clean the area around any filler plug, drain plug, or dipstick before checking or draining any lubricant. This is especially important in dusty or sandy areas and when the vehicle is used on unpaved roads. Cleaning the plug and dipstick areas will prevent dirt and grit from entering the engine and other mechanisms that could be damaged.

Engine oil viscosity (thickness) has an effect on fuel economy and cold weather operating (engine start and engine oil flowability). Lower viscosity engine oils can provide better fuel economy and cold weather performance, however, higher viscosity engine oils are required for satisfactory lubrication in hot weather.

Using oils of any viscosity other than those recommended could result in engine damage. When choosing an oil, consider the range of temperature your vehicle will be operated in before the next oil change. Proceed to select the recommended oil viscosity from the chart.

Temperature Range for SAE Viscosity Numbers

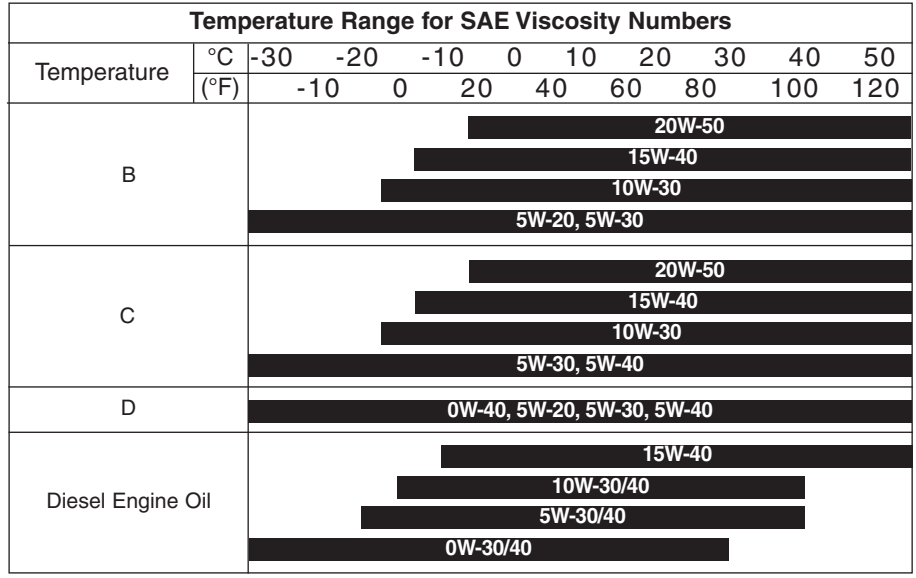

VEHICLE IDENTIFICATION NUMBER (VIN)

■ Frame number

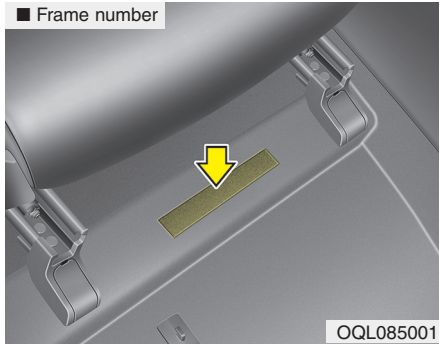

The vehicle identification number (VIN) is the number used in registering your vehicle and in all legal matters pertaining to its ownership, etc.

The number is punched on the floor under the passenger seat. To check the number, open the cover.

■ VIN label (if equipped)

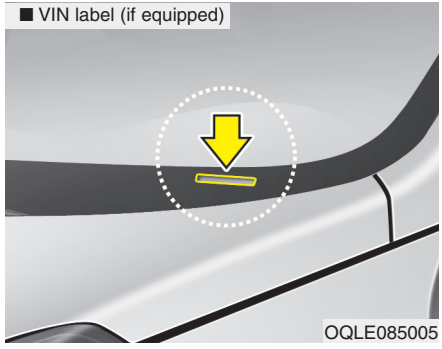

The VIN is also on a plate attached to the top of the dashboard. The number on the plate can easily be seen through the windshield from outside.

VEHICLE CERTIFICATION LABEL

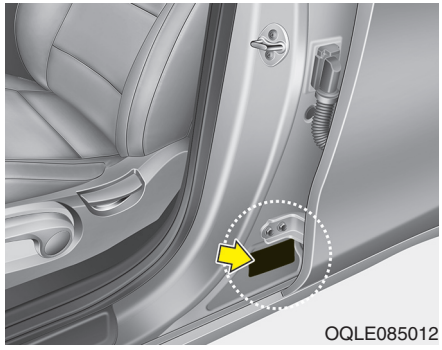

The vehicle certification label attached on the driver's (or front passenger's) side center pillar gives the vehicle identification number (VIN).

TIRE SPECIFICATION AND PRESSURE LABEL

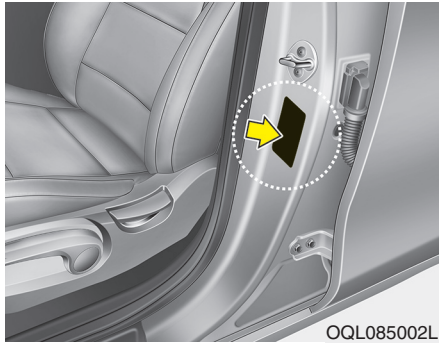

The tires supplied on your new vehicle are chosen to provide the best performance for normal driving.

The tire label located on the driver's side center pillar gives the tire pressures recommended for your vehicle.

ENGINE NUMBER

■ Theta 2.4 GDI

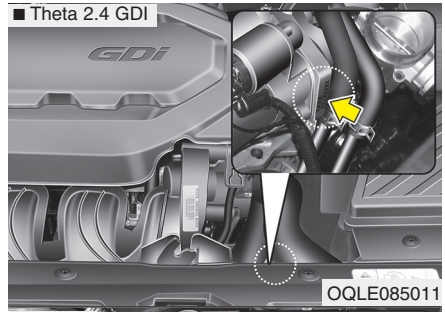

■ Nu 2.0

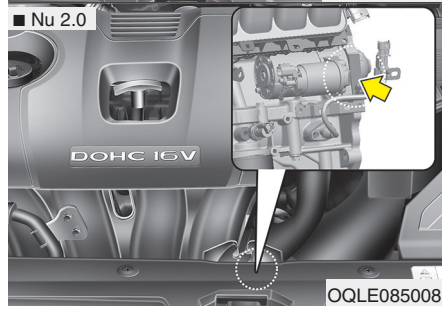

■ Diesel R2.0

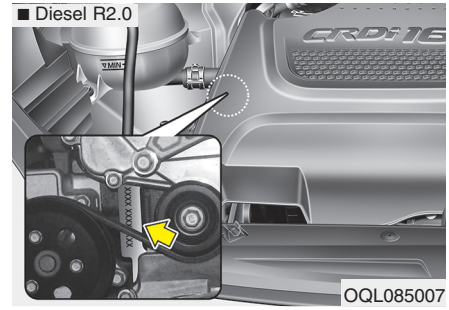

The engine number is stamped on the engine block as shown in the drawing.

AIR CONDITIONER COMPRESSOR LABEL

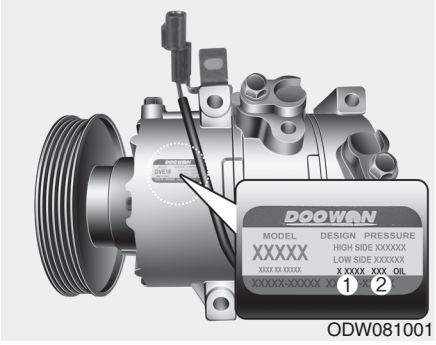

ODW081001

A compressor label informs you the type of compressor your vehicle is equipped with such as model, supplier part number, production number, refrigerant (1) and refrigerant oil (2).

REFRIGERANT LABEL

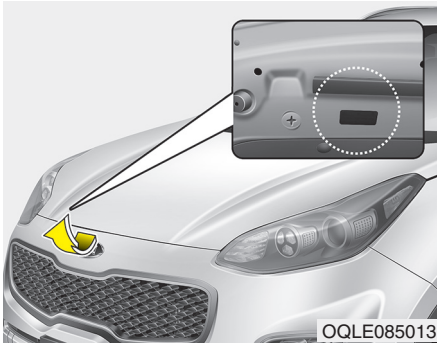
OQLE085013

The refrigerant label is located on the underside of the hood.

DECLARATION OF CONFORMITY

■ Example

CE 0678

CE0678

The radio frequency components of the vehicle comply with requirements and other relevant provisions of Directive 1995/5/EC.

Further information including the manufacturer's declaration of conformity is available on Kia web site as follows;

http://www.kia-hotline.com