OWNER'S MANUAL



KIA

The Power to Surprise

SPORTAGE

Kia, THE COMPANY

Thank you for becoming the owner of a new Kia vehicle.

As a global car manufacturer focused on building high-quality, value for money prices, Kia Motors is dedicated to providing you with a customer service experience that exceeds your expectations.

At all of our Kia dealerships you will be treated with warmth, hospitality and professionalism by people who care based on our **"Family-like Care"** promise.

All information contained in this Owner's Manual was accurate at the time of publication. However, Kia reserves the right to make changes at any time so that our policy of continual product improvement can be carried out.

This manual applies to all trims of this vehicle and includes images, descriptions, and explanations of optional as well as standard equipment. As a result, some material in this manual may not be applicable to your specific Kia vehicle. Some images are shown for illustration only and may show features that differ from those on your vehicle.

Enjoy your vehicle and Kia's "Family-like Care" experience!

Thank you for choosing a Kia vehicle.

This manual will familiarize you with operational, maintenance and safety information about your new vehicle. It is supplemented by a Warranty and Maintenance book that provides important information on all warranties regarding your vehicle. Kia urges you to read these publications carefully and follow the recommendations to help assure an enjoyable and safe operation of your new vehicle.

Kia offers a great variety of options, components and features for its various models. Therefore, some of the equipment described in this manual, along with the various illustrations, may not be applicable to your particular vehicle.

The information and specifications provided in this manual were accurate at the time of printing. Kia reserves the right to discontinue or change specifications or design at any time without notice and without incurring any obligation. If you have questions, Kia recommends to check with an authorized Kia dealer/service partner.

Kia assures you of our continuing interest in your motoring pleasure and satisfaction in your Kia vehicle.

© 2018 Kia MOTORS Corp.

All rights reserved. Reproduction by any means, electronic or mechanical, including photocopying, recording, or by any information storage and retrieval system or translation in whole or part is not permitted without written authorization from Kia MOTORS Corporation.

Printed in Korea

Table of contents

Introduction	1
Your vehicle at a glance	2
Safety features of your vehicle	3
Features of your vehicle	4
Audio system	5
Driving your vehicle	6
What to do in an emergency	7
Maintenance	8
Specifications & Consumer information	9
Alphabetical index	I

Introduction

1

How to use this manual..... 1-02
Fuel requirements..... 1-03
  Gasoline engine..... 1-03
  Diesel engine..... 1-05
Vehicle handling instructions..... 1-06
Vehicle break-in process..... 1-07

HOW TO USE THIS MANUAL

We want to help you get the greatest possible driving pleasure from your vehicle. Your Owner's Manual can assist you in many ways. We strongly recommend that you read the entire manual. In order to minimize the chance of death or injury, you must read the WARNING and CAUTION sections in the manual.

Illustrations complement the words in this manual to best explain how to enjoy your vehicle. By reading your manual, you learn about features, important safety information, and driving tips under various road conditions.

The general layout of the manual is provided in the Table of Contents. Use the index when looking for a specific area or subject; it has an alphabetical listing of all information in your manual.

Chapters: This manual has nine chapters plus an index. Each chapter begins with a brief list of contents so you can tell at a glance if that chapter has the information you want.

You will find various WARNINGs, CAUTIONs, and NOTICEs in this manual. These WARNINGs were prepared to enhance your personal safety. You should carefully read and follow ALL procedures and recommendations provided in these WARNINGs, CAUTIONs and NOTICEs.

⚠ WARNING

A WARNING indicates a situation in which harm, serious bodily injury or death could result if the warning is ignored.

⚠ CAUTION

A CAUTION indicates a situation in which damage to your vehicle could result if the caution is ignored.

✻ NOTICE

A NOTICE indicates interesting or helpful information is being provided.

FUEL REQUIREMENTS

Gasoline engine

Unleaded

For Europe

For the optimal vehicle performance, we recommend you to use unleaded gasoline with an octane rating of RON (Research Octane Number) 95 / AKI (Antiknock Index) 91 or higher.
You may use unleaded gasoline with an octane rating of RON 91~94 / AKI 87~90 but it may result in slight performance reduction of the vehicle. (Do not use methanol blended fuels.)

Except Europe

Your new Kia vehicle is designed to use only unleaded fuel having an Octane Rating of RON (Research Octane Number) 91 / AKI (Antiknock Index) 87 or higher. (Do not use methanol blended fuels.)
Your new vehicle is designed to obtain maximum performance with UNLEADED FUEL, as well as minimize exhaust emissions and spark plug fouling.

⚠ CAUTION

NEVER USE LEADED FUEL. The use of leaded fuel is detrimental to the catalytic converter and will damage the engine control system's oxygen sensor and affect emission control. Never add any fuel system cleaning agents to the fuel tank other than what has been specified. (Kia recommends to consult an authorized Kia dealer/service partner for details.)

⚠ WARNING

- **Do not "top off" after the nozzle automatically shuts off when refueling.**
- **Always check that the fuel cap is installed securely to prevent fuel spillage in the event of an accident.**

Leaded (if equipped)

For some countries, your vehicle is designed to use leaded gasoline. When you are going to use leaded gasoline, Kia recommends to visit an authorized Kia dealer/service partner and ask whether leaded gasoline in your vehicle is available or not.
Octane Rating of leaded gasoline is same with unleaded one.

Gasoline containing alcohol and methanol

Gasohol, a mixture of gasoline and ethanol (also known as grain alcohol), and gasoline or gasohol containing methanol (also known as wood alcohol) are being marketed along with or instead of leaded or unleaded gasoline.
Do not use gasohol containing more than 10% ethanol, and do not use gasoline or gasohol containing any methanol. Either of these fuels may cause drivability problems and damage to the fuel system, engine control system and emission control system.
Discontinue using gasohol of any kind if drivability problems occur.
Vehicle damage or drivability problems may not be covered by the manufacturer's warranty if they result from the use of:

1. Gasohol containing more than 10% ethanol.
2. Gasoline or gasohol containing methanol.
3. Leaded fuel or leaded gasohol.

⚠ CAUTION

Never use gasohol which contains methanol. Discontinue use of any gasohol product which impairs drivability.

Other fuels

Using fuels such as
- Silicone (Si) contained fuel,
- MMT (Manganese, Mn) contained fuel,
- Ferrocene (Fe) contained fuel, and
- Other metalic additives contained fuels,

may cause vehicle and engine damage or cause plugging, misfiring, poor acceleration, engine stalling, catalyst melting, abnormal corrosion, life cycle reduction, etc.
Also, the Malfunction Indicator Lamp (MIL) may illuminate.

✻ NOTICE

Damage to the fuel system or performance problem caused by the use of these fuels may not be covered by your New Vehicle Limited Warranty.

Use of MTBE

Kia recommends avoiding fuels containing MTBE (Methyl Tertiary Butyl Ether) over 15.0% vol. (Oxygen Content 2.7% weight) in your vehicle.
Fuel containing MTBE over 15.0% vol. (Oxygen Content 2.7% weight) may reduce vehicle performance and produce vapor lock or hard starting.

⚠ CAUTION

Your New Vehicle Limited Warranty may not cover damage to the fuel system and any performance problems that are caused by the use of fuels containing methanol or fuels containing MTBE (Methyl Tertiary Butyl Ether) over 15.0% vol. (Oxygen Content 2.7% weight.)

Do not use methanol

Fuels containing methanol (wood alcohol) should not be used in your vehicle. This type of fuel can reduce vehicle performance and damage components of the fuel system, engine control system and emission control system.

Fuel additives

Kia recommends that you use unleaded gasoline which has an octane rating of RON (Research Octane Number) 95 / AKI (Antiknock Index) 91 or higher (for Europe) or Octane Rating of RON (Research Octane Number) 91 / AKI (Antiknock Index) 87 or higher (except Europe).
For customers who do not use good quality gasolines including fuel additives regularly, and have problems starting or the engine does not run smoothly, one bottle of additives added to the fuel tank at every 15,000 km (For Europe) / 10,000 km (Except Europe). Additives are available from a professional workshop along with information on how to use them. Kia recommends to visit an authorized Kia dealer/service partner.

Operation in foreign countries

If you are going to drive your vehicle in another country, be sure to:

- Observe all regulations regarding registration and insurance.
- Determine that acceptable fuel is available.

Diesel engine

Diesel fuel

Diesel engine must be operated only on commercially available diesel fuel that complies with EN 590 or comparable standard. (EN stands for "European Norm"). Do not use marine diesel fuel, heating oils, or non-approved fuel additives, as this will increase wear and cause damage to the engine and fuel system. The use of non-approved fuels and / or fuel additives will result in a limitation of your warranty rights.
Diesel fuel of above cetane 51 is used in your vehicle. If two types of diesel fuel are available, use summer or winter fuel properly according to the following temperature conditions.

- Above -5 °C (23 °F) ... Summer type diesel fuel.
- Below -5 °C (23 °F) ... Winter type diesel fuel.

Watch the fuel level in the tank very carefully: if the engine stops through fuel failure, the circuits must be completely purged to restart.

⚠ CAUTION

Do not let any gasoline or water enter the tank. This would make it necessary to drain it out and to bleed the lines to avoid jamming the injection pump and damaging the engine.

⚠ CAUTION

■ Diesel Fuel (if equipped with DPF)

It is recommended to use the regulated automotive diesel fuel for diesel vehicle equipped with the DPF system.
If you use diesel fuel including high sulfur (more than 50 ppm sulfur) and unspecified additives, it can cause the DPF system to be damaged and white smoke can be emitted.

Biodiesel

Commercially supplied Diesel blends of no more than 7% biodiesel, commonly known as "B7 Diesel" may be used in your vehicle if Biodiesel meets EN 14214 or equivalent specifications. (EN stands for "European Norm".) The use of biofuels exceeding 7% made from rapeseed methyl ester (RME), fatty acid methyl ester (FAME), vegetable oil methyl ester (VME) etc. or mixing diesel exceeding 7% with biodiesel will cause increased wear or damage to the engine and fuel system. Repair or replacement of worn or damaged components due to the use of non approved fuels will not be covered by the manufactures warranty.

⚠ CAUTION

- **Never use any fuel, whether diesel or B7 biodiesel or otherwise, that fails to meet the latest petroleum industry specification.**
- **Never use any fuel additives or treatments that are not recommended or approved by the vehicle manufacturer.**

VEHICLE HANDLING INSTRUCTIONS

As with other vehicles of this type, failure to operate this vehicle correctly may result in loss of control, an accident or vehicle rollover.
Specific design characteristics (higher ground clearance, track, etc.) give this vehicle a higher center of gravity than other types of vehicles. In other words they are not designed for cornering at the same speeds as conventional 2-wheel drive vehicles. Avoid sharp turns or abrupt maneuvers. Again, failure to operate this vehicle correctly may result in loss of control, an accident or vehicle rollover. **Be sure to read the "Reducing the risk of a rollover" on page 6-37.**

VEHICLE BREAK-IN PROCESS

No special break-in period is needed. By following a few simple precautions for the first 1,000 km (600 miles) you may add to the performance, economy and life of your vehicle.

- Do not race the engine.
- While driving, keep your engine speed (rpm, or revolutions per minute) within 3,000 rpm.
- Do not maintain a single speed for long periods of time, either fast or slow. Varying engine speed is needed to properly break-in the engine.
- Avoid hard stops, except in emergencies, to allow the brakes to seat properly.
- Don't tow a trailer during the first 2,000 km (1,200 miles) of operation.

Your vehicle at a glance

Exterior overview..... 2-02
Interior overview..... 2-04
Instrument panel overview..... 2-05
Engine compartment..... 2-07

EXTERIOR OVERVIEW

■ Front view



❋ The actual shape may differ from the illustration.

OQL018001LB

1. Hood..... p. 4-35
2. Head lamp (Features of your vehicle)..... p. 4-83
Head lamp (Maintenance)..... p. 8-79
3. Front fog lamp (Features of your vehicle)..... p. 4-101
Front fog lamp (Maintenance)..... p. 8-83
4. Wheel and tire..... p. 8-48, 9-09
5. Outside rearview mirror..... p. 4-50
6. Panorama sunroof ..... p. 4-40
7. Front windshield wiper blades (Features of your vehicle)..... p. 4-108
Front windshield wiper blades (Maintenance)..... p. 8-40
8. Windows..... p. 4-30
9. Parking distance warning-forward..... p. 4-89

■ Rear view

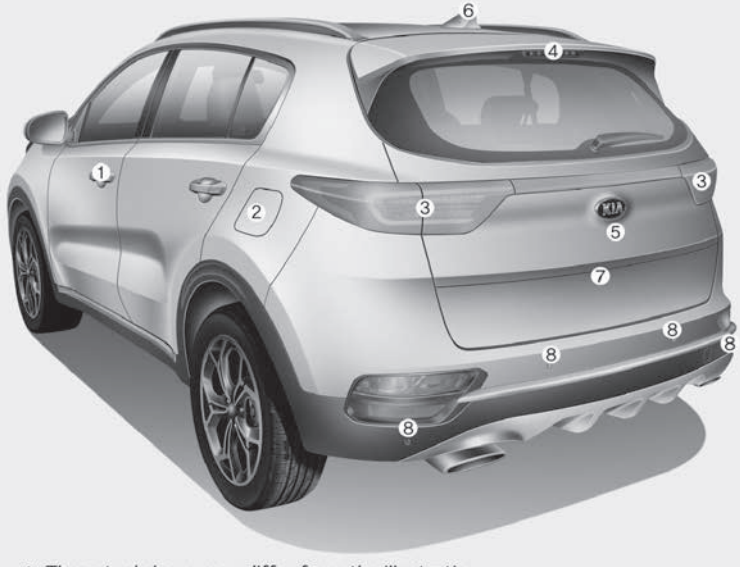

❋ The actual shape may differ from the illustration.

OQL018002LB

1. Door locks..... p. 4-15
2. Fuel filler lid..... p. 4-37
3. Rear combination lamp (Maintenance)..... p. 8-79
4. High mounted stop lamp (Maintenance)..... p. 8-86
5. Tailgate..... p. 4-19
6. Antenna..... p. 5-02
7. Rearview monitor..... p. 4-95
8. Parking distance warning-reverse..... p. 4-89

INTERIOR OVERVIEW



* The actual shape may differ from the illustration.

OQL018005LB

1. Inside door handle..... p. 4-16
2. Power window switch..... p. 4-30
3. Central door lock switch..... p. 4-17
4. Power window lock button..... p. 4-33
5. Outside rearview mirror control..... p. 4-50
6. Outside rearview mirror folding..... p. 4-50
7. Headlight leveling device..... p. 4-102
8. Instrument panel illumination control..... p. 4-54
9. BCW On/Off button..... p. 6-123
10. LKA On/Off button..... p. 6-112
11. Power tailgate open/close button..... p. 4-20
12. Steering wheel..... p. 4-45
13. Tilt and telescopic steering control lever..... p. 4-46
14. Inner fuse panel..... p. 8-60
15. Brake pedal..... p. 6-39
16. Parking brake pedal..... p. 6-40
17. Hood release lever..... p. 4-35
18. Seat..... p. 3-02

INSTRUMENT PANEL OVERVIEW



* The actual shape may differ from the illustration.

OQL018004LC

1. Steering wheel audio controls ..... p. 5-10
2. Driver's front air bag ..... p. 3-49
3. Horn ..... p. 4-47
4. Instrument cluster ..... p. 4-53
5. Wiper and washer control lever ..... p. 4-106
6. Ignition switch ..... p. 6-08
   Engine start/stop button ..... p. 6-13
7. Cruise control ..... p. 6-86
   Manual Speed Limit Assist ..... p. 6-91
   Smart cruise control system with stop & go system ..... p. 6-94
8. Audio ..... p. 5-02
9. Hazard warning flasher ..... p. 7-02
10. Manual climate control system ..... p. 4-119
    Automatic climate control system ..... p. 4-125
11. Shift lever M/T ..... p. 6-19
    Shift lever A/T ..... p. 6-23
12. Seat warmer ..... p. 4-145
    Air ventilation seat ..... p. 4-147
13. Heated steering wheel button ..... p. 4-47
14. Smart phone wireless charger ..... p. 4-149
15. Drive mode button ..... p. 6-110
16. AWD Lock button ..... p. 6-30



* The actual shape may differ from the illustration.

OQL018004LB

17. DBC button..... p. 6-82
18. Electronic parking brake (EPB) switch..... p. 6-42
19. Auto Hold On/Off button..... p. 6-48
20. Parking distance warning On/Off button..... p. 4-89
21. Center console storage box..... p. 4-140
22. USB charger..... p. 4-149
23. Power outlet..... p. 4-147
24. Glove box..... p. 4-140
25. Passenger's front air bag..... p. 3-49

ENGINE COMPARTMENT

■ Gasoline Engine (Nu 2.0L - MPI)



■ Gasoline Engine (Theta II 2.4L - GDI)

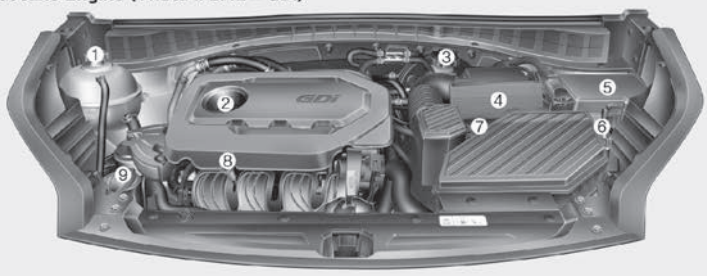

✻ The actual engine room in the vehicle may differ from the illustration.

OQLE075094/OQLE075095

1. Engine coolant reservoir ..... p. 8-30
2. Engine oil filler cap ..... p. 8-27
3. Brake/clutch fluid reservoir ..... p. 8-33
4. Air cleaner ..... p. 8-37
5. Fuse box ..... p. 8-58
6. Negative battery terminal ..... p. 8-44
7. Positive battery terminal ..... p. 8-44
8. Engine oil dipstick ..... p. 8-26
9. Windshield washer fluid reservoir ..... p. 8-34

■ Diesel Engine (R 2.0L)

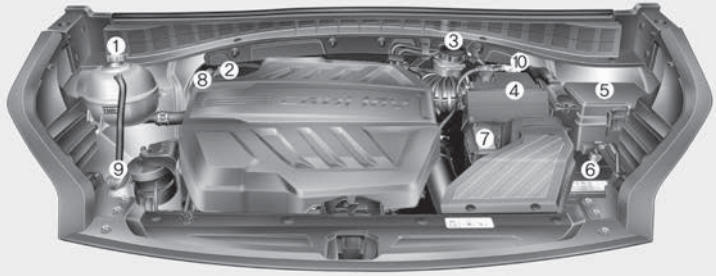

* The actual engine room in the vehicle may differ from the illustration.

OQL078001L

1. Engine coolant reservoir..... p. 8-30
2. Engine oil filler cap..... p. 8-27, 8-75
3. Brake/clutch fluid reservoir..... p. 8-33
4. Air cleaner..... p. 8-37
5. Fuse box..... p. 8-58
6. Negative battery terminal..... p. 8-44
7. Positive battery terminal..... p. 8-44
8. Engine oil (Diesel)..... p. 8-28
9. Windshield washer fluid reservoir..... p. 8-34
10. Fuel filter cartridge..... p. 8-36

Safety features of your vehicle

Seats....3-02
Feature of seat leather....3-04
Front seat adjustment - manual....3-05
Front seat adjustment - power....3-07
Headrest (for front seat)....3-09
Seatback pocket....3-11
Rear seat....3-12
Headrest....3-14
Seat belts....3-16
Seat belt restraint system....3-16
Pre-tensioner seat belt....3-25
Seat belt precautions....3-28
Care of seat belts....3-30
Child restraint system (CRS)....3-31
Selecting a Child Restraint System (CRS)....3-31
Installing a Child Restraint System (CRS)....3-33
ISOFIX anchorage and top-tether anchorage (ISOFIX anchorage system) for children....3-34
Child seat restraint suitability for seat position using the seat belt....3-40
Air bag - Supplemental restraint system....3-42
How does the air bag system operate....3-43
Air bag warning light....3-46
SRS components and functions....3-46
Driver's and passenger's front air bag....3-49
Side air bag....3-52
Curtain air bag....3-53
SRS Care....3-61
Additional safety precautions....3-61
Adding equipment to or modifying your air bag-equipped vehicle....3-62
Air bag warning label....3-63

SEATS

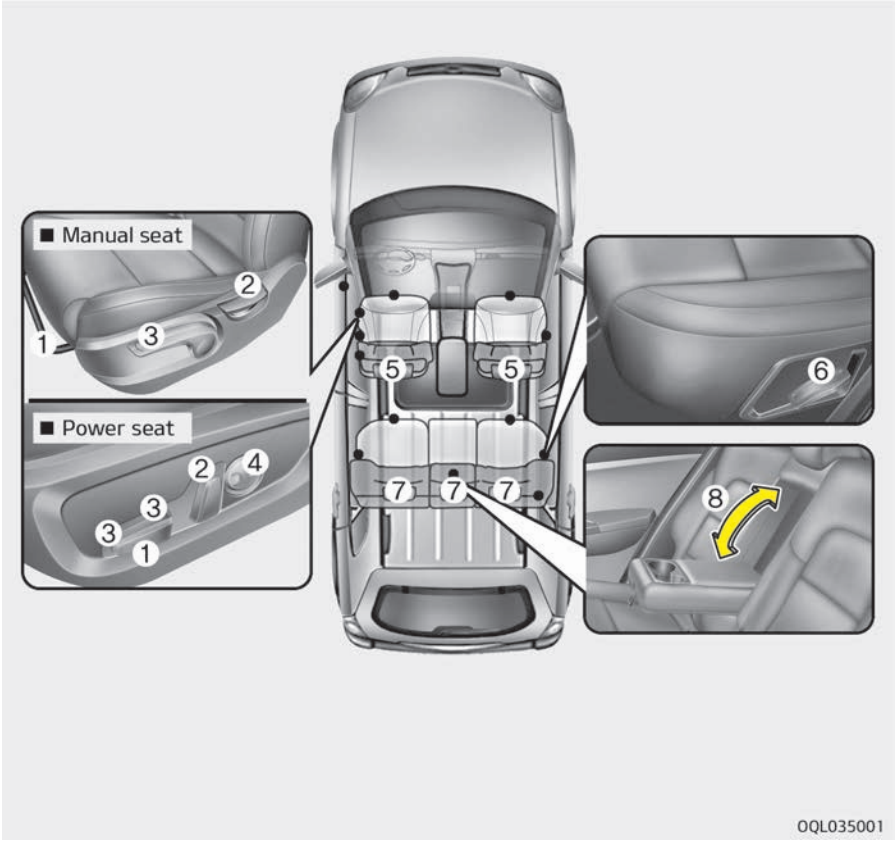

Front Seat

1. Forward and backward
2. Seatback angle
3. Seat cushion height *
4. Lumbar support (Driver's seat)*
5. Headrest

Rear seat

6. Seatback angle and folding
7. Headrest
8. Armrest

⚠ WARNING

■ Loose objects

Loose objects in the driver's foot area could interfere with the operation of the foot pedals, possibly causing an accident. Do not place anything under the front seats.

*: if equipped

⚠ WARNING

■ Uprighting seat

When you return the seatback to its upright position, hold the seatback and return it slowly and be sure there are no other occupants around the seat. If the seatback is returned without being held and controlled, the back of the seat could spring forward resulting in accidental injury to a person struck by the seatback.

⚠ WARNING

■ Driver responsibility for passengers

Riding in a vehicle with the seatback reclined could lead to serious or fatal injury in an accident. If a seat is reclined during an accident, the occupant's hips may slide under the lap portion of the seat belt applying great force to the unprotected abdomen. Serious or fatal internal injuries could result. The driver must advise the passenger to keep the seatback in an upright position whenever the vehicle is in motion.

⚠ WARNING

Do not use a sitting cushion that reduces friction between the seat and passenger. The passenger's hips may slide under the lap portion of the seat belt during an accident or a sudden stop. Serious or fatal internal injuries could result because the seat belt cannot operate normally.

⚠ WARNING

■ Driver's seat

- Never attempt to adjust the seat while the vehicle is moving. This could result in loss of control, and an accident causing death, serious injury, or property damage.
- Do not allow anything to interfere with the normal position of the seatback. Storing items against a seatback or in any other way interfering with proper locking of a seatback could result in serious or fatal injury in a sudden stop or collision.

(Continued)

(Continued)

- Always drive and ride with your seatback upright and the lap portion of the seat belt snug and low across the hips. This is the best position to protect you in case of an accident.
- In order to avoid unnecessary and perhaps severe air bag injuries, always sit as far back as possible from the steering wheel while maintaining comfortable control of the vehicle. We recommend that your chest be at least 25 cm (10 in.) away from the steering wheel.

⚠ WARNING

■ Rear seatbacks

- The rear seatback must be securely latched. If not, passengers and objects could be thrown forward resulting in serious injury or death in the event of a sudden stop or collision.

(Continued)

(Continued)

- **Luggage and other cargo should be laid flat in the cargo area. If objects are large, heavy, or must be piled, they must be secured.**
  Under no circumstances should cargo be piled higher than the seatbacks. Failure to follow these warnings could result in serious injury or death in the event of a sudden stop, collision or rollover.
- **No passenger should ride in the cargo area or sit or lie on folded seatbacks while the vehicle is moving. All passengers must be properly seated in seats and restrained properly while riding.**
- **When resetting the seatback to the upright position, make sure it is securely latched by pushing it forward and backwards.**
- **To avoid the possibility of burns, do not remove the carpet in the cargo area.**
  Emission control devices beneath this floor generate high temperatures.

⚠ WARNING

After adjusting the seat, always check that it is securely locked into place by attempting to move the seat forward or backward without using the lock release lever. Sudden or unexpected movement of the driver's seat could cause you to lose control of the vehicle resulting in an accident.

⚠ WARNING

- **Do not adjust the seat while wearing seat belts. Moving the seat cushion forward may cause strong pressure on the abdomen.**
- **Use extreme caution so that hands or other objects are not caught in the seat mechanisms while the seat is moving.**
- **Do not put a cigarette lighter on the floor or seat. When you operate the seat, gas may gush out of the lighter and cause fire.**

(Continued)

(Continued)

- **If there are occupants in the rear seats, be careful while adjusting the front seat position.**
- **Use extreme caution when picking small objects trapped under the seats or between the seat and the center console. Your hands might be cut or injured by the sharp edges of the seat mechanism.**

Feature of seat leather

- Leather is made from the outer skin of an animal, which goes through a special process to be available for use. Since it is a natural substance, each part differs in thickness or density.
  Wrinkles may appear as a natural result of stretching and shrinking depending on the temperature and humidity.
- The seat is made of stretchable fabric to improve comfort.
- The parts contacting the body are curved and the side supporting area is high which provides driving comfort and stability.

• Wrinkles may appear naturally from usage. It is not a fault of the product.

⚠ CAUTION

- **Wrinkles or abrasions which appear naturally from usage are not covered by warranty.**
- **Belts with metallic accessories, zippers or keys inside the back pocket may damage the seat fabric.**
- **Make sure not to wet the seat. It may change the nature of natural leather.**
- **Jeans or clothes which could bleach may contaminate the surface of the seat covering fabric.**

Front seat adjustment - manual

Forward and backward

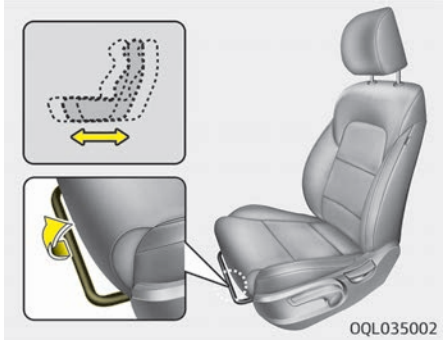

To move the seat forward or backward:

1. Pull the seat slide adjustment lever up and hold it.
2. Slide the seat to the position you desire.
3. Release the lever and make sure the seat is locked in place.

Adjust the seat before driving, and make sure the seat is locked securely by trying to move forward and backward without using the lever. If the seat moves, it is not locked properly.

Seatback angle

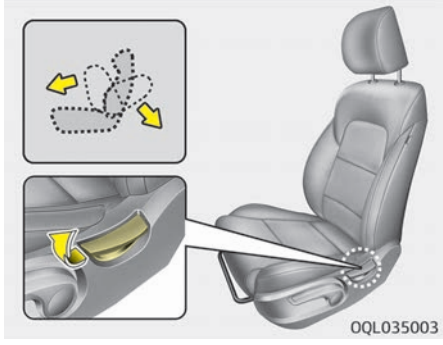

To recline the seatback:

1. Lean forward slightly and lift up the seatback recline lever.
2. Carefully lean back on the seat and adjust the seatback of the seat to the position you desire.
3. Release the lever and make sure the seatback is locked in place. (The lever MUST return to its original position for the seatback to lock.)

Reclining seatback

Sitting in a reclined position when the vehicle is in motion can be dangerous. Even when buckled up, the protections of your restraint system (seat belts and/or air bags) is greatly reduced by reclining your seatback.

⚠ WARNING

NEVER ride with a reclined seatback when the vehicle is moving.
Riding with a reclined seatback increases your chance of serious or fatal injuries in the event of a collision or sudden stop.
Drivers and passengers should ALWAYS sit well back in their seats, properly belted, and with the seatbacks upright.

Seat belts must be snug against your hips and chest to work properly. When the seatback is reclined, the shoulder belt cannot do its job because it will not be snug against your chest. Instead, it will be in front of you. During an accident, you could be thrown into the seat belt, causing neck or other injuries.

The more the seatback is reclined, the greater chance the passenger's hips will slide under the lap belt or the passenger's neck will strike the shoulder belt.

Seat height (if equipped)

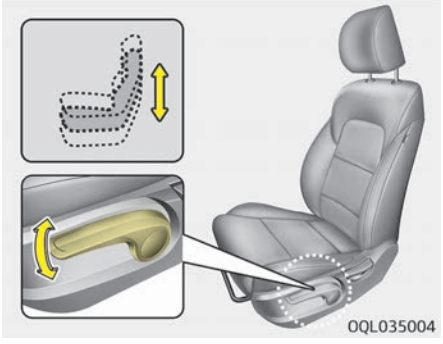

To change the height of the seat, push the lever upwards or downwards.

- To lower the seat cushion, push the lever down several times.
- To raise the seat cushion, pull the lever up several times.

Lumbar support (if equipped)

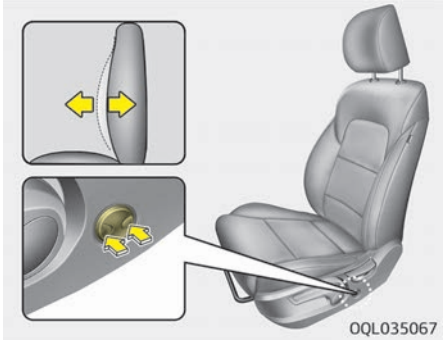

The lumbar support can be adjusted by pressing the lumbar support switch on the side of the driver's seat.

1. Press the front portion of the switch to increase support, or the rear portion of the switch, to decrease support.
2. Release the switch once it reaches the desired position.

Front seat adjustment - power (if equipped)

The front seat can be adjusted by using the control switches located on the outside of the seat cushion. Before driving, adjust the seat to the proper position so you can easily control the steering wheel, pedals and switches on the instrument panel.

⚠ WARNING

The power seat is operable with the ignition OFF.
Therefore, children should never be left unattended in the vehicle.

⚠ CAUTION

- **The power seat is driven by an electric motor. Stop operating once the adjustment is completed. Excessive operation may damage the electrical equipment.**

(Continued)

(Continued)

- **When in operation, the power seat consumes a large amount of electrical power. To prevent unnecessary charging system drain, don't adjust the power seat longer than necessary while the engine is not running.**
- **Do not operate two or more power seat control switches at the same time. Doing so may result in power seat motor or electrical component malfunction.**

Forward and backward

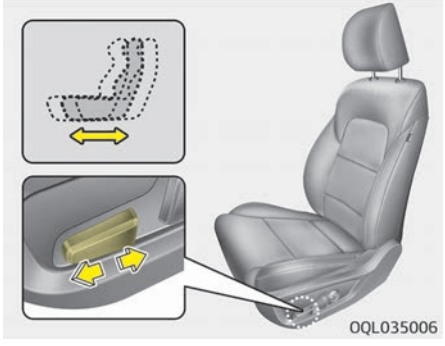

Push the control switch forward or backward to move the seat to the desired position. Release the switch once the seat reaches the desired position.

Seatback angle

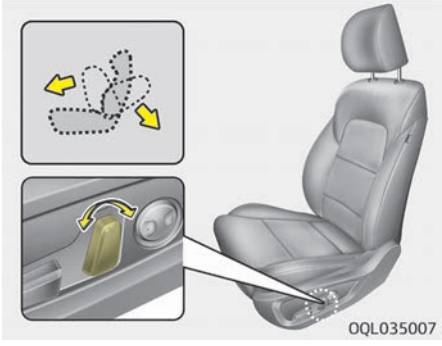

Push the control switch forward or backward to move the seatback to the desired angle. Release the switch once the seat reaches the desired position.

Seat height (if equipped)

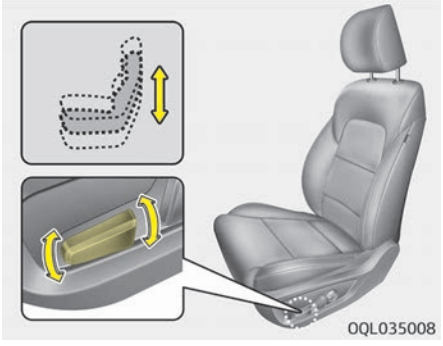

Pull the front portion of the control switch up to raise or press down to lower the front part of the seat cushion. Pull the rear portion of the control switch up to raise or press down to lower the rear part of the seat cushion. Release the switch once the seat reaches the desired position.

Lumbar support (for driver's seat, if equipped)

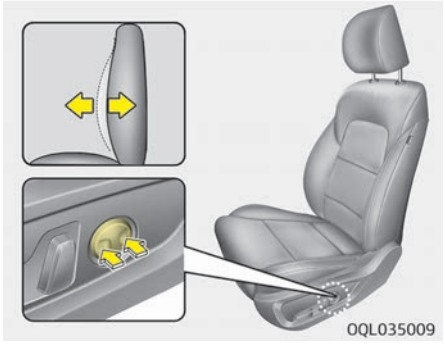

The lumbar support can be adjusted by pressing the lumbar support switch on the side of the seat.

1. Press the front portion of the switch to increase support, or the rear portion of the switch, to decrease support.
2. Release the switch once it reaches the desired position.

Headrest (for front seat)

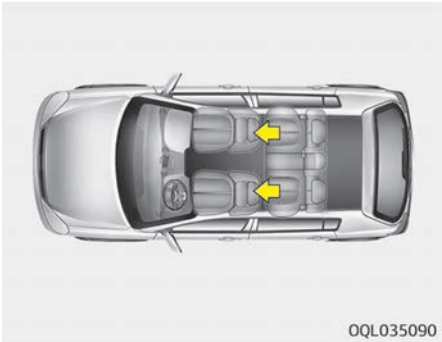

The driver's and front passenger's seats are equipped with a headrest for the occupant's safety and comfort.
The headrest not only provides comfort for the driver and front passenger, but also helps protect the head and neck in the event of a collision.

⚠ WARNING

- **For maximum effectiveness in case of an accident, the headrest should be adjusted so the middle of the headrest is at the same height of the center of gravity of an occupant's head. Generally, the center of gravity of most people's head is similar with the height of the top of their eyes. Also, adjust the headrest as close to your head as possible. For this reason, the use of a cushion that holds the body away from the seatback is not recommended.**
- **Do not operate the vehicle with the headrests removed. Severe injury to the occupants may occur in the event of an accident. Headrests may provide protection against neck injuries when properly adjusted.**
- **Do not adjust the headrest position of the driver's seat while the vehicle is in motion.**

Adjusting the height up and down

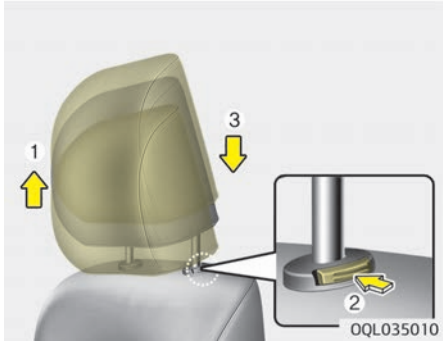

To raise the headrest, pull it up to the desired position (1). To lower the headrest, push and hold the release button (2) and lower the headrest to the desired position (3).

Forward and backward adjustment



The headrest may be adjusted forward to 3 different positions by pulling the headrest forward to the desired detent.
To adjust the headrest to its furthest backwards position:

- Pull the headrest fully forward to the farthest position and release it.
- Adjust the headrest so that it properly supports the head and neck.

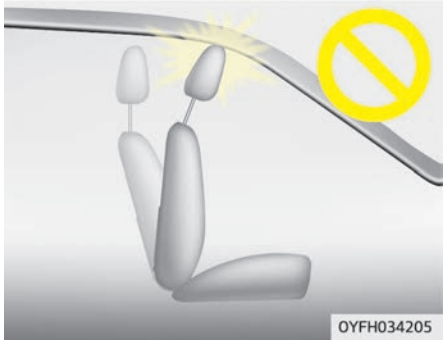

⚠ CAUTION

If you recline the seatback towards the front with the headrest and seat cushion raised, the headrest may come in contact with the sunvisor or other parts of the vehicle.

Removal/Reinstall

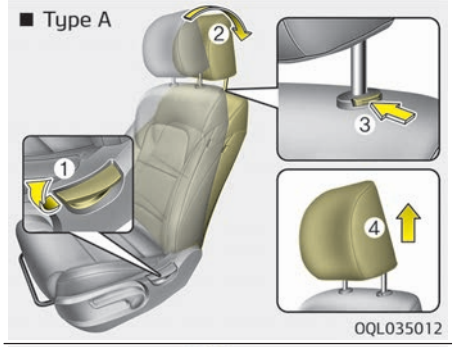

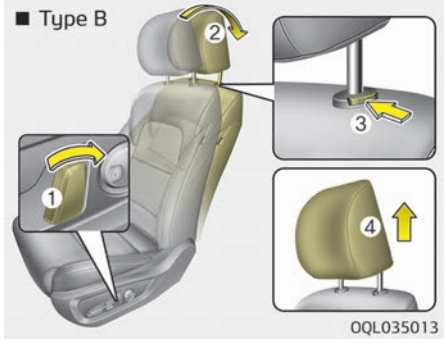

To remove the headrest:

1. Recline the seatback (2) with the recline lever or switch (1).

2. Raise headrest as far as it can go.
3. Press the headrest release button (3) while pulling the headrest up (4).

⚠ WARNING

NEVER allow anyone to ride in a seat with the headrest removed or reversed.

■ Type A

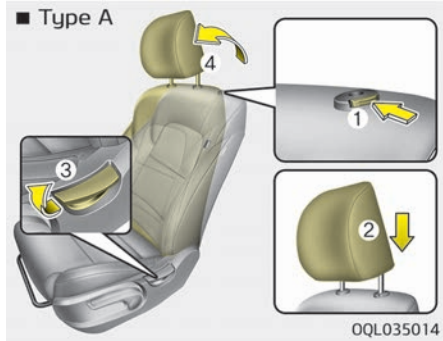

OQL035014

■ Type B

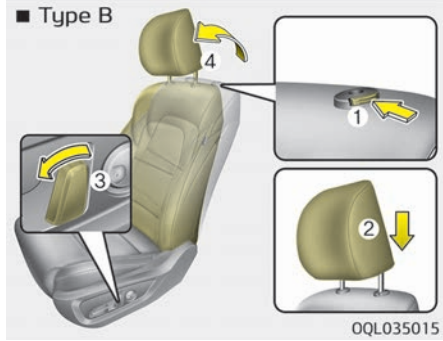

OQL035015

To reinstall the headrest:

1. Put the headrest poles (2) into the holes while pressing the release button or switch (1).
2. Recline the seatback (4) with the recline lever or switch (3).
3. Adjust the headrest to the appropriate height.

⚠ WARNING

Always make sure the headrest locks into position after reinstalling and adjusting it properly.

Seatback pocket

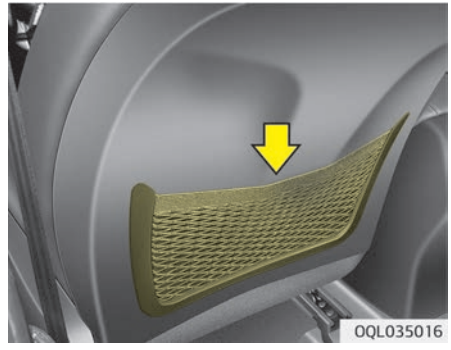

OQL035016

The seatback pocket is provided on the back of the front passenger's and driver's seatbacks.

⚠ WARNING

■ Seatback pockets

Do not put heavy or sharp objects in the seatback pockets. In an accident they could come loose from the pocket and injure vehicle occupants.

Rear seat

Folding the rear seat

The rear seatbacks can be folded to facilitate carrying long items or to increase the luggage capacity of the vehicle.

⚠ WARNING

The purpose of the fold-down rear seatbacks is to allow you to carry longer objects that could not be accommodated in the cargo area.
Never allow passengers to sit on top of the folded down seatback while the vehicle is moving. This is not a proper seating position and no seat belts are available for use. This could result in serious injury or death in case of an accident or sudden stop.
(Continued)

(Continued)

Objects carried on the folded down seatback should not extend higher than the top of the front seatbacks. This could allow cargo to slide forward and cause injury or damage during sudden stops.

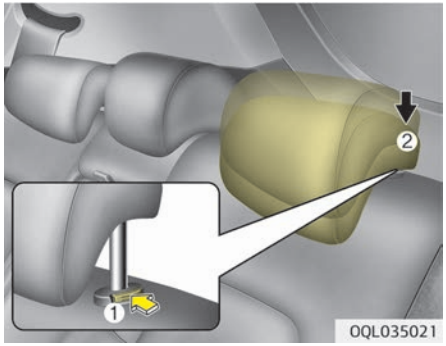

To fold down the rear seatback:

1. Set the front seatback to the upright position and if necessary, slide the front seat forward.
2. Lower the rear head restraints to the lowest position.

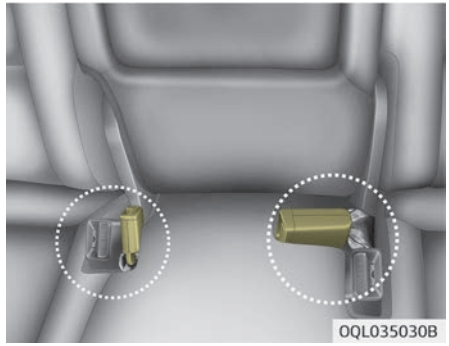

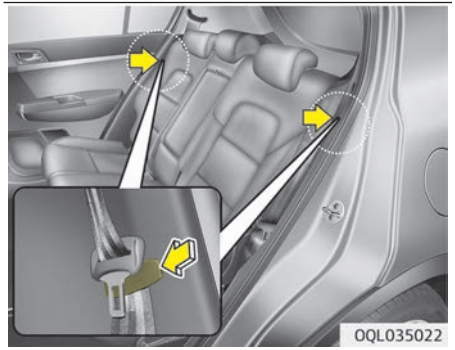

3. Insert the rear seat belt buckle in the pocket between the rear seatback and cushion, and insert the rear seat belt webbing in the guide to prevent the seat belt from being damaged.

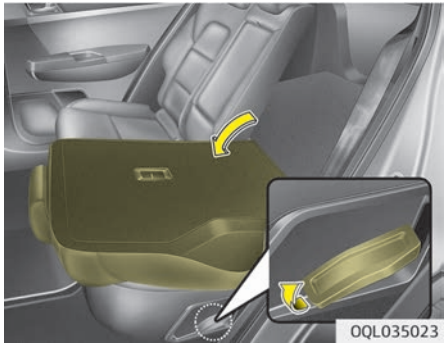

4. Lift up the front portion of the seatback folding lever, then fold the seat toward the front of the vehicle.
   When you return the seatback to its upright position, always be sure it has locked into position by pushing on the top of the seatback.

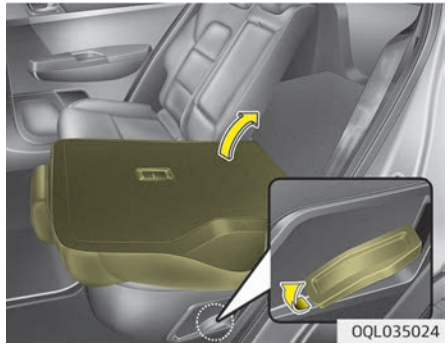

5. To use the rear seat, lift and push the seatback rearward by lifting up the front portion of the folding lever.
   Push the seatback firmly until it clicks into place. Make sure the seatback is locked in place.

⚠ WARNING

When returning the rear seatback from a folded to an upright position, hold the seatback and return it slowly. Ensure that the seatback is completely locked into its upright position by pushing on the top of the seatback. In an accident or sudden

(Continued)

(Continued)

stop, the unlocked seatback could allow cargo to move forward with great force and enter the passenger compartment, which could result in serious injury or death.

⚠ WARNING

Do not place objects in the rear seats, since they cannot be properly secured and may hit vehicle occupants in a collision causing serious injury or death.

⚠ WARNING

Make sure the engine is off, the shift lever is in P (Park), and the parking brake is securely applied whenever loading or unloading cargo. Failure to take these steps may allow the vehicle to move if the shift lever is inadvertently moved to another position.

Armrest

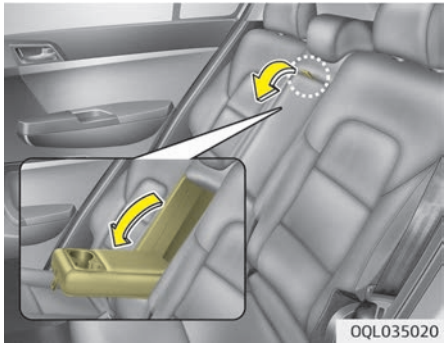

To use the armrest, pull it forward from the seatback.

Headrest

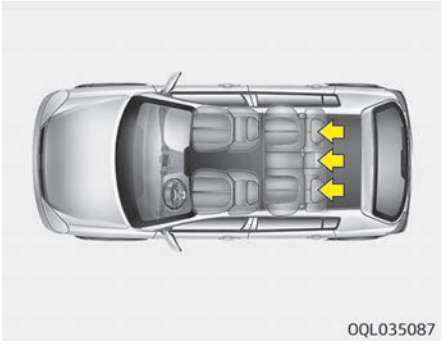

The rear seat(s) is equipped with headrests in all the seating positions for the occupant's safety and comfort. The headrest not only provides comfort for passengers, but also helps protect the head and neck in the event of a collision.

⚠ WARNING



- **For maximum effectiveness in case of an accident, the headrest should be adjusted so the middle of the headrest is at the same height of the center of gravity of an occupant's head. Generally, the center of gravity of most people's head is similar with the height of the top of their eyes. Also adjust the headrest as close to your head as possible. For this reason, the use of a cushion that holds the body away from the seatback is not recommended.**
- **Do not operate the vehicle with the headrests removed. Severe injury to an occupant may occur in the event of an accident. Headrests may provide protection against severe neck injuries when properly adjusted.**

⚠ CAUTION

When there is no occupant in the rear seats, adjust the height of the headrest to the lowest position. The rear seat headrest can reduce the visibility of the rear area.

Adjusting the height up and down

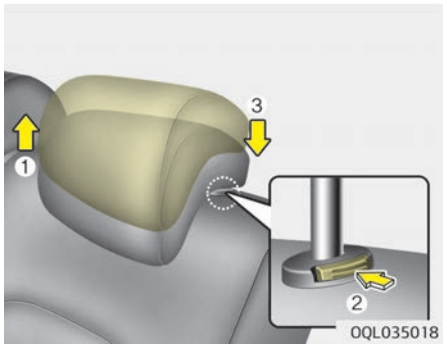

To raise the headrest, pull it up to the desired position (1). To lower the headrest, push and hold the release button (2) on the headrest support and lower the headrest to the desired position (3).

SEAT BELTS

Seat belt restraint system

⚠ WARNING

- **For maximum restraint system protection, the seat belts must always be used whenever the vehicle is moving.**
- **Seat belts are most effective when seatbacks are in the upright position.**
- **Children age 12 and under must always be properly restrained in the rear seat. If a child over 12 must be seated in the front seat, he/she must be properly belted and the seat should be moved as far back as possible.**
- **Never wear the shoulder belt under your arm or behind your back. An improperly positioned shoulder belt can cause serious injuries in a crash.**
  The shoulder belt should be positioned midway over your shoulder across your collarbone.

(Continued)

(Continued)

- **Never wear a seat belt over fragile objects. If there is a sudden stop or impact, the seat belt can damage it.**
- **Avoid wearing twisted seat belts. A twisted belt can't do its job well. In a collision, it could even cut into you. Be sure the belt webbing is straight and not twisted.**
- **Be careful not to damage the belt webbing or hardware. If the belt webbing or hardware is damaged, replace it.**

⚠ WARNING

Seat belts are designed to bear upon the bony structure of the body, and should be worn low across the front of the pelvis or the pelvis, chest and shoulders, as applicable; wearing the lap section of the belt across the abdominal area must be avoided.
Seat belts should be adjusted as firmly as possible, consistent with comfort, to provide the protection for which they have been designed.

(Continued)

(Continued)

A slack belt will greatly reduce the protection afforded to the wearer.
Care should be taken to avoid contamination of the webbing with polishes, oils and chemicals, and particularly battery acid. Cleaning may safely be carried out using mild soap and water. The belt should be replaced if webbing becomes frayed, contaminated or damaged. It is essential to replace the entire assembly after it has been worn in a severe impact even if damage to the assembly is not obvious. Belts should not be worn with straps twisted.
Each belt assembly must only be used by one occupant; it is dangerous to put a belt around a child being carried on the occupant's lap.

⚠ WARNING

- **No modifications or additions should be made by the user which will either prevent the seat belt adjusting devices from operating to remove slack, or prevent the seat belt assembly from being adjusted to remove slack.**
- **When you fasten the seat belt, be careful not to latch the seat belt in buckles of other seat. It's very dangerous and you may not be protected by the seat belt properly.**
- **Do not unfasten the seat belt and do not fasten and unfasten the seat belt repeatedly while driving. This could result in loss of control, and an accident causing death, serious injury, or property damage.**
- **When fastening the seat belt, make sure that the seat belt does not pass over objects that are hard or can break easily.**
- **Make sure there is nothing in the buckle. The seat belt may not be fastened securely.**

Driver's seat belt warning



As a reminder to the driver, the seat belt warning light will illuminate for approximately 6 seconds each time you turn the ignition switch ON regardless of belt fastening.
If the driver's seat belt is unfastened after the ignition switch is ON, the seat belt warning light illuminates until the belt is fastened.
If you continue not to fasten the seat belt and you drive over 9 km/h, the illuminated warning light will start to blink (if equipped).
If you continue not to fasten the seat belt and you drive over 20 km/h the seat belt warning chime will sound for approximately 100 seconds and the corresponding warning light will blink (if equipped).
If you unfasten the seat belt while driving under 20 km/h the seat belt warning light will illuminate until the seat belt is fastened.

⚠ WARNING

Riding in an improper position adversely affects the front seat belt warning system. It is important for the driver to instruct the passenger to properly be seated as instructed in this manual.

✻ NOTICE

- You can find the front passenger's seat belt warning light on the center fascia panel.

(Continued)

(Continued)

- Although the front passenger seat is not occupied, the seat belt warning light will blink or illuminate for 6 seconds.
- The front passenger's seat belt warning may operate when luggage is placed on the front passenger seat.

Rear passenger's seat belt warning (if equipped)

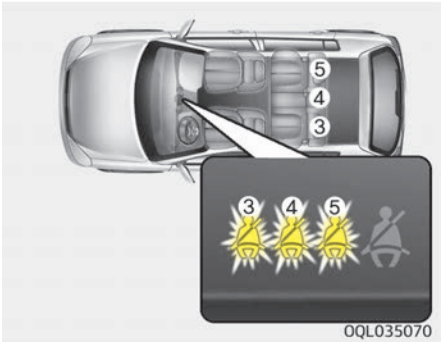

If the ignition switch is turned ON (engine is not running) when the rear passenger's lap/shoulder belt is not fastened, the corresponding seat belt warning light will illuminate until the belt is fastened.
And then, the rear corresponding seat belt warning light will illuminate for approximately 35 seconds, if any of following occurs;

- You start the engine when the rear belt is not fastened.
- You drive over 9 km/h when the rear belt is not fastened.
- The rear belt is disconnected when driving under 20 km/h.

If the rear seat belt is fastened, the warning light will turn off immediately.
If the rear seat belt is disconnected when you drive over the 20 km/h, the corresponding seat belt warning light will blink and warning chime will sound for 35 seconds.
But, if the rear passenger's lap/shoulder belt is/are connected and disconnected twice within 9 seconds after the belt is fastened, the corresponding seat belt warning light will not operate.

Lap/shoulder belt

Height adjustment (for front seat)

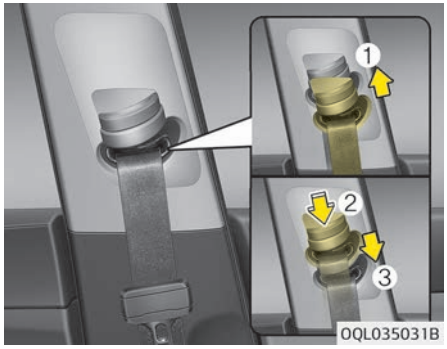

You can adjust the height of the shoulder belt anchor to one of 4 positions for maximum comfort and safety.
The height of the adjusting seat belt should not be too close to your neck. You will not be getting the most effective protection. The shoulder portion should be adjusted so that it lies across your chest and midway over your shoulder near the door and not your neck.
To adjust the height of the seat belt anchor, lower or raise the height adjuster into an appropriate position.

To raise the height adjuster, pull it up (1). To lower it, push it down (3) while pressing the height adjuster button (2). Release the button to lock the anchor into position. Try sliding the height adjuster to make sure that it has locked into position.
Improperly positioned seat belts can cause serious injuries in an accident.

⚠ WARNING

- **Verify the shoulder belt anchor is locked into position at the appropriate height. Never position the shoulder belt across your neck or face.**
  Improperly positioned seat belts can cause serious injuries in an accident.
- **Failure to replace seat belts after an accident could leave you with damaged seat belts that will not provide protection in the event of another collision leading to personal injury or death. Replace your seat belts after being in an accident as soon as possible.**

To fasten your seat belt:

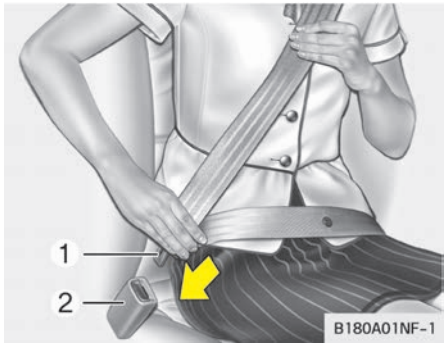

To fasten your seat belt, pull it out of the retractor and insert the metal tab (1) into the buckle (2). There will be an audible "click" when the tab locks into the buckle.
The seat belt automatically adjusts to the proper length only after the lap belt portion is adjusted manually so that it fits snugly around your hips. If you lean forward in a slow, easy motion, the belt will extend and let you move around. If there is a sudden stop or impact, however, the belt will lock into position. It will also lock if you try to lean forward too quickly.

✻ NOTICE

If you are not able to pull out the seat belt from the retractor, firmly pull the belt out and release it. Then you will be able to pull the belt out smoothly.

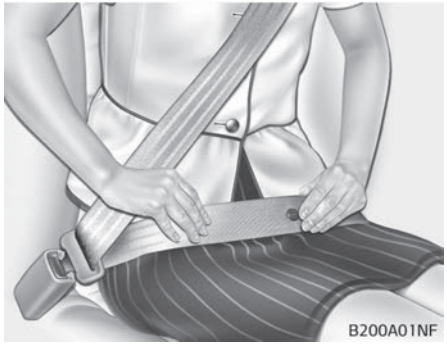

⚠ WARNING

You should place the lap belt portion as low as possible and snugly across your hips, not on your waist. If the
(Continued)

(Continued)

lap belt is located too high on your waist, it may increase the chance of injury in the event of a collision. Both arms should not be under or over the belt. Rather, one should be over and the other under, as shown in the illustration.
Never wear the seat belt under the arm near the door.

To release the seat belt:

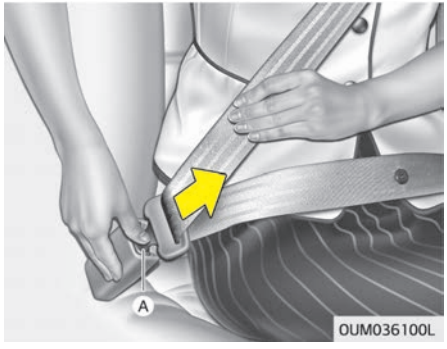

The seat belt is released by pressing the release button (A) in the locking buckle. When it is released, the belt should automatically draw back into the retractor.
If this does not happen, check the belt to be sure it is not twisted, then try again.

Rear center seatbelt (Lap belt type)

To fasten your seat belt:

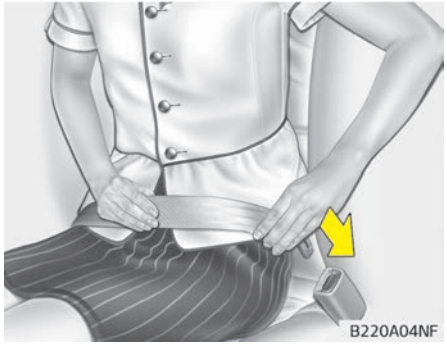

To fasten a 2-point static type belt, insert the metal tab (1) into the locking buckle (2). There will be an audible "click" when the tab locks into the buckle. Check to make sure the belt is properly locked and that the belt is not twisted.

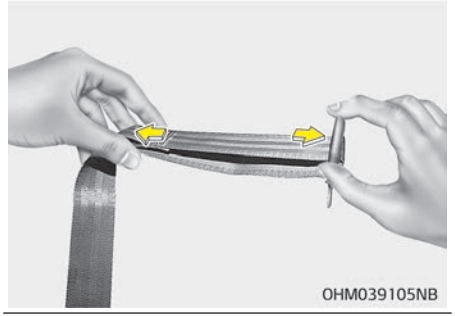

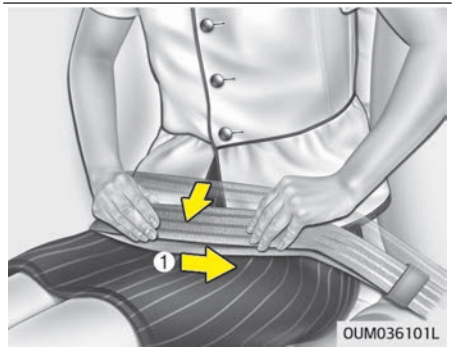

With a 2-point static type seat belt, the length must be adjusted manually so it fits snugly around your body. Fasten the belt and pull on the loose end to tighten. The belt should be placed as low as possible on your hips (1), not on your waist. If the belt is too high, it could increase the possibility of your being injured in an accident.

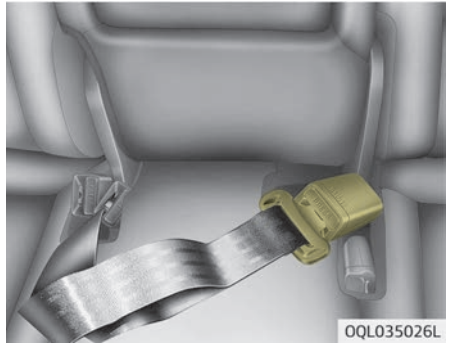

When using the rear center seat belt, the buckle with the “CENTER” mark must be used.

To release the seat belt:

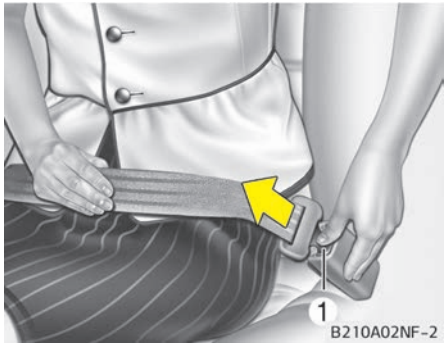

When you want to release the seat belt, press the button (1) in the locking buckle.

⚠ WARNING

The center lap belt latching mechanism is different from those for the rear seat shoulder belts. When fastening the rear seat shoulder belts or the center lap belt, make sure they are inserted into the correct

(Continued)

(Continued)

buckles to obtain maximum protection from the seat belt system and assure proper operation.

Rear center seatbelt (Shoulder belt type)

To fasten your seatbelt:

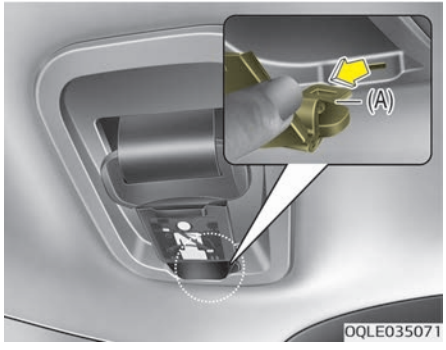

1. Extract the tongue plate (A) from the hole on the belt assembly cover.

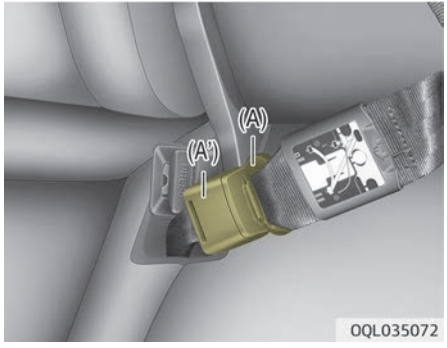

2. Insert the tongue plate (A) into the buckle (A') until an audible "click" is heard, indicating the latch is locked. Make sure the belt is not twisted.

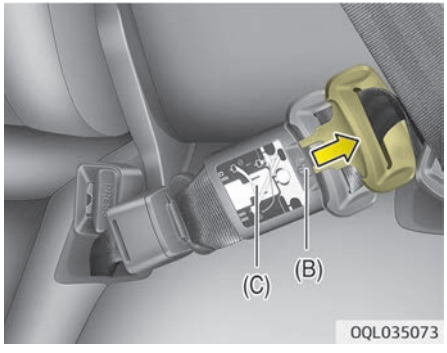

3. Pull out the tongue plate (B) from the pocket (C).

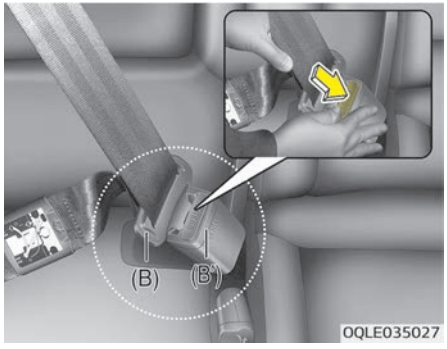

4. Pull the tongue plate (B) and insert it into the buckle (B') until an audible "click" is heard, indicating the latch is locked. Make sure the belt is not twisted.

When using the rear center seat belt, the buckle with the "CENTER" mark must be used.

✻ NOTICE

If you are not able to pull out the safety belt from the retractor, firm-

(Continued)

(Continued)

ly pull the belt out and release it. After release, you will be able to pull the belt out smoothly.

To release your seatbelt:

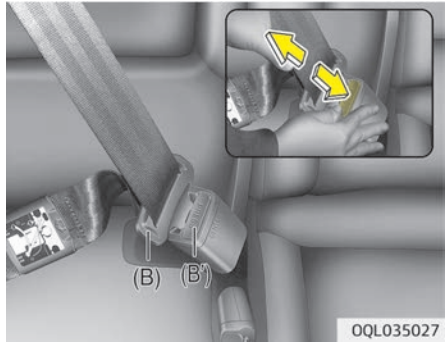

1. Press the release button on the buckle (B') and remove the tongue plate (B).

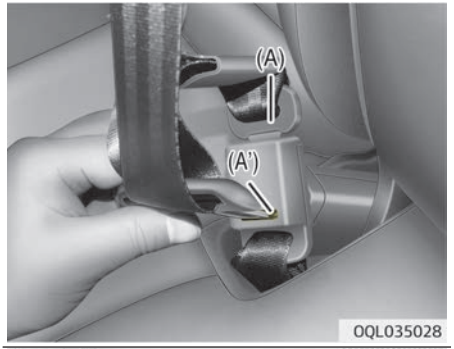

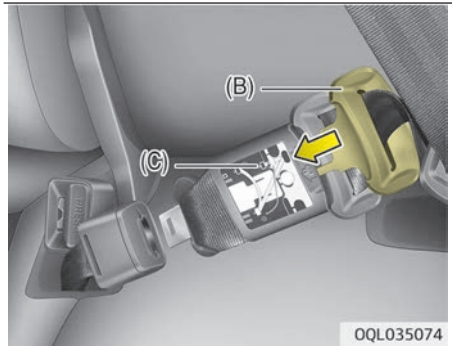

2. Insert the tongue plate (B) into the pocket (C).

3. To retract the rear center seatbelt, insert the tongue plate into the web release hole (A'). Pull up on the seat belt web and allow the webbing to retract automatically.

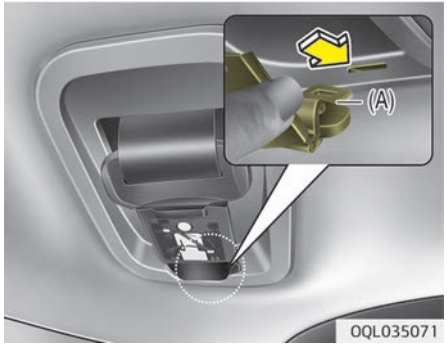

4. Insert the tongue plate (A) into the hole on the belt assembly cover.

Stowing the rear seat belt

■ Type A

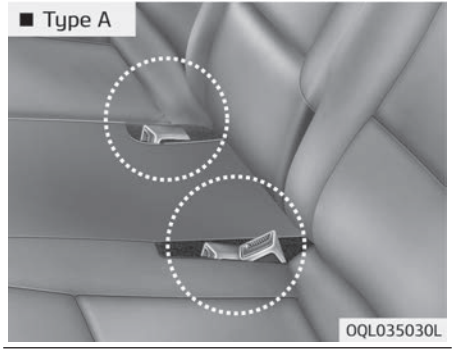

■ Type B

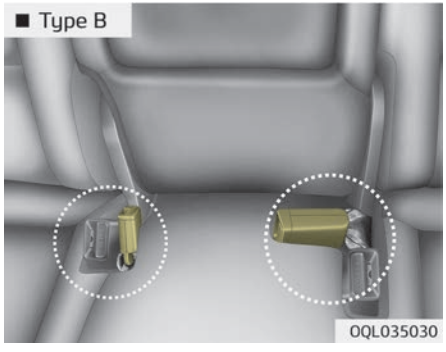

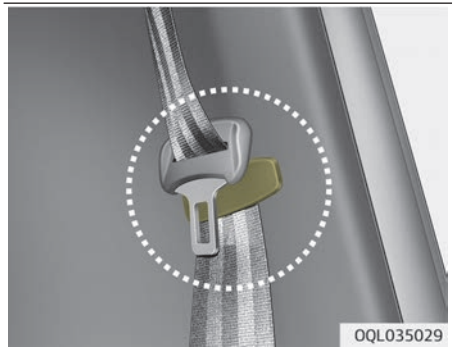

- The rear seat belt buckles can be stowed in the pocket between the rear seatback and cushion when not in use.
- The center seat belt can be stowed with the plate and webbing rolled in the pocket between the rear seatback and cushion.
- Routing the seat belt webbing through the rear seat belt guides will help keep the belts from being trapped behind or under the seats.
  After inserting the seat belt, tighten the belt webbing by pulling it up.

⚠ CAUTION

When using the seat belt, use it after taking it out of the guides.
If you pull the seat belt when it is stored in the guides, it may damage the guides and/or belt webbing.

Pre-tensioner seat belt (if equipped)



Your vehicle is equipped with driver's and front passenger's pre-tensioner seat belts (retractor pretensioner and EFD (Emergency Fastening Device)). The pre-tensioner seat belts can be activated, where the frontal collision is severe enough, together with the air bags.
When the vehicle stops suddenly, or if the occupant tries to lean forward too quickly, the seat belt retractor will lock into position. In certain frontal collisions, the pre-tensioner will activate and pull the seat belt into tighter contact against the occupant's body.

1. Retractor Pretensioner
   The purpose of the retractor pretensioner is to make sure that the shoulder belts fit in tightly against the occupant's upper body in certain frontal collisions.
2. EFD (Emergency Fastening Device)
   The purpose of the EFD is to make sure that the pelvis belts fit in tightly against the occupant's lower body in certain frontal collisions.

If the system senses excessive tension on the driver or passenger's seat belt when the pre-tensioner system activates, the load limiter inside the retractor pre-tensioner will release some of the pressure on the affected seat belt. (if equipped)

✻ NOTICE

■ if equipped with rollover sensor

The pre-tensioner will activate not only in a frontal collision but also in a side collision or rollover, if the vehicle is equipped with a side or curtain air bag.

✻ NOTICE

■ without rollover sensor

The pre-tensioner will activate not only in a frontal collision but also in a side collision, if the vehicle is equipped with a side or curtain air bag.

⚠ WARNING

For your safety, be sure that the belt webbing is not loose or twisted and always sit properly on your seat.

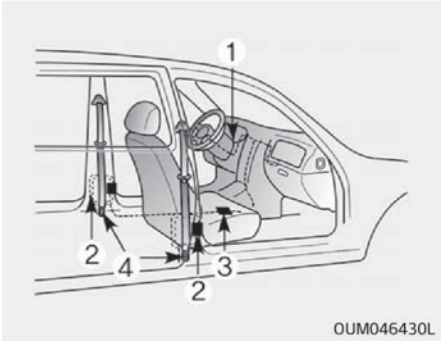

The seat belt pre-tensioner system consists mainly of the following components. Their locations are shown in the illustration:

1. SRS air bag warning light
2. Retractor pre-tensioner assembly
3. SRS control module
4. EFD (Emergency Fastening Device) (if equipped)

⚠ WARNING

To obtain maximum benefit from a pre-tensioner seat belt:

(Continued)

(Continued)

1. **The seatbelt must be worn correctly and adjusted to the proper position. Please read and follow all of the important information and precautions about your vehicle's occupant safety features – including seat belts and air bags – that are provided in this manual.**
2. **Be sure you and your passengers always wear seat belts properly.**

✻ NOTICE

- When the pre-tensioner seat belts are activated, a loud noise may be heard and fine dust, which may appear to be smoke, may be visible in the passenger compartment. These are normal operating conditions and are not hazardous.

(Continued)

(Continued)

- Although it is harmless, the fine dust may cause skin irritation and should not be breathed for prolonged periods. Wash all exposed skin areas thoroughly after an accident in which the pre-tensioner seat belts were activated.
- Because the sensor that activates the SRS air bag is connected with the pre-tensioner seat belt, the SRS air bag warning light on the instrument panel will illuminate for approximately 6 seconds after the ignition switch has been turned to the "ON" position, and then it should turn off.

⚠ CAUTION

If the pre-tensioner seat belt is not working properly, the SRS air bag warning light will illuminate even if there is no malfunction of the SRS air bag. If the SRS air bag warning light does not illuminate when the ignition key is turned to ON, or if it
(Continued)

(Continued)

remains illuminated after illuminating for approximately 6 seconds, or if it illuminates while the vehicle is being driven, have the system inspected by a professional workshop. Kia recommends to visit an authorized Kia dealer/service partner.

⚠ WARNING

- **Pre-tensioners are designed to operate only one time. After activation, pre-tensioner seat belts must be replaced. All seat belts, of any type, should always be replaced after they have been worn during a collision.**
- **The pre-tensioner seat belt assembly mechanisms become hot during activation. Do not touch the pre-tensioner seat belt assemblies for several minutes after they have been activated.**

(Continued)

(Continued)

- **Do not attempt to inspect or replace the pre-tensioner seat belts yourself. Have the system inspected by a professional workshop. Kia recommends to visit an authorized Kia dealer/service partner.**
- **Do not attempt to service or repair the pre-tensioner seat belt system in any manner.**
- **Improper handling of the pretensioner seat belt assemblies, and failure to heed the warnings not to strike, modify, inspect, replace, service or repair the pre-tensioner seat belt assemblies may lead to improper operation or inadvertent activation and serious injury.**
- **Always wear the seat belts when driving or riding in a motor vehicle.**
- **If the vehicle or pre-tensioner seat belt must be discarded, contact a professional workshop. Kia recommends to visit an authorized Kia dealer/service partner.**

⚠ CAUTION

Body work on the front area of the vehicle may damage the pretensioner seat belt system. Therefore, have the system serviced by a professional workshop. Kia recommends to visit an authorized Kia dealer/service partner.

Seat belt precautions

⚠ WARNING

All occupants of the vehicle must wear their seat belts at all times. Seat belts and child restraints reduce the risk of serious or fatal injuries for all occupants in the event of a collision or sudden stop. Without a seat belt, occupants could be shifted too close to a deploying air bag, strike the interior structure or be thrown from the vehicle. Properly worn seat belts greatly reduce these hazards.
Always follow the precautions about seat belts, air bags and occupant seating contained in this manual.

Infant or small child

You should be aware of the specific requirements in your country. Child and/or infant seats must be properly placed and installed in the rear seat. For more information about the use of these restraints, refer to "Child restraint system (CRS)" on page 3-31.

⚠ WARNING

Every person in your vehicle needs to be properly restrained at all times, including infants and children. Never hold a child in your arms or lap when riding in a vehicle. The violent forces created during a crash will tear the child from your arms and throw the child against the interior. Always use a child restraint appropriate for your child's height and weight.

✻ NOTICE

Small children are best protected from injury in an accident when
(Continued)

(Continued)

properly restrained in the rear seat by a child restraint system that meets the requirements of the Safety Standards of your country. Before buying any child restraint system, make sure that it has a label certifying that it meets Safety Standards of your country. The restraint must be appropriate for your child's height and weight. Check the label on the child restraint for this information. Refer to "Child restraint system (CRS)" on page 3-31.

Larger children

Children who are too large for child restraint systems should always occupy the rear seat and use the available lap/shoulder belts. The lap portion should be fastened and snugged on the hips and as low as possible. Check if the belt fits periodically. A child's squirming could put the belt out of position. Children are given the most safety in the event of an accident when they are restrained by a proper restraint system in the rear seat. If a larger child (over age 12) must be seated in the front seat, the child should be securely restrained by the available lap/shoulder belt and the seat should be placed in the rearmost position.

Children age 12 and under should be restrained securely in the rear seat. NEVER place a rear facing child seat in the front seat of a vehicle, unless the air bag is deactivated.

If the shoulder belt portion slightly touches the child's neck or face, try placing the child closer to the center of the vehicle. If the shoulder belt still touches their face or neck they need to be returned to a child restraint system.

⚠ WARNING

■ Shoulder belts on small children

- **Never allow a shoulder belt to be in contact with a child's neck or face while the vehicle is in motion.**
- **If seat belts are not properly worn and adjusted on children, there is a risk of death or serious injury.**

Pregnant women

The use of a seat belt is recommended for pregnant women to lessen the chance of injury in an accident. When a seat belt is used, the lap belt portion should be placed as low and securely as possible on the hips, not across the abdomen. For specific recommendations, consult a physician.

⚠ WARNING

■ Pregnant women

Pregnant women must never place the lap portion of the safety belt

(Continued)

(Continued)

over the area of the abdomen where the fetus is located or above the abdomen where the belt could crush the fetus during an impact.

Injured person

A seat belt should be used when an injured person is being transported. When this is necessary, you should consult a physician for recommendations.

One person per belt

Two people (including children) should never attempt to use a single seat belt. This could increase the severity of injuries in case of an accident.

Do not lie down

To reduce the chance of injuries in the event of an accident and to achieve maximum effectiveness of the restraint system, all passengers should be sitting up and the front and rear (2nd and/or 3rd row) seats should be in an upright position when the vehicle is moving. A seat belt cannot provide proper protection if the person is lying down in the rear seat or if the front and rear (2nd and/or 3rd row) seats are in a reclined position.

⚠ WARNING

Riding with a reclined seatback increases your chance of serious or fatal injuries in the event of a collision or sudden stop. The protection of your restraint system (seat belts and air bags) is greatly reduced by reclining your seat. Seat belts must be secured against your hips and chest to work properly. The more the seatback is reclined, the greater the chance an occupant's hips will slide under the lap belt causing serious internal injuries. Also, the shoulder belt may strike the occupant's neck. Drivers and passengers should always sit well back in their seats, properly belted, and with the seatbacks upright.

Care of seat belts

Seat belt systems should never be disassembled or modified. In addition, care should be taken to assure that seat belts and belt hardware are not damaged by seat hinges, doors or other abuse.

⚠ WARNING

When you return the rear seatback to its upright position after the rear seatback has been folded down, be careful not to damage the seat belt webbing or buckle. Be sure that the webbing or buckle does not get caught or pinched in the rear seat. A seat belt with damaged webbing or buckle could possibly fail during a collision or sudden stop, resulting in serious injury. If the webbing or buckles are damaged, get them replaced immediately.

Periodic inspection

All seat belts should be inspected periodically for wear or damage of any kind. Any damaged parts should be replaced as soon as possible.

Keep belts clean and dry

Seat belts should be kept clean and dry. If belts become dirty, they can be cleaned by using a mild soap solution and warm water. Bleach, dye, strong detergents or abrasives should not be used because they may damage and weaken the fabric.

When to replace seat belts

Entire in-use seat belt assembly or assemblies should be replaced if the vehicle has been involved in an accident. This should be done even if no damage is visible. In this case, have the system replaced by a professional workshop. Kia recommends to consult an authorized Kia dealer/service partner.

CHILD RESTRAINT SYSTEM (CRS)

Our recommendation: Children always in the rear

⚠ WARNING

Always properly restrain children in the vehicle. Children of all ages are safer when riding in the rear seats. Never place a rearward-facing Child Restraint System on the front passenger seat, unless the air bag is deactivated.

Children under age 13 should always ride in the rear seats and must always be properly restrained to minimize the risk of injury in an accident, sudden stop or sudden maneuver.
According to accident statistics, children are safer when properly restrained in the rear seats than in the front seat. Children too large for a Child Restraint System must use the seat belts provided.
Most countries have regulations which require children to travel in approved Child Restraint Systems.

The laws governing the age or height/weight restrictions at which seat belts can be used instead of Child Restraint System differs among countries, so you should be aware of the specific requirements in your country, and where you are travelling.
Child Restraint Systems must be properly installed in the vehicle seat. Always use a commercially available Child Restraint System that meets the requirements of your country.

Child restraint system (CRS)

Infants and younger children must be restrained in an appropriate rearward-facing or forward-facing CRS that has first been properly secured to the seat of the vehicle. Read and comply with the instructions for installation and use provided by the manufacturer of the Child Restraint System.

⚠ WARNING

- **Always follow the Child Restraint System manufacturer's instructions for installation and use.**

(Continued)

(Continued)

- **Always properly restrain your child in the Child Restraint System.**
- **Do not use an infant carrier or a child safety seat that "hooks" over a seatback, it may not provide adequate protection in an accident.**
- **After an accident, have the system checked by a professional workshop. Kia recommends to visit an authorized Kia dealer/service partner.**

Selecting a Child Restraint System (CRS)

When selecting a Child Restraint System for your child, always:

- Make sure the Child Restraint System has a label certifying that it meets applicable Safety Standards of your country.
  A Child Restraint System may only be installed if it was approved in accordance with the requirements of ECE-R44 or ECE-R129.
- Select a Child Restraint System based on your child's height and weight. The required label or the instructions for use typically provide this information.

- Select a Child Restraint System that fits the vehicle seating position where it will be used.
- Read and comply with the warnings and instructions for installation and use provided with the Child Restraint System.

Child Restraint System types

There are three main types of Child Restraint Systems: rearward-facing, forward-facing and booster Child Restraint Systems.
They are classified according to the child's age, height and weight.

Rearward-facing Child Restraint System

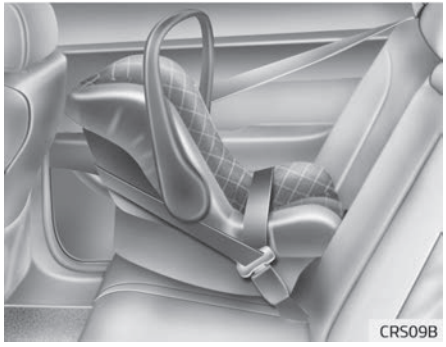

A rearward-facing Child Restraint System provides restraint with the seating surface against the back of the child. The harness system holds the child in place, and in an accident acts to keep the child positioned in the Child Restraint Systems and reduce the stress to the fragile neck and spinal cord.

All children under the age of one year must always ride in a rearwardfacing Child Restraint System. There are different types of rearward-facing Child Restraint Systems: infant-only Child Restraint Systems can only be used rearward-facing. Convertible and 3-in-1 Child Restraint Systems typically have higher height and weight limits for the rearward-facing position, allowing you to keep your child rearward-facing for a longer period of time.
Keep using Child Restraint Systems in the rearward-facing position as long as children fit within the height and weight limits allowed by the Child Restraint System's manufacturer.

Forward-facing Child Restraint System



A forward-facing Child Restraint System provides restraint for the child's body with a harness. Keep children in a forward-facing Child Restraint System with a harness until they reach the top height or weight limit allowed by your Child Restraint System's manufacturer. Once your child outgrows the forward-facing Child Restraint System, your child is ready for a booster seat.

Booster seats

A booster seat is a Child Restraint System designed to improve the fit of the vehicle's seat belt system. A booster seat positions the seat belt so that it fits properly over the stronger parts of your child's body. Keep your children in booster seats until they are big enough to fit in a seat belt properly.
For a seat belt to fit properly, the lap belt must lie comfortable across the upper thighs, not the stomach. The shoulder belt should lie comfortable across the shoulder and chest and not across the neck or face. Children under age 13 must always be properly restrained to minimize the risk of injury in an accident, sudden stop or sudden maneuver.

Installing a Child Restraint System (CRS)

⚠ WARNING

Before installing your Child Restraint System always:
Read and follow the instructions provided by the manufacturer of the Child Restraint System.
(Continued)

(Continued)

Failure to follow all warnings and instructions could increase the risk of the SERIOUS INJURY or DEATH if an accident occurs.

⚠ WARNING

If the vehicle headrest prevents proper installation of a Child Restraint System, the headrest of the respective seating position shall be readjusted or entirely removed.

After selecting a proper Child Restraint System for your child and checking that the Child Restraint System fits properly on the seating position, there are three general steps for a proper installation:

- **Properly secure the Child Restraint System to the vehicle.** All Child Restraint Systems must be secured to the vehicle with the lap part of a lap/shoulder belt or with the ISOFIX top-tether and/or ISOFIX anchorage and/or with the support leg.

- **Make sure the Child Restraint System is firmly secured.** After installing a Child Restraint System to the vehicle, push and pull the seat forward and from side-to-side to verify that it is securely attached to the seat. A Child Restraint System secured with a seat belt should be installed as firmly as possible. However, some side-to-side movement can be expected. When installing a Child Restraint System, adjust the vehicle seat and seatback (up and down, forward and rearward) so that your child fits in the Child Restraint System in a comfortable manner.
- **Secure the child in the Child Restraint System.** Make sure the child is properly strapped in the Child Restraint System according to the Child Restraint System manufacturer's instructions.

⚠ CAUTION

A Child Restraint System in a closed vehicle can become very hot. To prevent burns, check the seating surface and buckles before placing your child in the Child Restraint System.

ISOFIX anchorage and top-tether anchorage (ISOFIX anchorage system) for children

The ISOFIX system holds a Child Restraint System during driving and in an accident. This system is designed to make installation of the Child Restraint System easier and reduce the possibility of improperly installing your Child Restraint System. The ISOFIX system uses anchors in the vehicle and attachments on the Child Restraint System. The ISOFIX system eliminates the need to use seat belts to secure the Child Restraint System to the rear seats.
ISOFIX anchorages are metal bars built into the vehicle. There are two lower anchors for each ISOFIX seating position that will accommodate a Child Restraint System with lower attachments.
To use the ISOFIX system in your vehicle, you must have a Child Restraint System with ISOFIX attachments.
The Child Restraint System manufacturer will provide you with instructions on how to use the Child Restraint System with its attachments for the ISOFIX anchorages.

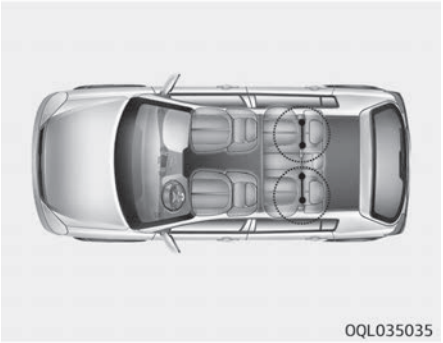

ISOFIX anchorages have been provided in the left and right outboard rear seating positions. Their locations are shown in the illustration.

⚠ WARNING

Do not attempt to install a Child Restraint System using ISOFIX anchorages in the rear center seating position. There are no ISOFIX anchorages provided for this seat. Using the outboard seat anchorages, for the CRS installation on the rear center seating position, can damage the anchorages.

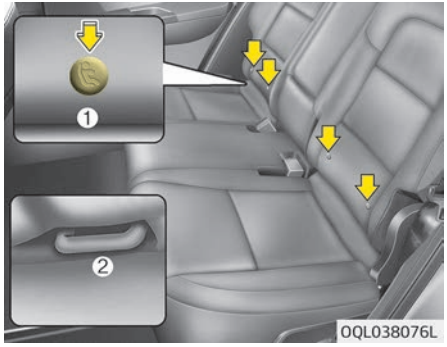

ISOFIX anchorages are located between the seatback and the seat cushion of the rear seat left and right outboard seating positions, indicated by the symbols.
To use the ISOFIX anchorages, push the upper portion of the ISOFIX anchorage cover.

1. ISOFIX Anchor Position Indicator
2. ISOFIX Anchor

Securing a Child Restraint System with the "ISOFIX Anchorage System"

To install an ISOFIX-compatible Child Restraint System in either of the rear outboard seating positions:

1. Move the seat belt buckle away from the ISOFIX anchorages.
2. Move any other objects away from the anchorages that could prevent a secure connection between the Child Restraint System and the ISOFIX anchorages.
3. Place the Child Restraint System on the vehicle seat, then attach the seat to the ISOFIX anchorages according to the instructions provided by the Child Restraint System manufacturer.
4. Follow the instructions of the Child Restraint System's manufacturer for proper installation and connection of the ISOFIX attachments on the Child Restraint System to the ISOFIX anchorages.

⚠ WARNING

Take the following precautions when using the ISOFIX system:

- **Read and follow all installation instructions provided with your Child Restraint System.**
- **To prevent the child from reaching and taking hold of unretracted seat belts, buckle all unused rear seat belts and retract the seat belt webbing behind the child. Children can be strangled if a shoulder belt becomes wrapped around their neck and the seat belt tightens.**
- **NEVER attach more than one Child Restraint System to a single anchorage. This could cause the anchor or attachment to come loose or break.**
- **Always have the ISOFIX system inspected by your dealer after an accident. An accident can damage the ISOFIX system and may not properly secure the Child Restraint System.**

Securing a Child Restraint System seat with "Top-tether Anchorage" system (if equipped)

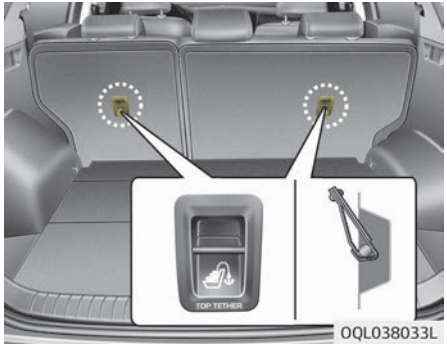

Child Restraint System top-tether anchorages are located on the back of the rear seatbacks.

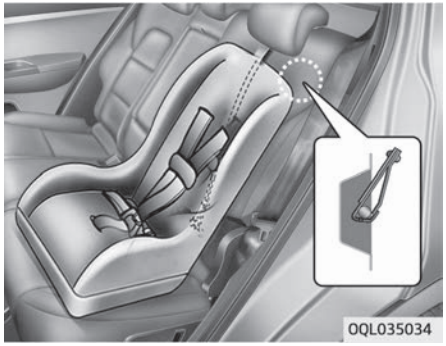

1. Route the Child Restraint System top-tether strap over the seatback. Placing the top-tether strap, please follow the instructions of the Child Restraint System manufacturer.
2. Connect the top-tether strap to the top-tether anchorage, then tighten the top-tether strap according to the instructions of your Child Restraint System's manufacturer to firmly attach the Child Restraint System to the seat.

⚠ WARNING

Take the following precautions when installing the top-tether:

- **Read and follow all installation instructions provided with your Child Restraint System.**
- **NEVER attach more than one Child Restraint System to a single ISO-FIX top-tether anchorage. This could cause the anchorage or attachment to come loose or break.**
- **Do not attach the top-tether to anything other than the correct top-tether anchorage. It may not work properly if attached to something else.**
- **Child Restraint System anchorages are designed to withstand only those loads imposed by correctly fitted Child Restraint System. Under no circumstances are they to be used for adult seat belts or harnesses or for attaching other items or equipment to the vehicle.**

Suitability of each seating position for ISOFIX Child Restraint Systems according to ECE regulations

Mass Group	Size Class	Fixture	Vehicle ISOFIX positions			
			Front Passenger	Rear Outboard (Driver Side)	Rear Outboard (Passenger Side)	Rear Center
Carrycot	F	ISO/L1	-	X	X	-
	G	ISO/L2	-	X	X	-
0: Up to 10 kg	E	ISO/R1	-	IL	IL	-
0+: Up to 13 kg	E	ISO/R1	-	IL	IL	-
	D	ISO/R2	-	IL	IL	-
	C	ISO/R3	-	IL	IL	-
I: 9 to 18 kg	D	ISO/R2	-	IL	IL	-
	C	ISO/R3	-	IL	IL	-
	B	ISO/F2	-	IUF + IL	IUF + IL	-
	B1	ISO/F2X	-	IUF + IL	IUF + IL	-
	A	ISO/F3	-	IUF + IL	IUF + IL	-

IUF = Suitable for ISOFIX forward-facing Child Restraint Systems of universal category approved for use in the mass group.
IL = Suitable for particular ISOFIX Child Restraint Systems given in the attached list.
These ISOFIX CRS are those of the "specific vehicle", "restricted" or "semi-universal" categories.
X = ISOFIX position not suitable for ISOFIX Child Restraint System in this mass group and/or this size class.
A - ISO/F3: Full-height forward-facing toddler Child Restraint System (height 720 mm)
B - ISO/F2: Reduced-height forward-facing toddler Child Restraint System (height 650 mm)
B1 - ISO/F2X: Reduced-height second version back surface shape forward- facing toddler Child Restraint System (height 650 mm)
C - ISO/R3: Full-size rearward-facing toddler Child Restraint System
D - ISO/R2: Reduced-size rearward-facing toddler Child Restraint System

E - ISO/R1: Infant-size rearward-facing Child Restraint System
F - ISO/L1: Left lateral facing position Child Restraint System (carry-cot)
G - ISO/L2: Right lateral facing position Child Restraint System (carry-cot)

❉ Both ISO/R2 and ISO/R3 are able to be set up only at the foremost position of the passenger seat.
❉ ISOFIX Child Restraint System size classes and fixtures

Securing a Child Restraint System with a lap/shoulder belt

When not using the ISOFIX system, all Child Restraint Systems must be secured to a rear seat with the lap part of a lap/shoulder belt.

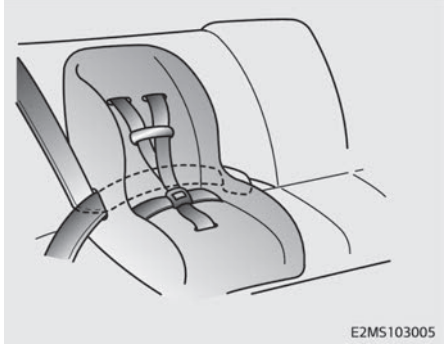

Installing a Child Restraint System with a lap/shoulder belt

To install a Child Restraint System on the rear seats, do the following:

1. Place the Child Restraint System on a rear seat and route the lap/shoulder belt around or through the Child Restraint System, following the Child Restraint System manufacturer's instructions.
   Make sure the seat belt webbing is not twisted.



2. Fasten the lap/shoulder belt latch into the buckle. Listen for the distinct "click" sound. Position the release button so that it is easy to access in case of an emergency.

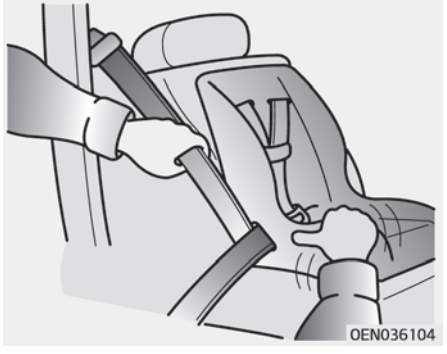

3. Remove as much slack from the belt as possible by pushing down on the Child Restraint System while feeding the shoulder belt back into the retractor.
4. Push and pull on the Child Restraint System to confirm that the seat belt is holding it firmly in place.

If your Child Restraint System manufacturer recommends the use of a top-tether with the lap/shoulder belt, see "Securing a Child Restraint System seat with "Top-tether Anchorage" system (if equipped)" on page 3-36.
To remove the Child Restraint System, press the release button on the buckle and then pull the lap/shoulder belt out of the Child Restraint System and allow the seat belt to retract fully.

Child seat restraint suitability for seat position using the seat belt

Suitability of each seating position for "universal" category belted Child Restraint Systems according to ECE regulations

Use Child Restraint Systems that have been officially approved and are appropriate for your children. When using the Child Restraint Systems, refer to the following table.

Mass Group		Seating Position				
		Front Passenger Outboard	Second Row			
			Outboard Left	Center (3 POINT BELT)	Center (2 POINT BELT)	Outboard Right
Group 0 (0-9 months)	up to 10 kg	U	U	U	UF	U
Group 0 + (0-2 years)	up to 13 kg	U	U	U	UF	U
Group I (9 months-4 years)	9 to 18 kg	U	U	U	UF	U
Group II (15 to 25 kg)	15 to 25 kg	U	U	X	UF	U
Group III (22 to 36 kg)	22 to 36 kg	U	U	X	UF	U

U = Suitable for "universal" category Child Restraint Systems approved for this mass group. For front passenger seat: suitable with seat back angle fully forward.
UF = Suitable for forward facing "universal" category restraints approved for use in this mass group.
L = Suitable for particular child restraints given on attached list. These restraints may be of the "specific vehicle", "restricted" or "semi-universal" categories.
B = Built-in restraint approved for this mass group.
X = Seat position not suitable for children in this mass group.

Recommended child restraint systems - For Europe

Mass Group	Size Class	Fixture	Name	Manufacturer	Type of Fixation	ECE-R44 Approval No.
Group 0-1 (0 ~ 13 kg)	E	ISO/R1	Baby Safe Plus	Britax Römer	Rearward-facing with ISOFIX Base	E1 04301146
Group 1 (9 ~ 18 kg)	B1	ISO/F2X	Duo Plus	Britax Römer	Forward-facing with ISOFIX and top-tether	E1 04301133

CRS Manufacturer information

Britax Römer http://www.britax.com

AIR BAG - SUPPLEMENTAL RESTRAINT SYSTEM (IF EQUIPPED)

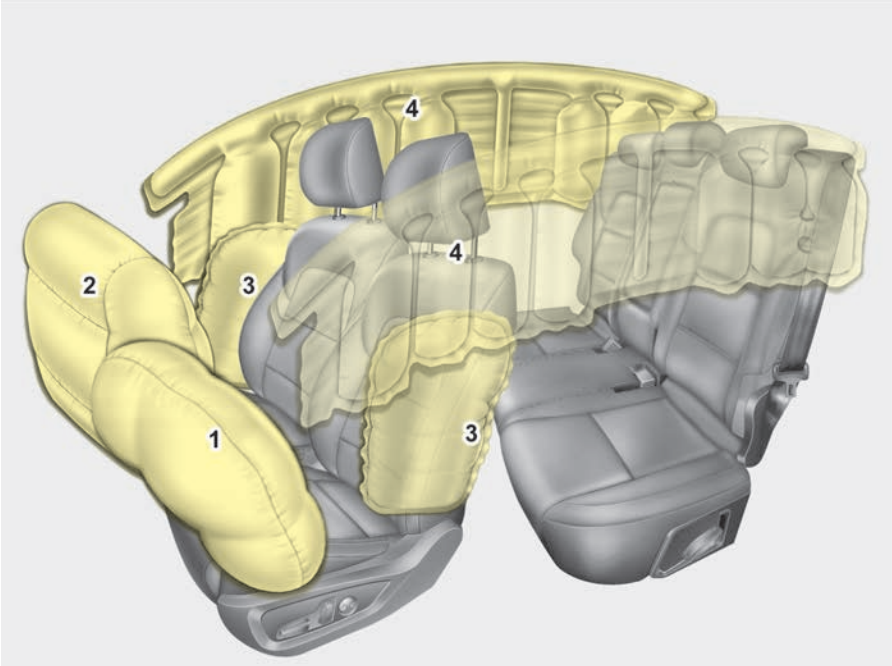

❉ The actual air bags in the vehicle may differ from the illustration.

OQL035085

1. Driver's front air bag
2. Passenger's front air bag*
3. Side air bag*
4. Curtain air bag*

⚠ WARNING

- **Even in vehicles with air bags, you and your passengers must always wear the safety belts provided in order to minimize the risk and severity of injury in the event of a collision or rollover.**
- **SRS and pretensioners contain explosive chemicals.**
  If scraping a vehicle without removing SRS and pretensioners from a vehicle, it may cause fire. Before scraping a vehicle, contact a professional workshop. Kia recommends to visit an authorized Kia dealer/service partner.

(Continued)

*: if equipped

(Continued)

- **Keep the SRS parts and wirings away from water or any liquid. If the SRS components are inoperative due to exposure to water or liquids, it may cause fire or severe injury.**

How does the air bag system operate

- Air bags are activated (able to inflate if necessary) only when the ignition switch is turned to the ON or START position.
- Air bags inflate instantly in the event of a serious frontal collision or side collision (if equipped with a side air bag or curtain air bag) in order to help protect the occupants from serious physical injury.

✻ NOTICE

■ if equipped with rollover sensor

(Continued)

(Continued)

Also, the air bags inflate instantly in the event of a rollover (if equipped with a side air bag or curtain air bag) in order to help protect the occupants from serious physical injury.

- There is no single speed at which the air bags will inflate.
  Generally, air bags are designed to inflate based upon the severity of a collision and its direction. These two factors determine whether the sensors produce an electronic deployment/ inflation signal.
- Air bag deployment depends on a number of factors including vehicle speed, angles of impact and the density and stiffness of the vehicles or objects which your vehicle hits in the collision. The determining factors are not limited to those mentioned above.
- The front air bags will completely inflate and deflate in an instant.
  It is virtually impossible for you to see the air bags inflate during an accident.
  It is much more likely that you will simply see the deflated air bags hanging out of their storage compartments after the collision.
- In order to help provide protection in a severe collision, the air bags must inflate rapidly. The speed of the air bag inflation is a consequence of extremely short time in which a collision occurs and the need to inflate the air bag between the occupant and the vehicle structures before the occupant impacts those structures.
  This speed of inflation reduces the risk of serious or life-threatening injuries in a severe collision and is thus a necessary part of the air bag design.
  However, air bag inflation can also cause injuries which can include facial abrasions, bruises and broken bones because the inflation speed also causes the air bags to expand with a great deal of force.

- There are even circumstances under which contact with the steering wheel air bag can cause fatal injuries, especially if the occupant is positioned excessively close to the steering wheel.

⚠ WARNING

- **To avoid severe personal injury or death caused by deploying air bags in a collision, the driver should sit as far back from the steering wheel air bag as possible (at least 250 mm (10 inches) away). The front passengers should always move their seats as far back as possible and sit back in their seat.**
- **Air bags inflate instantly in the event of a collision, and passengers may be injured by the air bag expansion force if they are not in a proper position.**
- **Air bag inflation may cause injuries including facial or bodily abrasions, injuries from broken glasses or burns.**

Noise and smoke

When the air bags inflate, they make a loud noise and they leave smoke and powder in the air inside of the vehicle. This is normal and is a result of the ignition of the air bag inflator. After the air bag inflates, you may feel substantial discomfort in breathing due to the contact of your chest with both the seat belt and the air bag, as well as from breathing the smoke and powder. Open your doors and/or windows as soon as possible after the impact in order to reduce discomfort and prevent prolonged exposure to smoke and powder.

Though the smoke and powder are non-toxic, they may cause irritation to the skin (eyes, nose and throat, etc). If this is the case, wash and rinse with cold water immediately and consult a doctor if the symptom persists.

⚠ WARNING

When the air bags deploy, the air bag related parts in the steering wheel, instrument panel, front seats and/or in both sides of the roof rails

(Continued)

(Continued)

above the front and rear doors are very hot. To prevent injury, do not touch the air bag storage area's internal components immediately after an air bag has inflated.

Front passenger's air bag warning label for child restraint system

■ Type A



OYDESA2042

■ Type B



OHM036053L

⚠ WARNING

Never place a rear facing child restraint in the front passenger seat, unless the passenger-side air bag is deactivated. An inflating passenger-side air bag could impact the rear-facing child restraint and kill the child.

In addition, we recommend that you do not place front-facing child restraints in the front passenger's seat either. If the front passenger air bag inflates, it could cause serious or fatal injuries to the child.

⚠ WARNING

- **NEVER use a rearward facing child restraint on a seat protected by an ACTIVE AIR BAG in front of it, DEATH or SERIOUS INJURY to the CHILD can occur.**

(Continued)

(Continued)

- **When children are seated in the rear outboard seats of a vehicle equipped with side and/or curtain air bags, be sure to install the child restraint system as far away from the door side as possible, and securely lock the child restraint system in position.**
  Inflation of side and/or curtain air bags could cause serious injury or death to an infant or child.

Air bag warning light



The purpose of the air bag warning light in your instrument panel is to alert you of a potential problem with your air bag - Supplemental Restraint System (SRS).
When the ignition switch is turned ON, the warning light should illuminate for approximately 6 seconds, then go off.
Have the system checked if:

- The light does not turn on briefly when you turn the ignition ON.
- The light stays on after illuminating for approximately 6 seconds.
- The light comes on while the vehicle is in motion.
- The light blinks when the ignition switch is in ON position.

SRS components and functions

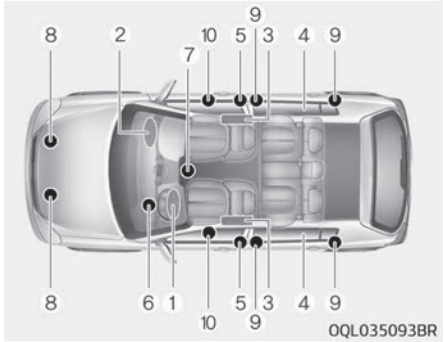

The SRS consists of the following components:

1. Driver's front air bag module
2. Passenger's front air bag module*
3. Side air bag modules*
4. Curtain air bag modules*
5. Retractor pre-tensioner assemblies*
6. Air bag warning light
7. SRS control module (SRSCM) / Rollover sensor*
8. Front impact sensors
9. Side impact sensors*
10. Side pressure sensors*

*: if equipped

The SRSCM continually monitors all SRS components while the ignition switch is ON to determine if a crash impact is severe enough to require air bag deployment or pre-tensioner seat belt deployment.
The SRS air bag warning light on the instrument panel will illuminate for about 6 seconds after the ignition switch is turned to the ON position, after which the SRS air bag warning light should go out.

⚠ WARNING

If any of the following conditions occurs, this indicates a malfunction of the SRS. We recommend that the system be inspected by an authorized Kia dealer.

(Continued)

*: if equipped

(Continued)

- **The light does not turn on briefly when you turn the ignition ON.**
- **The light stays on after illuminating for approximately 6 seconds.**
- **The light comes on while the vehicle is in motion.**
- **The light blinks when the ignition switch is in the ON position.**

Driver's front air bag (1)

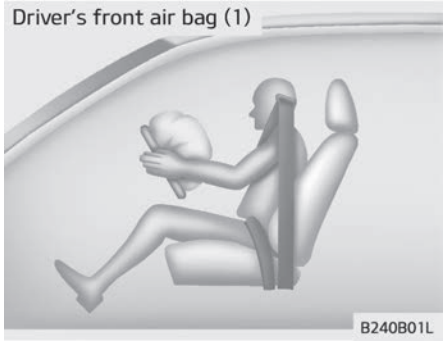

The front air bag modules are located both in the center of the steering wheel and in the front passenger's panel above the glove box. When the SRSCM detects a sufficiently severe impact to the front of the vehicle, it will automatically deploy the front air bags.

Driver's front air bag (2)

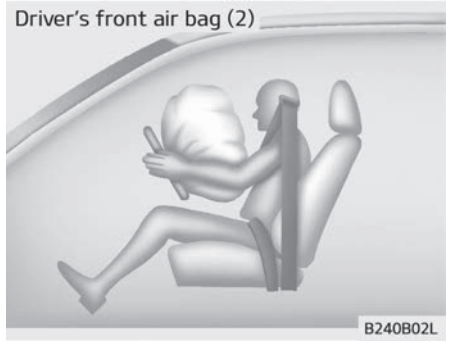

Upon deployment, tear seams molded directly into the pad covers will separate under pressure from the expansion of the air bags. Further opening of the covers then allows full inflation of the air bags.

Driver's front air bag (3)

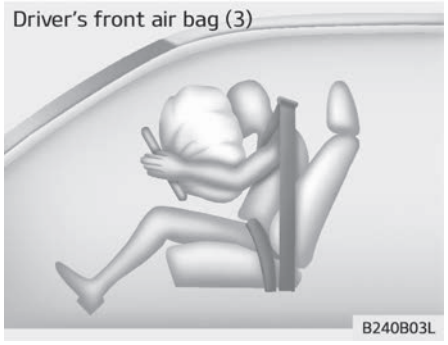

Passenger's front air bag (if equipped)

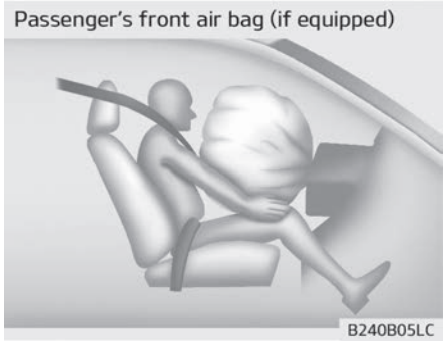

A fully inflated air bag, in combination with a properly worn seat belt, slows the driver's or the passenger's forward motion, reducing the risk of head and chest injury.
After complete inflation, the air bag immediately starts deflating, enabling the driver to maintain forward visibility and the ability to steer or operate other controls.

⚠ WARNING

- **Do not install or place any accessories (drink holder, sticker, etc.) on the front passenger's panel above the glove box in a vehicle with a passenger's air bag. Such objects may become dangerous projectiles and cause injury if the passenger's air bag inflates.**

(Continued)

(Continued)

- **When installing a container of liquid air freshener inside the vehicle, do not place it near the instrument cluster nor on the instrument panel surface.**
  It may become a dangerous projectile and cause injury if the passenger's air bag inflates.

⚠ WARNING

- **If an air bag deploys, there may be a loud noise followed by a fine dust released in the vehicle. These conditions are normal and are not hazardous - the air bags are packed in this fine powder. The dust generated during air bag deployment may cause skin or eye irritation as well as aggravate asthma for some persons. Always wash all exposed skin areas thoroughly with cold water and mild soap after an accident in which the air bags were deployed.**

(Continued)

(Continued)

- **The SRS can function only when the ignition key is in the ON position. If the SRS air bag warning light does not illuminate, or continuously remains on after illuminating for about 6 seconds when the ignition key is turned to the ON position, or after the engine is started, comes on while driving, the SRS is not working properly. In this case, have the system inspected by a professional workshop. Kia recommends to visit an authorized Kia dealer/service partner.**
- **Before you replace a fuse or disconnect a battery terminal, turn the ignition switch to the LOCK position and remove the ignition key. Never remove or replace the air bag related fuse(s) when the ignition switch is in the ON position. Failure to heed this warning will cause the SRS air bag warning light to illuminate.**

Driver's and passenger's front air bag

■ Driver's front air bag



OQL038038LB

■ Passenger's front air bag (if equipped)

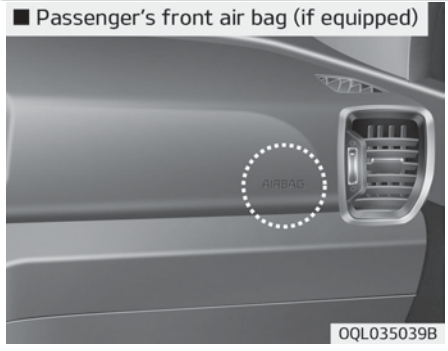

OQL035039B

Your vehicle is equipped with a Supplemental Restraint (Air Bag) System and lap/shoulder belts at both the driver and passenger seating positions.
The indicators of the system's presence are the letters "AIR BAG" located on the air bag pad cover on the steering wheel and the passenger's side front panel pad above the glove box.
The SRS consists of air bags installed under the pad covers in the center of the steering wheel and the passenger's side in the front panel above the glove box.
The purpose of the SRS is to provide the vehicle's driver and/or the front passenger with additional protection than that offered by the seat belt system alone in case of a frontal impact of sufficient severity. The SRS uses sensors to gather information about the driver's seat position, the driver's and front passenger's seat belt usage and impact severity.

⚠ WARNING

Always use seat belts and child restraints – every trip, every time, ev-

(Continued)

(Continued)

eryone! Air bags inflate with considerable force and in the blink of an eye. Seat belts help keep occupants in proper position to obtain maximum benefit from the air bag. Even with air bags, improperly and unbelted occupants can be severely injured when the air bag inflates. Always follow the precautions about seat belts, air bags and occupant safety contained in this manual.
To reduce the chance of serious or fatal injuries and receive the maximum safety benefit from your restraint system:

- **Never place a child in any child or booster seat in the front seat.**
- **ABC – Always Buckle Children in the 2nd row seat. It is the safest place for children of any age to ride.**
- **Front and side air bags can injure occupants improperly positioned in the front seats.**

(Continued)

(Continued)

- **Move your seat as far back as practical from the front air bags, while still maintaining control of the vehicle.**
- **You and your passengers should never sit or lean unnecessarily close to the air bags. Improperly positioned drivers and passengers can be severely injured by inflating air bags.**
- **Never lean against the door or center console – always sit in an upright position.**
- **Do not allow a passenger to ride in the front seat when the passenger's front air bag OFF indicator is illuminated, because the air bag will not deploy in the event of a moderate or severe frontal crash.**

(Continued)

(Continued)

- **No objects should be placed over or near the air bag modules on the steering wheel, instrument panel or the front passenger's panel above the glove box, because any such object could cause harm if the vehicle is in a crash severe enough to cause the air bags to deploy.**
- **Do not tamper with or disconnect SRS wiring or other components of the SRS system. Doing so could result in injury, due to accidental deployment of the air bags or by rendering the SRS inoperative.**
- **If the SRS air bag warning light remains illuminated while the vehicle is being driven, have the system inspected by a professional workshop. Kia recommends to visit an authorized Kia dealer/service partner.**

(Continued)

(Continued)

- Air bags can only be used once – have the system replaced by a professional workshop.
  Kia recommends to visit an authorized Kia dealer/service partner.
- The SRS is designed to deploy the front air bags only when an impact is sufficiently severe. Additionally, the air bags will only deploy once. Seat belts must be worn at all times.
- Front air bags are not intended to deploy in side-impact, rear-impact or rollover crashes. However, when frontal deployment threshold is satisfied at side-impact, front air bags may deploy. In addition, front air bags will not deploy in frontal crashes below the deployment threshold.
- A child restraint system must never be placed in the front seat. The infant or child could be severely injured or killed by an air bag deployment in case of an accident.

(Continued)

(Continued)

- Children age 12 and under must always be properly restrained in the rear seat. If a child over 12 must be seated in the front seat, he or she must be properly belted and the seat should be moved as far back as possible.
- For maximum safety protection in all types of crashes, all occupants including the driver should always wear their seat belts whether or not an air bag is also provided at their seating position to minimize the risk of severe injury or death in the event of a crash.
  Do not sit or lean unnecessarily close to the air bag while the vehicle is in motion.
- Sitting improperly or out of position can result in serious or fatal injury in a crash. All occupants should sit upright with the seat back in an upright position, centered on the seat cushion with their seat belt on, legs comfortably extended and their feet on the floor until the vehicle is parked and the ignition key is removed.

(Continued)

(Continued)

- The SRS air bag system must deploy very rapidly to provide protection in a crash. If an occupant is out of position because of not wearing a seat belt, the air bag may forcefully contact the occupant causing serious or fatal injuries.

⚠ WARNING

■ No attaching objects

No objects (such as crash pad cover, cellular phone holder, cup holder, perfume or stickers) should be placed over or near the air bag modules on the steering wheel, instrument panel, windshield glass, and the front passenger's panel above the glove box. Such objects could cause harm if the vehicle is in a crash severe enough to cause the air bags to deploy. Do not place any objects over the air bag or between the air bag and yourself.

Side air bag (if equipped)

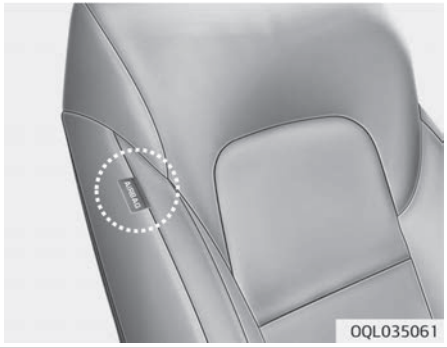

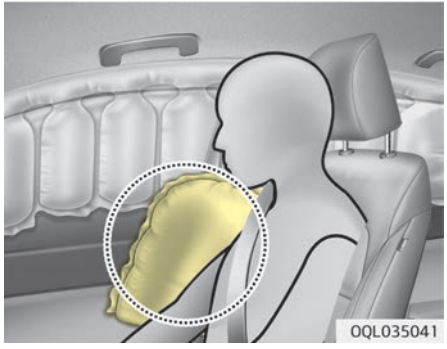

✻ The actual air bags in the vehicle may differ from the illustration.

Your vehicle is equipped with a side air bag in each front seat.
The purpose of the air bag is to provide the vehicle's driver and/or the front passenger with additional protection than that offered by the seat belt alone.
The side air bags are designed to deploy during certain side-impact collisions, depending on the crash severity of impact. However, when side deployment threshold is satisfied at front-impact, side air bags may deploy. The side air bags are not designed to deploy in all side impact or rollover situations.
The side air bags may deploy on the side of the impact.

✻ NOTICE

■ if equipped with rollover sensor

- Also, both sides of the side air bags deploy in certain rollover situations.
- The side air bag may deploy when the rollover sensor detects the situation as a rollover.

⚠ WARNING

Do not allow the passengers to lean their heads or bodies onto doors, put their arms on the doors, stretch their arms out of the window, or place objects between the doors and passengers when they are seated on seats equipped with side and/or curtain air bags.

⚠ WARNING

- **The side air bag is supplemental to the driver's and the passenger's seat belt systems and is not a substitute for them. Therefore your seat belts must be worn at all times while the vehicle is in motion. The air bags deploy only in certain side impact or rollover* conditions severe enough to cause significant injury to the vehicle occupants.**

(Continued)

*: Only vehicle equipped with rollover sensor.

(Continued)

- **For best protection from the side air bag system and to avoid being injured by the deploying side air bag, both front seat occupants should sit in an upright position with the seat belt properly fastened. The driver's hands should be placed on the steering wheel at the 9:00 and 3:00 positions. The passenger's arms and hands should be placed on their laps.**
- **Do not use any accessory seat covers.**
- **Use of seat covers could reduce or prevent the effectiveness of the system.**
- **To prevent unexpected deployment of the side air bag that may result in personal injury, avoid impact to the side impact sensor when the ignition switch is on.**
- **If the seat or seat cover is damaged, have the system serviced by a professional workshop. Kia recommends to visit an authorized Kia dealer/service partner.**

⚠ WARNING

■ No attaching objects

- **Do not place any objects over the air bag or between the air bag and yourself. Also, do not attach any objects around the area the air bag inflates such as the door, side door glass, front and rear pillar.**
- **Do not place any objects between the door and the seat. They may become dangerous projectiles if the side air bag inflates.**
- **Do not install any accessories on the side or near the side air bags.**

Curtain air bag (if equipped)



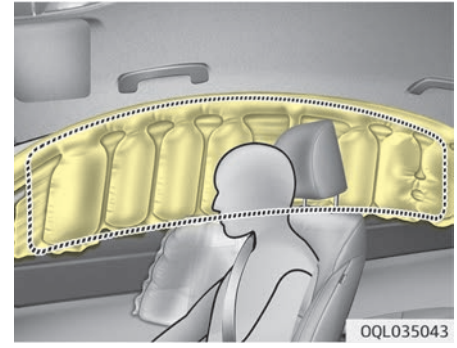

✻ The actual air bags in the vehicle may differ from the illustration.

Curtain air bags are located along both sides of the roof rails above the front and rear doors.
They are designed to help protect the heads of the front seat occupants and the rear outboard seat occupants in certain side impact collisions.
The curtain air bags are designed to deploy during certain side impact collisions depending on the crash severity of impact. However, when the side deployment threshold is satisfied at front-impact, curtain air bags may deploy.
The curtain air bags may deploy on the side of the impact.
The curtain air bags are not designed to deploy in all side impacts or rollover situations.

✻ NOTICE

■ if equipped with rollover sensor

- Also, both sides of the curtain air bags deploy in certain rollover situations.

(Continued)

(Continued)

- The curtain air bag may deploy when the rollover sensor detects the situation as a rollover.

⚠ WARNING

- **In order for side and curtain air bags to provide the best protection, front seat occupants and outboard rear occupants should sit in an upright position with the seat belts properly fastened. Importantly, children should sit in a proper child restraint system in the rear seat.**
- **When children are seated in the rear outboard seats, they must be seated in the proper child restraint system. Make sure to position the child restraint system as far away from the door side as possible, and secure the child restraint system in a locked position.**

(Continued)

(Continued)

- **Do not allow the passengers to lean their heads or bodies against doors, put their arms on the doors, stretch their arms out of the window or place objects between the doors and passengers when they are seated on seats equipped with side and curtain air bags.**
- **Never try to open or repair any components of the side curtain air bag system. If necessary, have the system serviced by a professional workshop. Kia recommends to visit an authorized Kia dealer/service partner.**

Failure to follow the above instructions can result in injury or death to the vehicle occupants in an accident.

⚠ WARNING

■ **No attaching objects**

(Continued)

(Continued)

- **Do not place any objects over the air bag. Also, do not attach any objects around the area the air bag inflates such as the door, side door glass, front and rear pillar, roof side rail.**
- **Do not hang hard or breakable objects on the clothes hanger.**

Why didn't my air bag go off in a collision?

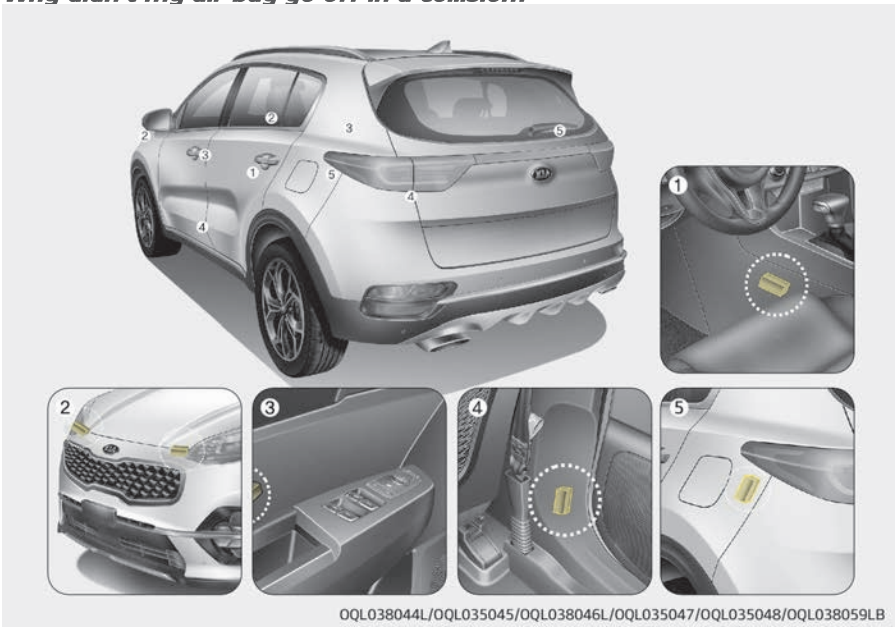

OQL038044L/OQL035045/OQL038046L/OQL035047/OQL035048/OQL038059LB

Inflation and non-inflation conditions of the air bag

There are many types of accidents in which the air bag would not be expected to provide additional protection. These include rear impacts, second or third collisions in multiple impact accidents, as well as low speed impacts.

Air bag collision sensors

1. SRS control module / Rollover sensor (if equipped)
2. Front impact sensor
3. Side pressure sensor (if equipped)
4. Side impact sensor (if equipped)
5. Side impact sensor (if equipped)

✻ The actual air bag collision sensors in the vehicle may differ from the illustration.

⚠ WARNING

- **Do not hit or allow any objects to impact the locations where air bag or sensors are installed. This may cause unexpected air bag deployment, which could result in serious personal injury or death.**
- **If the installation location or angle of the sensors is altered in any way, the air bags may deploy when they should not or they may not deploy when they should, causing severe injury or death. Therefore, do not try to perform maintenance on or around the air bag sensors. Have the system serviced by a professional workshop. Kia recommends to visit an authorized Kia dealer/service partner.**

(Continued)

(Continued)

- **Problems may arise if the sensor installation angles are changed due to the deformation of the front bumper, body or front door and B/C pillars where side collision sensors are installed. In this case, have the system serviced by a professional workshop. Kia recommends to visit an authorized Kia dealer/service partner.**
- **Your vehicle has been designed to absorb impact and deploy the air bag(s) in certain collisions. Installing bumper guards or replacing a bumper with non-genuine parts may adversely affect your vehicles collision and air bag deployment performance.**

⚠ WARNING

■ if equipped with rollover sensor

If your vehicle is equipped with side and curtain air bag, set the ignition

(Continued)

(Continued)

switch to OFF or ACC position when the vehicle is being towed.
The side and curtain air bag may deploy when the ignition is ON, and the rollover sensor detects the situation as a rollover.

Air bag inflation conditions

Front air bags



Front air bags are designed to inflate in a frontal collision depending on the severity of impact of the front collision.

Side and curtain air bags (if equipped)

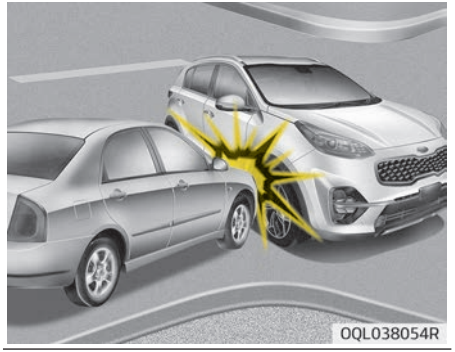

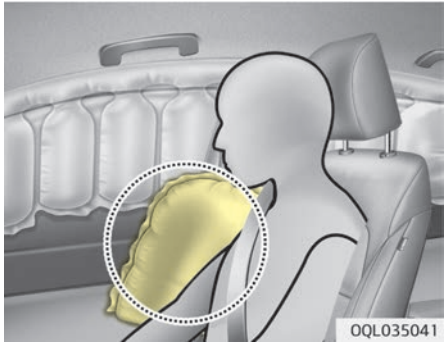

❊ The actual air bags in the vehicle may differ from the illustration.

Side and curtain air bags are designed to inflate when an impact is detected by side collision sensors depending on the severity of impact resulting from a side impact collision.
Although the front air bags (driver's and front passenger's air bags) are designed to inflate only in frontal collisions, they also may inflate in other types of collisions if the front impact sensors detect a sufficient impact. Side air bags (side and/or curtain air bags) are designed to inflate only in side impact collisions, but they may inflate in other collisions if the side impact sensors detect a sufficient impact.
If the vehicle chassis is impacted by bumps or objects on unimproved roads or sidewalks, air bags may deploy. Drive carefully on unimproved roads or on surfaces not designed for vehicle traffic to prevent unintended air bag deployment.

❊ NOTICE

■ if equipped with a rollover sensor

(Continued)

(Continued)

Also, the side and curtain air bags are designed to inflate when a rollover is detected by a rollover sensor.

Air bag non-inflation conditions



- In certain low-speed collisions the air bags may not deploy. The air bags are designed not to deploy in such cases because they may not provide benefits beyond the protection of the seat belts in such collisions.



- Air bags are not designed to inflate in rear collisions, because occupants are moved backward by the force of the impact. In this case, inflated air bags would not be able to provide any additional benefit.



- Front air bags may not inflate in side impact collisions, because occupants move to the direction of the collision, and thus in side impacts, front air bag deployment would not provide additional occupant protection.

- However, if equipped with side and curtain air bags, the air bags may inflate depending on the severity of impact.

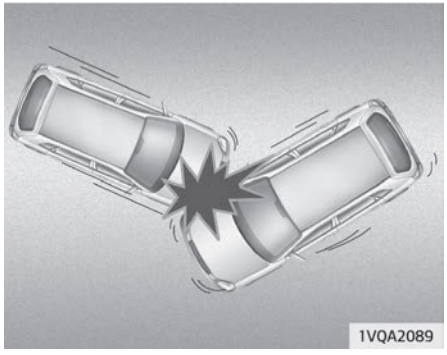

- In an angled collision, the force of impact may direct the occupants in a direction where the air bags would not be able to provide any additional benefit, and thus the sensors may not deploy any air bags.

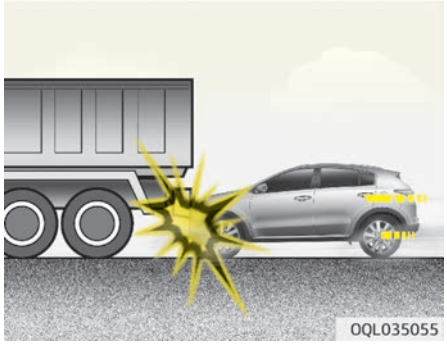

- Just before impact, drivers often brake heavily. Such heavy braking lowers the front portion of the vehicle causing it to “ride” under a vehicle with a higher ground clearance. Air bags may not inflate in this "under-ride" situation because deceleration forces that are detected by sensors may be significantly reduced by such “under-ride” collisions.

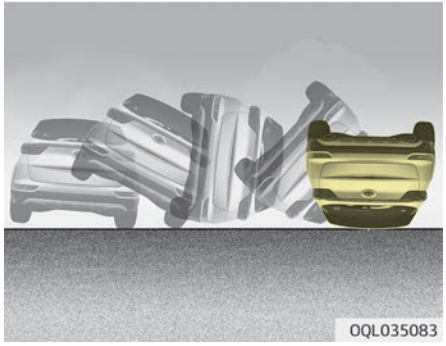

- Front air bags may not inflate in rollover accidents because front air bag deployment would not provide additional occupant protection.

✻ NOTICE

■ without rollover sensor

However, side and/or curtain air bags may inflate when the vehicle is rolled over by a side impact collision, if the vehicle is equipped with side air bags and curtain air bags.

✻ NOTICE

■ if equipped with rollover sensor

However, if equipped with side and curtain air bags, the air bags may inflate in a rollover, when it is detected by the rollover sensor.

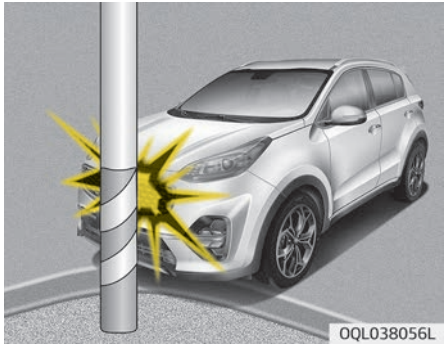

- Air bags may not inflate if the vehicle collides with objects such as utility poles or trees, where the point of impact is concentrated to one area and the full force of the impact is not delivered to the sensors.

SRS Care

The SRS is virtually maintenance-free and so there are no parts you can safely service by yourself. If the SRS air bag warning light blinks or does not illuminate when the ignition switch is turned to the ON position, or if it illuminates while the vehicle is being driven, have the system inspected by a professional workshop. Kia recommends to visit an authorized Kia dealer/service partner.

⚠ WARNING

- **Modification to SRS components or wiring, including the addition of any kind of badges to the pad covers or modifications to the body structure, can adversely affect SRS performance and lead to possible injury.**
- **For cleaning the air bag pad covers, use only a soft, dry cloth or one which has been moistened with plain water. Solvents or cleaners could adversely affect the air bag covers and proper deployment of the system.**

(Continued)

(Continued)

- **No objects should be placed over or near the air bag modules on the steering wheel, instrument panel, and the front passenger's panel above the glove box, because any such object could cause harm if the vehicle is in a crash severe enough to cause the air bags to inflate.**
- **If the air bags inflate, have the system replaced by a professional workshop.**
  Kia recommends to visit an authorized Kia dealer/service partner.
- **Do not tamper with or disconnect SRS wiring, or other components of the SRS system. Doing so could result in injury, due to accidental inflation of the air bags or by rendering the SRS inoperative.**

(Continued)

(Continued)

- **If components of the air bag system must be discarded, or if the vehicle must be scrapped, certain safety precautions must be observed. An authorized Kia dealer knows these precautions and can give you the necessary information. Failure to follow these precautions and procedures could increase the risk of personal injury.**
- **If your car was flooded and has soaked carpeting or water on flooring, you shouldn't try to start the engine; in this case, have your vehicle inspected by a professional workshop. Kia recommends to contact an authorized Kia dealer/service partner.**

Additional safety precautions

- Never let passengers ride in the cargo area or on top of a folded-down back seat. All occupants should sit upright, fully back in their seats with their seat belts on and their feet on the floor.

- **Passengers should not move out of or change seats while the vehicle is moving.** A passenger who is not wearing a seat belt during a crash or emergency stop can be thrown against the inside of the vehicle, against other occupants, or out of the vehicle.
- **Each seat belt is designed to restrain one occupant.** If more than one person uses the same seat belt, they could be seriously injured or killed in a collision.
- **Do not use any accessories on seat belts.** Devices claiming to improve occupant comfort or reposition the seat belt can reduce the protection provided by the seat belt and increase the chance of serious injury in a crash.
- **Passengers should not place hard or sharp objects between themselves and the air bags.** Carrying hard or sharp objects on your lap or in your mouth can result in injuries if an air bag inflates.
- **Keep occupants away from the air bag covers.** All occupants should sit upright, fully back in their seats with their seat belts on and their feet on the floor. If occupants are too close to the air bag covers, they could be injured if the air bags inflate.
- **Do not attach or place objects on or near the air bag covers.** Any object attached to or placed on the front or side air bag covers could interfere with the proper operation of the air bags.
- **Do not modify the front seats.** Modification of the front seats could interfere with the operation of the supplemental restraint system sensing components or side air bags.
- **Do not place items under the front seats.** Placing items under the front seats could interfere with the operation of the supplemental restraint system sensing components and wiring harnesses.
- **Never hold an infant or child on your lap.** The infant or child could be seriously injured or killed in the event of a crash. All infants and children should be properly restrained in appropriate child safety seats or seat belts in the rear seat.

⚠ WARNING

- **Sitting improperly or out of position can cause occupants to be shifted too close to a deploying air bag, strike the interior structure or be thrown from the vehicle resulting in serious injury or death.**
- **Always sit upright with the seatback in an upright position, centered on the seat cushion with your seat belt on, legs comfortably extended and your feet on the floor.**

Adding equipment to or modifying your air bag-equipped vehicle

If you modify your vehicle by changing your vehicle's frame, bumper system, front end or side sheet metal or ride height, this may affect the operation of your vehicle's air bag system.

Air bag warning label

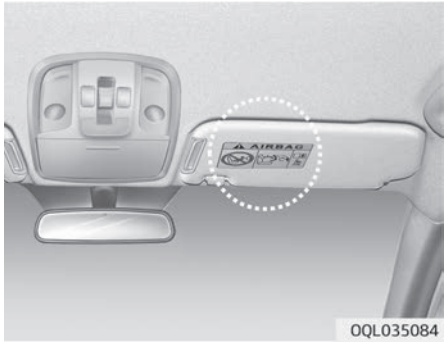

Air bag warning labels are attached to alert the passengers of the potential risk of the air bag system.
Note that these government warnings focus on the risk of children. We also want you to be aware of the risks which adults are exposed to and that have been described in “Additional safety precautions” on page 3-61.

Features of your vehicle

Keys....4-04
Record your key number....4-04
Key operations....4-04
Immobilizer system....4-05
Remote keyless entry....4-07
Remote keyless entry system operations....4-07
Smart key system operation....4-07
Transmitter precautions....4-09
Battery replacement....4-10
Theft-alarm system....4-12
Armed stage....4-12
Theft-alarm stage....4-13
Disarmed stage....4-13
Door locks....4-15
Operating door locks from outside the vehicle....4-15
Operating door locks from inside the vehicle....4-16
Door lock/unlock features....4-18
Child-protector rear door locks....4-18
Tailgate....4-19
Non-power tailgate....4-19
Power tailgate....4-20
Smart Tailgate....4-25
Emergency tailgate safety release....4-28
Windows....4-30
Power windows....4-30
Hood....4-35
Opening the hood....4-35
Closing the hood....4-36
Fuel filler lid....4-37
Opening the fuel filler lid....4-37
Closing the fuel filler lid....4-37
Panorama sunroof....4-40
Sunroof open warning....4-41
Sunshade....4-41
Sliding the sunroof....4-42
Tilting the sunroof....4-42
Closing the sunroof....4-43
Resetting the sunroof....4-44
Steering wheel....4-45
Electronic power steering....4-45
Tilt & telescopic steering....4-46
Heated steering wheel....4-47
Horn....4-47
Mirrors....4-49
Inside rearview mirror....4-49
Outside rearview mirror....4-50
Instrument cluster....4-53
Instrument cluster control....4-54
LCD display control....4-55
Gauges....4-56
Transaxle shift indicator....4-59
LCD display....4-61
LCD modes....4-61
Distance to empty....4-64
Trip modes (trip computer)....4-64
User settings mode....4-67
Warning messages....4-70
Warning and indicator lights....4-74
Warning lights....4-74
Indicator lights....4-81

Parking distance warning-reverse 4-86
Operation of the parking distance warning-reverse..... 4-86
Non-operational conditions of parking distance warning - reverse..... 4-87
Parking distance warning - reverse precautions..... 4-88
Self-diagnosis..... 4-88
Parking distance warning 4-89
Operation of the parking distance warning - forward.... 4-89
Non-operational conditions of parking distance warning - forward..... 4-92
Self-diagnosis..... 4-94
Rearview monitor 4-95
Lighting..... 4-96
Battery saver function..... 4-96
Headlight escort function 4-96
Daytime running light 4-96
Lighting control..... 4-97
High beam operation..... 4-99
Turn signals and lane change signals..... 4-100
Front fog light 4-101
Rear fog light 4-101
Headlight leveling device 4-102
High beam assist 4-103
Warning light and message..... 4-103
Wipers and washers..... 4-106
Windshield wipers..... 4-106
Windshield washers..... 4-108
Rear window wiper and washer switch..... 4-109
Interior light..... 4-110
Automatic turn off function 4-110
Map lamp..... 4-110
Room lamp..... 4-111
Tailgate room lamp..... 4-111
Glove box lamp 4-112
Vanity mirror lamp 4-112
Welcome system 4-113
Welcome light 4-113
Escort welcome 4-113
Interior light..... 4-113
Defroster..... 4-114
Rear window defroster..... 4-114
Climate control system..... 4-115
System operation..... 4-115
Air conditioning..... 4-115
Climate control air filter..... 4-117
Air conditioning refrigerant label..... 4-117
Checking the amount of air conditioner refrigerant and compressor lubricant..... 4-118
Manual climate control system 4-119
Automatic climate control system 4-125
Windshield defrosting and defogging..... 4-135
Manual climate control system..... 4-135
Automatic climate control system..... 4-135
Operation tips..... 4-136
Defogging logic 4-136
Auto defogging system (only for automatic climate control system)..... 4-137
Clean air 4-139
Storage compartment..... 4-140
Center console storage..... 4-140

Glove box....4-140
Sunglass holder....4-141
Luggage box....4-141
Interior features....4-142
Cigarette lighter....4-142
Ashtray....4-142
Cup holder....4-143
Sunvisor....4-144
Seat warmer....4-145
Air ventilation seat....4-147
Power outlet....4-147
USB charger....4-149
Wireless smart phone charging system....4-149
Clothes hanger....4-151
Floor mat anchor(s)....4-152
Luggage net holder....4-153
Cargo security screen....4-153
Exterior features....4-155
Roof rack....4-155

KEYS

Record your key number



The key code number is stamped on the key code tag attached to the key set.

Should you lose your keys Kia recommends to contact an authorized Kia dealer/service partner. Remove the key code tag and store it in a safe place. Also, record the key code number and keep it in a safe place (not in the vehicle).

Key operations

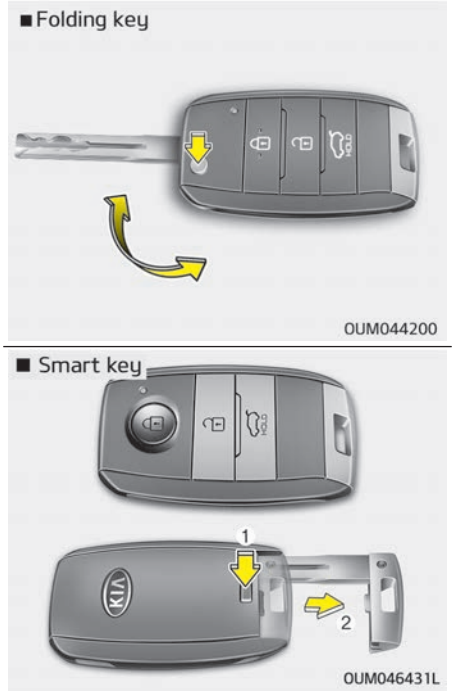

- Used to start the engine.
- Used to lock and unlock the doors.

Folding key

To unfold the key, press the release button then the key will unfold automatically.
To fold the key, fold the key manually while pressing the release button.

⚠ CAUTION

Do not fold the key without pressing the release button. This may damage the key.

Smart key

To remove the mechanical key, press and hold the release button (1) and remove the mechanical key (2).
To reinstall the mechanical key, put the key into the hole and push it until a click sound is heard.

⚠ WARNING

■ Ignition key (smart key)

Leaving children unattended in a vehicle with the ignition key (smart key) is dangerous even if the key is

(Continued)

(Continued)

not in the ignition or start button is in the ACC or ON position. Children copy adults and they could place the key in the ignition or press the start button. The ignition key (smart key) would enable children to operate power windows or other controls, or even make the vehicle move, which could result in serious bodily injury or even death. Never leave the keys in your vehicle with unsupervised children, when the engine is running.

⚠ WARNING

Kia recommends to use parts for replacement from an authorized Kia dealer/service partner. If an aftermarket key is used, the ignition switch may not return to ON after START. If this happens, the starter will continue to operate causing damage to the starter motor and possible fire due to excessive current in the wiring.

Immobilizer system (if equipped)

Your vehicle may be equipped with an electronic engine immobilizer system to reduce the risk of unauthorized vehicle use.

Your immobilizer system is comprised of a small transponder in the ignition key and electronic devices inside the vehicle.

With the immobilizer system, whenever you insert your ignition key into the ignition switch and turn it to ON or whenever the engine start/stop button is changed to the ON position, it checks and determines and verifies if the ignition key is valid or not.

If the key is determined to be valid, the engine will start.

If the key is determined to be invalid, the engine will not start.

To activate the immobilizer system:

Turn the ignition key to the OFF position or change the engine start/stop button to the OFF position. The immobilizer system activates automatically. Without a valid ignition key for your vehicle, the engine will not start.

To deactivate the immobilizer system:

Insert the ignition key into the key cylinder and turn it to the ON position or change the engine start/stop button to the ON position.

⚠ WARNING

In order to prevent theft of your vehicle, do not leave spare keys anywhere in your vehicle. Your immobilizer password is a customer unique password and should be kept confidential. Do not leave this number anywhere in your vehicle.

✻ NOTICE

When starting the engine, do not use the key with other immobilizer keys around. Otherwise the engine may not start or may stop soon after it starts. Keep each key separately in order to avoid a starting malfunction.

⚠ CAUTION

Do not put metal accessories near the ignition switch. Metal accessories may interrupt the transponder signal and may prevent the engine from being started.

✻ NOTICE

If you need additional keys or lose your keys, Kia recommends to visit an authorized Kia dealer/service partner.

⚠ CAUTION

The transponder in your ignition key is an important part of the immobilizer system. It is designed to give years of trouble-free service, however you should avoid exposure to moisture, static electricity and rough handling. Immobilizer system malfunction could occur.

⚠ CAUTION

Do not change, alter or adjust the immobilizer system because it could cause the immobilizer system to malfunction. In this case, have the system serviced by a professional workshop. Kia recommends to visit an authorized Kia dealer/service partner.
Malfunctions caused by improper alterations, adjustments or modifications to the immobilizer system are not covered by your vehicle manufacturer warranty.

REMOTE KEYLESS ENTRY

Remote keyless entry system operations

■ Folding key



OUM046432LB

■ Smart Key



OUM046433LB

Lock (1)

All doors (and tailgate) are locked if the lock button is pressed.
If all doors (and tailgate) are closed, the hazard warning lights will blink once to indicate that all doors (and tailgate) are locked.

Unlock (2)

All doors (and tailgate) are unlocked if the unlock button is pressed.
The hazard warning lights will blink twice to indicate that all doors (and tailgate) are unlocked.
However, after pressing this button, the doors (and tailgate) will lock automatically unless you open any door within 30 seconds.

Tailgate unlock (3)

The tailgate is unlocked if the button is pressed for more than 1 second.
The hazard warning lights will blink twice to indicate that the tailgate is unlocked.
However, after pressing this button, the tailgate will lock automatically unless you open the tailgate within 30 seconds.
Also, once the tailgate is opened and then closed, the tailgate will lock automatically.

Smart key system operation (if equipped)



OXM043002

With a smart key, you can lock or unlock a door (and tailgate) and even start the engine without inserting the key.
The functions of the buttons on a smart key are similar to the remote keyless entry (refer to "Remote keyless entry" on page 4-07).
Carrying the smart key, you may lock and unlock the vehicle doors (and tailgate). Also, you may start the engine. Refer to the following for more details.

Locking

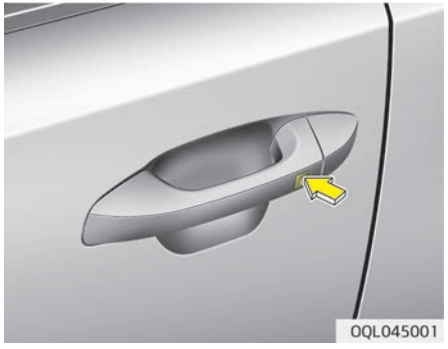

Pressing the button of the front outside door handles with all doors (and tailgate) closed and any door unlocked, locks all the doors (and tailgate). The hazard warning lights will blink once to indicate that all doors (and tailgate) are locked. The button will only operate when the smart key is within 0.7 ~ 1 m (28 ~ 39.3 in.) from the outside door handle. If you want to make sure that a door has locked or not, you should check the door lock button inside the vehicle or pull the outside door handle.
Even though you press the button, the doors will not lock and the chime sounds if any of the following occurs:

- The smart key is in the vehicle.
- The ENGINE START/STOP button is in the ACC or ON position.
- Any door except the tailgate is opened.

Unlocking

Pressing the button of the front outside door handles with all doors (and tailgate) closed and locked, unlocks all the doors (and tailgate). The hazard warning lights will blink twice to indicate that all doors (and tailgate) are unlocked. The button will only operate when the smart key is within 0.7 ~ 1 m (28 ~ 39.3 in.) from the outside door handle.
When the smart key is recognized in the area of 0.7 ~ 1 m (28 ~ 39.3 in.) from the front outside door handle, other people can also open a door without possession of the smart key.

Tailgate unlocking

If you are within 0.7 ~ 1 m (28 ~ 39.3 in.) from the outside tailgate handle, with your smart key in possession, the tailgate will unlock and open when you press the tailgate handle switch.
The hazard warning lights will blink twice to indicate that the tailgate is unlocked.
Also, once the tailgate is opened and then closed, the tailgate will lock automatically.

Start-up

You can start the engine without inserting the key. For detailed information refer to “Engine start/stop button (if equipped)” on page 6-13.

Restrictions in handling keys

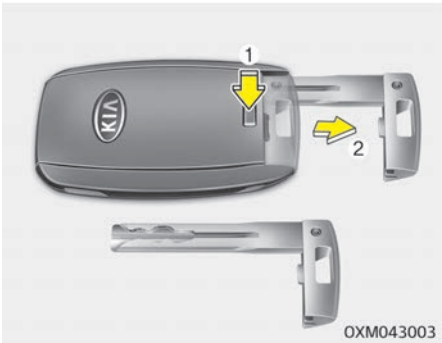

When leaving keys with parking lot and valet attendants, the following procedures will ensure that your vehicle's glove box compartment can not be opened in your absence.

1. Press and hold the release button (1) and remove the mechanical key (2).
2. Leave the smart key with the attendant. The glove box can not be opened without the mechanical key.

Transmitter precautions

The transmitter will not work if any of the following occurs:

- The ignition key is in the ignition switch (for folding key).
- Another vehicle's smart key is being operated close to your vehicle.
- You exceed the operating distance limit (about 10 m [30 feet]).
- The battery in the transmitter is weak.
- Other vehicles or objects may be blocking the signal.
- The weather is extremely cold.
- The transmitter is close to a radio transmitter such as a radio station or an airport which can interfere with normal operation of the transmitter.
- If the transmitter is in close proximity to your cell phone or smart phone, the signal from the transmitter could be blocked by normal operation of your cell phone or smart phone. This is especially important when the phone is active such as making call, receiving calls, text messaging, and/or sending/receiving emails.
  Avoid placing the transmitter and your cell phone or smart phone in the same pants or jacket pocket and maintain adequate distance between the two devices.

When the transmitter does not work correctly, open and close the door with the mechanical key. If you have a problem with the transmitter Kia recommends to contact an authorized Kia dealer/service partner.

⚠ CAUTION

Keep the transmitter away from water or any liquid. If the keyless entry system is inoperative due to exposure to water or other liquids, it will not be covered by your manufacturer's vehicle warranty.

⚠ CAUTION

Changes or modifications not expressly approved by the party responsible for compliance could void the user's authority to operate the equipment. If the keyless entry system is inoperative due to changes or modifications not expressly approved by the party responsible for compliance, it will not be covered by your manufacturer's vehicle warranty.

Battery replacement

■ Folding key

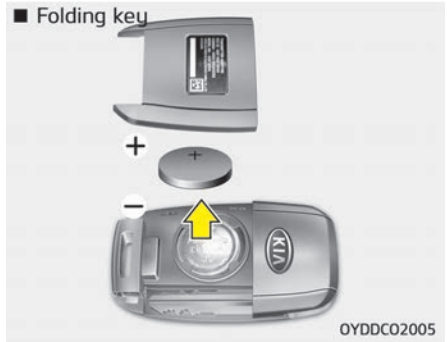

OYDDC02005

■ Smart Key

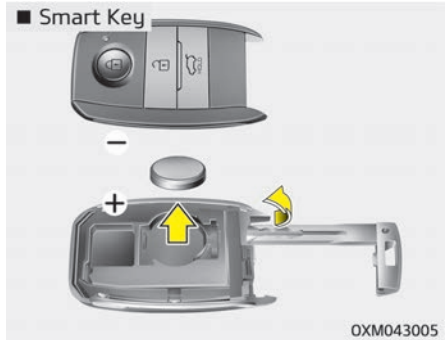

OXM043005

A transmitter uses a 3 volt lithium battery which will normally last for several years. When replacement is necessary, use the following procedure.

1. Insert a slim tool into the slot and gently pry open the folding key center cover or pry open the rear cover of the smart key.
2. Replace the battery with a new battery (CR2032). When replacing the battery, make sure the battery position.
3. Install the battery in the reverse order of removal.

For transmitter replacement, Kia recommends to visit an authorized Kia dealer/service partner.

⚠ CAUTION

- **The keyless entry system transmitter is designed to give you years of trouble-free use, however it can malfunction if exposed to moisture or static electricity. If you are unsure how to use or replace the battery, Kia recommends to contact an authorized Kia dealer/service partner.**

(Continued)

(Continued)

- **Using the wrong battery can cause the transmitter to malfunction. Be sure to use the correct battery.**
- **To avoid damaging the transmitter, don't drop it, get it wet, or expose it to heat or sunlight.**

✻ NOTICE

An inappropriately disposed battery can be harmful to the environment and human health.
Dispose the battery according to your local law(s) or regulation.

THEFT-ALARM SYSTEM (IF EQUIPPED)

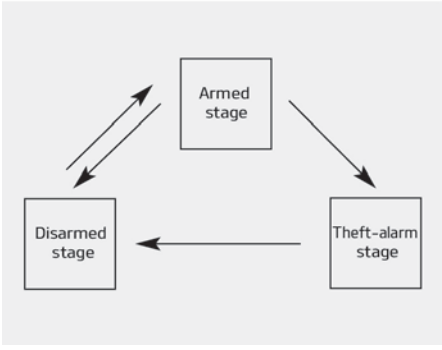

This system is designed to provide protection from unauthorized entry into the vehicle. This system is operated in three stages: the first is the "Armed" stage, the second is the "Theft-alarm" stage, and the third is the "Disarmed" stage. If triggered, the system provides an audible alarm with blinking of the hazard warning lights.

Armed stage

Park the vehicle and stop the engine.
Arm the system as described below.

Using the folding key

1. Turn off the engine and remove the ignition key from the ignition switch.
2. Make sure that all doors, the engine hood and tailgate are closed and latched.
3. Lock the doors by pressing the lock button on the transmitter.
   After completion of the steps above, the hazard warning lights will blink once to indicate that the system is armed.
   If the tailgate or engine hood remains opened, the hazard warning lights will not operate and theft-alarm will not arm. After this, if the tailgate and engine hood are closed, the hazard warning lights will blink once and the theft-alarm will arm.

Using the smart key

1. Turn off the engine.
2. Make sure that all doors, the engine hood and tailgate are closed and latched.
3. • Lock the doors by pressing the button of the front outside door handle with the smart key in your possession.
   After completion of the steps above, the hazard warning lights will operate once to indicate that the system is armed.
   If the tailgate or engine hood remains opened, the hazard warning lights will not operate and theft-alarm will not arm. After this, if the tailgate and engine hood are closed, the hazard warning lights will blink once and the theft-alarm will arm.
   • Lock the doors by pressing the lock button on the smart key.
   After completion of the steps above, the hazard warning lights will operate once to indicate that the system is armed.
   If the tailgate or engine hood remains opened, the hazard warning lights will not operate and theft-alarm will not arm. After this, if the tailgate and engine hood are closed, the hazard warning lights will blink once and the theft-alarm will arm.

Do not arm the system until all passengers have left the vehicle. If the system is armed while a passenger(s) remains in the vehicle, the alarm may be activated when the remaining passenger(s) leaves the vehicle. If any door (or tailgate) or engine hood is opened within 30 seconds after the system enters the armed stage, the system will be disarmed to prevent unnecessary alarm.

Theft-alarm stage

The alarm will be activated if any of the following occurs while the system is armed.

- A front or rear door is opened without using the transmitter.
- The tailgate is opened without using the transmitter.
- The engine hood is opened.

The horn will sound and the hazard warning lights will blink continuously for approximately 27 seconds. To turn off the system, unlock the doors with the transmitter.

Disarmed stage

The system will be disarmed when:

Folding key

- The door unlock button is pressed.
- The engine is started (within 3 seconds).
- The ignition switch is in the "ON" position for 30 seconds or more.

Smart key

- The door unlock button is pressed.
- The button of the front outside door is pressed while carrying the smart key.
- The engine is started (within 3 seconds).

After the doors are unlocked, the hazard warning lights will blink twice to indicate that the system is disarmed.
After pressing the unlock button, if any door (or tailgate) is not opened within 30 seconds, the system will be re-armed.

✻ NOTICE

- Without the smart key system
  If the system is not disarmed with the transmitter, insert the key into the ignition switch and start the engine. Then the system will be disarmed.
- With the smart key system
  If the system is not disarmed with the smart key, open the door with the mechanical key and start the engine. Then the system will be disarmed.
- If you lose your keys, Kia recommends to visit an authorized Kia dealer/service partner.

⚠ CAUTION

Do not change, alter or adjust the theft-alarm system because it could cause the theft-alarm system to malfunction have the system serviced by a professional workshop. Kia
(Continued)

(Continued)

recommends to visit an authorized Kia dealer/service partner.
Malfunctions caused by improper alterations, adjustments or modifications to the theft-alarm system are not covered by your vehicle manufacturer's warranty.

DOOR LOCKS

Operating door locks from outside the vehicle

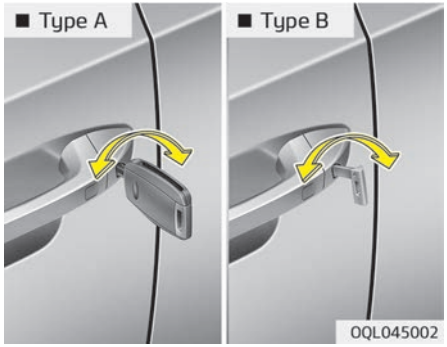

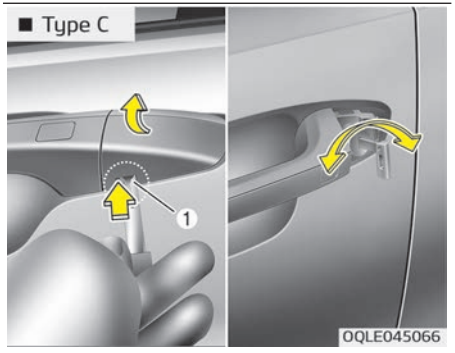

To remove the cover (For Type C):

1. Pull out the door handle.
2. Press the lever (1) located inside the bottom part of the cover with a key or flat-head screwdriver.
3. Push out the cover while pressing the lever.

- Turn the key toward the rear of the vehicle to unlock and toward the front of the vehicle to lock.
- If you lock/unlock the driver's door with a key, all vehicle doors will lock/unlock automatically.
- Doors can also be locked and unlocked with the transmitter.
- Once the doors are unlocked, they may be opened by pulling the door handle.
- When closing the door, push the door by hand. Make sure the doors are closed securely.

✻ NOTICE

- In cold and wet climates, door lock and door mechanisms may not work properly due to freezing conditions.
- If the door is locked/unlocked multiple times in rapid succession with either the vehicle key or door lock switch, the system may stop operating temporarily in order to protect the circuit and prevent damage to system components.

⚠ WARNING

- **If you don't close the door securely, the door may open again.**
- **Be careful that someone's body and hands are not trapped when closing the door.**

⚠ WARNING

If people must spend a longer time in the vehicle while it is very hot or cold outside, there is risk of injuries or danger to life. Do not lock the vehicle from the outside when there are people in it.

⚠ CAUTION

Do not frequently repeat opening and closing of doors, or apply excessive force to a door while the door closer is operating.

Operating door locks from inside the vehicle

With the door lock button

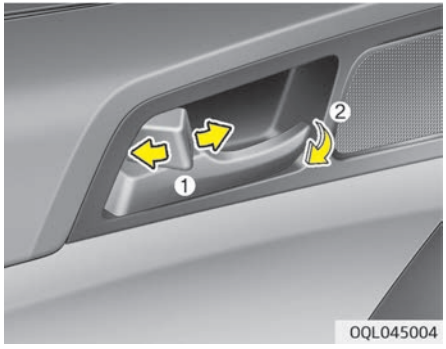

- To unlock a door, pull the door lock button (1) to the "Unlock" position. The red mark on the button will be visible.
- To lock a door, push the door lock button to the "Lock" position. If the door is locked properly, the red mark on the door lock button will not be visible.
- To open a door, pull the door handle (2) outward.
- If the inner door handle of the driver's (or front passenger's) door is pulled when the door lock button is in the lock position, the button will unlock and the door will open (if equipped).
- Front door cannot be locked if the ignition key is in the ignition switch (or if the smart key is in the vehicle) and the front door is opened.

⚠ WARNING

■ Door lock malfunction

If a power door lock ever fails to function while you are in the vehicle, try one or more of the following techniques to exit:

- **Operate the door unlock feature repeatedly (both electronic and manual) while simultaneously pulling on the door handle.**
- **Operate the other door locks and handles, front and rear.**
- **Lower a front window and use the key to unlock the door from outside.**
- **Move to the cargo area and open the tailgate.**

⚠ WARNING

Do not pull the inner door handle of driver's (or passenger's) door while the vehicle is moving.

With central door lock switch



Operate by pressing the central door lock switch.

- When pressing the (🔒) portion (1) of the switch, all vehicle doors will lock.
- When pressing the (🔓) portion (2) of the switch, all vehicle doors will unlock.

- If the key is in the ignition switch (or if the smart key is in the vehicle) and any door is opened, the doors will not lock even though the (🔒) portion (1) of the central door lock switch is pressed.

⚠ WARNING

■ Doors

- **The doors should always be fully closed and locked while the vehicle is in motion to prevent accidental opening of the door. Locked doors will also discourage potential intruders when the vehicle stops or slows down.**
- **Be careful when opening doors and watch for vehicles, motorcycles, bicycles or pedestrians approaching the vehicle in the path of the door. Opening a door when something is approaching can cause damage or injury.**

⚠ WARNING

■ Unlocked vehicles

(Continued)

(Continued)

Leaving your vehicle unlocked can invite theft or possible harm to you or others from someone hiding in your vehicle while you are gone. Always remove the ignition key, engage the parking brake, close all windows and lock all doors when leaving your vehicle unattended.

⚠ WARNING

■ Unattended children

An enclosed vehicle can become extremely hot, causing death or severe injury to unattended children or animals who cannot escape the vehicle. Furthermore, children might operate features of the vehicle that could injure them, or they could encounter other harm, possibly from someone gaining entry to the vehicle. Never leave children or animals unattended in your vehicle.

Door lock/unlock features

Impact sensing door unlock system (if equipped)

All doors will automatically unlock when an impact causes the air bags to deploy.

Speed sensing door lock system (if equipped)

All doors will automatically lock after the vehicle speed exceeds 15 km/h.
You can activate or deactivate the auto door lock/unlock features in the vehicle. Refer to “User settings mode” on page 4-67.

Child-protector rear door locks

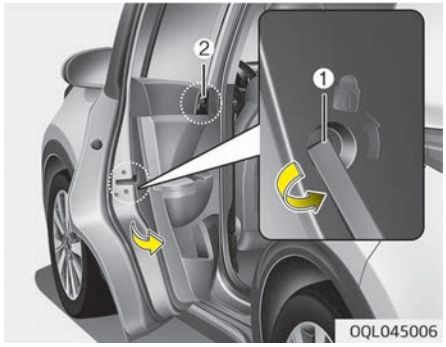

The child safety lock is provided to help prevent children from accidentally opening the rear doors from inside the vehicle. The rear door safety locks should be used whenever children are in the vehicle.
The child safety lock is located on the edge of each rear door. When the child safety lock is in the lock position (1), the rear door will not open if the inner door handle (2) is pulled.
To lock the child safety lock, insert a key (or screwdriver) into the hole and turn it to the lock position.

To allow a rear door to be opened from inside the vehicle, unlock the child safety lock.

⚠ WARNING

■ Rear door locks

If children accidentally open the rear doors while the vehicle is in motion, they could fall out and be severely injured or killed. To prevent children from opening the rear doors from the inside, the rear door safety locks should be used whenever children are in the vehicle.

TAILGATE

⚠ WARNING

■ Exhaust fumes

If you drive with the tailgate opened, you will draw dangerous exhaust fumes into your vehicle which can cause serious injury or death to vehicle occupants.
If you must drive with the tailgate opened, keep the air vents and all windows open so that additional outside air comes into the vehicle.

⚠ WARNING

■ Rear cargo area

Occupants should never ride in the rear cargo area where no restraints are available. To avoid injury in the event of an accident or sudden stops, occupants should always be properly restrained.

Non-power tailgate

Opening the tailgate

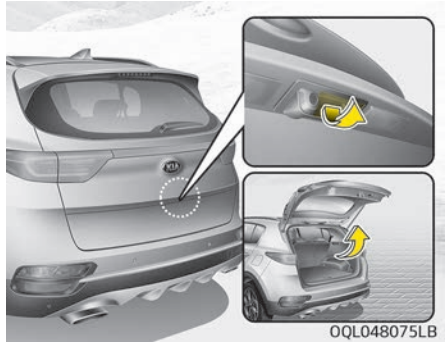

- The tailgate is locked or unlocked when all doors are locked or unlocked with the key, transmitter, smart key or central door lock/unlock switch.
- Only the tailgate is unlocked if the tailgate unlock button on the transmitter or smart key is pressed for approximately 1 second.
- If unlocked, the tailgate can be opened by pressing the handle and pulling it up.
- Once the tailgate is opened and then closed, the tailgate locks automatically. (All doors must be locked.)

✻ NOTICE

In cold and wet climates, door lock and door mechanisms may not work properly due to freezing conditions.

⚠ WARNING

The tailgate swings upward. Make sure no objects or people are near the rear of the vehicle when opening the tailgate.

⚠ CAUTION

Make certain that you close the tailgate before driving your vehicle. Possible damage may occur to the tailgate lift cylinders and attaching hardware if the tailgate is not closed prior to driving.

Closing the tailgate



Lower and push down the tailgate firmly. Make sure that the tailgate is securely latched.

⚠ WARNING

Make sure your hands, feet and other parts of your body are safely out of the way before closing the tailgate.

⚠ CAUTION

Make sure nothing is near the tailgate latch and striker while closing the tailgate. It may damage the tailgate's latch.

Power tailgate (if equipped)







1. Power tailgate open/close button
2. Power tailgate handle switch
3. Power tailgate close button

✻ NOTICE

If the ignition switch is in the ON position, the power tailgate can operate when the automatic shift lever is in P (Park) or the manual shift lever is in N (Neutral).

⚠ WARNING

Never leave children or animals unattended in your vehicle. Children or animals might operate the power tailgate that could result in injury to themselves or others, or damage the vehicle.

✻ NOTICE

Do not put heavy stuff on the power tailgate when you operate the power tailgate. Additional weight on the tailgate could cause damages to the system.

⚠ WARNING

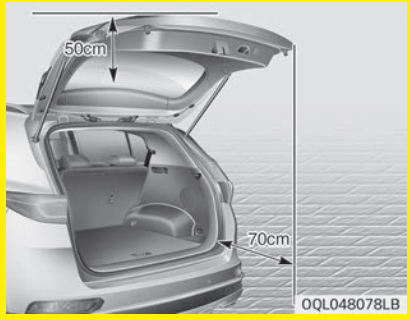

Make sure that there are no people or objects in the path of the power tailgate (or smart tailgate) prior to use. Serious injury, damage to the vehicle or damage to surrounding objects may result if contact with the power tailgate (or smart tailgate) occurs.

⚠ CAUTION

Do not close or open the power tailgate manually. This may cause dam-

(Continued)

(Continued)

age to the power tailgate. If it is necessary to close or open the power tailgate manually when the battery is discharged or disconnected, do not apply excessive force.

Opening the tailgate



The power tailgate will open automatically by doing one of the following:

- Press the tailgate unlock button on the smart key for approximately one second.



- Press the power tailgate open button for approximately one second.
- For emergency stop while power tailgate operating, press the power tailgate open/close button shortly.



- Press the tailgate handle switch carrying the smart key with you.

Closing the tailgate



- Press the power tailgate close button for approximately one second when the tailgate is opened.
  The tailgate will close and lock automatically.
- For emergency stop while power tailgate operating, press the power tailgate open/close button shortly.



- Press the power tailgate close button for approximately one second when the tailgate is opened.
  The tailgate will close and lock automatically.

⚠ WARNING

Make sure there are no people or objects around the tailgate before opening or closing the power tailgate.Wait until the tailgate is open fully and stopped before loading or unloading cargo from the vehicle.

Power tailgate non-opening conditions

The power tailgate will not open or close automatically, when the vehicle is moving more than 3 km/h (2 mph).

⚠ WARNING

The chime will sound continuously if you drive over 3 km/h (2 mph) with the tailgate opened. Stop your vehicle immediately at a safe place and check if your tailgate is opened.

⚠ CAUTION

Do not operate the power tailgate more than 5 times continuously.
(Continued)

(Continued)

It may damage the power tailgate system. If you operate the power tailgate more than 5 times continuously, the chime will sound 3 times and the power tailgate will not operate. At this time, stop operating the tailgate and leave it for more than 1 minute.

✻ NOTICE

- The power tailgate can be operated when the engine is not running. However the power tailgate operation consumes large amounts of vehicle electric power. To prevent the battery from being discharged, do not operate it excessively, e.g.: more than approximately 10 times repeatedly.
- To prevent the battery from being discharged, do not leave the power tailgate in the open position for a long time.

(Continued)

(Continued)

- Do not modify or repair any part of the power tailgate by yourself. Kia recommends to visit an authorized Kia dealer/service partner.
- When jacking up the vehicle to change a tire or repair the vehicle, do not operate the power tailgate. This could cause the power tailgate to operate improperly.
- In cold and wet climates, the power tailgate may not work properly due to freezing conditions.

Automatic reversal

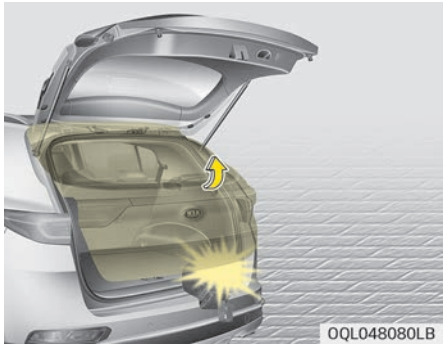

During power opening and closing if the power tailgate is blocked by an object or part of the body, the power tailgate will detect the resistance.

- If the resistance is detected while opening the tailgate, it will stop and move in the opposite direction.
- If the resistance is detected while closing the tailgate, it will stop and move in the opposite direction.

However, if the resistance is weak such as from an object that is thin or soft, or the tailgate is near the latched position, the automatic stop and reversal may not detect the resistance.

If the automatic reversal feature operates continuously more than twice during opening or closing operation, the power tailgate may stop at that position. At this time, close the tailgate manually and operate the tailgate automatically again.

⚠ WARNING

- **Never intentionally place any object or part of your body in the path of the power tailgate to make sure the automatic reversal operates.**
- **Never operate a power tailgate attached with any heavy objects (ex. bicycles). It could damage the power tailgate.**

How to reset the power tailgate

If the battery has been discharged or disconnected, or if the related fuse has been replaced or disconnected, for the power tailgate to operate normally, reset the power tailgate as follows:

1. Automatic Transaxle:
   Put the shift lever in P (Park).
   Manual Transaxle:
   Put the shift lever in N (Neutral).

2. While pressing the tailgate close button, press the tailgate handle switch for more than 3 seconds (the chime will sound).
3. Close the tailgate manually.

If the power tailgate does not work properly after the above procedure, have the system checked by a professional workshop. Kia recommends to visit an authorized Kia dealer/service partner.

✻ NOTICE

If the power tailgate does not operate normally, check again if the gear position is in the right position.

Power tailgate opening height user setting



The driver may set the height of a fully opened tailgate by following the below instruction.

1. Position the tailgate manually to the height you prefer.
2. Press the tailgate close button for more than 3 seconds.
3. Close the tailgate manually after hearing the buzzer sound.

The tailgate will open to the height the driver has set up.

Smart Tailgate (if equipped)

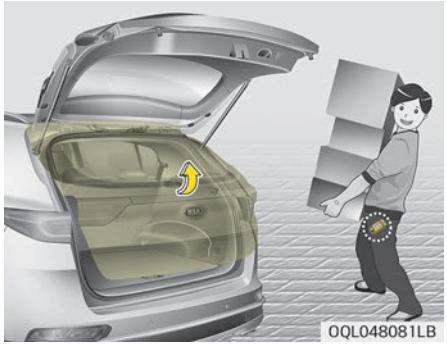

On the vehicle equipped with a smart key, the tailgate can be opened with no-touch activation using the Smart Tailgate system.

How to use the Smart Tailgate

The tailgate can be opened with no-touch activation satisfying all the conditions below.

- After 15 seconds when all doors are closed and locked.
- Positioned in the detecting area for more than 3 seconds.

✻ NOTICE

- The smart tailgate does not operate when:
  - The smart key is detected within 15 seconds after the doors are closed and locked, and is continuously detected.
  - The smart key is detected within 15 seconds after the doors are closed and locked, and 1.5 m from the front door handles (for vehicles equipped with welcome light).
  - A door is not locked or closed.
  - The smart key is in the vehicle.

1. Setting
   To activate the smart tailgate, go to [User Settings Mode] and select [Smart Tailgate] on the LCD display.

❉ For more details, refer to "LCD display (if equipped)" on page 4-61.

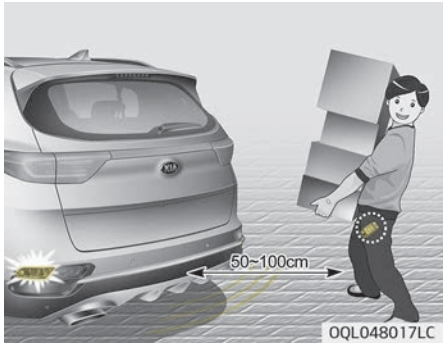

2. Detect and Alert
   If you are positioned in the detecting area (50 ~100 cm behind the vehicle) carrying a smart key, the hazard warning lights will blink and chime will sound for about 3 seconds to alert you the smart key has been detected and the tailgate will open.

✻ NOTICE

Do not approach the detecting area if you do not want the tailgate to open. If you have unintentionally entered the detecting area and the

(Continued)

(Continued)

hazard warning lights and chime starts to operate, leave the detecting area with the smart key. The tailgate will stay closed.

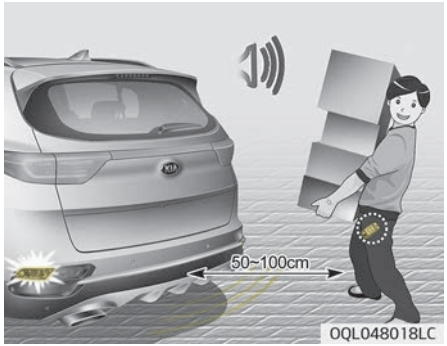

3. Automatic opening
   The hazard warning lights will blink and chime will sound 2 times and then the tailgate will slowly open.

⚠ WARNING

- **Make certain that you close the tailgate before driving your vehicle.**
- **Make sure there are no people or objects around the tailgate before opening or closing the tailgate.**
- **Make sure objects in the rear cargo area do not come out when opening the tailgate on the slope way. It may cause serious injury.**
- **Make sure to deactivate the smart tailgate function when washing your vehicle.**
  Otherwise, the tailgate may open inadvertently.
- **The key should be kept out of reach of children. Children may inadvertently open the smart tailgate while playing around the rear area of the vehicle.**

How to deactivate the Smart Tailgate function using the smart key

■ Smart Key



1. Door lock
2. Door unlock
3. Tailgate open

If you press any button of the smart key during the Detect and Alert stage, the Smart Tailgate function will be deactivated.
Make sure to be aware of how to deactivate the Smart Tailgate function for emergency situations.

✻ NOTICE

- If you press the door unlock button (2), the Smart Tailgate function will be deactivated temporarily. But, if you do not open any door for 30 seconds, the Smart Tailgate function will be activated again.
- If you press the tailgate open button (3) for more than 1 second, the tailgate opens.
- If you press the door lock button (1) or tailgate open button (3) when the Smart Tailgate function is not in the Detect and Alert stage, the Smart Tailgate function will not be deactivated.
- In case you have deactivated the Smart Tailgate function by pressing the smart key button and opened a door, the Smart Tailgate function can be activated again by closing and locking all doors.

Detecting area



- The Smart Tailgate operates with a welcome alert if the smart key is detected within 50 ~ 100 cm from the tailgate.
- The alert stops at once if the smart key is positioned outside the detecting area during the Detect and Alert stage.

✻ NOTICE

- The Smart Tailgate function will not work if any of the following occurs:
  - The smart key is close to a radio transmitter such as a radio station or an airport which can interfere with normal operation of the transmitter.
  - The smart key is near a mobile two way radio system or a cellular phone.
  - Another vehicle's smart key is being operated close to your vehicle.
- The detecting range may decrease or increase when:
  - One side of the tire is raised to replace a tire or to inspect the vehicle.
  - The vehicle is slantingly parked on a slope or unpaved road, etc.

Emergency tailgate safety release

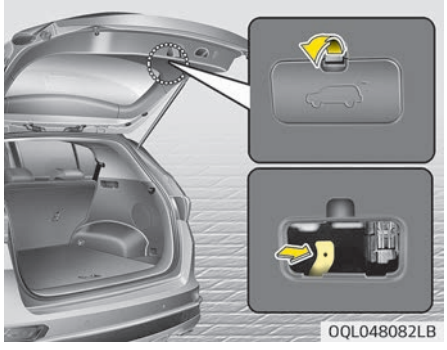

Your vehicle is equipped with the emergency tailgate safety release lever located on the bottom of the tailgate. When someone is inadvertently locked in the luggage compartment. The tailgate can be opened by doing as follows:

1. Remove the cover.
2. Push the release lever to the right.
3. Push up the tailgate.

⚠ WARNING

- **For emergencies, be fully aware of the location of the emergency tailgate safety release lever in the vehicle and how to open the tailgate if you are accidentally locked in the luggage compartment.**
- **No one should be allowed to occupy the luggage compartment of the vehicle at any time. The luggage compartment is a very dangerous location in the event of a crash.**
- **Use the release lever for emergencies only. Use with extreme caution, especially while the vehicle is in motion.**

⚠ WARNING



Do not grasp the part supporting the tailgate (gas lifter), as this may cause serious injury.

WINDOWS

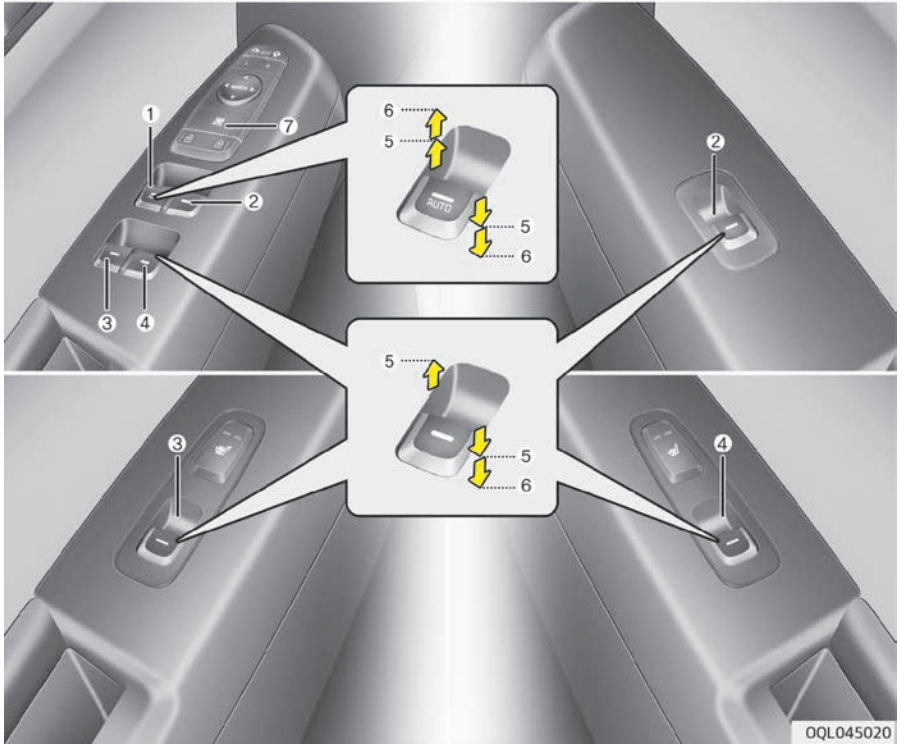

1. Driver's door power window switch
2. Front passenger's door power window switch
3. Rear door (left) power window switch
4. Rear door (right) power window switch
5. Window opening and closing
6. Automatic power window up*/ down*
7. Power window lock switch

✻ NOTICE

In cold and wet climates, power windows may not work properly due to freezing conditions.

Power windows

The ignition switch must be in the ON position for power windows to operate.

*: if equipped

Each door has a power window switch that controls the door's window. The driver has a power window lock button which can block the operation of rear seat windows. The power windows can be operated for approximately 30 seconds after the ignition key is removed or turned to the ACC or LOCK position. However, if the front doors are opened, the power windows cannot be operated even within the 30 second period.
The driver's door has a master power window switch that controls all the windows in the vehicle.
If the window cannot be close because it is blocked by objects, remove the objects and close the window.

✻ NOTICE

While driving with the rear windows down or with the sunroof (if equipped) in an open (or partially open position), your vehicle may demonstrate a wind buffeting or pulsation noise. This noise is a normal occurrence and can be reduced or eliminated by taking the following actions. If the noise occurs with one or both

(Continued)

(Continued)

of the rear windows down, partially lower both front windows approximately one inch. If you experience the noise with the sunroof open, slightly reduce the size of the sunroof opening.

⚠ WARNING

Do not install any accessories in the area of windows. It may impact jam protection.

Window opening and closing

Type A

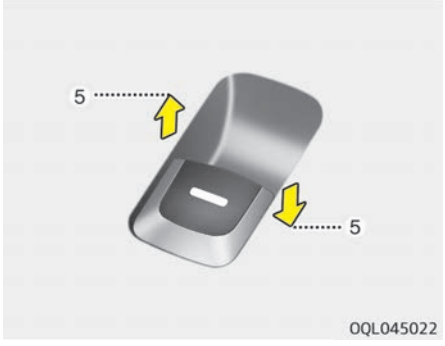

To open or close a window, press down or pull up the front portion of the corresponding switch to the first detent position (5).

Type B - Auto up/down window (for front seat, if equipped)



Pressing or pulling up the power window switch momentarily to the second detent position (6) completely lowers or raises the window even when the switch is released. To stop the window at the desired position while the window is in operation, pull up or press down and release the switch.
If the power window does not operate normally, the automatic power window system must be reset as follows:

1. Turn the ignition switch to the ON position.
2. Close the window and continue pulling up the power window switch for at least 1 second after the window is completely closed.

Type C - Auto down window (if equipped) (Driver's window)



Pressing the power window switch momentarily to the second detent position (6) completely lowers the driver's window even when the switch is released. To stop the window at the desired position while the window is in operation, pull up the switch momentarily to the opposite direction of the window movement.

Automatic reversal (For Type B)

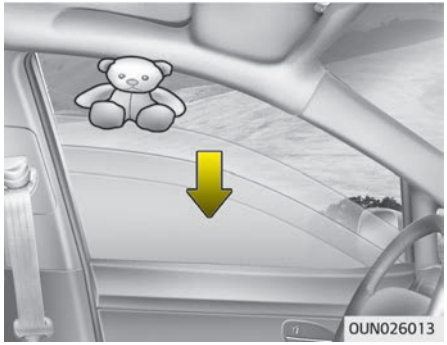

If the upward movement of the window is blocked by an object or part of the body, the window will detect the resistance and will stop upward movement. The window will then lower approximately 30 cm (11.8 in.) to allow the object to be cleared.
If the window detects the resistance while the power window switch is pulled up continuously, the window will stop upward movement then lower approximately 2.5 cm (1 in.).

And if the power window switch is pulled up continuously again within 5 seconds after the window is lowered by the automatic window reversal feature, the automatic window reversal will not operate.

✻ NOTICE

The automatic reverse feature for the window is only active when the "auto up" feature is used by fully pulling up the switch. The automatic reverse feature will not operate if the window is raised using the halfway position on the power window switch.

⚠ WARNING

Always check for obstructions before raising any window to avoid injuries or vehicle damage. If an object less than 4 mm (0.16 in.) in diameter is caught between the window glass and the upper window channel, the automatic reverse window may not
(Continued)

(Continued)

detect the resistance and will not stop and reverse direction.

⚠ WARNING

The automatic reverse feature doesn't active while resetting power window system.
Make sure body parts or other objects are safely out of the way before closing the windows to avoid injuries or vehicle damage.

Power window lock button



The driver can disable the power window switches on the rear passengers' doors by pressing the power window lock switch to the lock position (pressed).
When the power window lock switch is pressed:

- The driver's master control can operate the front passenger's power window and the rear passengers' power windows.
- The front passenger's control can operate the front passenger's power window.

- The rear passengers' control cannot operate the rear passengers' power window.

⚠ CAUTION

- **To prevent possible damage to the power window system, do not open or close two windows or more at the same time. This will also ensure the longevity of the fuse.**
- **Never try to operate the main switch on the driver's door and the individual door window switch in opposite directions at the same time. If this is done, the window will stop and cannot be opened or closed.**

⚠ WARNING

■ Windows

- **NEVER leave the keys in your vehicle with unsupervised children, when the engine is running.**

(Continued)

(Continued)

- **NEVER leave any child unattended in the vehicle. Even very young children may inadvertently cause the vehicle to move, entangle themselves in the windows, or otherwise injure themselves or others.**
- **Always double check to make sure all arms, hands, head and other obstructions are safely out of the way before closing a window.**
- **Do not allow children to play with the power windows. Keep the driver's door power window lock button in the LOCK position (pressed). Serious injury can result from unintentional window operation by the child.**
- **Do not extend heads or any limbs outside the window while the vehicle is in motion.**

HOOD

Opening the hood

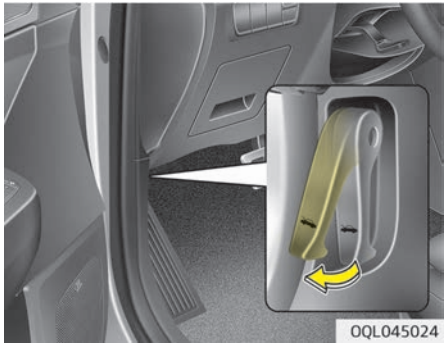

1. Pull the release lever to unlatch the hood. The hood should pop open slightly.

⚠ WARNING

Open the hood after turning off the engine on a flat surface, shifting the shift lever to the P (Park) position for automatic transaxle and to the 1st (First) gear or R (Reverse) for manual transaxle, and setting the parking brake.

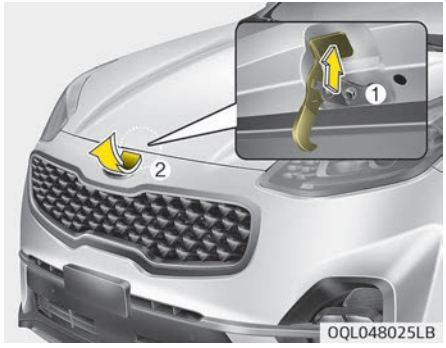

2. Go to the front of the vehicle, raise the hood slightly, push the secondary latch (1) left side and lift the hood (2).
3. Raise the hood. It will completely rise by itself after it has been raised about halfway.

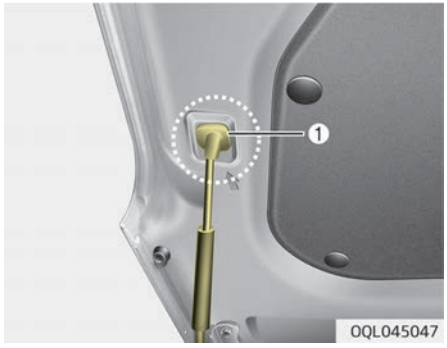

4. Pull out the stay rod.
5. Hold the hood opened with the stay rod (1).

⚠ WARNING

- **Grasp the stay rod in the area wrapped in rubber. The rubber will help prevent you from being burned by hot metal when the engine is hot.**

(Continued)

(Continued)

- **The stay rod must be inserted completely into the hole provided whenever you inspect the engine compartment. This will prevent the hood from falling and possibly injuring you.**

Hood open warning

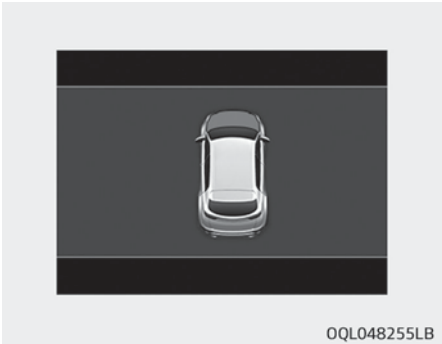

The warning message will appear on the LCD display when hood is open.
The warning chime will operate when the vehicle is being driven at or above 3 km/h (2 mph) with the hood open.

Closing the hood

1. Before closing the hood, check the following:
   - All filler caps in the engine compartment must be correctly installed.
   - Gloves, rags or any other combustible material must be removed from the engine compartment.
2. Return the support rod to its clip to prevent it from rattling.
3. Lower the hood until it is about 30 cm (1 ft.) above the closed position and let it drop. Make sure that it locks into place.
4. Check that the hood has engaged properly. If the hood can be raised slightly, it is not properly engaged. Open it again and close it with a little more force.

⚠ WARNING

- **Before closing the hood, ensure that all obstructions are removed from the hood opening.**
  Closing the hood with an obstruction present in the hood opening may result in property damage or severe personal injury.
- **Do not leave gloves, rags or any other combustible material in the engine compartment. Doing so may cause a heat-induced fire.**

⚠ WARNING

- **Always double check to be sure that the hood is firmly latched before driving away. If it is not latched, the hood could open while the vehicle is being driven, causing total loss of visibility, which might result in an accident.**
- **Do not move the vehicle with the hood raised. The view will be blocked and the hood could fall or be damaged.**

FUEL FILLER LID

Opening the fuel filler lid

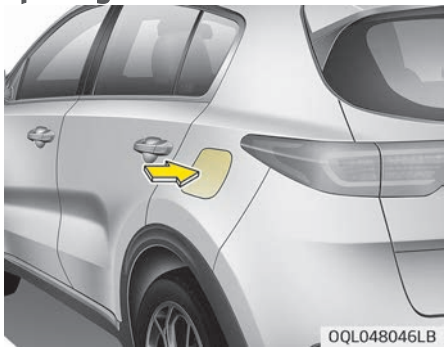

1. To open the fuel filler lid, press the 3 o'clock position edge of the fuel filler lid.

✻ NOTICE

The fuel filler lid will open and close only when all doors are unlocked.

✻ NOTICE

If the fuel filler lid does not open because ice has formed around it, tap lightly or push on the lid to break the ice and release the lid. Do not pry on the lid. If necessary, spray around the lid with an approved de-icer fluid (do not use radiator anti-freeze) or move the vehicle to a warm place and allow the ice to melt.



2. Pull the fuel filler lid (1) out to fully open.
3. To remove the fuel tank cap (2), turn it counterclockwise. You may hear a hissing noise as the pressure inside the tank equalizes.
4. Place the cap on the fuel filler lid.

Closing the fuel filler lid

1. To install the cap, turn it clockwise until it "clicks". This indicates that the cap is securely tightened.
2. To close the fuel filler lid, press the edge of the fuel filler lid.
   Make sure it is securely closed.

⚠ WARNING

■ Refueling

- **If pressurized fuel sprays out, it can cover your clothes or skin and subject you to the risk of fire and burns. Always remove the fuel cap carefully and slowly. If the cap is venting fuel or if you hear a hissing sound, wait until the condition stops before completely removing the cap.**

(Continued)

(Continued)

- Do not "top off" after the nozzle automatically shuts off when refueling.
- Always check that the fuel cap is installed securely to prevent fuel spillage in the event of an accident.

⚠ WARNING

■ Refueling dangers

Automotive fuels are flammable materials. When refueling, please note the following guidelines carefully. Failure to follow these guidelines may result in severe personal injury, severe burns or death by fire or explosion.

- Read and follow all warning posted at the gas station facility.
- Before refueling note the location of the Emergency Gasoline Shut-Off, if available, at the gas station facility.

(Continued)

(Continued)

- Before touching the fuel nozzle, you should eliminate potentially dangerous static electricity discharge by touching another metal part of the vehicle, a safe distance away from the fuel filler neck, nozzle, or other gas source.
- Do not get back into a vehicle once you have begun refueling since you can generate static electricity by touching, rubbing or sliding against any item or fabric (polyester, satin, nylon, etc.) capable of producing static electricity. Static electricity discharge can ignite fuel vapors resulting in rapid burning. If you must reenter the vehicle, you should once again eliminate potentially dangerous static electricity discharge by touching a metal part of the vehicle, away from the fuel filler neck, nozzle or other gasoline source.

(Continued)

(Continued)

- When using an approved portable fuel container, be sure to place the container on the ground prior to refueling. Static electricity discharge from the container can ignite fuel vapors causing a fire.
  Once refueling has begun, contact with the vehicle should be maintained until the filling is complete.
  Use only approved portable plastic fuel containers designed to carry and store gasoline.
- Do not use cellular phones while refueling. Electric current and/or electronic interference from cellular phones can potentially ignite fuel vapors causing a fire.
- When refueling, always shut the engine off. Sparks produced by electrical components related to the engine can ignite fuel vapors causing a fire. Once refueling is complete, check to make sure the filler cap and filler lid are securely closed, before starting the engine.

(Continued)

(Continued)

- **DO NOT use matches or a lighter and DO NOT SMOKE or leave a lit cigarette in your vehicle while at a gas station especially during refueling. Automotive fuel is highly flammable and can, when ignited, result in fire.**
- **If a fire breaks out during refueling, leave the vicinity of the vehicle, and immediately contact the manager of the gas station and then contact the local fire department. Follow any safety instructions they provide.**

⚠ CAUTION

- **Make sure to refuel your vehicle according to "Fuel requirements" on page 1-03.**

(Continued)

(Continued)

- **If the fuel filler cap requires replacement, please make sure that you use parts designed for replacement in your vehicle.**
  An incorrect fuel filler cap can result in a serious malfunction of the fuel system or emission control system. For more detailed information, Kia recommends to contact an authorized Kia dealer/service partner.
- **Do not spill fuel on the exterior surfaces of the vehicle. Any type of fuel spilled on painted surfaces may damage the paint.**
- **After refueling, make sure the fuel cap is installed securely to prevent fuel spillage in the event of an accident.**

PANORAMA SUNROOF (IF EQUIPPED)



If your vehicle is equipped with a sunroof, you can slide or tilt your sunroof with the sunroof control lever located on the overhead console.
The sunroof can be operated for approximately 30 seconds after the ignition key is removed or turned to the ACC or LOCK position. However, if the front doors are opened, the sunroof cannot be opened even within the 30 seconds period.

- In cold and wet climates, the sunroof may not work properly due to freezing conditions.
- After the vehicle is washed or in a rainstorm, be sure to wipe off any water that is on the sunroof before operating it.

⚠ CAUTION

■ Sunroof control lever

Do not continue to move the sunroof control lever after the sunroof is fully opened, closed, or tilted. Damage to the motor or system components could occur.

⚠ CAUTION

Make sure the sunroof is fully closed when leaving your vehicle. If the sunroof is opened, rain or snow may leak through the sunroof and wet the interior as well as cause theft.

⚠ WARNING

■ Sunroof break

The sunroof, which is made of glass, may break if the sufficient impact is applied. In this case, in an accident, any improperly belted occupant may be tossed out of the vehicle through the sunroof, possibly resulting in-
(Continued)

(Continued)

jury. To minimize all the possible accident risk, all occupants must be properly belted and, in case of a child, be fastened in a proper child restraint.

⚠ WARNING

- **In order to prevent accidental operation of the sunroof, especially by a child, do not let a child operate the sunroof.**
- **Do not sit on the top of the vehicle. It may cause vehicle damage.**

Sunroof open warning

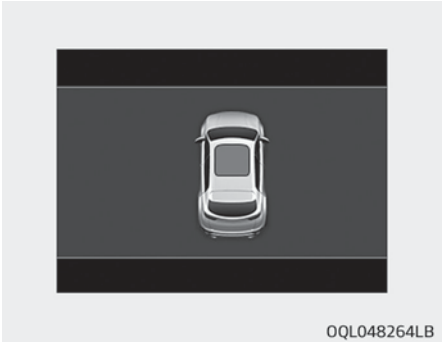

If the driver removes the ignition key (smart key: turns off the engine) when the sunroof is not fully closed, the warning chime will sound for approximately 4 seconds and a message will appear on the LCD display.
Close the sunroof securely when leaving your vehicle.

⚠ WARNING

- **Never adjust the sunroof or sunshade while driving. This could result in loss of control and an accident that may cause death, serious injury, or property damage.**
- **If you would like to carry items on the roof using a cross bar, do not operate the sunroof.**
- **When carrying cargo on the roof, do not load heavy items above the sunroof or glass roof.**
- **Do not allow children to operate the sunroof.**

⚠ CAUTION

Do not extend any luggage outside the sunroof while driving.

Sunshade



To open the sunshade

Pull the sunroof control lever backward to the 1st detent position.

To close the sunshade when the sunroof glass is closed

Push the sunroof control lever forward to the 1st detent position.
To stop the sliding at any point, press the sunshade control switch momentarily.

✻ NOTICE

Wrinkles formed on the sunshade as material characteristic are normal.

⚠ CAUTION

- **Do not pull or push the sunshade by hand. It could cause sunshade failure.**
- **Close the sunroof when driving through dusty roads. Dust may cause a malfunction of the vehicle system.**

✻ NOTICE

Only the front glass of the panorama sunroof opens and closes.

Sliding the sunroof

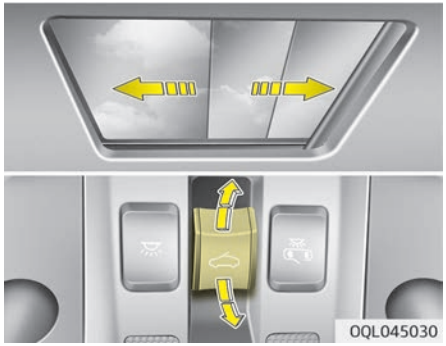

When the sunshade is closed

Pull the sunroof control lever backward to the 2nd detent position, the sunshade and sunroof glass will slide all the way open. To stop the sunroof movement at any point, push the sunroof control lever momentarily.

When the sunshade is opened

Pull the sunroof control lever backward to the 1st or 2nd detent position, the sunroof glass will slide all the way open. To stop the sunroof movement at any point, push the sunroof control lever momentarily.

✻ The front part of the sunroof glass can only be opened and closed.

Tilting the sunroof

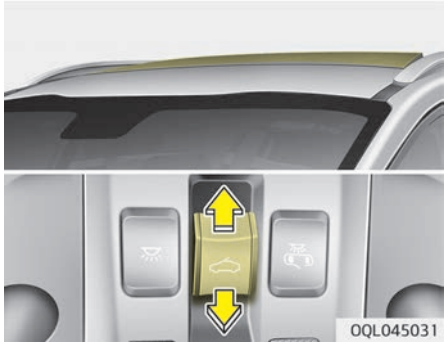

When the sunshade is closed

Push the sunroof control lever upward, the sunshade will slide halfway open then the sunroof glass will tilt.
To stop the sunroof movement at any point, push the sunroof control lever momentarily.

When the sunshade is opened

Push the sunroof control lever upward, the sunroof glass will tilt.
To stop the sunroof movement at any point, push the sunroof control lever momentarily.

Closing the sunroof

To close the sunroof glass with the sunshade

Push the sunroof control lever forward or downward to the 2nd detent position. The sunroof glass and sunshade will close automatically.
To stop the sunroof movement at any point, push the sunroof control lever momentarily.

To close the sunroof glass only

Push the sunroof control lever forward or downward to the 1st detent position. The sunroof glass will close automatically.
To stop the sunroof movement at any point, push the sunroof control lever momentarily.

Automatic reversal

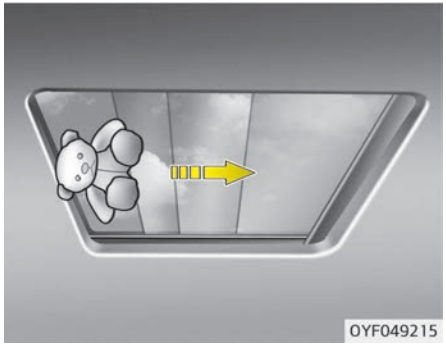

If an object or part of the body is detected while the sunroof glass or sunshade is closing automatically, it will reverse the direction, and then stop.
The auto reverse function does not work if a tiny obstacle is between the sliding glass or sunshade and the sunroof sash. You should always check that all passengers and objects are away from the sunroof before closing it.

Objects less than 0.16 inch (4 mm) in diameter caught between the sunroof glass and the front glass channel may not be detected by the automatic reverse glass and the glass will not stop and reverse direction.

⚠ WARNING

■ Sunroof

- **Be careful that no head, hands and body parts are obstructed by a closing sunroof.**
- **Do not extend the face, neck, arms or body outside the sunroof while driving.**
- **Make sure your hands and head are safely out of the way before closing a sunroof.**
- **A panorama sunroof is made of glass, therefore it may break in an accident. If you do not have your seat belt on, you may stick out of the broken glass and get injured or killed. For all passengers safety, have an appropriate protection on. (ex. seat belt, CRS, etc.)**

⚠ CAUTION

- **Periodically remove any dirt that may accumulate on the guide rail.**
- **If you drive with the sunroof opened right after a car wash or rain, water may get inside the vehicle.**

⚠ CAUTION

■ Sunroof motor damage

If you try to open the sunroof when the temperature is below freezing or when the sunroof is covered with snow or ice, the glass or the motor could be damaged.

Resetting the sunroof

Whenever the vehicle battery is disconnected or discharged, you must reset your sunroof system as follows:

1. Start the engine.
2. Close the sunshade and sunroof completely if opened.
3. Release the sunroof control lever.
4. Push the sunroof control lever forward in the direction of close until the sunshade opens and the sunroof glass moves a little. Then, release the lever.
5. Push the sunroof control lever forward in the direction of close, until the sunroof operates as follows again:
   Sunshade Open → Glass Tilt Open → Glass Slide Open → Glass Slide Close → Sunshade Close
   Then, release the lever.

When this is complete, the sunroof system has been reset.

✻ NOTICE

If you do not reset the sunroof, it may not work properly.

STEERING WHEEL

Electronic power steering

Power steering uses the motor to assist you in steering the vehicle. If the engine is off or if the power steering system becomes inoperative, the vehicle may still be steered, but it will require increased steering effort.
Electronic power steering is controlled by the power steering control unit which senses the steering wheel torque and vehicle speed to command the motor.
The steering effort becomes heavier as the vehicle's speed increases and becomes lighter as the vehicle's speed decreases for better control of the steering wheel.
Should you notice any change in the effort required to steer during normal vehicle operation, have the system checked by a professional workshop. Kia recommends to visit an authorized Kia dealer/service partner.

✻ NOTICE

The following symptoms may occur during normal vehicle operation:

(Continued)

(Continued)

- The EPS warning light does not illuminate.
- The steering effort is high immediately after turning the ignition switch on. This happens as the EPS system performs the diagnostics. When the diagnostics is completed, the steering effort wheel will return to its normal condition.
- A click noise may be heard from the EPS relay after the ignition switch is turned to the ON or LOCK position.
- Motor noise may be heard when the vehicle is at a stop or at a low driving speed.
- The steering effort can suddenly increase, if the operation of the EPS system is stopped to prevent serious accidents when EPS control unit detects malfunction of the EPS system by self-diagnosis.

(Continued)

(Continued)

- The steering effort increases if the steering wheel is rotated continuously when the vehicle is not in motion.
  However, after a few minutes, it will return to its normal conditions.
- If the Electronic Power Steering System does not operate normally, the warning light will illuminate on the instrument cluster. The steering wheel may become difficult to control or operate abnormally. Kia recommends to visit an authorized Kia dealer/service partner.
- When you operate the steering wheel in low temperature, the steering effort may be high and abnormal noise could occur. If the temperature rises, the noise will disappear. This is a normal condition.

(Continued)

(Continued)

- If the vehicle needs to be jump started due to battery discharge, the steering wheel may not function normally. This is a temporary situation caused by low battery voltage. It will be solved once the battery is charged. Check for normal steering function by turning the steering wheel slowly before driving the vehicle.

Tilt & telescopic steering

A tilt and telescopic steering wheel allows you to adjust the steering wheel before you drive. You can also raise it to give your legs more room when you exit and enter the vehicle.
The steering wheel should be positioned so that it is comfortable for you to drive, while permitting you to see the instrument panel warning lights and gauges.

⚠ WARNING

- **Never adjust the angle of the steering wheel while driving. You may lose steering control and cause severe personal injury, death or accidents.**
- **After adjusting, push the steering wheel both up and down to be certain it is locked in position.**

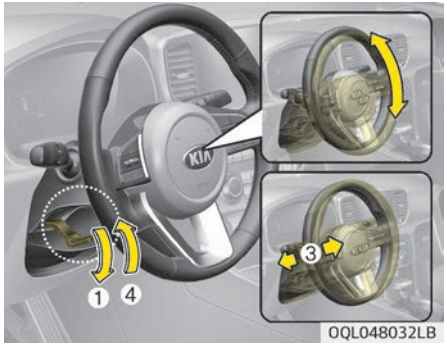

To change the steering wheel angle, pull down the lock release lever (1), adjust the steering wheel to the desired angle (2) and height (3), then pull up the lock-release lever (4) to lock the steering wheel in place. Be sure to adjust the steering wheel to the desired position before driving.

✻ NOTICE

After adjustment, sometimes the lock-release lever may not lock the steering wheel.

(Continued)

(Continued)

It is not a malfunction. This occurs when two gears engage. In this case, adjust the steering wheel again and then lock the steering wheel.

Heated steering wheel (if equipped)

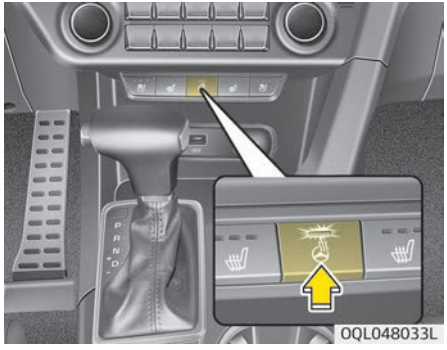

With the ignition switch in the ON position, pressing the heated steering wheel button warms the steering wheel. The indicator on the button will illuminate.

To turn the heated steering wheel off, press the button once again. The indicator on the button will turn off.

✻ NOTICE

The heated steering wheel will turn off automatically approximately 30 minutes after the heated steering wheel is turned on.

⚠ CAUTION

Do not install any grip to operate the steering wheel. This causes damage to the heated steering wheel system.

Horn



To sound the horn, press the area indicated by the horn symbol on your steering wheel (see illustration). The horn will operate only when this area is pressed. Check the horn regularly to be sure it operates properly.

⚠ CAUTION

- **Do not strike the horn severely to operate it, or hit it with your fist. Do not press on the horn with a sharp-pointed object.**
- **When cleaning the steering wheel, do not use an organic solvent such as thinner, benzene, alcohol and gasoline. Doing so may damage the steering wheel.**

MIRRORS

Inside rearview mirror

Adjust the rearview mirror so that the center view through the rear window is seen. Make this adjustment before you start driving.

⚠ WARNING

■ Rear visibility

Do not place objects in the rear seat or cargo area which would interfere with your vision through the rear window.

⚠ WARNING

Do not adjust the rearview mirror while the vehicle is moving. This could result in loss of control, and an accident which could cause death, serious injury or property damage.

⚠ WARNING

Do not modify the inside mirror and don't install a wide mirror. It could result in injury, during an accident or deployment of the air bag.

Day/night rearview mirror (if equipped)

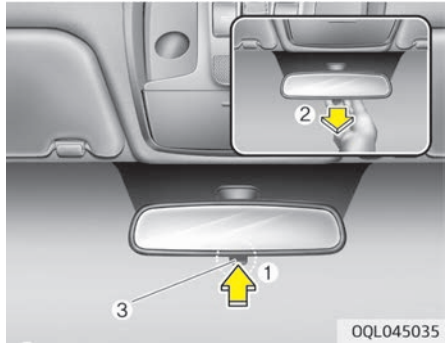

Make this adjustment before you start driving and while the day/night lever (3) is in the day position (1).

Pull the day/night lever (3) toward you (2) to reduce the glare from the headlights of the vehicles behind you during night driving.

Remember that you lose some rearview clarity in the night position.

✻ (1): Day, (2): Night

Electrochromic mirror (ECM) (if equipped)

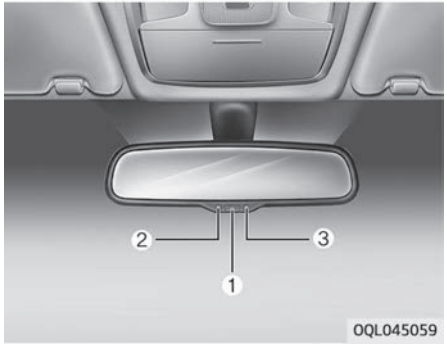

The electric rearview mirror automatically controls the glare from the headlights of the vehicles behind you in nighttime or low light driving conditions. The sensor (3) mounted in the mirror senses the light level around the vehicle, and automatically controls the headlight glare from the vehicles behind you.
When the engine is running, the glare is automatically controlled by the sensor mounted in the rearview mirror.

Whenever the shift lever is shifted into reverse (R), the mirror will automatically go to the brightest setting in order to improve the drivers view behind the vehicle.

⚠ CAUTION

When cleaning the mirror, use a paper towel or similar material dampened with glass cleaner. Do not spray glass cleaner directly on the mirror. It may cause the liquid cleaner to enter the mirror housing.

To operate the electric rearview mirror:

- The mirror defaults to the ON position whenever the ignition switch is turned on.
- Press the ON/OFF button (1) to turn the automatic dimming function off. The mirror indicator light (2) will turn off.
  Press the ON/OFF button (1) to turn the automatic dimming function on. The mirror indicator light (2) will illuminate.

Outside rearview mirror

Be sure to adjust the mirror angles before driving.

Your vehicle is equipped with both left-hand and right-hand outside rearview mirrors. The mirrors can be adjusted remotely with the remote switch. The mirror heads can be folded back to prevent damage during an automatic car wash or when passing through a narrow street.

⚠ WARNING

■ Rearview mirrors

- **The outside rearview mirror is convex. Objects seen in the mirror are closer than they appear.**
- **Use your interior rearview mirror or direct observation to determine the actual distance of following vehicles when changing lanes.**

⚠ CAUTION

Do not scrape ice off the mirror face; this may damage the surface of the glass. If ice should restrict the movement of the mirror, do not force the mirror for adjustment. To remove

(Continued)

(Continued)

ice, use a de-icer spray, or a sponge or soft cloth with warm water.

⚠ CAUTION

If the mirror is jammed with ice, do not adjust the mirror by force. Use an approved spray de-icer (not radiator antifreeze) to release the frozen mechanism or move the vehicle to a warm place and allow the ice to melt.

⚠ WARNING

Do not adjust or fold the outside rearview mirrors while the vehicle is moving. This could result in loss of control, and an accident which could cause death, serious injury or property damage.

Remote control

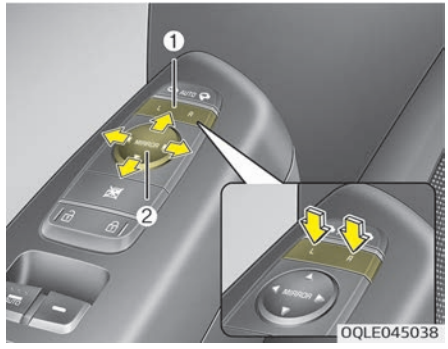

Adjusting the rearview mirrors:

1. Press either the L (Front left side) or R (Front right side) button (1) to select the rearview mirror you would like to adjust.
2. Use the mirror adjustment control (2) to position the selected mirror up, down, left or right.
3. After adjustment, put the button into neutral (center) position to prevent inadvertent adjustment.

⚠ CAUTION

- **The mirrors stop moving when they reach the maximum adjusting angles, but the motor continues to operate while the switch is pressed. Do not press the switch longer than necessary, the motor may be damaged.**
- **Do not attempt to adjust the outside rearview mirror by hand. Doing so may damage the parts.**

Folding the outside rearview mirror

Manual type

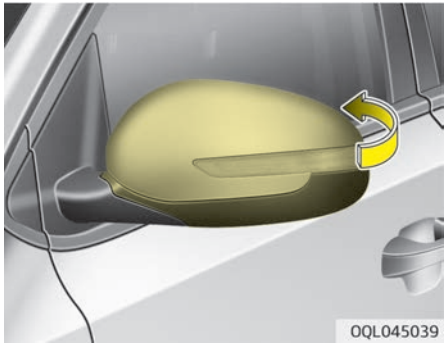

To fold the outside rearview mirror, grasp the housing of the mirror and then fold it toward the rear of the vehicle.

Electric type

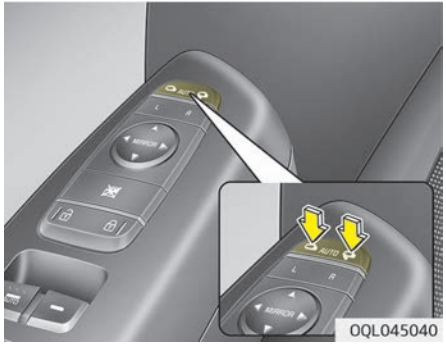

The outside rearview mirror can be folded or unfolded by pressing the switch as below.
Left: The mirror will unfold.
Right: The mirror will fold.
Center (AUTO): The mirror will fold or unfold automatically as follows:

- Without smart key system
  - The mirror will fold or unfold when the door is locked or unlocked by the transmitter. (if equipped)
- With smart key system
  - The mirror will fold or unfold when the door is locked or unlocked by the smart key.
  - The mirror will fold or unfold when the door is locked or unlocked by the button on the outside door handle.
  - The mirror will unfold when you approach the vehicle with a smart key in possession (if equipped), with (1)all doors closed and locked and (2) the switch in the center (Auto) Position, and (3) the welcome Mirror/light function selected from the user settings.

⚠ CAUTION

The electric type outside rearview mirror operates even though the ignition switch is in the LOCK position. However, to prevent unnecessary battery discharge, do not adjust the mirrors longer than necessary while the engine is not running.

⚠ CAUTION

In case it is an electric type outside rearview mirror, don't fold it by hand. It could cause motor failure.

INSTRUMENT CLUSTER

■ Type A



■ Type B



OQL048191L/OQL048192LB

1. Tachometer
2. Speedometer
3. Engine coolant temperature gauge
4. Fuel gauge
5. LCD display
6. Warning and indicator lights

✻ The actual cluster in the vehicle may differ from the illustration.
For more details, refer to “Gauges” on page 4-56.

■ Type C



■ Type D



OQL048194L/OQL048193LB

1. Tachometer
2. Speedometer
3. Engine coolant temperature gauge
4. Fuel gauge
5. LCD display
6. Warning and indicator lights

✻ The actual cluster in the vehicle may differ from the illustration. For more details, refer to "Gauges" on page 4-56.

Instrument cluster control

Adjusting instrument cluster illumination (if equipped)

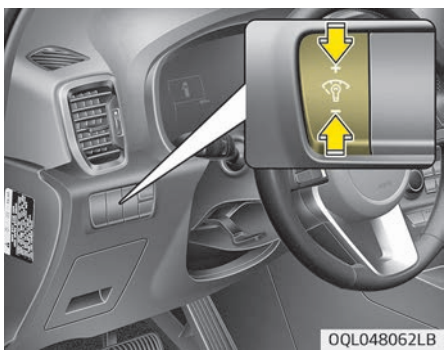

OQL048062LB

⚠ WARNING

Never adjust the instrument cluster while driving. This could result in loss of control and lead to an accident that may cause death, serious injury, or property damage.

The brightness of the instrument panel illumination is changed by pressing the illumination control button ("+" or "–") when the ignition switch or Engine Start/Stop button is ON, or the tail lights are turned on.

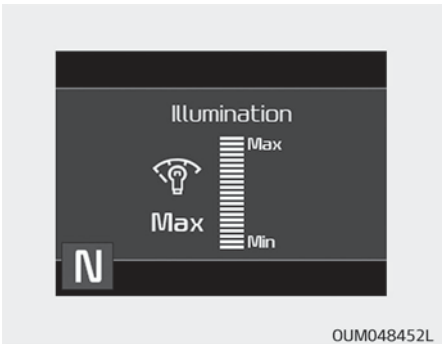

- If you hold the illumination control button ("+" or "–"), the brightness will be changed continuously.
- If the brightness reaches to the maximum or minimum level, an alarm will sound.

LCD display control

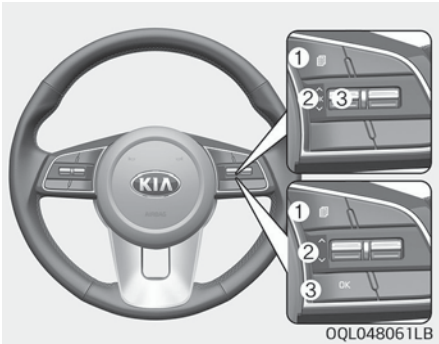

The LCD display modes can be changed by using the control buttons on the steering wheel.

:	MODE button to change the LCD MODES
∧/∨:	MOVE scroll switch to select the items
OK:	SET/REST button to set the items or reset the items

❊ For the LCD modes, refer to "LCD display (if equipped)" on page 4-61.

Gauges

Speedometer

The speedometer indicates the speed of the vehicle and is calibrated in miles per hour (mph) and/or kilometers per hour (km/h).

■ Type A (km/h)



OQL048182LB

■ Type B (MPH, km/h)



OQL048184LB

Tachometer

■ Type A



OQL048183LB

■ Type B



OQL048185LB

The tachometer indicates the approximate number of engine revolutions per minute (rpm).
Use the tachometer to select the correct shift points and to prevent lugging and/or over-revving the engine.

⚠ CAUTION

Do not operate the engine within the tachometer's RED ZONE. This may cause severe engine damage.

Engine coolant temperature gauge

■ Type A



OQL048230LB

■ Type B

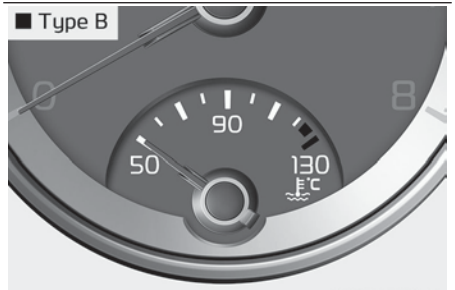

OQL048229LB

This gauge indicates the temperature of the engine coolant when the ignition switch or Engine Start/Stop button is ON.

⚠ CAUTION

If the gauge pointer moves beyond the normal range area toward the "130 or H" position, it indicates overheating that may damage the engine.
Do not continue driving with an overheated engine. If your vehicle overheats, refer to "If the engine overheats" on page 7-07.

⚠ WARNING

Never remove the radiator cap when the engine is hot. The engine coolant is under pressure and could severely burn. Wait until the engine is cool before adding coolant to the reservoir.

Fuel gauge



This gauge indicates the approximate amount of fuel remaining in the fuel tank.

✻ NOTICE

- The fuel tank capacity is given in "Recommended lubricants and capacities" on page 9-11.
- The fuel gauge is supplemented by a low fuel warning light, which will illuminate when the fuel tank is nearly empty.
- On inclines or curves, the fuel gauge pointer may fluctuate or the low fuel warning light may come on earlier than usual due to the movement of fuel in the tank.

⚠ WARNING

■ Fuel gauge

Running out of fuel can expose vehicle occupants to danger.
You must stop and obtain additional fuel as soon as possible after the warning light comes on or when the gauge indicator comes close to the "0 or E (Empty)" level.

⚠ CAUTION

Avoid driving with a extremely low fuel level. Running out of fuel could cause the engine to misfire damaging the catalytic converter.

Odometer



The odometer indicates the total distance that the vehicle has been driven and should be used to determine when periodic maintenance should be performed.
- Odometer range: 0 ~ 1,599,999 km or 999,999 miles.

Outside temperature gauge

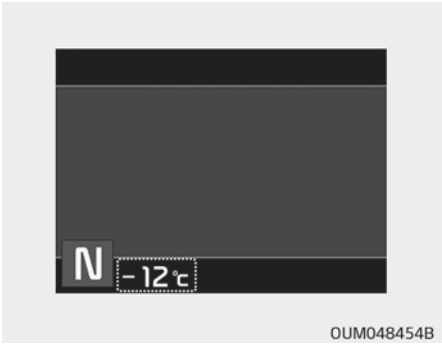

This gauge indicates the current outside air temperatures by 1 °C (1 °F) .
- Temperature range: -40 °C ~ 85 °C (-40 °F ~ 185 °F)

The outside temperature on the display may not change immediately like a general thermometer to prevent the driver from being inattentive.
The temperature unit can be changed by using the "User Settings" mode of the LCD display.

❇ For more details, refer to “LCD display (if equipped)” on page 4-61.

Transaxle shift indicator

Automatic transaxle shift indicator (if equipped)

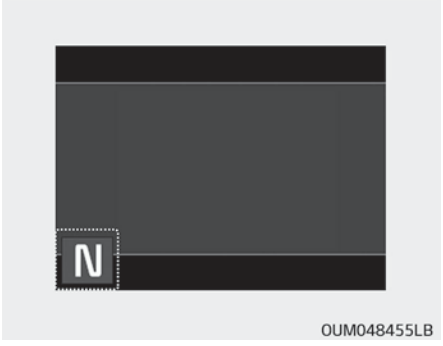

This indicator displays which automatic transaxle shift lever is selected.
- Park: P
- Reverse: R
- Neutral: N
- Drive: D
- Sports Mode:
  - Type A : 1, 2, 3, 4, 5, 6
  - Type B : 1, 2, 3, 4, 5, 6, 7, 8

Automatic Transaxle Shift Indicator in Sports Mode (if equipped)

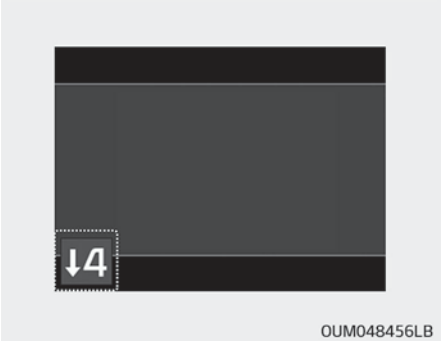

In the Sports Mode, this indicator informs which gear is desired while driving to save fuel.
- Type A
- Shifting up: ▲2, ▲3, ▲4, ▲5, ▲6
- Shifting down: ▼1, ▼2, ▼3, ▼4, ▼5

- Type B
- Shifting up: ▲2, ▲3, ▲4, ▲5, ▲6, ▲7, ▲8
- Shifting down: ▼1, ▼2, ▼3, ▼4, ▼5, ▼6, ▼7

For example
- ▲3: Indicates that shifting up to the 3rd gear is desired (currently the shift lever is in the 2nd or 1st gear).
- ▼4: Indicates that shifting down to the 4th gear is desired (currently the shift lever is in the 5th or 6th gear).

When the system is not working properly, the indicator is not displayed.

Manual transaxle shift indicator (if equipped)

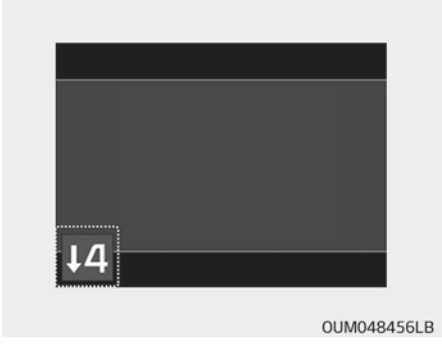

This indicator informs which gear is desired while driving to save fuel.
- Shifting up: ▲2, ▲3, ▲4, ▲5, ▲6
- Shifting down: ▼1, ▼2, ▼3, ▼4, ▼5

For example
- ▲3: Indicates that shifting up to the 3rd gear is desired (currently the shift lever is in the 2nd or 1st gear).
- ▼3: Indicates that shifting down to the 3rd gear is desired (currently the shift lever is in the 4th, 5th, or 6th gear).

When the system is not working properly, the indicator is not displayed.

LCD DISPLAY (IF EQUIPPED)

LCD modes

Modes	Symbol	Explanation
Trip Computer		This mode displays driving information like the tripmeter, fuel economy, and so on. ❉ For more details, refer to “Trip Computer” on page 4-64.
Turn by Turn mode (if equipped)		This mode displays the state of the navigation.
Assist mode (if equipped)		This mode displays the state of below systems. - SCC with S&G (Refer to “SCC with S&G” on page 6-94) - Lane keeping Assist (Refer to “Lane Keeping Assist (LKA) System” on page 6-112) - Tire Pressure (Refer to “TPMS” on page 7-11) ❉ For more details, refer to chapter 6 and 7.
User Settings		On this mode, you can change settings of the doors, lamps and so on.
Master warning mode		This mode informs of warning messages related to Low tire pressure or malfunction of Blind-spot Collision Warning and so on.

❉ For controlling the LCD modes, refer to “LCD Display Control” on page 4-55.

Trip computer mode

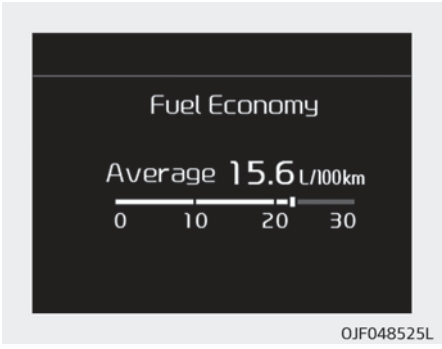

This mode displays driving information like the tripmeter, fuel economy, and so on.

❉ For more details, refer to “Trip Computer” on page 4-62.

Turn by turn mode (if equipped)

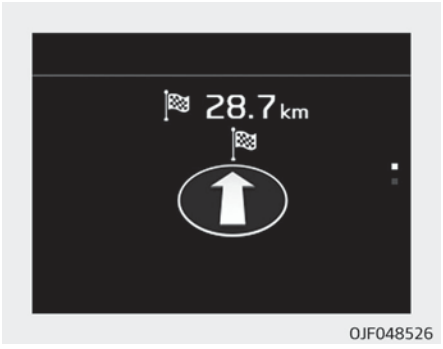

This mode displays the state of the navigation.

Assist mode (if equipped)

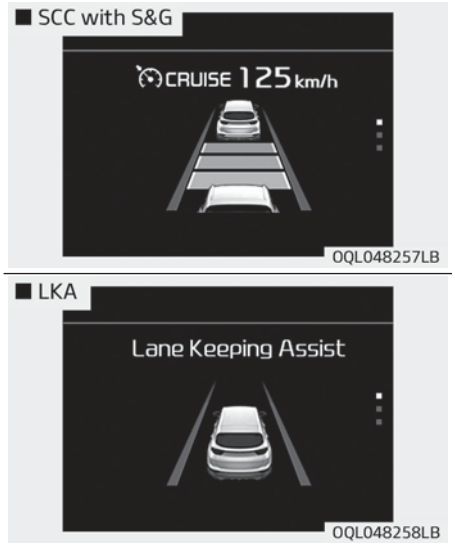



Assist mode displays the state of below systems.

- SCC with S&G (if equipped)
- Lane keeping Assist (if equipped)
- Lane Departure Warning (if equipped)
- Tire Pressure (if equipped)

Service mode

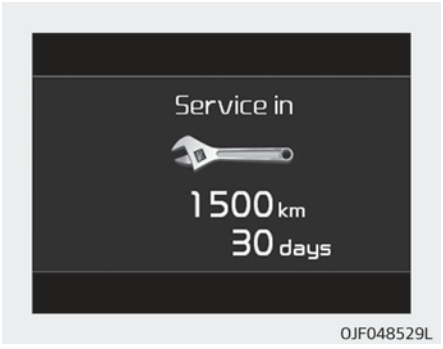

When Service Required is set, the remaining distance/period to drive appears on the LCD screen.
From the point at which the remaining distance to drive amounts to 1,500 km or the remaining period amounts to 30 days, Service Required message automatically displays and remained on LCD screen for a number of seconds every time the engine start/stop button is ON.
With Service Required in place, Service Required Alarm message pops up when an aggregated amount of miles/time driven reaches a certain point.

With Service Required mode, press OK button for more than 5 sec. The values will return to initial setting values.

- ❋ See Service Interval in User Settings Mode in this chapter for further information about Service Required Setting.
- ❋ Service Required Setting
  Battery Cable Disconnection, Fuse Switch OFF or Service Required Setting values (an amount of miles/time driven) can be randomly changed. In such cases, re-enter Service Required Setting values.

Master warning mode (if equipped)



- This warning light informs the driver the following situations
  - LED head lamp malfunction (if equipped)
  - Smart Cruise Control with Stop & Go malfunction (if equipped)
  - Forward Collision-Avoidance Assist malfunction (if equipped)
  - Blind-Spot Collision Warning radar blind (if equipped)
  - Lamp malfunction
  - High Beam Assist malfunction (if equipped)

The Master Warning Light illuminates if one or more of the above warning situations occur.
If the warning situation is solved, the master warning light will be turned off.

Distance to empty



- The distance to empty is the estimated distance the vehicle can be driven with the remaining fuel.
  - Distance range: 1 ~ 1,999 km or 1 ~ 1,999 mi
- If the estimated distance is below 1 km (1 mi.), the trip computer will display "---" as distance to empty.

✻ NOTICE

- If the vehicle is not on level ground or the battery power has been interrupted, the distance to empty function may not operate correctly.
- The distance to empty may differ from the actual driving distance as it is an estimate of the available driving distance.
- The trip computer may not register additional fuel if less than 6 liters (1.6 gallons) of fuel are added to the vehicle.
- The fuel economy and distance to empty may vary significantly based on driving conditions, driving habits, and condition of the vehicle.

Trip modes (trip computer)

The trip computer is a microcomputer-controlled driver information system that displays information related to driving.

✻ NOTICE

Some driving information stored in the trip computer (for example Average Fuel Economy) resets if the battery is disconnected.

Trip modes

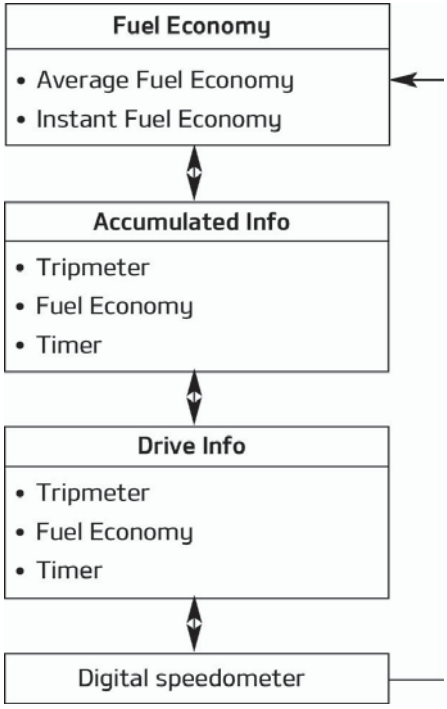

To change the trip mode, scroll the MOVE scroll switch (▲/▼) in the trip computer mode.

Fuel economy

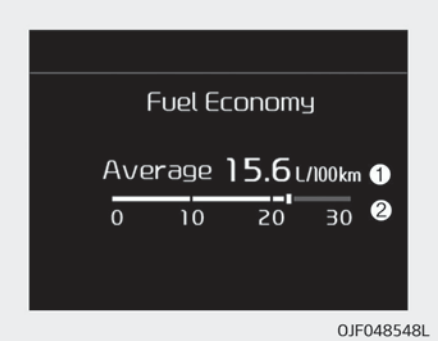

Average Fuel Economy (1)

- The average fuel economy is calculated by the total driving distance and fuel consumption since the last average fuel economy reset.
  - Fuel economy range: 0.0 ~ 99.9 km/L, L/100km or MPG
- The average fuel economy can be reset both manually and automatically.

Manual reset

To clear the average fuel economy manually, press the OK button (reset) on the steering wheel for more than 1 second when the average fuel economy is displayed.

Automatic reset

To make the average fuel economy be reset automatically whenever refueling, select the "Fuel economy auto reset" mode in User Setting menu of the LCD display (Refer to "LCD Display" on page 4-61).

- OFF - You may set to default manually by using the trip switch reset button.
- When driving - The vehicle will automatically set to default once 4 hours pass after the Engine Start/Stop Button or ignition switch is in the ACC or OFF position.
- When refueling - After refueling more than 6 liters and driving over 1km/h, the vehicle will reset to default automatically.

✻ NOTICE

The average fuel economy is not displayed for more accurate calculation if the vehicle does not drive more than 10 seconds or 50 meters (0.03 miles) since the Engine Start/Stop Button is turned to ON.

Instant Fuel Economy (2)

- This mode displays the instant fuel economy during the last few seconds when the vehicle speed is more than 10 km/h (6.2 mph).
  - Fuel economy range: 0.0 ~ 30 km/L, L/100km or 0.0 ~ 50.0 MPG

Accumulated driving information mode

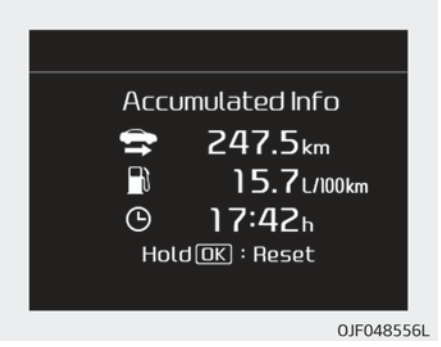

Displays accumulated information starting from mileage/fuel efficiency/time default point.

- Accumulated information is calculated after the vehicle has run for more than 300 meters.
- If you press "OK" button for more than 1 second after the Cumulative Information is displayed, the information will be reset.
- If the engine is running, even when the vehicle is not in motion, the information will be accumulated.

One time driving information mode

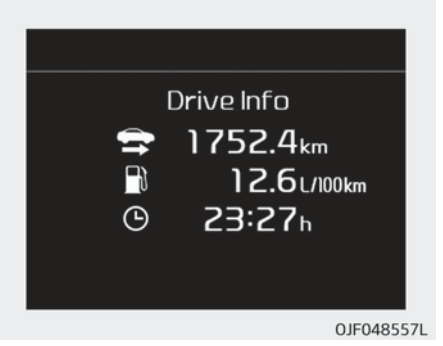

The vehicle will display Driving Information once per one ignition cycle.

- Fuel efficiency is calculated after the vehicle has run for more than 300 meters.
- The Driving Information will be reset 4 hours after ignition has been turned off. So, when the vehicle ignition is turned on within 4 hours, the information will not be reset.
- If you press "OK" button for more than 1 second after the Driving Information is displayed, the information will be reset.

- If the engine is running, even when the vehicle is not in motion, the information will be accumulated.

Digital speedometer

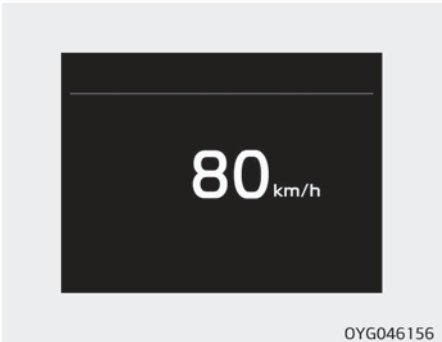

This mode displays the current speed of the vehicle.

User settings mode

Description

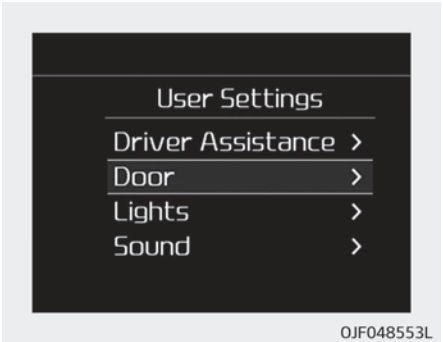

On this mode, you can change setting of the doors, lamps, and so on.

⚠ WARNING

Do not adjust the User Setting while driving.You may lose your steering control and cause severe personal injury or accidents.

Shift to P to edit settings/Engage parking brake to edit settings

- Automatic transaxle
  For your safety, change the User Settings after parking the vehicle, applying the parking brake and moving the shift lever to P (Park).

- Manual transaxle
  For your safety, change the User Settings after engaging the parking brake and moving the shift lever to N (Neutral).

Driving assist (if equipped)

- Smart Cruise Control with Stop & Go Response (if equipped) :
  - Choose the sensitivity (slow, normal, fast) of the smart cruise control.

❊ For more details, refer to “Smart Cruise Control with Stop & Go” on page 6-94.

- Driver Attention Warning : Choose the alert stage (Off/Normal/High stage) of the Driver Attention Warning.
- Lane Keeping Assist (LKA, if equipped) :

- Lane Departure Warning : To activate the lane departure warning function.
- Standard LKA : To activate the standard LKA mode.
- Active LKA : To activate the active LKA mode.

❈ For more details, refer to "LKA (Lane Keeping Assist)" on page 6-112.

• Forward Collision-avoidance Assist (FCA, if equipped) :
- To activate or deactivate the FCA system.

❈ For more details, refer to "Forward Collision-avoidance Assist (FCA)" on page 6-59.

• Forward Collision Warning (FCW, if equipped)
- Choose the sensitivity of the forward collision warning. (Late/Normal/Early)

❈ For more details, refer to "Forward Collision-avoidance Assist (FCA)" on page 6-59.

• Rear Cross-Traffic Collision Warning (if equipped)
- If this item is checked, the rear cross traffic collision warning function will be activated.

❈ For more details, refer to "Blind-spot Collision Warning" on page 6-123.

Door/Tailgate

• Automatic Lock :
- Disable : The auto door lock operation will be deactivated.
- Enable on Speed : All doors will be automatically locked when the vehicle speed exceeds 15km/h (9.3mph).
- Enable on Shift : All doors will be automatically locked if the automatic transaxle shift lever is shifted from the P (Park) position to the R (Reverse), N(Neutral), or D (Drive) position.

• Automatic Unlock :
- Disable : The auto door unlock operation will be canceled.
- Vehicle Off : All doors will be automatically unlocked when the Engine Start/Stop Button or ignition switch is set to the OFF position.
- Driver Door Unlock : All doors will be automatically unlocked when the driver's door is opened.
- On Shift to P : All doors will be automatically unlocked if the automatic transaxle shift lever is shifted to the P (Park) position.

• Power Tailgate (if equipped)
- If this item is checked, the power tailgate function will be activated.

❈ For more details, refer to "Power tailgate" on page 4-20.

• Smart Tailgate (if equipped)
- If this item is checked, the smart tailgate function will be activated. If the power tailgate function is not activated, you cannot activate this function.

❈ For more details, refer to "Smart tailgate" on page 4-25.

Light

• One Touch Turn Signal:
- Off: The one touch turn signal function will be deactivated.
- 3, 5, 7 Flashes : The lane change signals will blink 3, 5 or 7 times when the turn signal lever is moved slightly.

❉ For more details, refer to “Light” on page 4-81.

• Head Lamp Delay:
  - If this item checked, the head lamp delay function will be activated.

Sound

• Parking Distance Warning Vol. (if equipped) :
  - Adjust the Park Assist System volume. (Level 1 ~ 3)

❉ For more details, refer to “Parking assist system” on page 4-86.

• Welcome Sound (if equipped) :
  - If this item checked, the welcome sound function will be activated.

Convenience

• Welcome Mirror/Light (if equipped) :
  - If this item checked, the welcome Mirror/light function will be activated.

• Wireless charging system(if equipped) :
  - If this item checked, the wireless charging system function will be activated.

• Wiper/Light Display (if equipped) :
  If this item checked, the Wiper/Light Display will be activated.

• Auto rear wiper (in R, if equipped) :
  - If this item is checked, the rear wiper will automatically activated when the front wiper is in ON position and shift lever is in R (reverse) position.

• Gear Position Pop-up (if equipped) :
  If this item checked, the gear position pop-up display will be activated.

• Icy road warning (if equipped) :
  If this item checked, the Icy road warning display will be activated.

Service interval

• Enable service interval
  To activate or deactivate the service interval function.

• Adjust Interval
  To adjust the interval by mileage and period.

• Reset
  To reset the service interval function.

Other features

• Fuel Economy Auto Reset
  - Off : The average fuel economy will not reset automatically whenever refueling.
  - After Ignition : The average fuel economy will reset automatically whenever it has passed 4 hours after turning OFF the engine.
  - After Refueling: The average fuel economy will reset automatically when refueling.

❉ For more information, refer to “Trip Computer” on page 4-64.

• Fuel Economy Unit
  - Choose the fuel economy unit. (Km/L, L/100Km)

• Temperature Unit
  - Choose the temperature unit. (°C, °F)

• Tire Pressure Unit (if equipped)
  - Choose the tire pressure unit. (psi, kPa, bar)

Language (if equipped)

Choose the language

Reset

You can reset the menus in the User Settings Mode. All menus in the User Settings Mode are initialized, except language and service interval.

Warning messages (if equipped)

Shift to P (for smart key system and automatic transaxle)

- This warning message illuminates if you try to turn off the engine without the shift lever in P (Park) position.
- At this time, the Engine Start/Stop Button turns to the ACC position (If you press the Engine Start/Stop Button once more, it will turn to the ON position).

Low key battery (for smart key system)

- This warning message illuminates if the battery of the smart key is discharged when the Engine Start/Stop Button changes to the OFF position.

Press START button while turning wheel (for smart key system)

- This warning message illuminates if the steering wheel does not unlock normally when the Engine Start/Stop Button is pressed.
- It means that you should press the Engine Start/Stop Button while turning the steering wheel right and left.

Steering wheel unlocked (for smart key system)

- This warning message illuminates if the steering wheel does not lock when the Engine Start/Stop Button changes to the OFF position.

Check steering wheel lock system (for smart key system)

- This warning message illuminates if the steering wheel does not lock normally when the Engine Start/Stop Button changes to the OFF position.

Press brake pedal to start engine (for smart key system and automatic transaxle)

- This warning message illuminates if the Engine Start/Stop Button changes to the ACC position twice by pressing the button repeatedly without depressing the brake pedal.
- It means that you should depress the brake pedal to start the engine.

Press clutch pedal to start engine (for smart key system and manual transaxle)

- This warning message illuminates if the Engine Start/Stop Button changes to the ACC position twice by pressing the button repeatedly without depressing the clutch pedal.
- It means that you should depress the clutch pedal to start the engine.

Key not in vehicle (for smart key system)

- This warning message illuminates if the smart key is not in the vehicle when you press the Engine Start/Stop Button.
- It means that you should always have the smart key with you.

Key not detected (for smart key system)

- This warning message illuminates if the smart key is not detected when you press the Engine Start/Stop Button.

Press start button again (for smart key system)

- This warning message illuminates if you can not operate the Engine Start/Stop Button when there is a problem with the Engine Start/Stop Button system.
- It means that you could start the engine by pressing the Engine Start/Stop Button once more.
- If the warning illuminates each time you press the Engine Start/Stop Button, have the vehicle inspected by a professional workshop. Kia recommends to visit an authorised Kia dealer/service partner.

Press start button with key (for smart key system)

- This warning message illuminates if you press the Engine Start/Stop Button while the warning message "Key not detected" is illuminating.
- At this time, the immobilizer indicator light blinks.

Check BRAKE SWITCH fuse (for smart key system and automatic transaxle)

- This warning message illuminates if the brake switch fuse is disconnected.
- It means that you should replace the fuse with a new one. If that is not possible, you can start the engine by pressing the Engine Start/Stop Button for 10 seconds in the ACC position.

Shift to P or N to start engine (for smart key system and automatic transaxle)

- This warning message illuminates if you try to start the engine with the shift lever not in the P (Park) or N (Neutral) position.

✻ NOTICE

You can start the engine with the shift lever in the N (Neutral) position. But, for your safety, we recommend that you start the engine with the shift lever in the P (Park) position.

Door, Hood, Tailgate Open

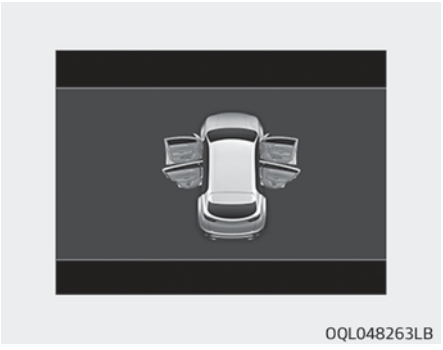

- It means that any door, hood, or tailgate is open.

Sunroof open (if equipped)



- This warning message illuminates if you turn off the engine and then open the driver's door when the sunroof is open.

Low washer fluid (if equipped)

- This warning message illuminates on the service reminder mode if the washer fluid level in the reservoir is nearly empty.
- It means that you should refill the washer fluid.

Turn on FUSE SWITCH (if equipped)

- This warning message illuminates if the fuse switch under the steering wheel is OFF.
- It means that you should turn the fuse switch on.

✻ For more details, refer to "Fuses" on page 8-58.

Diesel particulate filter (DPF) warning (for Diesel engine)

This warning message illuminates if the DPF system has a malfunction. at this time, DPF warning light also blinks. In this case, have the DPF system checked by a professional workshop. Kia recommends to visit an authorized Kia dealer/service partner.
In this case, have the DPF system checked by a professional workshop. Kia recommends to visit an authorized Kia dealer/service partner.

✻ For more details, refer to "Warning lights" on page 4-74.

Check headlights (if equipped)

This warning message illuminates if there is a malfunction (burned-out bulb or circuit malfunction) with the head lights (high and low beam). In this case, have your vehicle inspected by a professional workshop. Kia recommends to visit an authorized Kia dealer/service partner.

✻ NOTICE

- When replacing the bulb, use the same wattage bulb.
  For more information, refer to "Bulb wattage" on page 9-07.
- If the different wattage bulb is equipped with the vehicle, this warning message is not displayed.

Check forward collision avoidance assist system (if equipped)

- This warning message illuminates if there is a malfunction with the Forward Collision Avoidance Assist (FCA) system. In this case, have the vehicle inspected by a professional workshop. Kia recommends to visit an authorised Kia dealer/service partner.

❈ For more details, refer to “Forward Collision Avoidance Assist(FCA) system” on page 6-59.

Check high beam assist system (if equipped)

- This warning message illuminates if the high beam assist system has a malfunction.

In this case, have the vehicle inspected by a professional workshop. Kia recommends to visit an authorised Kia dealer/service partner.

Device in wireless charger (if equipped)

If a smart phone is still left on the wireless charging pad unattended, even when the ignition is in ACC OFF and the instrument panel's one time driving information mode has finished, a warning message will lit up on the instrument panel.

❈ For more details, refer to “Wireless smart phone charging system (if equipped)” on page 4-149.

Low fuel

- This warning message illuminates if the fuel tank is nearly empty.
  - When the low fuel level warning light is illuminates.

  Add fuel as soon as possible.

Icy road warning (if equipped)



This warning pop-up message and light are to warn the driver the road may be icy.
When the Outside Temperature is below approximately 4°C (40°F),

- The warning light (including Outside Temperature and unit) blinks 5 times and then illuminates.
- The warning pop-up message displays, and the warning chime sounds once at the same time only once for each ignition cycle.

WARNING AND INDICATOR LIGHTS

Warning lights

✻ NOTICE

■ Warning lights

Make sure that all warning lights are OFF after starting the engine. If any light is still ON, this indicates a situation that needs attention.

Air bag warning light



This warning light illuminates:

- Once you set the ignition switch or Engine Start/Stop button to the ON position.
  - It illuminates for approximately 6 seconds and then goes off.
- When there is a malfunction with the SRS.
  In this case, have the vehicle inspected by a professional workshop. Kia recommends to visit an authorized Kia dealer/service partner.

Seat belt warning light



This warning light informs the driver that the seat belt is not fastened.

✻ For more details, refer to "Seat belts" on page 3-16.

Parking brake & brake fluid warning light



This warning light illuminates:

- Once you set the ignition switch or Engine Start/Stop button to the ON position.
  - It illuminates for approximately 3 seconds.
  - It remains on if the parking brake is applied.
- When the parking brake is applied.
- When the brake fluid level in the reservoir is low.
  - If the warning light illuminates with the parking brake released, it indicates that the brake fluid level in the reservoir is low.

If the brake fluid level in the reservoir is low:

1. Drive carefully to the nearest safe location and stop your vehicle.
2. With the engine stopped, check the brake fluid level immediately and add fluid as required (for more details, refer to "Brake/Clutch fluid (if equipped)" on page 8-33). Then check all brake components for fluid leaks. If any leak on the brake system is still found, the warning light remains on, or the brakes do not operate properly, do not drive the vehicle.
   In this case, have the vehicle towed to a professional workshop and inspected. Kia recommends to visit an authorized Kia dealer/service partner.

Dual-diagonal braking system

Your vehicle is equipped with dual-diagonal braking systems. This means you still have braking on two wheels even if one of the dual systems should fail.
With only one of the dual systems working, more than normal pedal travel and greater pedal pressure are required to stop the vehicle.
Also, the vehicle will not stop in as short a distance with only a portion of the brake system working.

If the brakes fail while you are driving, shift to a lower gear for additional engine braking and stop the vehicle as soon as it is safe to do so.

⚠ WARNING

■ Parking Brake & Brake Fluid Warning Light

Driving the vehicle with a warning light ON is dangerous. If the Parking Brake & Brake Fluid Warning Light illuminates with the parking brake released, it indicates that the brake fluid level is low.
In this case, have the vehicle inspected by a professional workshop. Kia recommends to visit an authorized Kia dealer/service partner.

Anti-lock brake system (ABS) warning light



This warning light illuminates:

- Once you set the ignition switch or Engine Start/Stop button to the ON position.
  - It illuminates for approximately 3 seconds and then goes off.
- When there is a malfunction with the ABS (the normal braking system will still be operational without the assistance of the anti-lock brake system).
  In this case, have the vehicle inspected by a professional workshop. Kia recommends to visit an authorized Kia dealer/service partner.

Electronic brake force distribution (EBD) system warning light





These two warning lights illuminate at the same time while driving:

- When the ABS and regular brake system may not work normally.
  In this case, have the vehicle inspected by a professional workshop. Kia recommends to visit an authorized Kia dealer/service partner.

⚠ WARNING

■ Electronic Brake force Distribution (EBD) System Warning Light

(Continued)

(Continued)

When both ABS and Parking Brake & Brake Fluid Warning Lights are on, the brake system will not work normally and you may experience an unexpected and dangerous situation during sudden braking.
In this case, avoid high speed driving and abrupt braking.
In this case, have the vehicle inspected by a professional workshop as soon as possible.
Kia recommends to visit an authorized Kia dealer/service partner.

✻ NOTICE

■ Electronic Brake force Distribution (EBD) System Warning Light

When the ABS Warning Light is on or both ABS and Parking Brake & Brake Fluid Warning Lights are on, the speedometer, odometer, or tripmeter may not work. Also, the EPS Warning Light may illuminate and

(Continued)

(Continued)

the steering effort may increase or decrease.
If the warning light remains on after adding oil or if oil is not available, have the vehicle inspected by a professional workshop as soon as possible. Kia recommends to visit an authorized Kia dealer/service partner.

Electronic Power Steering (EPS) Warning Light (if equipped)



This warning light illuminates:

- Once you set the ignition switch or Engine Start/Stop button to the ON position.
  - This indicator light comes on after the ignition key is turned to the ON position and then goes out after approximately 3 seconds.
- When there is a malfunction with the EPS.
  In this case, have the vehicle inspected by a professional workshop as soon as possible.
  Kia recommends to visit an authorized Kia dealer/service partner.

Malfunction indicator lamp (MIL)



This warning light illuminates:

- Once you set the ignition switch or Engine Start/Stop button to the ON position.
  - It remains on until the engine is started.
- When there is a malfunction with the emission control system.
  In this case, have the vehicle inspected by a professional workshop. Kia recommends to visit an authorized Kia dealer/service partner.

⚠ CAUTION

■ Malfunction Indicator Lamp (MIL)

Driving with the Malfunction Indicator Lamp (MIL) on may cause damage to the emission control systems which could effect drivability and/or fuel economy.

⚠ CAUTION

■ Gasoline Engine

If the Malfunction Indicator Lamp (MIL) illuminates, potential catalytic converter damage is possible which could result in loss of engine power.
In this case, have the vehicle inspected by a professional workshop. Kia recommends to visit an authorized Kia dealer/service partner.

⚠ CAUTION

■ Diesel Engine

If the Malfunction Indicator Lamp (MIL) blinks, some error related to the injection quantity adjustment occurs which could result in loss of engine power, combustion noise and poor emission.
In this case, have the engine control system inspected by a professional workshop. Kia recommends to visit an authorized Kia dealer/service partner.

Charging system warning light



This warning light illuminates:

- Once you set the ignition switch or Engine Start/Stop button to the ON position.
  - It remains on until the engine is started.
- When there is a malfunction with either the alternator or electrical charging system.

If there is a malfunction with either the alternator or electrical charging system:

1. Drive carefully to the nearest safe location and stop your vehicle.
2. Turn the engine off and check the alternator drive belt for looseness or breakage.
   If the belt is adjusted properly, there may be a problem in the electrical charging system.
   In this case, have the vehicle inspected by a professional workshop. Kia recommends to visit an authorized Kia dealer/service partner.

Engine oil pressure warning light



This warning light illuminates:

- Once you set the ignition switch or Engine Start/Stop Button to the ON position.
  - It remains on until the engine is started.
- When the engine oil pressure is low.

If the engine oil pressure is low:

1. Drive carefully to the nearest safe location and stop your vehicle.
2. Turn the engine off and check the engine oil level (for more details, refer to "Engine oil" on pages 8-26; 8-28). If the level is low, add oil as required.
   If the warning light remains on after adding oil or if oil is not available, have the vehicle inspected by a professional workshop as soon as possible. Kia recommends to visit an authorized Kia dealer/service

⚠ CAUTION

■ Engine Oil Pressure Warning Light

- **If the engine does not stop immediately after the Engine Oil Pressure Warning Light is illuminated, severe damage could result.**
- **If the warning light stays on while the engine is running, it indicates that there may be serious engine damage or malfunction. In this case,**
  1. **Stop the vehicle as soon as it is safe to do so.**
  2. **Turn off the engine and check the oil level. If the oil level is low, fill the engine oil to the proper level.**
  3. **Start the engine again. If the warning light stays on after the engine is started, turn the engine off immediately. In this case, have the vehicle inspected by a professional workshop. Kia recommends to visit an authorized Kia dealer/service partner.**

✻ NOTICE

- If you travel approximately 50 ~ 100 km after the engine warms up, after adding the engine oil, the warning light will go off (for Gasoline engine).
- Open and close the hood (Diesel engine only), or cycle the ignition from OFF to ON 3 times within 10 seconds, the warning light will go off immediately. However, when you turn off the warning light without adding the engine oil, the light will come on again after traveling approximately 50 ~ 100 km after the engine warms up.

Low fuel level warning light



This warning light illuminates:

When the fuel tank is nearly empty.

If the fuel tank is nearly empty:

Add fuel as soon as possible.

⚠ CAUTION

■ Low Fuel Level

Driving with the Low Fuel Level warning light on or with the fuel level below "0 or E" can cause the engine to misfire and damage the catalytic converter (if equipped).

Low tire pressure warning light (if equipped)



This warning light illuminates:

- Once you set the ignition switch or Engine Start/Stop button to the ON position.
  - It illuminates for approximately 3 seconds and then goes off.
- When one or more of your tires are significantly underinflated (the location of the underinflated tires is displayed on the LCD display).

✻ For more details, refer to "Tire Pressure Monitoring System (TPMS) (if equipped)" on page 7-08.

This warning light remains on after blinking for approximately 70 seconds or repeats blinking and off at the intervals of approximately 3 seconds:

- When there is a malfunction with the TPMS.
  Have the vehicle inspected by a professional workshop as soon as possible. Kia recommends to visit an authorized Kia dealer/service partner.

✻ For more details, refer to "Tire Pressure Monitoring System (TPMS) (if equipped)" on page 7-08.

⚠ WARNING

■ Safe Stopping

- **The TPMS cannot alert you to severe and sudden tire damage caused by external factors.**
- **If you notice any vehicle instability, immediately take your foot off the accelerator pedal, apply the brakes gradually with light force, and slowly move to a safe position off the road.**

Fuel filter warning light (diesel engine)



This warning light illuminates:

- Once you set the ignition switch or Engine Start/Stop button to the ON position.
  - It illuminates for approximately 3 seconds and then goes off.
- When water has accumulated inside the fuel filter.
  In this case, remove the water from the fuel filter.

❇ For more details, refer to "Fuel filter cartridge (for diesel)" on page 8-23.

⚠ CAUTION

■ Fuel Filter Warning Light

- **When the Fuel Filter Warning Light illuminates, the engine power (vehicle speed & idle speed) may decrease.**

(Continued)

(Continued)

- **If you keep driving with the warning light on, engine parts (injector, common rail, high pressure fuel pump) may be damaged. If this occurs, have the vehicle inspected by a professional workshop as soon as possible. Kia recommends to visit an authorized Kia dealer/service partner.**

All wheel drive (AWD) warning light (if equipped)



This warning light illuminates:

- Once you set the ignition switch or Engine Start/Stop Button to the ON position.
  - It illuminates for approximately 3 seconds and then goes off.
- When there is a malfunction with the AWD system.
  In this case, have the vehicle inspected by a professional workshop as soon as possible.
  Kia recommends to visit an authorized Kia dealer/service partner.

Overspeed warning light (if equipped)



This warning light blinks:

- When you drive the vehicle more than 120 km/h.
  - This is to prevent you from driving your vehicle with overspeed.
  - The overspeed warning chime also sound for approximately 5 seconds.

Master warning mode (if equipped)



- This warning light informs the driver the following situations
  - LED head lamp malfunction (if equipped)
  - Smart Cruise Control with Stop & Go malfunction (if equipped)
  - Forward Collision-Avoidance Assist malfunction (if equipped)
  - Smart Cruise Control with Stop & Go radar blind (if equipped)
  - Blind-Spot Collision Warning radar blind (if equipped)
  - Lamp malfunction
  - High Beam Assist malfunction (if equipped)

The Master Warning Light illuminates if one or more of the above warning situations occur.
If the warning situation is solved, the master warning light will be turned off.

Icy road warning light (if equipped)



This warning light is to warn the driver he road may be icy.
When the temperature on the outside temperature gauge is approximately below 4°C (39°F), the Icy Road Warning Light and Outside Temperature Gauge 5 times blinks and then Illuminates.

✻ NOTICE

If the icy road warning light appear while driving, you should drive more attentively and safely refraining from over-speeding, rapid acceleration, sudden braking or sharp turning, etc.

Electronic parking brake (EPB) warning light (if equipped)



This warning light illuminates:

- Once you set the ignition switch or Engine Start/Stop button to the ON position.
  - It illuminates for approximately 3 seconds and then goes off.
- When there is a malfunction with the EPB.
  In this case, have the vehicle inspected by a professional workshop as soon as possible.
  Kia recommends to visit an authorized Kia dealer/service partner.

✻ NOTICE

■ Electronic Parking Brake (EPB) Warning Light

The Electronic Parking Brake (EPB) Warning Light may illuminate when the Electronic Stability control (ESC) Indicator Light comes on to indicate

(Continued)

(Continued)

that the ESC is not working properly (this does not indicate a malfunction of the EPB).

Forward collision avoidance assist system warning light (if equipped)



This indicator light illuminates:

- When there is a malfunction with the Forward Collision Avoidance Assist (FCA) system.

In this case, have the vehicle inspected by a professional workshop as soon as possible.
Kia recommends to visit an authorised Kia dealer/service partner.

LED headlamp warning light (if equipped)



This warning light illuminates:

- Once you set the Engine Start/Stop Button to the ON position.
  - It illuminates for approximately 3 seconds and then goes off.

- When there is a malfunction with the LED headlamp.

In this case, have the vehicle inspected by a professional workshop. Kia recommends to visit an authorized Kia dealer/ service partner.

This warning light blinks:

- When there is a malfunction with a LED headlamp related part.

In this case, have the vehicle inspected by a professional workshop. Kia recommends to visit an authorized Kia dealer/ service partner.

⚠ CAUTION

■ LED Headlamp Warning Light

Continuous driving with the LED Headlamp Warning Light on or blinking can reduce LED headlamp (low beam) life.

Exhaust system (DPF) warning light (diesel engine)



This warning light illuminates:

- When there is a malfunction with the Diesel Particulate Filter (DPF) system.
- When this warning light illuminates, it may turn off after driving the vehicle:
  - at more than 60 km/h (37 mph), or
  - at more than 2nd gear with 1,500 ~ 2,000 engine rpm for a certain time (for about 25 minutes).

If this warning light blinks in spite of the procedure (at this time the LCD warning message will be displayed), have the DPF system checked by a professional workshop. Kia recommends to visit an authorized Kia dealer/ service partner.

⚠ CAUTION

■ Diesel engine with DPF (if equipped)

(Continued)

(Continued)

If you continue to drive with the DPF warning light blinking for a long time, the DPF system can be damaged and fuel consumption can worsen.

Indicator lights

Electronic stability control (ESC) indicator light (if equipped)



This indicator light illuminates:

- Once you set the ignition switch or Engine Start/Stop button to the ON position.
  - It illuminates for approximately 3 seconds and then goes off.
- When there is a malfunction with the ESC system.

  In this case, have the vehicle inspected by a professional workshop as soon as possible.
  Kia recommends to visit an authorized Kia dealer/service partner.

This indicator light blinks:

While the ESC is operating.

❈ For more details, refer to "Electronic stability control (ESC) (if equipped)" on page 6-52.

Electronic stability control (ESC) OFF indicator light (if equipped)



This indicator light illuminates:

- Once you set the ignition switch or Engine Start/Stop button to the ON position.
  - It illuminates for approximately 3 seconds and then goes off.
- When you deactivate the ESC system by select the ESC OFF/ ESC OFF (TCS OFF) in the User Settings.

❈ For more details, refer to "Electronic stability control (ESC) (if equipped)" on page 6-52.

Auto stop indicator (if equipped)



This indicator will illuminate when the engine enters the Idle Stop mode of the ISG (Idle Stop and Go) system.
When the automatic starting occurs, the auto stop indicator on the cluster will blink for 5 seconds.
For more details, refer to "ISG (Idle stop and go) system" on page 6-119.

❈ NOTICE

When the engine automatically starts by the ISG system, some warning lights (ABS, ESC, ESC OFF, EPS or Parking brake warning light) may turn on for a few seconds.
This happens because of the low battery voltage. It does not mean the system is malfunctioning.

Immobilize indicator light (without smart key) (if equipped)



This indicator light illuminates:

- When the vehicle detects the immobilizer in your key properly while the ignition switch is ON.
  - At this time, you can start the engine.
  - The indicator light goes off after starting the engine.

This indicator light blinks:

- When there is a malfunction with the immobilizer system.
  In this case, have the vehicle inspected by a professional workshop as soon as possible.
  Kia recommends to visit an authorized Kia dealer/service partner.

Immobilizer indicator light (with smart key) (if equipped)



This indicator light illuminates for up to 30 seconds:

- When the vehicle detects the smart key in the vehicle properly while the Engine Start/Stop button is ACC or ON.
  - At this time, you can start the engine.
  - The indicator light goes off after starting the engine.

This indicator light blinks for a few seconds:

- When the smart key is not in the vehicle.
  - At this time, you cannot start the engine.

This indicator light illuminates for 2 seconds and goes off:

- When the vehicle can not detect the smart key which is in the vehicle while the Engine Start/Stop button is ON.
  In this case, have the vehicle inspected by a professional workshop as soon as possible.
  Kia recommends to visit an authorized Kia dealer/service partner.

This indicator light blinks:

- When the battery of the smart key is weak.
  - At this time, you can not start the engine. However, you can start the engine if you press the Engine Start/Stop button with the smart key (for more details, refer to "Starting the engine" on page 6-10).
- When there is a malfunction with the immobilizer system.
  In this case, have the vehicle inspected by a professional workshop as soon as possible.
  Kia recommends to visit an authorized Kia dealer/service partner.

Turn signal indicator light



This indicator light blinks:

- When you turn the turn signal light on.

If any of the following occurs, there may a malfunction with the turn signal system. In this case, have the vehicle inspected by a professional workshop as soon as possible.
Kia recommends to visit an authorized Kia dealer/service partner.

- The indicator light does not blink but illuminates.
- The indicator light blinks more rapidly.
- The indicator light does not illuminate at all.

High beam indicator light



This indicator light illuminates:

- When the headlights are on and in the high beam position.
- When the turn signal lever is pulled into the Flash-to-Pass position.

Low beam indicator light (if equipped)



This indicator light illuminates:

- When the headlights are on.

Light ON indicator light



This indicator light illuminates:

- When the tail lights or headlights are on.

Front fog indicator light (if equipped)



This indicator light illuminates:

- When the front fog lights are on.

Rear fog indicator light (if equipped)



This indicator light illuminates:

- When the rear fog lights are on.

High beam assist indicator (if equipped)



This warning light illuminates:

- When the high-Beam is on with the light switch in the AUTO light position.

- If your vehicle detects oncoming or preceding vehicles, the high beam assist system will switch the high beam to low beam automatically.

❇ For more details, refer to "High beam assist" on page 4-103.

Glow indicator light (diesel engine)



This indicator light illuminates:

- When the engine is being preheated with the ignition switch or Engine Start/Stop button in the ON position.
  - The engine can be started after the glow indicator light goes off.
  - The illumination time varies with the engine coolant temperature, air temperature, and battery condition.

If the indicator light remains on or blinks after the engine has warmed up or while driving, there may be a malfunction with the engine preheating system.
In this case, have the vehicle inspected by a professional workshop as soon as possible.
Kia recommends to visit an authorized Kia dealer/service partner.

❇ NOTICE

■ Engine Preheating

If the engine does not start within 10 seconds after the preheating is completed, set the ignition switch or Engine Start/Stop button to the LOCK or OFF position for 10 seconds and then to the ON position in order to preheat the engine again.

LKA (Lane Keeping Assist) indicator (if equipped)



The LKA indicator will illuminate when you turn the lane keeping assistant system on by pressing the LKA button.
If there is a problem with the system, the yellow LKA indicator will illuminate.

❇ For more details, refer to "Lane Keeping Assist" on page 4-84.

All wheel drive (AWD) LOCK indicator light (if equipped)



This indicator light illuminates:

- Once you set the ignition switch or Engine Start/Stop Button to the ON position.
  - It illuminates for approximately 3 seconds and then goes off.
- When you select AWD Lock mode by pressing the AWD LOCK button.
  - The AWD LOCK mode is to increase the drive power when driving on wet pavement, snow covered roads and/or off-road.

⚠ CAUTION

■ AWD Lock Mode

Do not use AWD LOCK mode on dry paved roads or highway, it can cause noise, vibration or damage of AWD related parts.

Cruise indicator light (if equipped)



This indicator light illuminates:

- When the cruise control system is enabled.



✻ For more details, refer to "Cruise control system (if equipped)" on page 6-86.

AUTO HOLD indicator light (if equipped)



This indicator light illuminates:

[White]: When you activate the auto hold system by pressing the AUTO HOLD button.

[Green]: When you stop the vehicle completely by depressing the brake pedal with the auto hold system activated.

[Yellow]: When there is a malfunction with the auto hold system.
In this case, have the vehicle inspected by a professional workshop as soon as possible.
Kia recommends to visit an authorized Kia dealer/service partner.

✻ For more details, refer to "AUTO HOLD (if equipped)" on page 6-48.

Downhill Brake Control (DBC) Indicator Light (if equipped)



This warning light illuminates:

- Once you set the ignition switch or Engine Start/Stop Button to the ON position.
  - It illuminates for approximately 3 seconds and then goes off.
- When you activate the DBC system by pressing the DBC button.

This warning light blinks:

- When the DBC is operating.

This warning light illuminates yellow:

- When there is a malfunction with the DBC system.
  In this case, have the vehicle inspected by a professional workshop as soon as possible.
  Kia recommends to visit an authorized Kia dealer/service partner.

✻ For more details, refer to "Downhill Brake Control (DBC) (if equipped)" on page 6-82.

PARKING DISTANCE WARNING-REVERSE (IF EQUIPPED)



Parking distance warning-reverse the driver during backward movement of the vehicle by chiming if any object is sensed within a distance of 120 cm (47 in.) behind the vehicle.
This system is a supplemental system and it is not intended to nor does it replace the need for extreme care and attention of the driver. The sensing range and objects detectable by the back sensors are limited. Whenever backing-up, pay as much attention to what is behind you as you would in a vehicle without a rear parking assist system.

⚠ WARNING

The parking distance warning-reverse is a supplementary function only. The operation of the parking distance warning-reverse can be affected by several factors (including environmental conditions). It is the responsibility of the driver to always check the area behind the vehicle before and while backing up.

Operation of the parking distance warning-reverse

Operating condition

- This system will activate when the indicator on the parking distance warning-reverse OFF button is not illuminated. If you desire to deactivate the parking distance warningreverse, press the distance warning- reverse OFF button again. (The indicator on the button will illuminate.) To turn the system on, press the button again. (The indicator on the button will go off.)
- This system will activate when backing up with the ignition switch ON.
  If the vehicle is moving at a speed over 5 km/h (3 mph), the system may not be activated correctly.
- The sensing distance while the parking distance warning-reverse is in operation is approximately 120 cm (47 in.).

- When more than two objects are sensed at the same time, the closest one will be recognized first.

Types of warning sound	Indicator*
When an object is 120 cm to 61 cm (47 in. to 24 in.) from the rear bumper: Buzzer beeps intermittently.	
When an object is 60 cm to 31 cm (23 in. to 12 in.) from the rear bumper: Buzzer beeps more frequently.	
When an object is within 30 cm (11 in.) of the rear bumper: Buzzer sounds continuously.	

* : if equipped

✻ NOTICE

The indicator may differ from the illustration as objects or sensors status.
If the indicator blinks, have the system checked by a professional workshop. Kia recommends to visit an authorized Kia dealer/service partner.

Non-operational conditions of parking distance warning - reverse

The parking distance warning-reverse may not operate properly when:

1. Moisture is frozen to the sensor. (It will operate normally when the moisture has been cleared.)
2. The sensor is covered with foreign matter, such as snow or water, or the sensor cover is blocked. (It will operate normally when the material is removed or the sensor is no longer blocked.)
3. Driving on uneven road surfaces (unpaved roads, gravel, bumps, gradient).
4. Objects generating excessive noise (vehicle horns, loud motorcycle engines, or truck air brakes) are within range of the sensor.
5. Heavy rain or water spray exists.
6. Wireless transmitters or mobile phones are within range of the sensor.
7. The sensor is covered with snow.
8. Trailer towing

The detecting range may decrease when:

1. The sensor is stained with foreign matter such as snow or water (the sensing range will return to normal when removed).
2. The outside air temperature is extremely hot or cold.

The following objects may not be recognized by the sensor:

1. Sharp or slim objects such as ropes, chains or small poles.
2. Objects which tend to absorb the sensor frequency such as clothes, spongy material or snow.
3. Undetectable objects smaller than 1 m (40 in.) in height and narrower than 14 cm (6 in.) in diameter.

Parking distance warning - reverse precautions

- The parking distance warning-reverse may not sound consistently depending on the speed and shapes of the objects detected.
- The parking distance warning-reverse may malfunction if the vehicle bumper height or sensor installation has been modified or damaged. Any non-factory installed equipment or accessories may also interfere with the sensor performance.
- The sensor may not recognize objects less than 30 cm (11 in.) from the sensor, or it may sense an incorrect distance. Use caution.
- When the sensor is frozen or stained with snow, dirt, or water, the sensor may be inoperative until the stains are removed using a soft cloth.
- Do not push, scratch or strike the sensor. Sensor damage could occur.

✻ NOTICE

This system can only sense objects within the range and location of the sensors; It cannot detect objects in other areas where sensors are not installed. Also, small or slim objects, such as poles or objects located between sensors may not be detected by the sensors.
Always visually check behind the vehicle when backing up.
Be sure to inform any drivers of the vehicle that may be unfamiliar with the system regarding the systems capabilities and limitations.

⚠ WARNING

Pay close attention when the vehicle is driven close to objects on the road, particularly pedestrians, and especially children. Be aware that some objects may not be detected by the sensors, due to the object's distance, size or material, all of which can limit the effectiveness of the sensor.

(Continued)

(Continued)

Always perform a visual inspection to make sure the vehicle is clear of all obstructions before moving the vehicle in any direction.

Self-diagnosis

If you don't hear an audible warning sound or if the buzzer sounds intermittently when shifting the gear to the R (Reverse) position, this may indicate a malfunction in the parking distance warning-reverse. If this occurs, have the system checked by a professional workshop. Kia recommends to visit an authorized Kia dealer/ service partner.

⚠ WARNING

Your new vehicle warranty does not cover any accidents or damage to the vehicle or injuries to its occupants due to a parking distance warning-reverse malfunction. Always drive safely and cautiously.

PARKING DISTANCE WARNING (IF EQUIPPED)

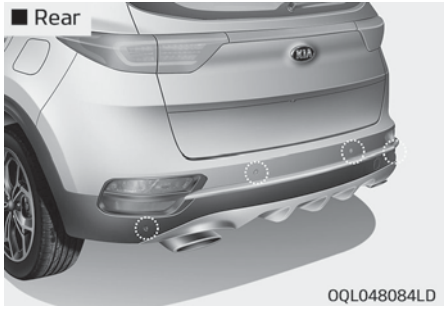



The parking distance warning-forward assists the driver during movement of the vehicle by chiming if any object is sensed within the distance of 100 cm(39 in.) in front and 120 cm(47 in.) behind the vehicle.

This system is a supplemental system and it is not intended to nor does it replace the need for extreme care and attention of the driver.
The sensing range and objects detectable by the sensors are limited. Whenever moving pay as much attention to what is in front and behind of you as you would in a vehicle without a parking distance warning- forward.

⚠ WARNING

The parking distance warning-forward should only be considered as a supplementary function. The driver must check the front and rear view. The operational function of the parking distance warning-forward can be affected by many factors and conditions of the surroundings, so the responsibility rests always with the driver.

Operation of the parking distance warning - forward

Operating condition

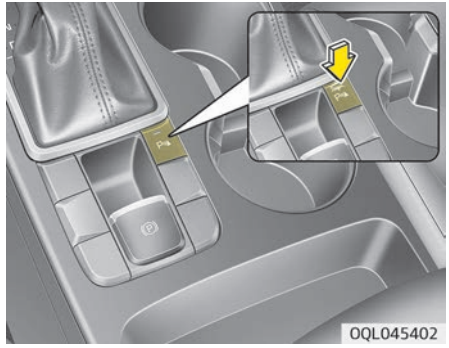

- This system activates when the parking distance warning-forward button is pressed with the ignition switch ON.
- The indicator of the parking distance warning-forward button turns on automatically and activates the parking distance warning-forward when you shift the gear to the R (Reverse) position. It will turn off automatically when you drive above 30 km/h (18.6 mph).

- The sensing distance while backing up is approximately 120 cm (47 in.) when you are driving less than 10 km/h (6.2 mph).
- The sensing distance while moving forward is approximately 100 cm (39 in.) when you are driving less than 10 km/h (6.2 mph).
- When more than two objects are sensed at the same time, the closest one will be recognized first.
- The side sensors are activated when you shift the gear to the R (Reverse) position.
- If the vehicle speed is above 20 km/h, the system automatically turns off. To activate again, push the button.

✻ NOTICE

It may not operate if its distance from the object is already less than approximately 25 cm when the system is ON.

Type of warning indicator and sound

■ : with warning sound

Distance from object		Warning indicator		Warning sound
		When driving forward	When driving rearward	
100 cm~61 cm	Front		-	Buzzer beeps intermittently
120 cm~61 cm	Rear	-		Buzzer beeps intermittently
60 cm~31 cm	Front			Buzzer beeps frequently
	Rear	-		Buzzer beeps frequently
30 cm	Front			Buzzer sounds continuously
	Rear	-		Buzzer sounds continuously

✻ NOTICE

- The actual warning sound and indicator may differ from the illustration according to objects or sensor status.
- Do not wash the vehicle's sensor with high pressure water.

⚠ CAUTION

- **This system can only sense objects within the range and location of the sensors.**
  It cannot detect objects in other areas where sensors are not installed. Also, small or slim objects, such as poles or objects located between sensors may not be detected by the sensors.
  Always visually check behind the vehicle when backing up.
- **Be sure to inform any drivers of the vehicle that may be unfamiliar with the system regarding the systems capabilities and limitations.**

Non-operational conditions of parking distance warning - forward

Parking distance warning-forward may not operate normally when:

1. Moisture is frozen to the sensor. (It will operate normally when moisture melts.)
2. Sensor is covered with foreign matter, such as snow or water, or the sensor cover is blocked. (It will operate normally when the material is removed or the sensor is no longer blocked.)
3. The parking distance warning-forward button is off.

There is a possibility of parking distance warning-forward malfunction when:

1. Driving on uneven road surfaces such as unpaved roads, gravel, bumps, or gradient.
2. Objects generating excessive noise such as vehicle horns, loud motorcycle engines, or truck air brakes can interfere with the sensor.
3. Heavy rain or water spray.

4. Wireless transmitters or mobile phones present near the sensor.
5. Sensor is covered with snow.

Detecting range may decrease when:

1. Outside air temperature is extremely hot or cold.
2. Undetectable objects smaller than 1 m and narrower than 14 cm in diameter.

The following objects may not be recognized by the sensor:

1. Sharp or slim objects such as ropes, chains or small poles.
2. Objects, which tend to absorb sensor frequency such as clothes, spongy material or snow.

✻ NOTICE

1. The warning may not sound sequentially depending on the speed and shapes of the objects detected.

(Continued)

(Continued)

2. The parking distance warning-forward may malfunction if the vehicle bumper height or sensor installation has been modified. Any non-factory installed equipment or accessories may also interfere with the sensor performance.
3. Sensor may not recognize objects less than 30 cm from the sensor, or it may sense an incorrect distance. Use with caution.
4. When the sensor is frozen or stained with snow or water, the sensor may be inoperative until the stains are removed using a soft cloth.
5. Do not push, scratch or strike the sensor with any hard objects that could damage the surface of the sensor. Sensor damage could occur.

✻ NOTICE

This system can only sense objects within the range and location of the sensors, it can not detect objects in other areas where sensors are not installed. Also, small or slim objects, or objects located between sensors may not be detected.
Always visually check in front and behind the vehicle when driving.
Be sure to inform any drivers in the vehicle that may be unfamiliar with the system regarding the systems capabilities and limitations.

⚠ WARNING

Pay close attention when the vehicle is driven close to objects on the road, particularly pedestrians, and especially children. Be aware that some objects may not be detected by the sensors, due to the object's distance, size or material, all of which can limit the effectiveness of the sensor. Always perform a visual inspection

(Continued)

(Continued)

to make sure the vehicle is clear of all obstructions before moving the vehicle in any direction.

Self-diagnosis

When you shift the gear to the R (Reverse) position and if one or more of the below occurs you may have a malfunction in the rear parking assist system.

- You don't hear an audible warning sound or if the buzzer sounds intermittently.
-  (blinks) is displayed (if equipped).

If this occurs, have the system checked by a professional workshop. Kia recommends to visit an authorized Kia dealer/service partner.

⚠ WARNING

Your new vehicle warranty does not cover any accidents or damage to the vehicle or injuries to its occupants related to a parking assist system. Always drive safely and cautiously.

REARVIEW MONITOR (IF EQUIPPED)

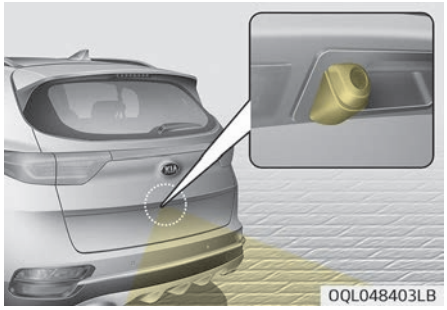

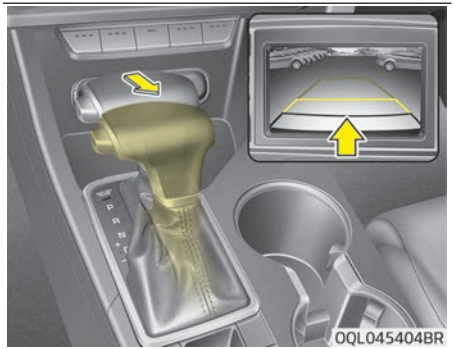

The rearview monitor will activate when the back-up light is ON with the ignition switch ON and the shift lever in the R (Reverse) position.

This system is a supplemental system that shows behind the vehicle through the rearview display mirror while backing-up.

⚠ WARNING

- **This system is a supplementary function only. It is the responsibility of the driver to always check the inside/outside rearview mirror and the area behind the vehicle before and while backing up because there is a dead zone that can't be seen through the camera.**
- **Always keep the camera lens clean. If lens is covered with foreign matter, the camera may not operate normally.**

✻ If your vehicle is equipped with AVN(Audio, Video and Navigation) system, rearview display will show behind the vehicle through the AVN monitor while backing-up. Refer to a separately supplied manual for detailed information.

LIGHTING

Battery saver function

- The purpose of this feature is to prevent the battery from being discharged. The system automatically turns off the parking lights when the driver removes the ignition key and opens the driver-side door.
- With this feature, the parking lights will turn off automatically if the driver parks on the side of the road at night.
  If necessary, to keep the lights on when the ignition key is removed, perform the following:
  - Open the driver-side door.
  - Turn the parking lights OFF and ON again using the light switch on the steering column.

⚠ CAUTION

If the driver gets out of the vehicle through other doors (except the driver's door), the battery saver function does not operate. Therefore, it causes the battery to be discharged. In this case, make sure to turn off the lamp before getting out of the vehicle.

Headlight escort function (if equipped)

If you turn the ignition switch to the ACC or OFF position with the headlights ON, the headlights remain on for about 5 minutes. However, if the driver's door is opened and closed, the headlights are turned off after 15 seconds.
The headlights can be turned off by pressing the lock button on the transmitter (or smart key) twice or turning the light switch to the OFF position.

Daytime running light (if equipped)

The Daytime Running Lights (DRL) can make it easier for others to see the front of your vehicle during the day. DRL can be helpful in many different driving conditions, and it is especially helpful after dawn and before sunset.
The DRL system turns OFF when:

1. The headlight or fog lamp switch is ON.
2. The engine is OFF.
3. The front fog light is ON.
4. Engaging the Parking Brake.

Traffic Change (For Europe)

The low beam light distribution is asymmetric. If you go abroad to a country with opposite traffic direction, this asymmetric part will dazzle oncoming car drivers. To prevent dazzle, ECE regulation demand several technical solutions (ex. automatic change system, adhesive sheet, down aiming). These headlamps are designed not to dazzle opposite drivers. So, you need not change your headlamps in a country with opposite traffic direction.

Lighting control

■ Type A

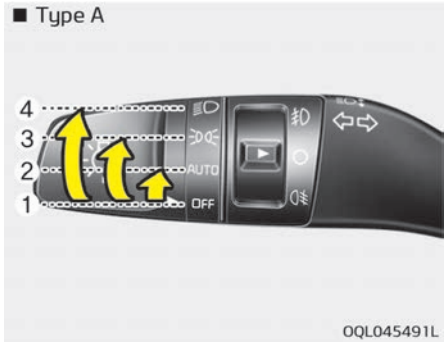

OQL045491L

■ Type B



OUM044053L

The light switch has a headlight and a parking light position.

To operate the lights, turn the knob at the end of the control lever to one of the following positions:

1. OFF position
2. Auto light
3. Parking light position
4. Headlight position

Position light position ( )

■ Type A

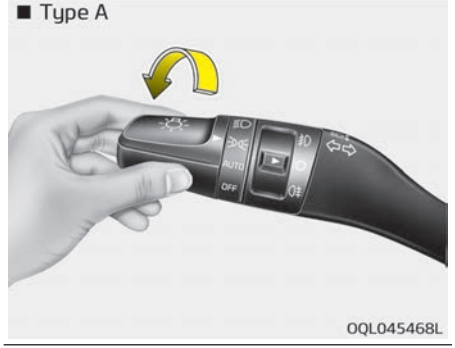

OQL045468L

■ Type B



OQL048549L

When the light switch is in the parking light position (3rd position), the tail, license and instrument panel lights will turn ON.

Headlight position

■ Type A

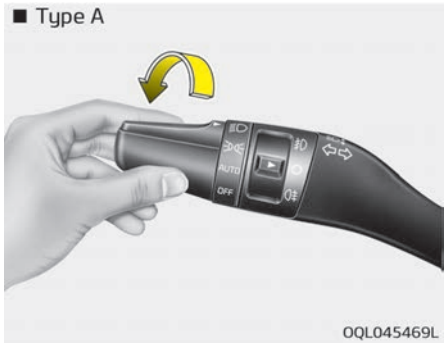

OQL045469L

■ Type B



OUM044217L

When the light switch is in the headlight position (4th position), the head, tail, license and instrument panel lights will turn ON.

✻ NOTICE

The ignition switch must be in the ON position to turn on the headlights.

Auto light (if equipped)

■ Type A

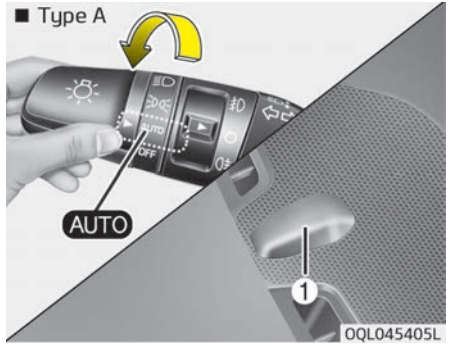

OQL045405L

■ Type B

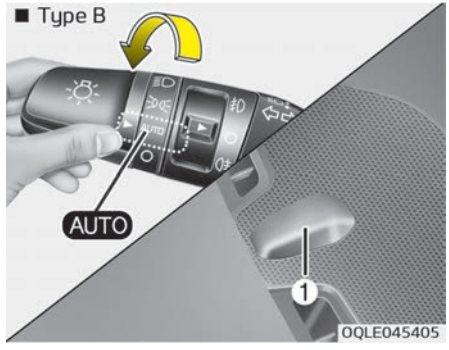

OQLE045405

When the light switch is in the AUTO light position, the taillights and headlights will be turned ON or OFF automatically depending on the amount of light outside the vehicle.

⚠ CAUTION

- **Never place anything over the sensor (1) located on the instrument panel. This will ensure better auto-light system control**
- **Don't clean the sensor using a window cleaner. The cleaner may leave a light film which could interfere with sensor operation.**
- **If your vehicle has window tint or other types of metallic coating on the front windshield, the Auto light system may not work properly.**

High beam operation

■ Type A

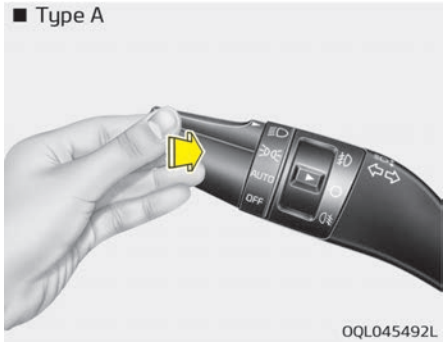

OQL045492L

■ Type B

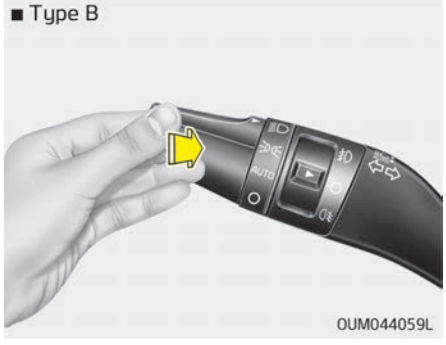

OUM044059L

To turn on the high beam headlamp, push the lever away from you. The lever will return to its original position.

The high beam indicator will light when the headlight high beams are switched on.
To turn off the high beam headlamp, pull the lever to you when the high beam is on. The lever will return to its original position.
To prevent the battery from being discharged, do not leave the lights on for a prolonged time while the engine is not running.

⚠ WARNING

Do not use the high beam when there are other vehicles. Using the high beam could obstruct the other driver's vision.

■ Type A



OQL045493L

■ Type B

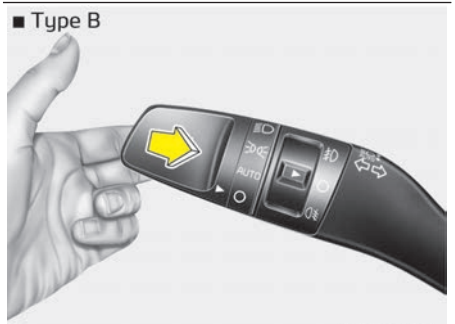

OUM044058L

To flash the headlights, pull the lever towards you. It will return to the normal (low beam) position when released. The headlight switch does not need to be on to use this flashing feature.

Turn signals and lane change signals

■ Type A

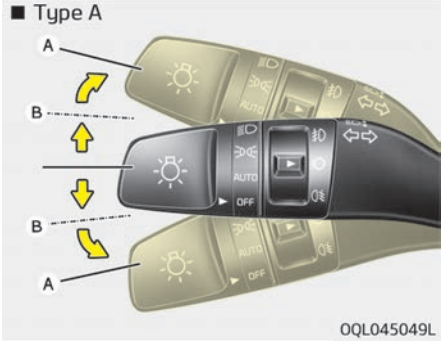

OQL045049L

■ Type B

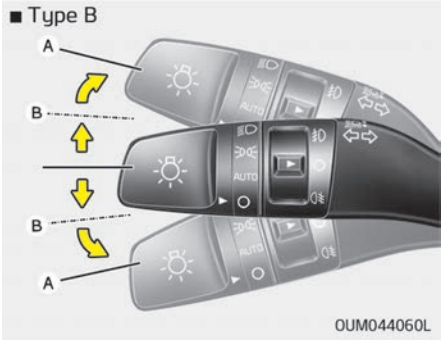

OUM044060L

The ignition switch must be on for the turn signals to function. To turn on the turn signals, move the lever up or down (A). The green arrow indicators on the instrument panel indicate which turn signal is operating.
They will self-cancel after a turn is completed. If the indicator continues to flash after a turn, manually return the lever to the OFF position.
To signal a lane change, move the turn signal lever slightly and hold it in position (B). The lever will return to the OFF position when released.
If an indicator stays on and does not flash or if it flashes abnormally, one of the turn signal bulbs may be burned out and will require replacement.

One-touch lane change function (if equipped)

To activate a one-touch lane change function, move the turn signal lever slightly for less than 0.7 seconds and then release it. The lane change signals will blink 3 times.

✻ NOTICE

If an indicator flash is abnormally quick or slow, a bulb may be burned out or have a poor electrical connection in the circuit.

Front fog light (if equipped)



Fog lights are used to provide improved visibility when visibility is poor due to fog, rain or snow, etc. The fog lights will turn on when the fog light switch (1) is turned on after the parklight is turned on.

To turn off the fog lights, turn the fog light switch (1) to the O (OFF) position.

⚠ CAUTION

When in operation, the fog lights consume large amounts of vehicle electrical power. Only use the fog lights when visibility is poor.

Rear fog light (if equipped)



To turn the rear fog lights on, turn the headlight switch to the headlight on position and turn the rear fog light switch (1) to the on position.

The rear fog lights turn on when the rear fog light switch is turned on after the front fog light switch is turned on and the headlight switch is in the parklight position.
To turn the rear fog lights off, turn the rear fog light switch to the on position again or turn the headlight switch off.

✻ NOTICE

To turn on the rear fog light switch, the ignition switch must be in the ON position.

Headlight leveling device (if equipped)

Manual type



To adjust the headlight beam level according to the number of passengers and the loading weight in the luggage area, turn the beam leveling switch.
The higher the number of the switch position, the lower the headlight beam level. Always keep the headlight beam at the proper leveling position, or the headlights may dazzle other road users.

Listed below are the examples of proper switch settings. For loading conditions other than those listed below, adjust the switch position so that the beam level may be the nearest as the condition obtained according to the list.

Loading condition	Switch position
Driver only	0
Driver + Front passenger	0
Driver + Full passengers	1
Full passengers (including driver) + Maximum permissible loading	2
Driver + Maximum permissible loading	3

Automatic type

It automatically adjusts the headlight beam level according to the number of passengers and the loading weight in the luggage area.
And it offers proper headlight beam under various conditions.

⚠ WARNING

If it does not work properly even though your car is inclined backward according to passenger's posture, or the headlight beam is irradiated to the high or low position, have the system inspected by a professional workshop. Kia recommends to visit an authorized Kia dealer/service partner.
Do not attempt to inspect or replace the wiring yourself.

High beam assist (if equipped)

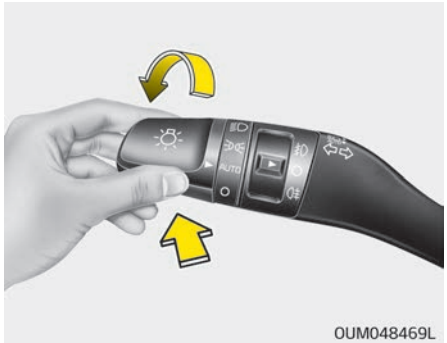

The High Beam Assist is a system that automatically adjusts the headlamp range (switches between high beam and low beam) according to the brightness of other vehicles and road conditions.

Operating condition

1. Place the light switch in the AUTO position.
2. Turn on the high beam by pushing the lever away from you.
   The High Beam Assist (AUTO) indicator will illuminate.
3. The High Beam Assist will turn on when vehicle speed is above 40 kph (25 mph).
   - If the lever is pushed away when the High Beam Assist is operating, the High Beam Assist will turn off and the high beam will be on continuously. The High Beam Assist (AUTO) indicator will turn off.
   - If the lever is pulled towards you when the high beam is on with operating High Beam Assist, the High Beam Assist will turn off.
4. If the light switch is placed to the headlamp position, the High Beam Assist will turn off and the low beam will be on continuously.

The high beam switches to low beam in the below conditions.

- When the High Beam Assist is off.
- When the light switch is not in the AUTO position.
- When the headlamp is detected from the on-coming vehicle.
- When the tail lamp is detected from the front vehicle.
- When the surrounding is bright enough high beams are not needed.
- When streetlights or other lights are detected.
- When vehicle speed is below 30 km/h (19 mph).
- When headlamp / taillamp of bicycle/ motorcycle is detected.

Warning light and message

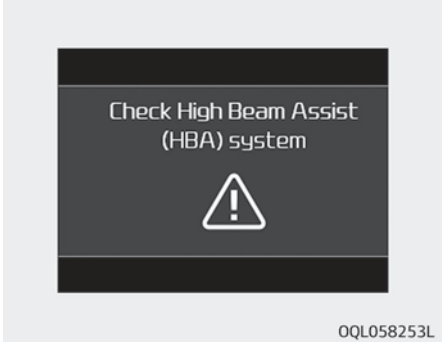

When the Smart High Beam Assist System is not working properly, the warning message will come on for a few second. After the message disappears, the master warning light (⚠) will illuminate.

If the problem is not solved. contact a professional workshop. Kia recommends to visit an authorized Kia dealer/ service partner.

⚠ CAUTION

The system may not operate normally in the below conditions.

- **When the light from the oncoming or front vehicle is not detected because of lamp damage, hidden from sight, etc.**
- **When the lamp of the on-coming or front vehicle is covered with dust, snow or water.**
- **When the light from the oncoming or front vehicle is not detected because of exhaust fume, smoke, fog, snow, etc.**
- **When the front window is covered with foreign matters such as ice, dust, fog, or is damaged.**
- **When there is a similar shape lamp with the front vehicle's lamps.**
- **When it is hard to see because of fog, heavy rain or snow.**

(Continued)

(Continued)

- **When the headlamp is not repaired or replaced at an authorized dealer.**
- **When headlamp aiming is not properly adjusted.**
- **When driving on a narrow curved road or rough road.**
- **When driving downhill or uphill.**
- **When only part of the vehicle in front is visible on a crossroad or curved road.**
- **When there is a traffic light, reflecting sign, flashing sign or mirror.**
- **When the road conditions are bad such as being wet or covered with snow.**
- **When the front vehicle's headlamps are off but the fog lamps on.**
- **When a vehicle suddenly appears from a curve.**
- **When the vehicle is tilted from a flat tire or being towed.**

(Continued)

(Continued)

- **When the LDW (lane departure warning) or LKA (Lane keeping assist) warning light illuminates. (if equipped)**

⚠ WARNING

- **Do not place any accessories, stickers or tint the windshield.**
- **Have the windshield glass replaced from an authorized dealer.**
- **Do not remove or impact related parts of the High Beam Assist system.**
- **Be careful that water doesn't get into the High Beam Assist unit.**
- **Do not place objects on the dashboard that reflects light such as mirrors, white paper, etc. The system may malfunction if sunlight is reflected.**

(Continued)

(Continued)

- **At times, the Smart High Beam system may not work properly, always check the road conditions for your safety. When the system does not operate normally, manually change between the high beam and low beam.**

WIPERS AND WASHERS

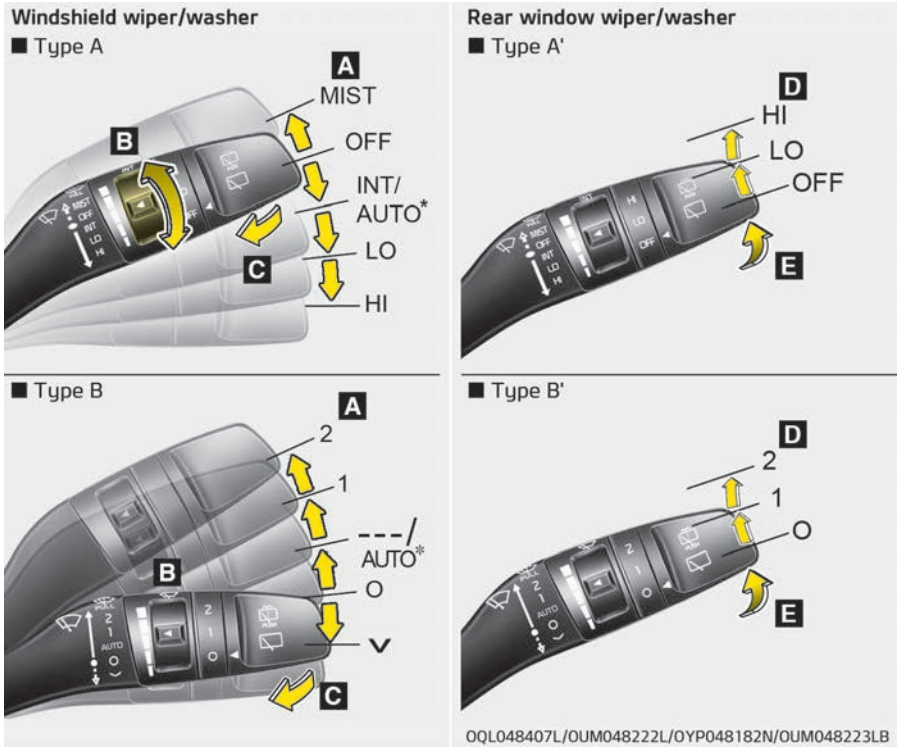

A: Wiper speed control (front)

- MIST / ⩛ – Single wipe
- OFF / O – Off
- INT / --- – Intermittent wipe
  AUTO* – Auto control wipe
- LO / 1 – Low wiper speed
- HI / 2 – High wiper speed

B: Intermittent control wipe time adjustment

C : Wash with brief wipes (front) *

D : Rear wiper/washer control *

- HI / 2 – Continuous wipe
- LOW / 1 – Intermittent wipe*
- OFF / O – Off

E : Wash with brief wipes (rear) *

Windshield wipers

Operates as follows when the ignition switch is turned ON.

- MIST / ⩛: For a single wiping cycle, move the lever to this (MIST/⩛) position and release it. The wipers will operate continuous-

*if equipped

ly if the lever is held in this position.

- OFF / 0: Wiper is not in operation.
- INT / ---: Wiper operates intermittently at the same wiping intervals. Use this mode in a light rain or mist. To vary the speed setting, turn the speed control knob.
- LO / 1: Normal wiper speed
- HI / 2: Fast wiper speed

✻ NOTICE

If there is heavy accumulation of snow or ice on the windshield, defrost the windshield for about 10 minutes, or until the snow and/or ice is removed before using the windshield wipers to ensure proper operation. If you do not remove the snow and/or ice before using the wiper and wash-er, it may damage the wiper and washer system.

Auto control (if equipped)

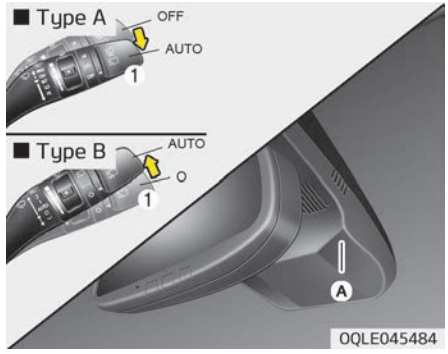

The rain sensor located on the upper end of the windshield glass senses the amount of rainfall and controls the wiping cycle for the proper interval. The more it rains, the faster the wiper operates. When the rain stops, the wiper stops.
To vary the speed setting, turn the speed control knob (1).
If the wiper switch is set in AUTO mode when the ignition switch is ON, the wiper will operate once to perform a self-check of the system. Set the wiper to OFF (0) position when the wiper is not in use.

⚠ CAUTION

When the ignition switch is ON and the windshield wiper switch is placed in the AUTO mode, use caution in the following situations to avoid any injury to the hands or other parts of the body:

- **Do not touch the upper end of the windshield glass facing the rain sensor.**
- **Do not wipe the upper end of the windshield glass with a damp or wet cloth.**
- **Do not put pressure on the windshield glass.**

⚠ CAUTION

- **When washing the vehicle, set the wiper switch in the OFF (0) position to stop the auto wiper operation.**
  The wiper may operate and be damaged if the switch is set in the AUTO mode while washing the vehicle.

(Continued)

(Continued)

- **Do not remove the sensor cover located on the upper end of the passenger side windshield glass. Damage to system parts could occur and may not be covered by your vehicle warranty.**
- **When starting the vehicle in winter, set the wiper switch in the OFF (0) position. Otherwise, wipers may operate and ice may damage the windshield wiper blades. Always remove all snow and ice and defrost the windshield properly prior to operating the windshield wipers.**
- **When tinting the windshield, be careful of any fluid getting into the sensor located in the top center of the front windshield. It may damage the related parts.**

Windshield washers

■ Type A



■ Type B



In the OFF (0) position, pull the lever gently toward you to spray washer fluid on the windshield and to run the wipers 1-3 cycles.
Use this function when the windshield is dirty.
The spray and wiper operation will continue until you release the lever.
If the washer does not work, check the washer fluid level. If the fluid level is not sufficient, you will need to add appropriate non-abrasive windshield washer fluid to the washer reservoir.

The reservoir filler neck is located in the front of the engine compartment on the passenger side.

⚠ CAUTION

To prevent possible damage to the washer pump, do not operate the washer when the fluid reservoir is empty.

⚠ WARNING

Do not use the washer in freezing temperatures without first warming the windshield with the defrosters; the washer solution could freeze on the windshield and obscure your vision.

⚠ CAUTION

- **To prevent possible damage to the wipers or windshield, do not operate the wipers when the windshield is dry.**

(Continued)

(Continued)

- **To prevent damage to the wiper blades, do not use gasoline, kerosene, paint thinner, or other solvents on or near them.**
- **To prevent damage to the wiper arms and other components, do not attempt to move the wipers manually.**
- **To prevent possible damage to the wipers and washer system, use anti-freezing washer fluids in the winter season or cold weather.**

Headlight washer (if equipped)

If your vehicle is equipped with the headlight washer it will operate at the same time when you operate the windshield washer. However, if this function is operated once, the headlight washer will not operate within 15 minutes. It will operate when the headlight is ON and the ignition switch or engine start/stop button is in the ON position.
The washer fluid will be sprayed on to the headlights.

✻ NOTICE

- Check the headlight washers periodically to confirm that the washer fluid is being sprayed properly onto the headlight lenses.
- The headlight washer can be operated 15 minutes after being operated last time.

Rear window wiper and washer switch

■ Type A



OYP047378L

■ Type B



OYP048450L

The rear window wiper and washer switch is located at the end of the wiper and washer switch lever. Turn the switch to the desired position to operate the rear wiper and washer.

HI / 2	Normal wiper operation
LOW / 1	Intermittent wiper operation (if equipped)
OFF / O	Wiper is not in operation

■ Type A



OYP047379L

■ Type B



OYP048451L

Push the lever away from you to spray rear washer fluid and to run the rear wipers 1~3 cycles. The spray and wiper operation will continue until you release the lever.

INTERIOR LIGHT

⚠ CAUTION

Do not use the interior lights for extended periods when the engine is not running. It may cause battery discharge.

⚠ WARNING

Do not use the interior lights when driving in the dark. Accidents could happen because the view may be obscured by interior lights.

Automatic turn off function (if equipped)

The interior lights automatically turn off approximately 20 minutes after the ignition switch is turned off.
If your vehicle is equipped with the theft alarm system, the interior lights automatically turns off approximately 5 seconds after the system is armed stage.

Map lamp

■ Type A

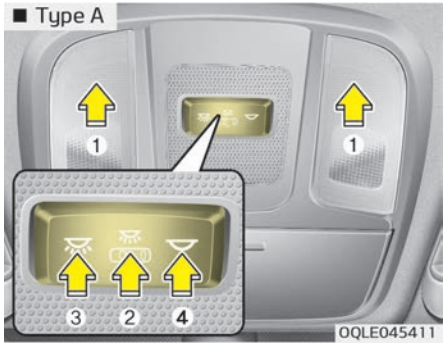

■ Type B

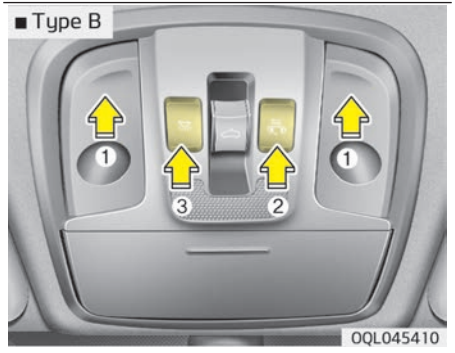

- (1): Press the lamps to turn the front map lamps on and off.
- (2):
  - The map lamp and room lamp come on when a door is opened. The lamps go out after approximately 30 seconds.
  - The map lamp and room lamp come on for approximately 30 seconds when doors are unlocked with a transmitter or smart key as long as the doors are not opened.
  - The map lamp and room lamp will stay on for approximately 20 minutes if a door is opened with the ignition switch in the ACC or LOCK/OFF position.
  - The map lamp and room lamp will stay on continuously if the door is opened with the ignition switch in the ON position.
  - The map lamp and room lamp will go out immediately if the ignition switch is changed to the ON position or all doors are locked.
  - To turn off the DOOR mode, press the DOOR button (2) once again (not pressed).

✻ NOTICE

The DOOR mode and ROOM mode can not be selected at a time.

Front Room Lamp:

- Type A

  (3): Press this switch to turn the front and rear room lamps on.

  (4): Press this switch to turn the front and rear room lamps off.

- Type B

  (3): Press this switch to turn the front and rear room lamps on and off.

Room lamp

■ Type A

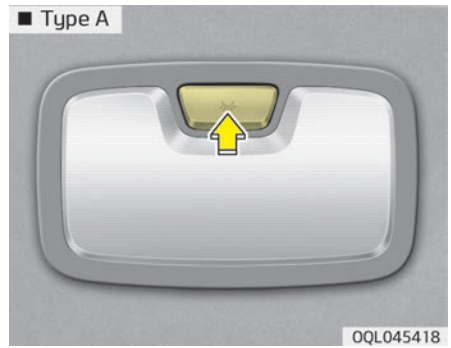

■ Type B

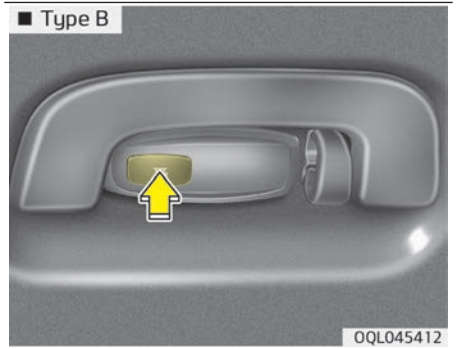

: The light stays on at all times.

Tailgate room lamp

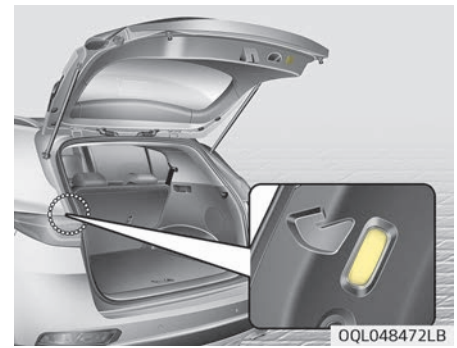

The tailgate room lamp comes on when the tailgate is opened.

✻ NOTICE

The tailgate lamp comes on as long as the tailgate lid is open. To prevent unnecessary charging system drain, close the tailgate lid securely after using the tailgate.

Glove box lamp (if equipped)

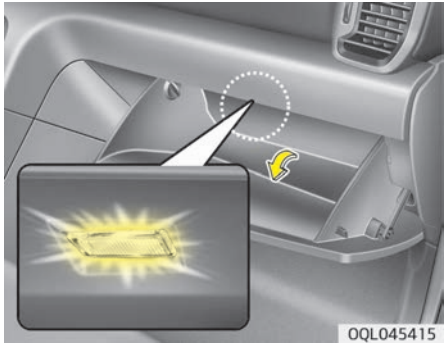

The glove box lamp comes on when the glove box is opened.

⚠ CAUTION

To prevent unnecessary charging system drain, close the glove box securely after using the glove box.

Vanity mirror lamp (if equipped)

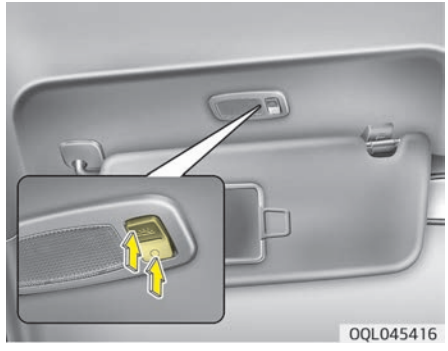

Push the switch to turn the light on or off.

: The lamp will turn on if this button is pressed.

: The lamp will turn off if this button is pressed.

⚠ CAUTION

■ Vanity mirror lamp
(Continued)

(Continued)

Always have the switch in the off position when the vanity mirror lamp is not in use. If the sunvisor is closed without the lamp off, it may discharge the battery or damage the sunvisor.

WELCOME SYSTEM (IF EQUIPPED)

Welcome light (if equipped)



When all the doors (and tailgate) are locked and closed, the room lamp will come on for about 15 seconds if any of the below is performed.

- Without the smart key system
  - When the door unlock button is pressed on the transmitter.
- With the smart key system
  - When the driver approaches the vehicle with the smart key in possession with the welcome mirror, light function selected from the user settings.

Escort welcome (if equipped)

When the headlight (light switch in the headlight or AUTO position) is on and all doors (and tailgate) are locked and closed, the position light and headlight will come on for 15 seconds if any of the below is performed.

- Without the smart key system
  - When the door unlock button is pressed on the transmitter.
- With the smart key system
  - When the door unlock button is pressed on the smart key.

At this time, if you press the door lock or unlock button, the position light and headlight will turn off immediately.

Interior light

When the interior light switch is in the DOOR position and all doors (and tailgate) are locked and closed, the room lamp will come on for 30 seconds if any of the below is performed.

- Without the smart key system
  - When the door unlock button is pressed on the transmitter.
- With the smart key system
  - When the door unlock button is pressed on the smart key.
  - When the button of the outside door handle is pressed.

At this time, if you press the door lock or unlock button, the lamps will turn off immediately.

DEFROSTER

⚠ CAUTION

To prevent damage to the conductors bonded to the inside surface of the rear window, never use sharp instruments or window cleaners containing abrasives to clean the window.

✻ NOTICE

If you want to defrost and defog the front windshield, refer to "Windshield defrosting and defogging" on page 4-135.

Rear window defroster

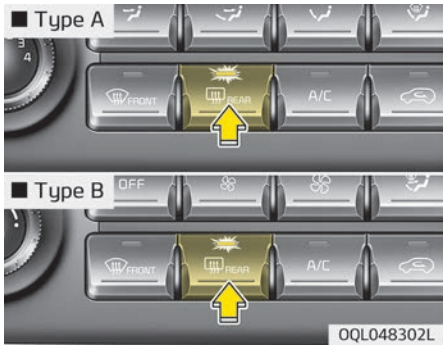

The defroster heats the window to remove frost, fog and thin ice from the rear window, while the engine is running.
To activate the rear window defroster, press the rear window defroster button located in the center facia switch panel. The indicator on the rear window defroster button illuminates when the defroster is ON.
If there is heavy accumulation of snow on the rear window, brush it off before operating the rear defroster.

The rear window defroster automatically turns off after approximately 20 minutes or when the ignition switch is turned off. To turn off the defroster, press the rear window defroster button again.

Outside rearview mirror defroster (if equipped)

If your vehicle is equipped with the outside rearview mirror defrosters, they will operate at the same time you turn on the rear window defroster.

System operation

Ventilation

1. Set the mode to the position.
2. Set the air intake control to the outside (fresh) air position.
3. Set the temperature control to the desired position.
4. Set the fan speed control to the desired speed.

Heating

1. Set the mode to the position.
2. Set the air intake control to the outside (fresh) air position.
3. Set the temperature control to the desired position.
4. Set the fan speed control to the desired speed.
5. If dehumidified heating is desired, turn the air conditioning system (if equipped) on.

Operation tips

- To keep dust or unpleasant fumes from entering the vehicle through the ventilation system, temporarily set the air intake control to the recirculated air position. Be sure to return the control to the fresh air position when the irritation has passed to keep fresh air in the vehicle. This will help keep the driver alert and comfortable.
- Air for the heating/cooling system is drawn in through the grilles just ahead of the windshield. Care should be taken that these are not blocked by leaves, snow, ice or other obstructions.
- To prevent interior fog on the windshield, set the air intake control to the fresh air position and the fan speed to the desired position, turn on the air conditioning system, and adjust the temperature control to the desired temperature.
- If the windshield fogs up, set the mode to the or position.

⚠ CAUTION

Operating the blower when the ignition switch is in the ON position could cause the battery to discharge. Operate the blower when the engine is running.

Air conditioning

Kia air conditioning systems are filled with R-134a or R-1234yf refrigerant.

1. Start the engine. Push the air conditioning button.
2. Set the mode to the position.
3. Set the air intake control to the outside air or recirculated air position.
4. Adjust the fan speed control and temperature control to maintain maximum comfort.

Your vehicle is filled with R-134a or R-1234yf according to the regulation in your country at the time of production. You can find out which air conditioning refrigerant is applied to your vehicle at the label inside of the engine room. Refer to "Refrigerant label" on page 9-20 for a more detailed location of the air conditioning refrigerant label.

⚠ CAUTION

- **The refrigerant system should only be serviced by trained and certified technicians to insure proper and safe operation.**
- **The refrigerant system should be serviced in a well-ventilated place.**
- **The air conditioning evaporator (cooling coil) shall never be repaired or replaced with one removed from a used or salvaged vehicle and new replacement MAC evaporators shall be certified (and labeled) as meeting SAE Standard J2842.**

✻ NOTICE

- When using the air conditioning system, monitor the temperature gauge closely while driving up hills or in heavy traffic when outside temperatures are high. Air conditioning system operation may cause engine overheating. Continue to use the blower fan but turn the air conditioning system off if the temperature gauge indicates engine overheating.
- Opening the windows in humid weather air conditioning may create water droplets inside the vehicle. Since excessive water droplets may cause damage to electrical equipment, the air conditioning should only be used with the windows closed.

Air conditioning system operation tips

- If the vehicle has been parked in direct sunlight during hot weather, open the windows for a short time to let the hot air inside the vehicle escape.
- Use the air conditioning to reduce humidity and moisture inside the vehicle on rainy or humid days.
- During air conditioning system operation, you may occasionally notice a slight change in the engine speed as the air conditioning compressor cycles. This is a normal system operation characteristic.
- Use the air conditioning system every month only for a few minutes to ensure maximum system performance.
- When using the air conditioning system, you may notice clear water dripping (or even puddling) on the ground under the passenger side of the vehicle. This is a normal system operation characteristic.
- Operating the air conditioning system in the recirculated air position provides maximum cooling, however, continual operation in this mode may cause the air inside the vehicle to become stale.
- During cooling operation, you may occasionally notice a misty air flow because of rapid cooling and humid air intake. This is a normal system operation characteristic.

Climate control air filter

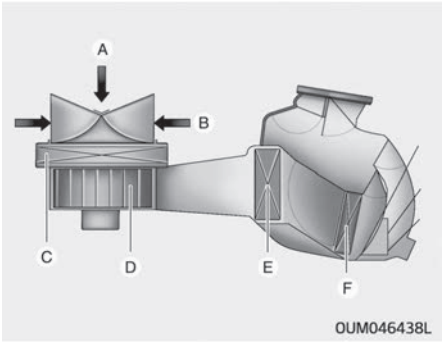

A: Outside air
B: Recirculated air
C: Climate control air filter
D: Blower
E: Evaporator core
F: Heater core

The climate control air filter installed behind the glove box filters the dust or other pollutants that come into the vehicle from the outside through the heating and air conditioning system.

If dust or other pollutants accumulate in the filter over a period of time, the air flow from the air vents may decrease, resulting in moisture accumulation on the inside of the windshield even when the outside (fresh) air position is selected. If this happens, have the climate control air filter replaced by a professional workshop. Kia recommends to visit an authorized Kia dealer/service partner.

✻ NOTICE

- Replace the filter according to the Maintenance Schedule. If the car is being driven in severe conditions such as dusty, rough roads, more frequent climate control air filter inspections and changes are required.
- When the air flow rate suddenly decreases, have the system checked by a professional workshop. Kia recommends to visit an authorized Kia dealer/service partner.

Air conditioning refrigerant label

■ Example

Type A



Type B

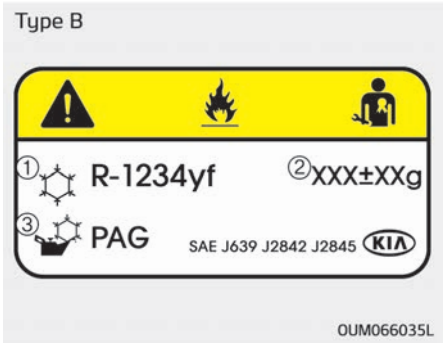

✻ The actual air conditioning refrigerant label in the vehicle may differ from the illustration.

Each symbol and specification on air conditioning refrigerant label means as below:

1. Classification of refrigerant
2. Amount of refrigerant
3. Classification of compressor lubricant

You can find out which to air conditioning refrigerant is applied to your vehicle at the label inside of the engine room.
Refer to "Refrigerant label" on page 9-20 for a more detailed location of the air conditioning refrigerant label.

Checking the amount of air conditioner refrigerant and compressor lubricant

When the amount of refrigerant is low, the performance of the air conditioning is reduced. Overfilling also has a bad influence on the air conditioning system.
Therefore, if abnormal operation is found, have the system inspected by a professional workshop.
Kia recommends to visit an authorized Kia dealer/service partner.

⚠ WARNING

■ Vehicles equipped with R-134a



Because the refrigerant is at very high pressure, the air conditioning system should only be serviced by trained and certified technicians. It is important that the correct type and amount of oil and refrigerant is used. Otherwise, it may cause damage to the vehicle and personal injury.

⚠ WARNING

■ Vehicles equipped with R-1234yf*





Because the refrigerant is mildly inflammable and at very high pressure, the air conditioning system should only be serviced by trained and certified technicians. It is important that the correct type and amount of oil and refrigerant is used. Otherwise, it may cause damage to the vehicle and personal injury.

*Your vehicle is filled with R-134a or R-1234yf according to the regulation in your country at the time of producing. You can find out which air conditioning refrigerant is applied your vehicle at the label inside of engine room. Refer to "Air conditioning system" on page 9-06 for more detail location of air conditioning refrigerant label.

Manual climate control system (if equipped)



System overview

1. Fan speed control knob
2. Front windshield defroster button
3. Rear window defroster button
4. Air conditioning button
5. Air intake control button
6. Mode selection button
7. Temperature control knob

Mode selection

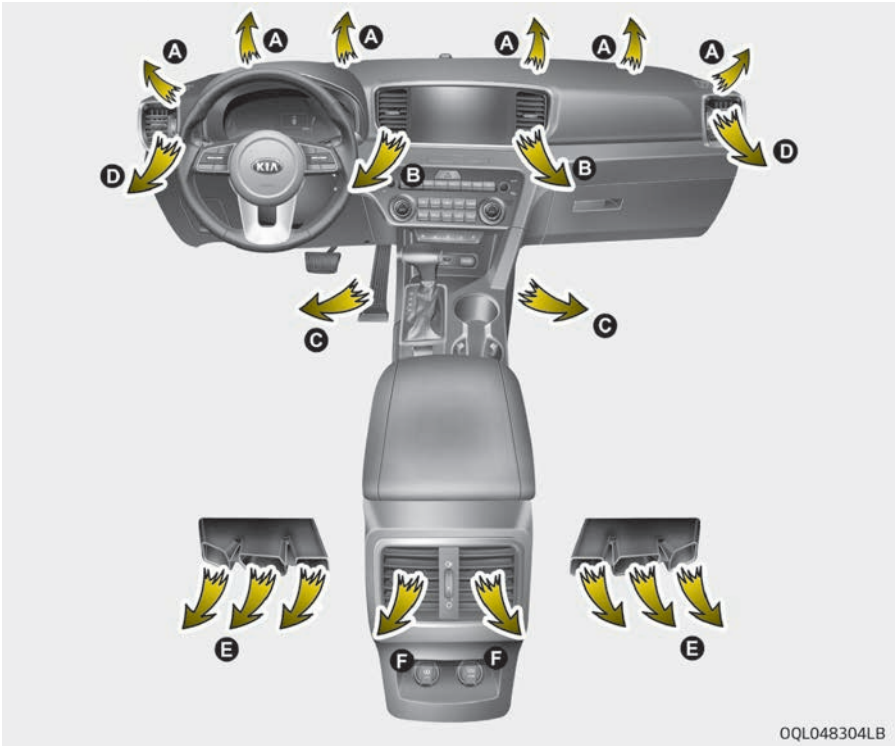

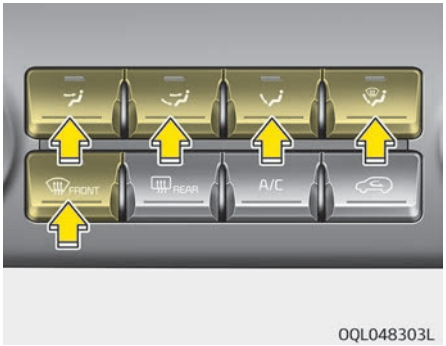

The mode selection knob controls the direction of the air flow through the ventilation system.
Air can be directed to the floor, dashboard outlets, or windshield. Five symbols are used to represent Face, Bi-Level, Floor, Floor-Defrost and Defrost air position.

Face-Level (B, D, F)

Air flow is directed toward the upper body and face. Additionally, each outlet can be controlled to direct the air discharged from the outlet.

Bi-Level (B, C, D, E, F)

Air flow is directed towards the face and the floor.

Floor-Level (A, C, D, E, F)

Most of the air flow is directed to the floor, with a small amount of the air being directed to the windshield and side window defrosters.

Floor/Defrost-Level (A, C, D, E, F)

Most of the air flow is directed to the floor and the windshield with a small amount directed to the side window defrosters.

Defrost-Level (A, D)

Most of the air flow is directed to the windshield with a small amount of the air directed to the side window defrosters.

✻ NOTICE

■ 2nd row outlet vents (E, F)

- The air flow of the 2nd row outlet vents is controlled by the front climate control system and delivered through the inside air duct of the floor (E, F).
- The air flow of the 2nd row outlet vents (E, F) may be weaker than the instrument panel vents for the long air duct.

Instrument panel vents



The outlet vents can be opened or closed separately using the thumbwheel.
Also, you can adjust the direction of air delivery from these vents using the vent control lever as shown.

Max A/C selection



The MAX A/C mode is used to cool the inside of the vehicle faster.
The air flow is directed toward the upper body and face.
In this mode, the air conditioning and the recirculated air position will be selected automatically.

Temperature control



The temperature control knob allows you to control the temperature of the air flowing from the ventilation system. To change the air temperature in the passenger compartment, turn the knob to the right position for warm and hot air or left position for cool air.

Air intake control



The air intake control is used to select the outside (fresh) air position or recirculated air position.
To change the air intake control position, press the control button.

Recirculated air position



With the recirculated air position selected, the air from the passenger compartment will be drawn through the heating system and heated or cooled according to the function selected.

Outside (fresh) air position

Type A



With the outside (fresh) air position selected, air enters the vehicle from outside and is heated or cooled according to the function selected.

Type B



✻ NOTICE

Prolonged operation of the heater in the recirculated air position (without the air conditioning selected) may cause fogging of the windshield and side windows and the air within the passenger compartment may become stale.
In addition, prolonged use of the air conditioning with the recirculated air position selected will result in excessively dry air in the passenger compartment.

(Continued)

Sunroof inside air recirculation (if equipped)

If the sunroof opens while the heater or Air Conditioning system operates, the outside (fresh) air will be selected automatically for ventilating the car. Then, if you select the recirculated air position, the outside (fresh) air will be selected automatically after 3 minutes.
If you close the sunroof, the intake mode will be changed to the previous selected mode.

⚠ WARNING

- **Continue using the climate control system in the recirculated air position may allow humidity to increase inside the vehicle which may fog the glass and obscure visibility.**

(Continued)

(Continued)

- **Do not sleep in a vehicle with the air conditioning or heating system on. It may cause serious harm or death due to a drop in the oxygen level and/or body temperature.**
- **Continue using the climate control system in the recirculated air position can cause drowsiness or sleepiness, and loss of vehicle control. Set the air intake control to the outside (fresh) air position as much as possible while driving.**

Fan speed control



The ignition switch must be in the ON position for fan operation.
The fan speed control knob allows you to control the fan speed of the air flowing from the ventilation system.
To change the fan speed, turn the knob to the right for higher speed or left for lower speed.
Setting the fan speed control knob to the "0" position turns off the fan.

Air conditioning

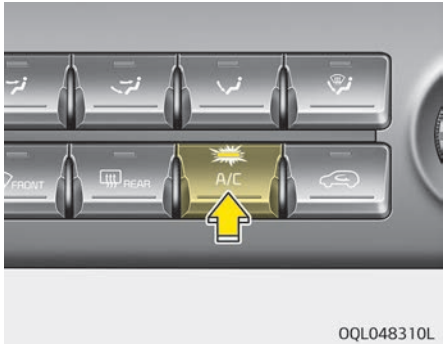

Press the A/C button to turn the air conditioning system on (the indicator light will illuminate). Press the button again to turn the air conditioning system off.

Automatic climate control system (if equipped)

■ Type A



■ Type B

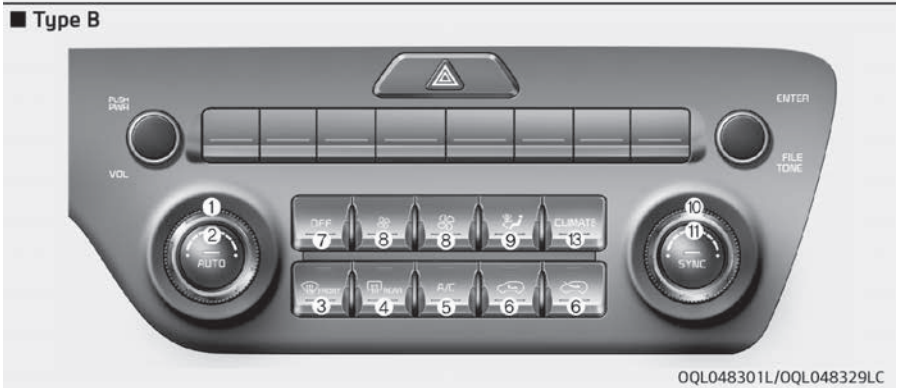

OQL048301L/OQL048329LC

System overview

1. Driver's temperature control knob
2. AUTO (automatic control) button
3. Front windshield defroster button
4. Rear window defroster button
5. Air conditioning button
6. Air intake control button
7. OFF button
8. Fan speed control button
9. Mode selection button
10. Passenger's temperature control knob
11. SYNC temperature control selection button
12. Climate control display
13. Climate information screen selection button

Automatic heating and air conditioning



1. Press the AUTO button. The modes, fan speeds, air intake and air-conditioning will be controlled automatically according to the temperature setting.

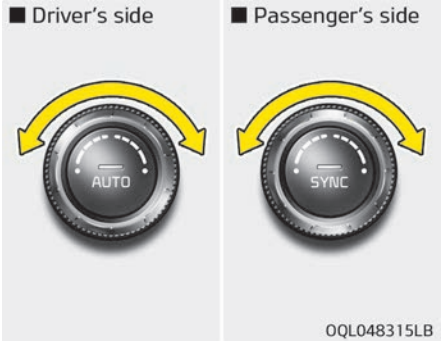

2. Turn the temperature control knob to the desired temperature.

✻ NOTICE

- To turn the automatic operation off, select any button or switch of the following:
  - Mode selection button
  - Air conditioning button

(Continued)

(Continued)

  - Front windshield defroster button (Press the button one more time to deselect the front windshield defroster function. The 'AUTO' sign will illuminate on the information display once again.)
  - Fan speed control button

  The selected function will be controlled manually while the other functions operate automatically.
- For your convenience and to improve the effectiveness of the climate control, use the AUTO button and set the temperature to 23°C/73°F (22°C/71°F – For Europe).

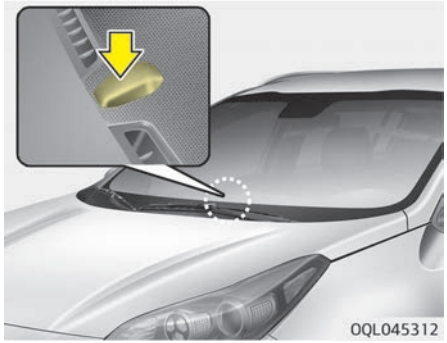

✻ NOTICE

Never place anything over the sensor located on the instrument panel to ensure better control of the heating and cooling system.

Mode selection

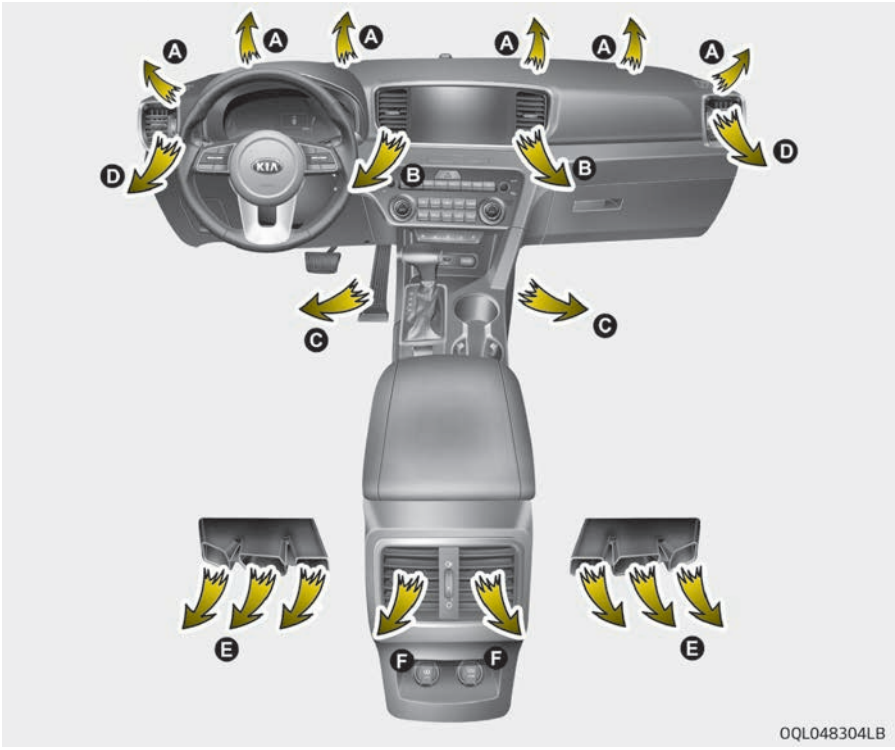



The mode selection button controls the direction of the air flow through the ventilation system.
The air flow outlet port is converted as follows:



Face-Level (B, D, F)

Air flow is directed toward the upper body and face. Additionally, each outlet can be controlled to direct the air discharged from the outlet.

Bi-Level (B, C, D, E, F)

Air flow is directed towards the face and the floor.

Floor-Level (A, C, D, E, F)

Most of the air flow is directed to the floor, with a small amount of the air being directed to the windshield and side window defrosters.

Floor/Defrost-Level (A, C, D, E, F)

Most of the air flow is directed to the floor and the windshield with a small amount directed to the side window defrosters.

Defrost-Level (A, D)



Most of the air flow is directed to the windshield with a small amount of the air directed to the side window defrosters.

Instrument panel vents



The outlet vents can be opened or closed separately using the thumbwheel.
Also, you can adjust the direction of air delivery from these vents using the vent control lever as shown.

✻ NOTICE

■ 2nd row outlet vents (E, F)
(Continued)

(Continued)

- The air flow of the 2nd row outlet vents is controlled by the front climate control system and delivered through the inside air duct of the floor (E, F).
- The air flow of the 2nd row outlet vents (E, F) may be weaker than the instrument panel vents for the long air duct.

Temperature control

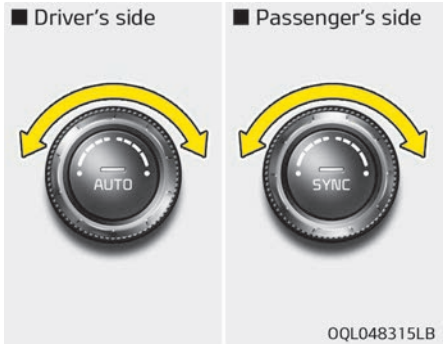

The temperature will increase to the maximum by turning the knob to the extreme right.
The temperature will decrease to the minimum by turning the knob to the extreme left.
When turning the knob, the temperature will increase or decrease by 0.5 °C/1 °F. When set to the lowest temperature setting, the air conditioning will operate continuously.

Adjusting the driver and passenger side temperature equally



- Press the "SYNC" button to adjust the driver and passenger side temperature equally.
  The passenger side temperature will be set to the same temperature as the driver side temperature.
- Turn the driver side temperature control knob. The driver and passenger side temperature will be adjusted equally.

Adjusting the driver and passenger side temperature individually

- Press the "SYNC" button again to adjust the driver and passenger side temperature individually. The illumination of the button turns off.
- Operate the driver side temperature control knob to adjust the driver side temperature.
- Operate the passenger side temperature control knob to adjust the passenger side temperature.

Temperature conversion (°C ↔ °F) (if equipped)

You can switch the temperature mode between centigrade and Fahrenheit as follows:
While pressing the OFF button, depress the AUTO button for 3 seconds or more. The display will change from centigrade to Fahrenheit, or from Fahrenheit to centigrade.

Air intake control



This is used to select the outside (fresh) air position or recirculated air position.
To change the air intake control position, push the control button.

Recirculated air position



With the recirculated air position selected, the air from the passenger compartment will be drawn through the heating system and heated or cooled according to the function selected.

Outside (fresh) air position

Type A



With the outside (fresh) air position selected, air enters the vehicle from outside and is heated or cooled according to the function selected.

Type B



✻ NOTICE

Prolonged operation of the heater in the recirculated air position (without the air conditioning selected) may cause fogging of the windshield and side windows and the air within the passenger compartment may become stale.
In addition, prolonged use of the air conditioning with the recirculated air position selected will result in exces-

(Continued)

(Continued)

sively dry air in the passenger compartment.

Sunroof inside air recirculation (if equipped)

If the sunroof opens while the heater or Air Conditioning system operates, the outside (fresh) air will be selected automatically for ventilating the car. Then, if you select the recirculated air position, the outside (fresh) air will be selected automatically after 3 minutes. If you close the sunroof, the intake mode will be changed to the previous selected mode.

⚠ WARNING

- **Continue using the climate control system in the recirculated air position may allow humidity to increase inside the vehicle which may fog the glass and obscure visibility.**
- **Do not sleep in a vehicle with the air conditioning or heating system on. It may cause serious harm or death due to a drop in the oxygen level and/or body temperature.**
- **Continue using the climate control system in the recirculated air position can cause drowsiness or sleepiness, and loss of vehicle control. Set the air intake control to the outside (fresh) air position as much as possible while driving.**

Fan speed control

■ Type A

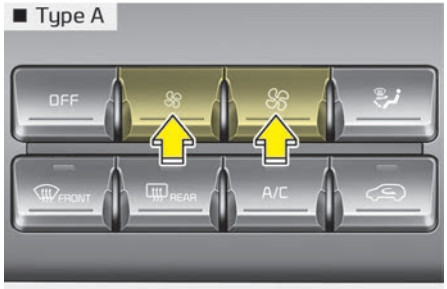

OQL045318

■ Type B

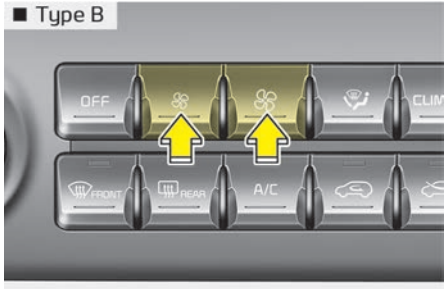

OQL045318L

The fan speed can be set to the desired speed by pushing the fan speed control button.

The higher the fan speed is, the more air is delivered.
Pressing the OFF button turns off the fan.

Air conditioning

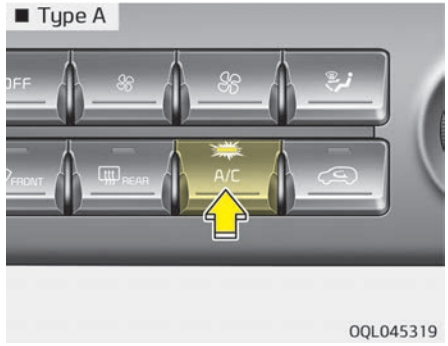

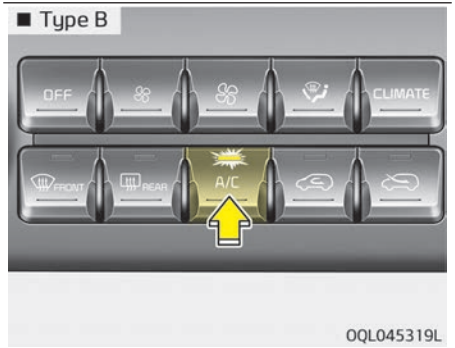

Press the A/C button to turn the air conditioning system on (the indicator light will illuminate).

Press the button again to turn the air conditioning system off.

OFF mode

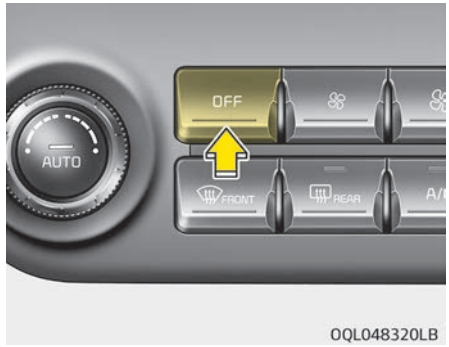

Press the front blower OFF button to turn off the front air climate control system. However, you can still operate the mode and air intake buttons as long as the ignition switch is in the ON position.

Climate information screen selection (if equipped)



Press the climate information screen selection button to display climate information on the screen.

WINDSHIELD DEFROSTING AND DEFOGGING

Manual climate control system

To defog inside windshield

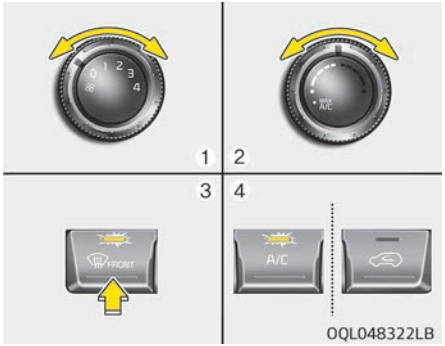

1. Set the fan speed to the desired position.
2. Select the desired temperature.
3. Select the or position.
4. The outside (fresh) air will be selected automatically. The air conditioning will also be selected automatically.

If the air conditioning and/or outside (fresh) air position are not selected automatically, press the corresponding button manually.

To defrost outside windshield

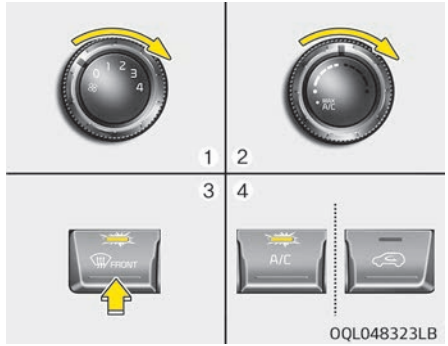

1. Set the fan speed to the highest position.
2. Set the temperature to the extreme hot position.
3. Select the position.
4. The outside (fresh) air and air conditioning will be selected automatically.

Automatic climate control system

To defog inside windshield

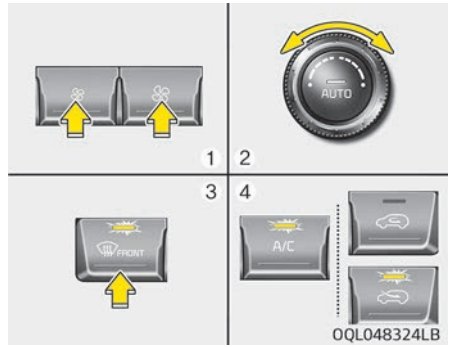

1. Set the fan speed to the desired position.
2. Select the desired temperature.
3. Press the defroster button ().
4. The air conditioning will turn on according to the detected ambient temperature and the outside (fresh) air position will be selected automatically.

If the air conditioning and outside (fresh) air position are not selected automatically, adjust the corresponding button manually. If the position is selected, lower fan speed is adjusted to a higher fan speed.

To defrost outside windshield

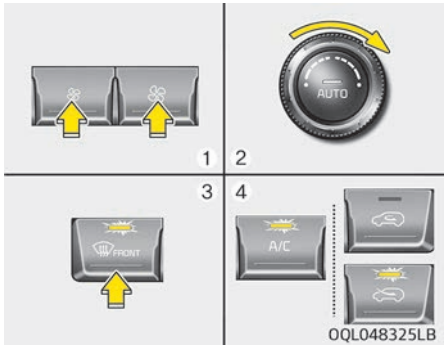

1. Set the fan speed to the highest position.
2. Set the temperature to the extreme hot position.
3. Press the defroster button ().
4. The air conditioning will turn on according to the detected ambient temperature and the outside (fresh) air position will be selected automatically.

Operation tips

- For maximum defrosting, set the temperature control to the extreme right/hot position and the fan speed control to the highest speed.
- If warm air to the floor is desired while defrosting or defogging, set the mode to the floor-defrost position.
- Before driving, clear all snow and ice from the windshield, rear window, outside rear view mirrors and all side windows.
- Clear all snow and ice from the hood and air inlet in the cowl grill to improve heater and defroster efficiency and to reduce the probability of fogging up the inside of the windshield.

⚠ WARNING

■ Windshield heating

(Continued)

(Continued)

Do not use the or position during cooling operation in extremely humid weather. The difference between the temperature of the outside air and the windshield could cause the outer surface of the windshield to fog up, causing loss of visibility. In this case, set the mode selection to the position and fan speed control to the lower speed.

Defogging logic (if equipped)

To reduce the possibility of fogging up the inside of the windshield, the air intake or air conditioning are controlled automatically according to certain conditions such as the or position. To cancel or return to the defogging logic, do the following.

Manual climate control system

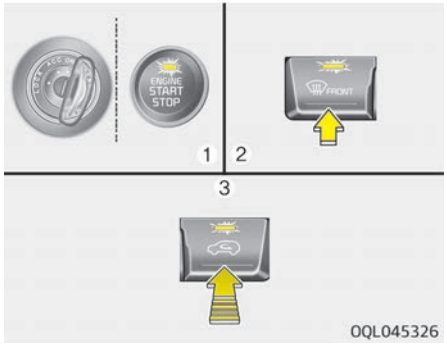

1. Turn the ignition switch to the ON position.
2. Press the defroster button (🌫).
3. Within 10 seconds after pressing the defroster button, press the air intake control button at least 5 times within 3 seconds.

The indicator light in the air intake control button will blink 3 times. It indicates that the defogging logic is canceled or returned to the programmed status.

If the battery has been discharged or disconnected, it resets to the defog logic status.

Automatic climate control system

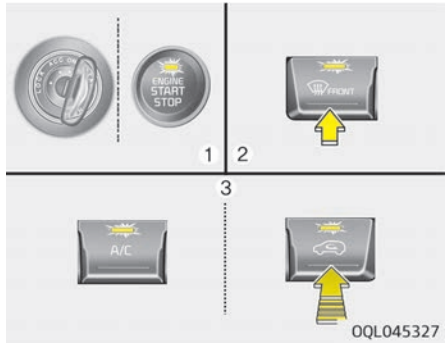

1. Turn the ignition switch to the ON position.
2. Press the defrost button (🌫).
3. While pressing the air conditioning button (A/C), press the air intake control button at least 5 times within 3 seconds.

The indicator light in the air intake control button will blink 3 times. It indicates that the defogging logic is canceled or returned to the programmed status.
If the battery has been discharged or disconnected, it resets to the defog logic status.

Auto defogging system (only for automatic climate control system, if equipped)



Auto defogging reduces the possibility of fogging up the inside of the windshield by automatically sensing the moisture inside of the windshield.



This indicator illuminates when the auto defogging system senses the moisture inside of the windshield and operates.

If more moisture is in the vehicle, higher steps operate as follow.

(For European region)
- Step 1: Blowing air flow toward the windshield
- Step 2: Increasing air flow toward the windshield
- Step 3: Operating the air conditioning.
- Step 4: Outside air position

(Except European region)
- Step 1: Outside air position
- Step 2: Operating the air conditioning.
- Step 3: Blowing air flow toward the windshield
- Step 4: Increasing air flow toward the windshield

To cancel or reset the Auto Defogging System

Press the front windshield defroster button for 3 seconds when the ignition switch is in the ON position.

When the ADS system is canceled, the indicator on the button will blink 3 times per 0.5 sec and the position "ADS OFF" will be displayed on the climate control information screen.
When the ADS system is reset, the indicator on the button will blink 6 times per 0.25 sec and the position "ADS OFF" will be disappeared on the climate control information screen.

CLEAN AIR (IF EQUIPPED)

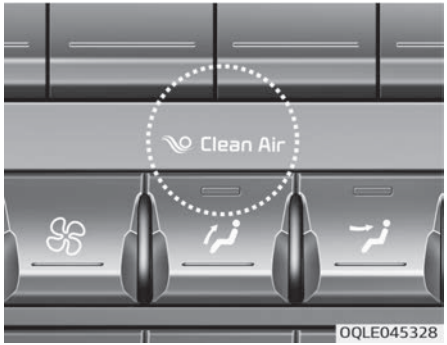

When the ignition switch is in the ON position, the clean air function turns on automatically.
Also, the clean air function turns off automatically, when the ignition switch turns to the OFF position.

STORAGE COMPARTMENT

These compartments can be used to store small items.

⚠ CAUTION

- **To avoid possible theft, do not leave valuables in the storage compartment.**
- **Always keep the storage compartment covers closed while driving. Do not attempt to place so many items in the storage compartment that the storage compartment cover cannot close securely.**

⚠ WARNING

■ Flammable materials

Do not store cigarette lighters, propane cylinders, or other flammable/explosive materials in the vehicle. These items may catch fire and/or explode if the vehicle is exposed to hot temperatures for extended periods.

Center console storage

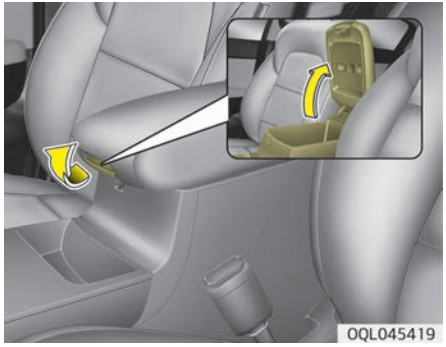

To open the center console storage, pull up the lever.

Glove box

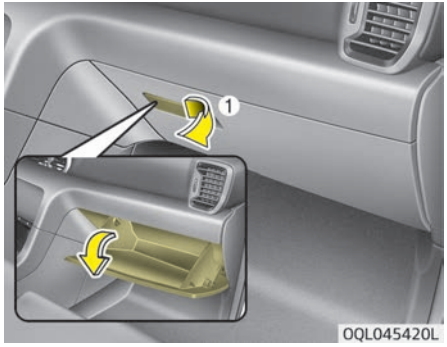

The glove box can be locked and unlocked with a master key (if equipped). To open the glove box, pull the lever (1) and the glove box will automatically open. Close the glove box after use.

⚠ WARNING

To reduce the risk of injury in an accident or sudden stop, always keep the glove box door closed while driving.

⚠ CAUTION

Do not keep food in the glove box for a long time.

Sunglass holder

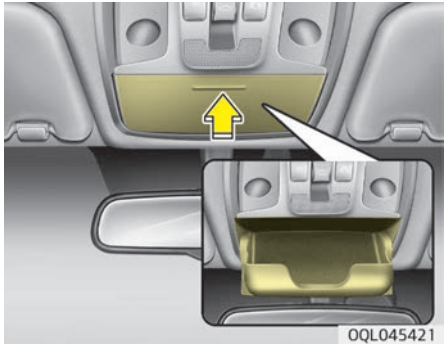

To open the sunglass holder, press the cover and the holder will slowly open. Place your sunglasses with the lenses facing out. To close the sunglass holder, push it up.

⚠ WARNING

- **Do not keep objects except sunglasses inside the sunglass holder. Such objects can be thrown from the holder in the event of a sudden stop or an accident, possibly injuring the passengers in the vehicle.**
- **Do not open the sunglass holder while the vehicle is moving. The rear view mirror of the vehicle can be blocked by an opened sunglass holder.**
- **Do not put the glasses forcibly into a sunglass holder to prevent breakage or deformation of the glasses. It may cause personal injury if you try to open it forcibly when the glasses are jammed in the holder.**

Luggage box



You can place tools, etc. in the box for easy access.
Grasp the handle (1) on the edge of the cover and lift it.

INTERIOR FEATURES

Cigarette lighter (if equipped)

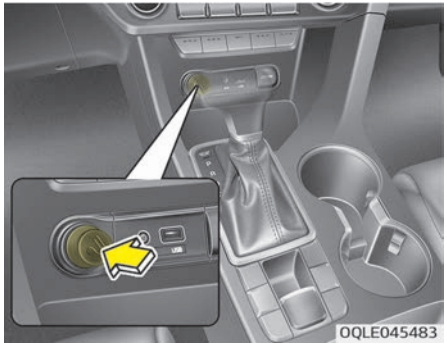

For the cigarette lighter to work, the ignition switch must be in the ACC position or the ON position.
To use the cigarette lighter, push it all the way into its socket. When the element has heated, the lighter will pop out to the "ready" position.
Kia recommends to use parts for replacement from an authorized Kia dealer/service partner.

⚠ WARNING

- **Do not hold the lighter in after it is already heated because it will overheat.**
- **If the lighter does not pop out within 30 seconds, remove it to prevent overheating.**
- **Do not insert foreign objects into the socket of the cigarette lighter. It may damage the cigarette lighter.**

⚠ CAUTION

The use of plug-in accessories (shavers, hand-held vacuums, coffee pots, etc.) may damage the socket or cause electrical failure.

Ashtray (if equipped)

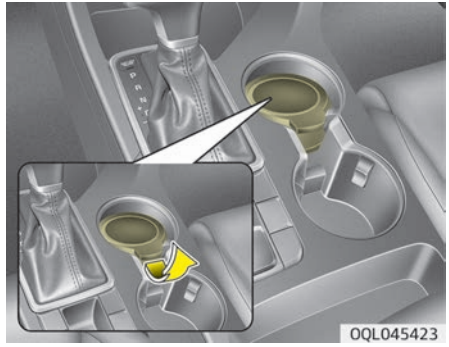

To use the ashtray, open the cover.
To clean or empty the ashtray, pull it out.

⚠ WARNING

■ Ashtray use

- **Do not use the vehicle's ashtrays as waste receptacles.**
- **Putting lit cigarettes or matches in an ashtray with other combustible materials may cause fire.**

Cup holder

⚠ WARNING

■ Hot liquids

- **Do not place uncovered cups of hot liquid in the cup holder while the vehicle is in motion. If the hot liquid spills, you may burn yourself. Such a burn to the driver could lead to loss of control of the vehicle.**
- **To reduce the risk of a personal injury in the event of a sudden stop or collision, do not place uncovered or unsecured bottles, glasses, cans, etc., in the cup holder while the vehicle is in motion.**

(Continued)

(Continued)

- **If uncovered cups and cans containing any form of liquid are put into the front/center seat cup holders and the vehicle brakes heavily, the liquid may flow into the narrow openings around the cup holders and console, and soak into the vehicle's internal electrical system.**
  To avoid subsequent system malfunction, always firmly cover any container holding liquid.

⚠ WARNING

Keep cans or bottles out of direct sun light and do not put them in a vehicle that is heated up. It may explode.

✻ NOTICE

- Keep your drinks sealed while driving to prevent spilling of your drink. If liquid spills, it may get into the vehicle's electrical/electronic system and damage electrical/electronic parts.
- When cleaning spilled liquids, do not dry the cup holder at high temperature. This may damage the cup holder.

■ Type A

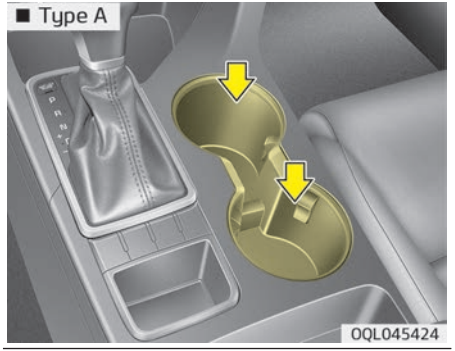

■ Type B

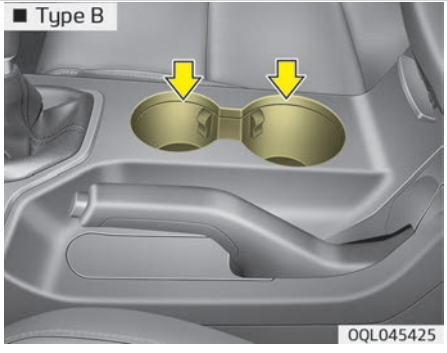

■ Type C

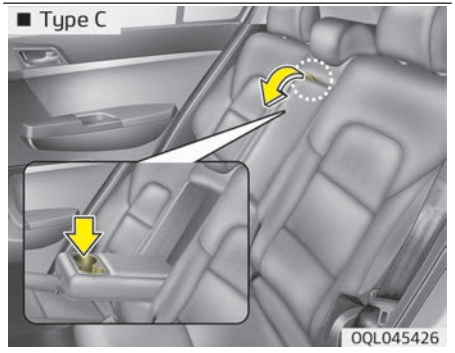

Cups or small beverage cans may be placed in the cup holders.

Sunvisor

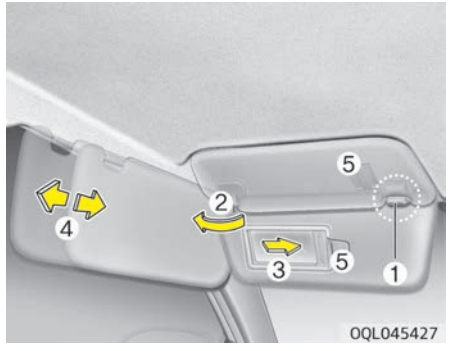

Use the sunvisor to shield direct light through the front or side windows.
To use the sunvisor, pull it downward.
To use the sunvisor for the side window, pull it downward, unsnap it from the bracket (1) and swing it to the side (2).
To use the vanity mirror, pull down the visor and slide the mirror cover (3).
Adjust the sunvisor extension forward or backward (4).
The ticket holder (5) is provided for holding a tollgate ticket (if equipped).

⚠ CAUTION

■ Vanity mirror lamp (if equipped)

If you use the vanity mirror lamp, turn off the lamp before returning the sunvisor to its original position, otherwise it could result in battery discharge and possible sunvisor damage.

Seat warmer (if equipped)

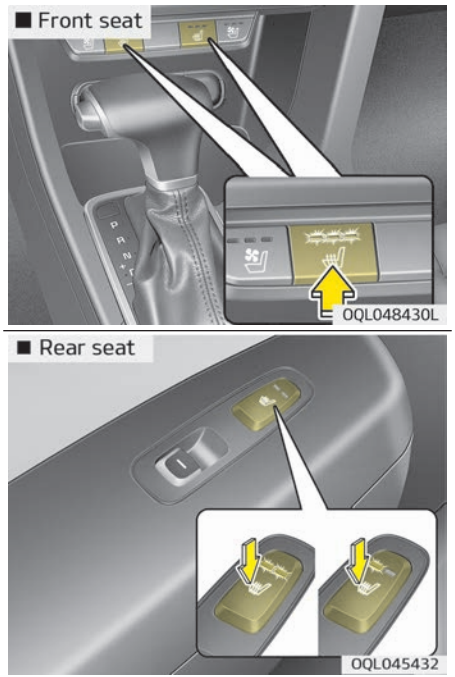

The seat warmer is provided to warm the front seats during cold weather.

With the ignition switch in the ON position, push either of the switches to warm the driver's seat or the front passenger's seat.
During mild weather or under conditions where the operation of the seat warmer is not needed, keep the switches in the "OFF" position.

- Each time you press the switch, the temperature setting of the seat will change as follows:
  - Front seat

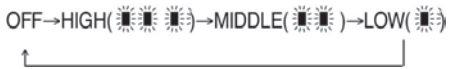

  - Rear seat

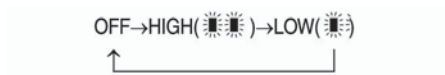

- The seat warmer defaults to the OFF position whenever the ignition switch is turned on.

– Temperature control(Automatic)

The seat warmer starts to automatically control the seat temperature in order to prevent low-temperature burns after being manually turned ON.



You may manually press the button to increase the seat temperature. However, it soon returns to the automatic mode again.

- When pressing the switch for more than 1.5 seconds with the seat warmer operating, the seat warmer will turn OFF.
- The seat warmer defaults to the OFF position whenever the Engine Start/Stop button is in the ON position.

✻ NOTICE

With the seat warmer switch in the ON position, the heating system in the seat turns off or on automatically depending on the seat temperature.

⚠ CAUTION

- **When cleaning the seats, do not use an organic solvent such as paint thinner, benzene, alcohol and gasoline. Doing so may damage the surface of the heater or seats.**
- **To prevent overheating the seat warmer, do not place anything on the seats that insulates against heat, such as blankets, cushions or seat covers while the seat warmer is in operation.**
- **Do not place heavy or sharp objects on seats equipped with seat warmers. Damage to the seat warming components could occur.**
- **Do not change the seat cover. It may damage the seat warmer or air ventilation system.**

⚠ WARNING

■ Seat warmer burns

Passengers should use extreme caution when using seat warmers due to the possibility of excess heating

(Continued)

(Continued)

or burns. The seat warmer may cause burns even at low temperatures, especially if used for long periods of time. In particular, the driver must exercise extreme care for the following types of passengers:

1. **Infants, children, elderly or handicapped persons, or hospital outpatients**
2. **Persons with sensitive skin or those that burn easily**
3. **Fatigued individuals**
4. **Intoxicated individuals**
5. **Individuals taking medication that can cause drowsiness or sleepiness (sleeping pills, cold tablets, etc.)**

Air ventilation seat (if equipped)

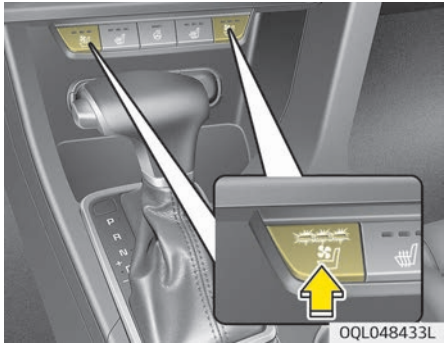

The temperature setting of the seat changes according to the switch position.

- If you want to warm your seat cushion, press the switch (red color).
- If you want to ventilate your seat cushion, press the switch (blue color).
- Each time you press the button, the airflow will change as follows:

OFF→HIGH( )→MIDDLE( )→LOW( )

- The seat warmer (with air ventilation) defaults to the OFF position whenever the ignition switch is turned on.

⚠ CAUTION

When cleaning the seats, do not use an organic solvent such as paint thinner, benzene, alcohol and gasoline. Doing so may damage the surface of the heater or seats.

Power outlet

■ Type A

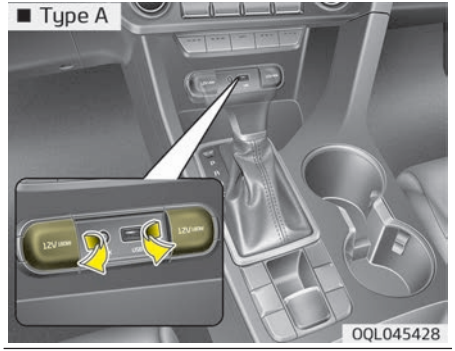

■ Type B

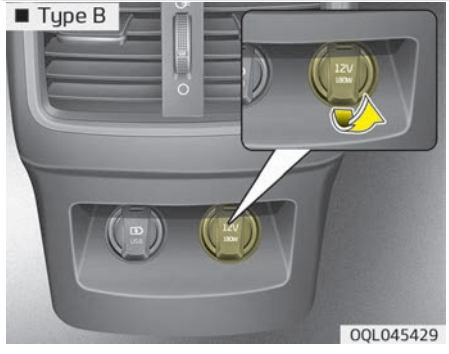

The power outlet is designed to provide power for mobile telephones or other devices designed to operate with vehicle electrical systems. The devices should draw less than 10 amps with the engine running.

⚠ CAUTION

- **Use the power outlet only when the engine is running and remove the accessory plug after use. Using the accessory plug for prolonged periods of time with the engine off could cause the battery to discharge.**
- **Only use 12V electric accessories which are less than 10A in electric capacity.**
- **Adjust the air-conditioner or heater to the lowest operating level when using the power outlet.**
- **Close the cover when not in use.**

(Continued)

(Continued)

- **Some electronic devices can cause electronic interference when plugged into a vehicle's power outlet. These devices may cause excessive audio static and malfunctions in other electronic systems or devices used in your vehicle.**
- **Refrain from using the heater or A/C if you need to use the multipurpose socket. If the heater or A/C has to be used simultaneously, have it to the lowest setting.**
- **Some add-on electrical equipment will induce electromagnetic interference. This will lead to subsequent malfunction or hinder good reception of the Audio/Video and electrical system.**
- **Always make sure that electric add-ons are fully plugged into the multipurpose sockets. Insecure contacts may lead to electrical malfunctions.**

(Continued)

(Continued)

- **Do not use any electrical device that requires more than the designated power consumption. The power outlet and electrical wiring may heat up resulting in electrical malfunctions.**
- **Use plug in battery equipped electrical devices with reverse current protection.The current from the battery may flow into the vehicle's electronic system and cause system malfunction.**

⚠ WARNING

Do not put a finger or a foreign element (pin, etc.) into a power outlet and do not touch with a wet hand. You may get an electric shock.

USB charger (if equipped)



The USB charger is designed to recharge batteries of small size electrical devices using a USB cable. The electrical devices can be recharged when the Engine Start/Stop button is in the ACC / ON / START position.
The battery charging state may be monitored on the electrical device.
Disconnect the USB cable from the USB port after use.

- Some devices are not supported for fast charging but will be charged with normal speed.
- Use the USB charger when the engine is running to prevent battery discharge.
- Only devices that fit the USB port can be used.
- The USB charger can be used only for battery charging purposes.
- Battery chargers cannot be charged.

Wireless smart phone charging system (if equipped)



A wireless smart phone charging system is located in front of the center console.
Firmly close all doors, and turn the ignition to ACC or IGN ON. To start wireless charging, place the smart phone equipped with a wireless charging function on the wireless charging pad.

For best wireless charging results, place the smart phone on the center of the charging pad.
The wireless charging system is designed for one smart phone equipped with QI per single usage only. Please refer to the smart phone accessory cover or the smart phone manufacturer homepage to check whether your smart phone supports the QI function.

⚠ WARNING

If any metallic object such as coins is located between the wireless charging system and the smart phone, the charging may be disrupted. Also, the metallic object may heat up.

Wireless smart phone charging

1. Remove any object on the smart phone charging pad including the smart key. If there is any foreign object on the pad other than a smart phone, the wireless charging function may not operate properly.
2. Place the smart phone on the center of the wireless charging pad.

3. The indicator light will change to orange once the wireless charging begins. After the charging is complete, the orange light will change to green.
4. You can choose to turn the wireless charging function to either ON or OFF by selecting the USM on the instrument cluster. (Please refer to "Instrument cluster" on page 4-53 for details.)

If the wireless charging does not work, gently move your smart phone around the pad until the charging indicator light turns orange. Depending on the smart phone, the charging indicator light may not turn green even after the charging is complete.
If the wireless charging is not functioning properly, the orange light will blink and flash for ten seconds then turn off. In such cases, remove the smart phone from the pad and replace it on the pad again, or double check the charging status.

If you leave the smart phone on the charging pad when the vehicle ignition is in OFF, the vehicle will alert you through warning messages and sound (applicable for vehicles with voice guidance (function) after the 'Good bye' function on the instrument cluster ends.

⚠ CAUTION

- **Securely close the tray cover when using the wireless smart phone charge function. Otherwise, some liquid held by the cup holder may flow onto the wireless charging pad during sudden stops.**
- **Close the tray cover when the smart phone is placed in it at all times. If the vehicle is in motion without the tray cover closed, it is more likely that the driver may use the smart phone. The use of smart phones while driving may lead to possible injuries and accidents.**

(Continued)

(Continued)

- **If it is not possible to close the tray cover due to the size of the smart phone, do not use the wireless smart phone charging function at all.**
- **When the tray cover is broken, do not use the wireless charging function before the tray cover is repaired.**
- **When the interior temperature of the wireless charging system rises above a set temperature, the wireless charging will cease to function. After the interior temperature drops below the threshold, the wireless charging function will resume.**
- **If there is any metallic object between the smart phone and the wireless charging pad, immediately remove the smart phone. Remove the metallic object after it has completely cooled down.**
- **The wireless charging may not function properly when there is a heavy accessory cover on the smart phone.**

(Continued)

(Continued)

- **The wireless charging will stop when using the wireless smart key search function to prevent radio wave disruption.**
- **The wireless charging will stop when the smart key is moved out of the vehicle with the ignition in ON.**
- **The wireless charging will stop when any of the doors is opened (applicable for vehicles equipped with smart keys).**
- **The wireless charging will stop when the vehicle is turned OFF.**
- **The wireless charging will stop when the smart phone is not in complete contact with the wireless charging pad.**
- **Items equipped with magnetic components such as credit card, telephone card, bankbook, any transportation ticket and such may become damaged during wireless charging.**

(Continued)

(Continued)

- **Place the smart phone on the center of the charge pad for best results. The smart phone may not charge when placed near the rim of the charging pad. When the smart phone does get charged, it may heat up excessively.**
- **For smart phones without builtin wireless charging system, an appropriate accessory has to be equipped.**
- **Smart phones of some manufacturers may display messages on weak current. This is due to the particular characteristic of the smart phone and does not imply a malfunction on wireless charging function.**
- **The indicator light of some manufacturers' smart phones may still be yellow after the smart phone is fully charged. This is due to the particular characteristic of the smart phone and not a malfunction of the wireless charging.**

(Continued)

(Continued)

- **When any smart phone without a wireless charging function or a metallic object is placed on the charging pad, a small noise may sound.This small sound is due to the vehicle discerning compatibility of the object placed on the charging pad. It does not affect your vehicle or the smart phone in any way.**

Clothes hanger (if equipped)

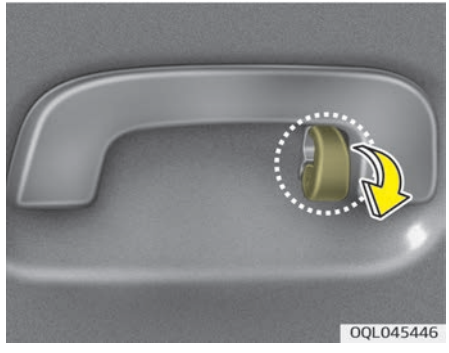

❊ The actual feature may differ from the illustration.

To use the hanger, pull down the upper portion of the hanger.

⚠ CAUTION

Do not hang heavy clothes, since those may damage the hook.

⚠ WARNING



Do not hang other objects such as hangers or hard objects except clothes. Also, do not put heavy, sharp or breakable objects in the clothe pockets. In an accident or
(Continued)

(Continued)

when the curtain air bag is inflated, it may cause vehicle damage or personal injury.

Floor mat anchor(s) (if equipped)

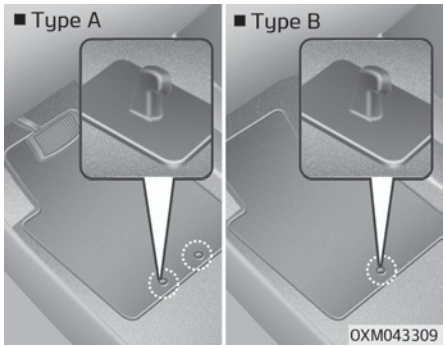

When using a floor mat on the front floor carpet, make sure it attaches to the floor mat anchor(s) in your vehicle. This keeps the floor mat from sliding forward.

⚠ WARNING

The following must be observed when installing ANY floor mat to the vehicle.

- **Ensure that the floor mats are securely attached to the vehicle's floor mat anchor(s) before driving the vehicle.**
- **Do not use ANY floor mat that cannot be firmly attached to the vehicle's floor mat anchors.**
- **Do not stack floor mats on top of one another (e.g. an all-weather rubber mat on top of a carpeted floor mat). Only a single floor mat should be installed in each position.**

IMPORTANT - Your vehicle was manufactured with driver's side floor mat anchors that are designed to securely hold the floor mat in place. To avoid any interference with pedal operation, Kia recommends that the Kia floor mats designed for use in your vehicle be installed.

Luggage net holder (if equipped)

■ Type A

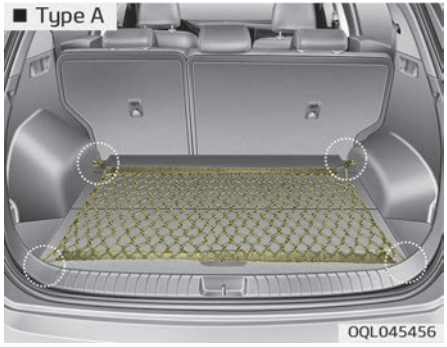

OQL045456

■ Type B

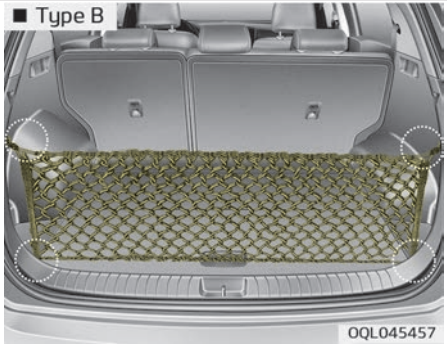

OQL045457

To keep items from shifting in the cargo area, you can use the holders located in the cargo area to attach the luggage net.
If necessary, Kia recommends to contact an authorized Kia dealer/service partner.

⚠ CAUTION

To prevent damage to the goods or the vehicle, care should be taken when carrying fragile or bulky objects in the luggage compartment.

⚠ WARNING

Avoid eye injury. DO NOT overstretch the luggage net, ALWAYS keep your face and body out of the luggage net's recoil path. DO NOT use the luggage net when the strap has visible signs of wear or damage.

Cargo security screen (if equipped)

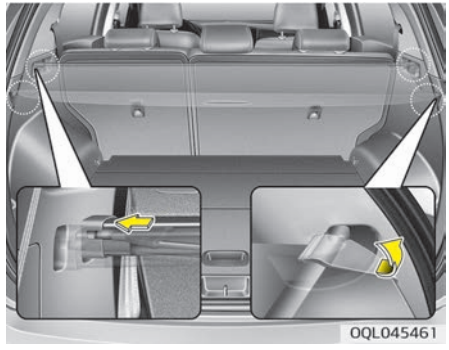

OQL045461

Use the cargo security screen to hide items stored in the cargo area.
To use the cargo security screen, pull the handle backward and insert the edges into the slots.







When not in use cargo security screen, follow the below steps.

1. Pull up the luggage cover using the handle (1).
2. Pull up a triangle-shaped cover (2).
3. Place the cargo security screen on the lower portion of the cargo area.

⚠ WARNING

- **Do not place objects on the cargo security screen. Such objects may be thrown about inside the vehicle and possibly injure vehicle occupants during an accident or when braking.**
- **Never allow anyone to ride in the luggage compartment. It is designed for luggage only.**
- **Maintain the balance of the vehicle and locate the weight as far forward as possible.**

⚠ CAUTION

Since the cargo security screen may be damaged or malformed, do not put the luggage on it when it is used.

Roof rack (if equipped)

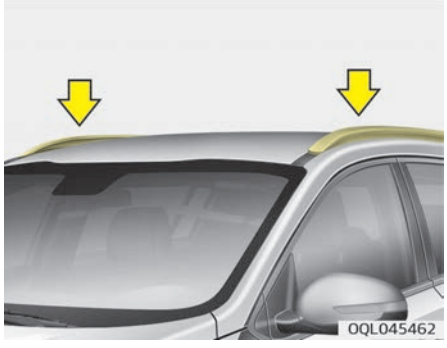

If the vehicle has a roof rack, you can load cargo on top of your vehicle.
Crossbars and fixing components needed to install the roof rack on your vehicle may be obtained from an authorized Kia dealer/service partner or other qualified shop.

✻ NOTICE

- The crossbars (if equipped) should be placed in the proper load carrying positions prior to placing items onto the roof rack.
- If the vehicle is equipped with a sunroof, be sure not to position cargo onto the roof rack in such a way that it could interfere with sunroof operation.
- When the roof rack is not being used to carry cargo, the crossbars may need to be repositioned if wind noise is detected.

⚠ CAUTION

- **When carrying cargo on the roof rack, take the necessary precautions to make sure the cargo does not damage the roof of the vehicle.**

(Continued)

(Continued)

- **When carrying large objects on the roof rack, make sure they do not exceed the overall roof length or width.**
- **When you are carrying cargo on the roof rack, do not operate the sunroof (if equipped).**

⚠ WARNING

- **The following specification is the maximum weight that can be loaded onto the roof rack. Distribute the load as evenly as possible across the crossbars (if equipped) and roof rack and secure the load firmly.**

ROOF RACK	100 kg (220 lbs.) EVENLY DISTRIBUTED

Loading cargo or luggage in excess of the specified weight limit on the roof rack may damage your vehicle.

(Continued)

(Continued)

- **The vehicle center of gravity will be higher when items are loaded onto the roof rack. Avoid sudden starts, braking, sharp turns, abrupt maneuvers or high speeds that may result in loss of vehicle control or rollover resulting in an accident.**
- **Always drive slowly and turn corners carefully when carrying items on the roof rack. Severe wind updrafts, caused by passing vehicles or natural causes, can cause sudden upward pressure on items loaded on the roof rack. This is especially true when carrying large, flat items such as wood panels or mattresses. This could cause the items to fall off the roof rack and cause damage to your vehicle or others around you.**
- **To prevent damage or loss of cargo while driving, check frequently before or while driving to make sure the items on the roof rack are securely fastened.**

Audio system

Audio system 5-02
Antenna 5-02
USB port 5-03
How vehicle audio works 5-03
Audio (Without Touch Screen) 5-06
System layout – control panel 5-07
System layout – steering wheel remote control 5-10
Turning the system on or off 5-12
Turning the display on or off 5-12
Getting to know the basic operations 5-13
Radio 5-14
Turning on the radio 5-14
Changing the radio mode 5-15
Scanning for available radio stations 5-16
Searching for radio stations 5-16
Saving radio stations 5-16
Listening to saved radio stations 5-17
Media Player 5-18
Using the media player 5-18
Using the USB mode 5-18
Bluetooth 5-22
Connecting Bluetooth devices 5-22
Using a Bluetooth audio device 5-24
Using a Bluetooth phone 5-26
System status icons 5-32
Bluetooth 5-32
Signal strength 5-32
Audio system specifications 5-33
USB 5-33
Bluetooth 5-34
Trademarks 5-35
Declaration of Conformity 5-36
RoHS for Taiwan 5-37
FCC 5-37
NCC for Taiwan 5-39

AUDIO SYSTEM

✻ NOTICE

If you install an aftermarket HID head lamp, your vehicle's audio and electronic device may malfunction.

✻ If your vehicle is equipped with AVN (Audio, Video and Navigation) system, refer to a separately supplied manual for detailed information.

Antenna

Pole type antenna

■ Type A

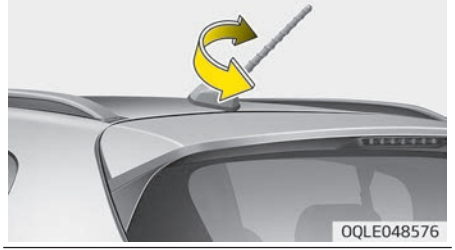

■ Type B

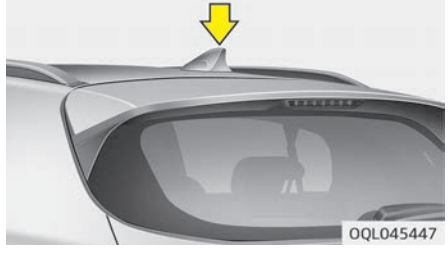

Your vehicle uses a roof antenna to receive both AM and FM broadcast signals. This antenna pole is removable. To remove the antenna pole, turn it counterclockwise. To install the antenna, turn it clockwise.

Shark fin antenna (if equipped)

The shark fin antenna will receive the transmit data.

⚠ CAUTION

■ Pole type antenna

- **Before entering a place with a low height clearance or a car wash, remove the antenna pole by rotating it counterclockwise. If not, the antenna may be damaged.**
- **When reinstalling your antenna pole, it is important that it is fully tightened and adjusted to the upright position to ensure proper reception. But it could be removed when parking the vehicle or when loading cargo on the roof rack.**

(Continued)

(Continued)

- **When cargo is loaded on the roof rack, do not place the cargo near the antenna pole to ensure proper reception.**

USB port

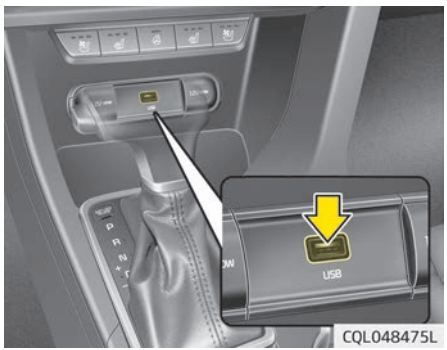

You can use the USB port to plug in a USB device.

✻ NOTICE

When using a portable audio device connected to the power outlet, noise may occur during playback. If this happens, use the power source of the portable audio device.

How vehicle audio works

FM reception

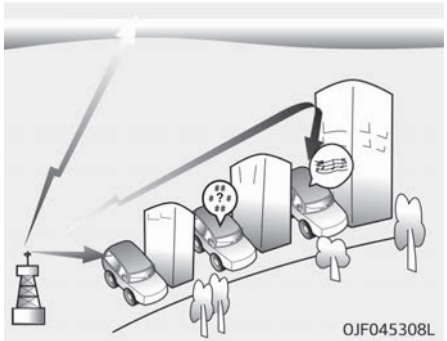

AM and FM radio signals are broadcast from transmitter towers located around your city. They are intercepted by the radio antenna on your vehicle. This signal is then received by the radio and sent to your vehicle speakers.
When a strong radio signal has reached your vehicle, the precise engineering of your audio system ensures the best possible quality reproduction. However, in some cases the signal coming to your vehicle may not be strong and clear.

This can be due to factors, such as the distance from the radio station, closeness of other strong radio stations or the presence of buildings, bridges or other large obstructions in the area.

AM (MW, LW) reception

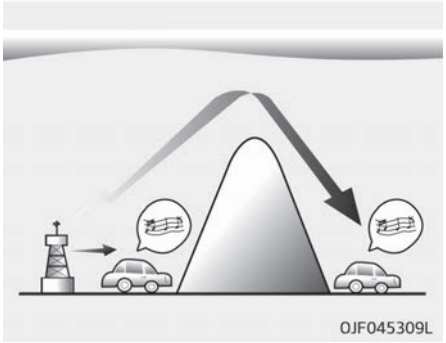

AM broadcasts can be received at greater distances than FM broadcasts. This is because AM radio waves are transmitted at low frequencies. These long, low frequency radio waves can follow the curvature of the earth rather than travelling straight out into the atmosphere. In addition, they curve around obstructions so that they can provide better signal coverage.

FM radio station

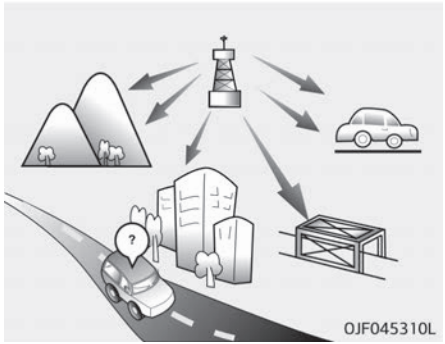

FM broadcasts are transmitted at high frequencies and do not bend to follow the earth's surface. Because of this, FM broadcasts generally begin to fade at short distances from the station. Also, FM signals are easily affected by buildings, mountains, or other obstructions. These can result in certain listening conditions that might lead you to believe a problem exists with your radio. The following conditions are normal and do not indicate radio trouble:

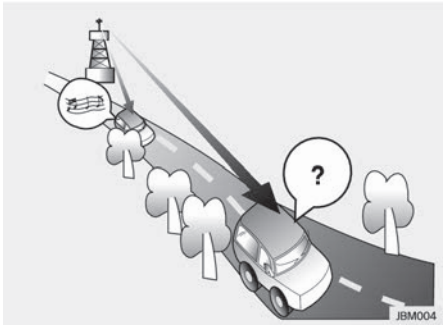

- Fading - As your vehicle moves away from the radio station, the signal will weaken and sound will begin to fade. When this occurs, we suggest that you select another station with a stronger signal.

- Flutter/Static - Weak FM signals or large obstructions between the transmitter and your radio can disturb the signal causing static or fluttering noises to occur. Reducing the treble level may lessen this effect until the disturbance clears.

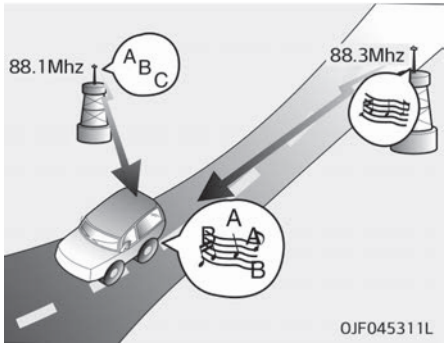

- Station Swapping - As an FM signal weakens, another more powerful signal near the same frequency may begin to play. This is because your radio is designed to lock onto the clearest signal. If this occurs, select another station with a stronger signal.

- Multi-Path Cancellation - Radio signals being received from several directions can cause distortion or fluttering. This can be caused by a direct and reflected signal from the same station, or by signals from two stations with close frequencies. If this occurs, select another station until the condition has passed.

Using a cellular phone or a two-way radio

When a cellular phone is used inside the vehicle, noise may be produced from the audio system. This does not mean that something is wrong with the audio equipment. In such a case, use the cellular phone at a place as far as possible from the audio equipment.

⚠ CAUTION

When using a communication system such as a cellular phone or a radio set inside the vehicle, a separate external antenna must be fitted. When a cellular phone or a radio set is used with an internal antenna alone, it may interfere with the vehicle's electrical system and adversely affect safe operation of the vehicle.

⚠ WARNING

Do not use a cellular phone while driving. Stop at a safe location to use a cellular phone.

AUDIO (WITHOUT TOUCH SCREEN)

■ Type A



■ Type B



(With Bluetooth® Wireless Technology)

❈ The actual features in the vehicle may differ from the illustration.

D9J4J0000EE-D9J4J0001EE

System layout – control panel

1. AUDIO
   - Press to display the radio/media mode selection window.
   - When the mode selection window displays, turn the TUNE knob to select the desired mode and then press the knob.
2. PHONE button
   - Press to start connecting a mobile phone via Bluetooth.
   - After a Bluetooth phone connection is made, press to access the Bluetooth phone menu.
3. FAV
   - While listening to the radio, press to move to next page of the preset list.
4. POWER button/ knob
   - Press to turn the system on or off.
   - Turn to the left or right to adjust the system sound volume.
5. SEEK TRACK button
   - Change the station/track/file.
   - While listening to the radio, press and hold to search for a station.
   - While playing media, press and hold to rewind or fast forward (except for the Bluetooth audio mode).

■ Type A

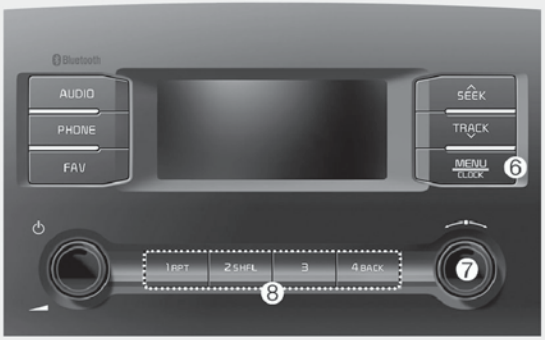

■ Type B



(With Bluetooth® Wireless Technology)

❊ The actual features in the vehicle may differ from the illustration.

D9J4J0002EE-D9J4J0003EE

System layout – control panel

6. MENU button/CLOCK button
   - Press to access the menu screen for the current mode.
   - Press and hold to access the time setup screen.
7. TUNE knob/FILE knob/ENTER button
   - While listening to the radio, turn to adjust the frequency.
   - While playing media, turn to search for a track/file (except for the Bluetooth audio mode).
   - During a search, press to select the current track/file.
8. Number buttons (1 RPT ~ 4 BACK)
   - While listening to the radio, press to listen to a saved radio station.
   - While listening to the radio, press and hold to save the current radio station to the preset.
   - In the USB/Bluetooth audio modes, press the 1 RPT button to change the repeat play mode. Press the 2 SHFL button to change the shuffle play mode.
   - Press the 4 BACK button to return to the previous screen (except for the radio preset list).

System layout – steering wheel remote control

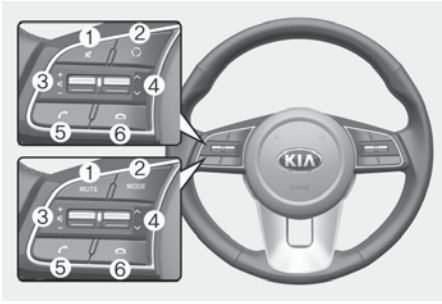

(Bluetooth® equipped model)

❊ The actual features in the vehicle may differ from the illustration.

1. MUTE button
   - Press to mute or unmute the system.
   - During a call, press to mute or unmute the microphone.
   - While playing media, press to pause or resume playback.
2. MODE button
   - Press to switch between radio and media modes.
   - Press and hold to turn the system on or off. (if equipped)
3. Volume lever
   - Push up or down to adjust the volume.
4. Up/Down lever
   - Change the station/track/file.
   - While listening to the radio, push to listen to the previous/next saved radio station.
   - While listening to the radio, push and hold to search for a station.
   - While playing media, push and hold to rewind or fast forward (except for the Bluetooth audio mode).
5. Call/Answer button
   - Press to start connecting a mobile phone via Bluetooth.
   - After a Bluetooth phone connection is made, Press and hold to dial the most recent phone number. When a call comes in, press to answer the call.
   - During a call, press to switch between the active call and the held call. Press and hold to switch the call between the system and the mobile phone.
6. Call end button

⚠ WARNING

■ About driving

- **Do not operate the system while driving. Driving while distracted may result in a loss of vehicle control, potentially leading to an accident, severe personal injury, or death. The driver's primary responsibility is the safe and legal operation of a vehicle, and any handheld devices, equipment, or vehicle systems which divert the driver's attention from this responsibility should never be used during operation of the vehicle.**
- **Avoid watching the screen while driving. Driving while distracted may lead to a traffic accident. Stop your vehicle in a safe location before using functions that require multiple operations.**

(Continued)

(Continued)

- Stop your vehicle first before using your mobile phone. Using a mobile phone while driving may lead to a traffic accident. If necessary, use the Bluetooth Handsfree feature to make calls and keep the call as short as possible.
- Keep the volume low enough to hear external sounds. Driving without the ability to hear external sounds may lead to a traffic accident. Listening to a loud volume for a long time may cause hearing damage.

⚠ WARNING

■ About handling the system

- Do not disassemble or modify the system. Doing so may result in an accident, fire, or electric shock.

(Continued)

(Continued)

- Do not allow liquids or foreign substances to enter the system. Liquids or foreign substances may cause noxious fumes, a fire, or a system malfunction.
- Stop using the system if it malfunctions, such as no audio output or display. If you continue using the system when it is malfunctioning, it may lead to a fire, electric shock, or system failure.
- Do not touch the antenna during thunder or lightning because such an act may cause electric shock.

⚠ CAUTION

■ About operating the system

- Use the system with the engine running. Using the system for a long time when the engine is stopped may discharge the battery.

(Continued)

(Continued)

- Do not install unapproved products. Using unapproved products may cause an error while using the system. System errors caused by installing unapproved products are not covered under the warranty.

⚠ CAUTION

■ About handling the system

- Do not apply excessive force to the system. Excessive pressure on the screen may damage the LCD panel or the touch panel.
- When cleaning the screen or button panel, make sure to stop the engine and use a soft, dry cloth. Wiping the screen or buttons with a rough cloth or using solvents (alcohol, benzene, paint thinner, etc.) may scratch or chemically damage the surface.

(Continued)

(Continued)

- **If you attach a liquid-type air freshener to the fan louvre, the surface of the louvre may become deformed due to the flowing air.**
- **If you want to change the position of the installed device, please inquire with your place of purchase or service maintenance centre. Technical expertise is required to install or disassemble the device.**

✻ NOTICE

- If you experience any problems with the system, contact your place of purchase or dealer.
- Placing the audio system within an electromagnetic environment may result in noise interference.

Turning the system on or off

To turn on the system, start the engine.

- If you do not want to use the system while driving, you can turn off the system by pressing the POWER button on the control panel. To use the system again, press the POWER button again.

The system turns off when you stop the engine (ACC Off).

- When you turn back on the system, the previous mode and settings will remain intact.

⚠ WARNING

- **Some functions may be disabled for safety reasons while the vehicle is moving. They work only when the vehicle stops. Park your vehicle in a safe location before using any of them.**
- **Stop using the system if it malfunctions, such as no audio output or display. If you continue using the system when it is malfunctioning, it may lead to a fire, electric shock, or system failure.**

⚠ CAUTION

You can turn on the system when the key ignition switch is placed in the "ACC" or "ON" position. Using the system for an extended period without the engine running drains the battery. If you plan on using the system for a long time, start the engine.

Turning the display on or off

To prevent glare, you can turn off the screen. The screen can be turned off only while the system is on.

1. On the control panel, press the MENU/CLOCK button.
2. When the option selection window displays, turn the TUNE knob to select Display off, and then press the knob.

- To turn the screen back on, press any of the control panel buttons.

Getting to know the basic operations

You can select an item or adjust the settings by using the number buttons and the TUNE knob on the control panel.

Selecting an item

Numbered items

Press the corresponding number button.





Numberless items

Turn the TUNE knob to select the desired item, and then press the knob.





Adjusting the settings

Turn the TUNE knob to adjust the value, and then press the knob to save changes.
Turn the TUNE knob to the right to increase the value and turn the TUNE knob to the left to decrease the value.



RADIO

Turning on the radio

1. On the control panel, press the AUDIO button.
2. When the mode selection window displays, turn the TUNE knob to select the desired radio mode and then press the knob.

FM/AM Mode



1. Current radio mode
2. Radio station information
3. Preset list

Press the MENU/CLOCK button on the control panel to access the following menu options:

- **Autostore:** Save radio stations to the preset list.
- **Scan:** The system searches for radio stations with strong radio signals and plays each option for about five seconds.
- **Sound Settings:** You can change the settings related to sounds, such as location where sound will be concentrated and the output level for each range.
  - **Position:** Select a location where sound will be concentrated in the vehicle. Select Fade (Fader) or Balance, turn the TUNE knob to select the desired position, and then press the knob. To set sound to be centred in the vehicle, select Center.
  - **Equaliser (Tone):** Adjust the output level for each sound tone mode.
  - **Speed dependent vol.:** Set the volume to be adjusted automatically according to your driving speed.
- Mode popup: Set to display mode selection window when the AUDIO button is pressed on the control panel.

✻ NOTICE

- Depending on vehicle models or specifications, available options may vary.
- Depending on the system or amplifier specifications applied to your vehicle, available options may vary.

- **Date/Time:** You can change the date and time that are shown on the system display.
  - **Set date:** Set date to display on the system display.
  - **Set time:** Set time to display on the system display.
  - **Time format:** Select to display time in the 12 hour format or the 24 hour format.
  - **Display (Power Off):** Set to display the clock when the system power is off.
- **Language:** You can change the display language.

FM/AM Mode (With RDS)

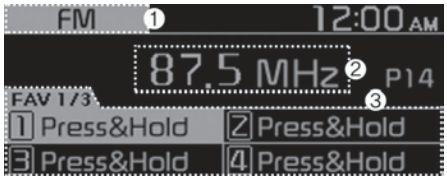

1. Current radio mode
2. Radio station information
3. Preset list

Press the MENU/CLOCK button on the control panel to access the following menu options:

- **Traffic announcement:** Activate or deactivate traffic announcements. Announcements and programmes will be received automatically if available.
- **Autostore:** Save radio stations to the preset list.
- **Scan:** The system searches for radio stations with strong radio signals and plays each option for about five seconds.
- **Mode popup:** Set to display mode selection window when the AUDIO button is pressed on the control panel.
- **Sound Settings:** You can change the settings related to sounds, such as location where sound will be concentrated and the output level for each range.
  - **Position:** Select a location where sound will be concentrated in the vehicle. Select Fade (Fader) or Balance, turn the TUNE knob to select the desired position, and then press the knob. To set sound to be centred in the vehicle, select Center.
  - **Equaliser (Tone):** Adjust the output level for each sound tone mode.
  - **Speed dependent vol.:** Set the volume to be adjusted automatically according to your driving speed.

✻ NOTICE

- Depending on vehicle models or specifications, available options may vary.
- Depending on the system or amplifier specifications applied to your vehicle, available options may vary.

- **Date/Time:** You can change the date and time that are shown on the system display.
  - **Set date:** Set date to display on the system display.
  - **Set time:** Set time to display on the system display.
  - **Time format:** Select to display time in the 12 hour format or the 24 hour format.
  - **Display (Power Off):** Set to display the clock when the system power is off.
- **Language:** You can change the display language.

Changing the radio mode

1. On the control panel, press the AUDIO button.
2. When the mode selection window displays, turn the TUNE knob to select the desired radio mode and then press the knob.
   - Each time you press the MODE button on the steering wheel, the radio mode switches to FM ▶ AM in order.

✻ NOTICE

- When the Mode popup is not selected in [MENU/CLOCK] Mode popup, press the AUDIO button on the control panel to change the radio mode.
  Each time you press the AUDIO button on the control panel, the radio mode switches to FM ▶ AM in order.

Scanning for available radio stations

You can listen to each radio station for a few seconds to test the reception and select the one you want.

1. From the radio screen, press the MENU/CLOCK button on the control panel.
2. When the option selection window displays, turn the TUNE knob to select **Scan**, and then press the knob.
   - The system searches for radio stations with strong radio signals and plays each option for about 5 seconds.
3. When you find the radio station you want to listen to, press the TUNE knob.
   - You can continue listening to the selected station.

Searching for radio stations

To search for the previous or next available radio station, press the SEEK button / TRACK button on the control panel.

- You can also press and hold the SEEK button / TRACK button to search for frequencies quickly. When you release the button, a radio station with a strong signal is selected automatically.

If you know the exact frequency of the radio station you want to listen to, turn the TUNE knob on the control panel to change the frequency.

Saving radio stations

You can save your favourite radio stations and listen to them by selecting them from the preset list.

Saving the current radio station

While listening to the radio, press and hold the desired number button on the control panel.

- The radio station you are listening to will be added to the selected number.
- To save the next page of the preset list, press the FAV button.

✻ NOTICE

- You can save up to 12 radio stations in each mode.
- If a station is already saved to the selected preset number, the station will be replaced by the station you are listening to.

Using the auto save function

You can search for radio stations in your area where there is a strong signal. The results of your search can be saved to the preset list automatically.

1. From the radio screen, press the MENU/CLOCK button on the control panel.
2. When the option selection window displays, turn the TUNE knob to select **Autostore**, and then press the knob.

Listening to saved radio stations

FM/AM Mode

1. Confirm the preset number for the radio station you want to listen to.
   - To view the next page of the preset list, press the [FAV] button.
2. On the control panel, press the desired number button.
   - Alternatively, push the Up/Down lever on the steering wheel to change the station.

MEDIA PLAYER

Using the media player

You can play music stored in various media storage devices, such as USB storage devices, smartphones.

1. Connect a device to the USB port in your vehicle.
   - Playback may start immediately depending on the device that you connect to the system.
2. On the control panel, press the AUDIO button.
3. When the mode selection window displays, turn the TUNE knob to select the desired mode and then press the knob.

✻ NOTICE

- To start the media player, press the AUDIO button on the control panel.
- You can also change the mode by press the MODE button repeatedly on the steering wheel.

(Continued)

(Continued)

- Make sure to connect or disconnect external USB devices with the system power turned off.
- When the Mode popup is not selected in MENU/CLOCK ▶ Mode popup, press the AUDIO button on the control panel to change the media player.
  Each time you press the AUDIO button on the control panel, the media mode switches to USB ▶ Bluetooth audio in order.
- Depending on vehicle models and specifications, available buttons or the appearance and layout of the USB port in your vehicle may vary.
- Do not connect a smartphone or an MP3 device to the system via multiple methods such as USB, Bluetooth, simultaneously. Doing so may cause a distorted noise or a system malfunction.

(Continued)

(Continued)

- When the equaliser function of the connected device and Equaliser (Tone) settings of the system are both activated, the effects may interfere with each other and may lead to sound degradation or distortion. Deactivate the device's equaliser function if possible.

Using the USB mode

You can play media files stored in portable devices, such as USB storage devices and MP3 players. Check compatible USB storage devices and file specifications before using the USB mode.
Connect your USB device to the USB port in the vehicle.

- Playback starts immediately.
- Press the AUDIO button on the control panel to display the mode selection window, turn the TUNE knob to select USB and then press the knob.



1. Current file number and total number of files
2. Playback time
3. Information about the song currently playing

Press the MENU/CLOCK button on the control panel to access the following menu options:

- **List:** Access the file list.
- **Folder List:** Access the folder list.
- **Information:** Display information about the song currently playing.
- **Sound Settings:** You can change the settings related to sounds, such as location where sound will be concentrated and the output level for each range.
  - **Position:** Select a location where sound will be concentrated in the vehicle. Select **Fade (Fader)** or **Balance**, turn the TUNE knob to select the desired position, and then press the knob. To set sound to be centred in the vehicle, select **Center**.
  - **Equaliser (Tone):** Adjust the output level for each sound tone mode.
  - **Speed dependent vol.:** Set the volume to be adjusted automatically according to your driving speed.
- **Song information (Media Display):** Select information such as **Folder/File** or **Artist/Title/Album** to display when playing MP3 files.
- **Mode popup:** Set to display mode selection window when the AUDIO button is pressed on the control panel.

✻ NOTICE

- Depending on vehicle models or specifications, available options may vary.

(Continued)

(Continued)

- Depending on the system or amplifier specifications applied to your vehicle, available options may vary.

- **Date/Time:** You can change the date and time that are shown on the system display.
  - **Set date:** Set date to display on the system display.
  - **Set time:** Set time to display on the system display.
  - **Time format:** Select to display time in the 12 hour format or the 24 hour format.
  - **Display (Power Off):** Set to display the clock when the system power is off.
- **Language:** You can change the display language.

Rewinding/Fast forwarding

On the control panel, press and hold the SEEK button / TRACK button.

- You can also push and hold the Up/Down lever on the steering wheel.

Restarting the current playback

On the control panel, press the TRACK button.

- You can also push the Down lever on the steering wheel.

Playing the previous or next song

To play the previous song, press the TRACK button twice on the control panel. To play the next song, press the SEEK button on the control panel.

- You can also use the Up/Down lever on the steering wheel.

✻ NOTICE

On the control panel, turn the [FILE] knob to find the desired song and press the knob to play the file.

Playing repeatedly

On the control panel, press the 1 RPT button. The repeat play mode changes each time you press it. The corresponding mode icon will be displayed on the screen.

Playing in random order

On the control panel, press the 2 SHFL button. The shuffle play mode is activated or deactivated each time you press it. When you activate the shuffle mode, the corresponding mode icon will be displayed on the screen.

Searching folders

1. On the control panel, press the MENU/CLOCK button.
2. When the option selection window displays, turn the TUNE knob to select the Folder List and then press the knob.
3. Navigate to the desired folder in the Folder List and then press the TUNE knob.
   - The first song in the selected folder will be played.

⚠ CAUTION

- **Start the engine of your vehicle before connecting a USB device to your system. Starting the engine with a USB device connected to the system may damage the USB device.**

(Continued)

(Continued)

- **Be careful of static electricity when connecting or disconnecting a USB device. A static discharge may cause a system malfunction.**
- **Be careful not to let your body or external objects contact the USB port. Doing so may cause an accident or a system malfunction.**
- **Do not connect and disconnect a USB connector repeatedly in a short time. Doing so may cause an error in the device or a system malfunction.**
- **Do not use a USB device for purposes other than playing files. Using USB accessories for charging or heating may cause poor performance or a system malfunction.**

✻ NOTICE

- When connecting a USB storage device, do not use an extension cable. Connect it directly to the USB port. If you use a USB hub or an extension cable, the device may not be recognized.
- Fully insert a USB connector into the USB port. Failure to do so may cause a communication error.
- When you disconnect a USB storage device, a distorted noise may occur.
- The system can play only files encoded in a standard format.
- The following types of USB devices may not be recognised or work correctly:
  - Encrypted MP3 players
  - USB devices not recognised as removable disks
- A USB device may not be recognised depending on its condition.

(Continued)

(Continued)

- Some USB devices may be incompatible with your system.
- Depending on the USB device's type, capacity, or the format of files, USB recognition time may be longer.
- Image and video playback are not supported.

BLUETOOTH

Connecting Bluetooth devices

Bluetooth is a short-range wireless networking technology. Via Bluetooth, you can connect nearby mobile devices wirelessly to send and receive data between connected devices. This enables you to use your devices effectively.
To use Bluetooth, you must first connect a Bluetooth-enabled device to your system, such as a mobile phone or an MP3 player. Ensure that the device you want to connect supports Bluetooth.

⚠ WARNING

- **Park your vehicle in a safe location before connecting Bluetooth devices. Distracted driving can cause a traffic accident and lead to personal injury or death.**

✻ NOTICE

- On your system, you can use only Bluetooth Handsfree and Audio features. Connect a mobile device that supports both features.
- Some Bluetooth devices may cause malfunctions to the audio system or make interference noises. In this case, storing the device in a different location may resolve the problem.
- Depending on the connected Bluetooth device or mobile phone, some functions may not be supported. For Bluetooth supporting devices details and compatibility, visit http://kiaeurope.nextgen-technology. net.
- If the system is not stable due to a vehicle-Bluetooth device communication error, delete the paired devices and connect the Bluetooth devices again.

(Continued)

(Continued)

- If Bluetooth connection is not stable, follow these steps to try again.
  1. Deactivate Bluetooth and reactivate it on the device. Then, reconnect the device.
  2. Turn the device off and on. Then, reconnect it.
  3. Remove the battery from the device and reinstall it. Then, turn the device on and reconnect it.
  4. Unregister the Bluetooth pairing on both the system and the device and then re-register and connect them.
- The Bluetooth connection is unavailable when the device's Bluetooth function is turned off. Be sure to turn on the device's Bluetooth function.

Pairing devices with your system

For Bluetooth connections, first pair your device with your system to add it to the system's list of Bluetooth devices. You can register up to five devices.

1. From the control panel, press the PHONE button, and then select **Phone ▶ Add new device.**
   - If you are pairing a device with your system for the first time, you can also press the Call/Answer button on the steering wheel.
2. On the Bluetooth device you want to connect, activate Bluetooth, search for your vehicle's system, and then select it.
   - Check the system's Bluetooth name, which is displayed in the new registration pop-up window on the system screen.

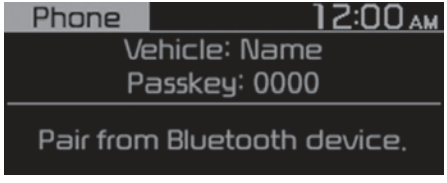

3. Enter or confirm the passkey to confirm the connection.
   - If the passkey input screen is displayed on the Bluetooth device screen, enter the passkey '0000' which is displayed on the system screen.
   - If the 6-digit passkey is displayed on the Bluetooth device screen, ensure that the Bluetooth passkey displayed on the Bluetooth device is the same as the passkey on the system screen and confirm the connection from the device.

✻ NOTICE

- The screen image in this manual is an example. Check your system screen for the exact vehicle name and Bluetooth device name.
- The default passkey is '0000'.
- It may take a while for the system to connect with the device after you permit the system to access the device. When a connection is made, the Bluetooth status icon appears at the top of the screen.

(Continued)

- You can change the permission settings via the mobile phone's Bluetooth settings menu. For more information, refer to your mobile phone's user guide.
- To register a new device, repeat steps 1 to 3.
- If you use the automatic Bluetooth connection function, a call may be switched to the vehicle's Handsfree when you are taking on the phone near the vehicle while the vehicle's engine is on. If you do not want the system to connect with the device automatically, deactivate Bluetooth on your device.
- When a device is connected to the system via Bluetooth, the device's battery may discharge faster.

Connecting a paired device

To use a Bluetooth device on your system, connect the paired device to the system.Your system can connect with only one device at a time.

1. From the control panel, press the PHONE button, and then select Phone ▶ Paired devices.
   - If there is no connected device, press the Call/Answer button on the steering wheel.
2. Turn the TUNE knob to select the device to connect, and then press the knob.
   - If another device is already connected to your system, disconnect it. Select the connected device to disconnect.

✻ NOTICE

- If a connection ends because a device is out of the connection range or a device error occurs, the connection will be restored automatically when the device enters the connection range or when the error is cleared.
- Depending on auto connection priority, connection to a device may take time.

Disconnecting a device

If you want to stop using a Bluetooth device or connect another device, disconnect your currently connected device.

1. From the control panel, press the PHONE button, and then select Phone ▶ Paired devices.
2. Turn the TUNE knob to select the connected device to disconnect, and then press the knob.
3. Press the 1 RPT button to select Yes.

Deleting paired devices

If you no longer want a Bluetooth device paired or if you want to connect a new device when the Bluetooth device list is full, delete paired devices.

1. From the control panel, press the PHONE button, and then select Phone ▶ Delete devices.
2. Turn the TUNE knob to select the device to delete, and then press the knob.
3. Press the 1 RPT button to select Yes.

✻ NOTICE

- When you delete a paired device, the Call history and Contacts stored in the system are also deleted.
- To re-use a deleted device, you must pair the device again.

Using a Bluetooth audio device

You can listen to music stored in the connected Bluetooth audio device via your vehicle's speakers.

1. On the control panel, press the AUDIO button.
2. When the mode selection window displays, turn the TUNE knob to select Bluetooth audio and then press the knob.

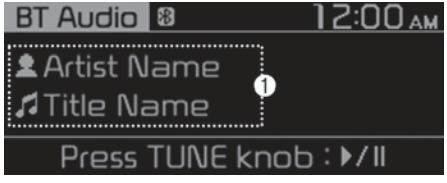

1. Information about the song currently playing

1. Press the MENU/CLOCK button on the control panel to access the following menu options.
2. Turn the TUNE knob to select option and then press the knob.

- **Mode popup:** Set to display mode selection window when the AUDIO button is pressed on the control panel.
- **Sound Settings:** You can change the settings related to sounds, such as location where sound will be concentrated and the output level for each range.
  - **Position:** Select a location where sound will be concentrated in the vehicle. Select **Fade (Fader)** or **Balance**, turn the TUNE knob to select the desired position, and then press the knob. To set sound to be centred in the vehicle, select **Center**.
  - **Equaliser (Tone):** Adjust the output level for each sound tone mode.
  - **Speed dependent vol.**: Set the volume to be adjusted automatically according to your driving speed.

✻ NOTICE

- Depending on vehicle models or specifications, available options may vary.
- Depending on the system or amplifier specifications applied to your vehicle, available options may vary.

- **Date/Time:** You can change the date and time that are shown on the system display.
  - **Set date:** Set date to display on the system display.
  - **Set time:** Set time to display on the system display.
  - **Time format:** Select to display time in the 12 hour format or the 24 hour format.
  - **Display (Power Off):** Set to display the clock when the system power is off.
- **Language:** You can change the display language.

Pausing/Resuming playback

To pause playback, press the TUNE knob on the control panel. To resume playback, press the TUNE knob again.

Restarting the current playback

On the control panel, press the TRACK button.

- You can also push the Down lever on the steering wheel.

Playing the previous or next song

To play the previous song, press the TRACK button twice on the control panel. To play the next song, press the SEEK button on the control panel.

- You can also use the Up/Down lever on the steering wheel.

✻ NOTICE

Depending on the connected Bluetooth device or mobile phone, playing the previous/next song may not be supported.

Playing repeatedly

On the control panel, press the 1 RPT button. The repeat play mode changes each time you press it. The corresponding mode icon will be displayed on the screen.

Playing in random order

On the control panel, press the 2 SHFL button. The shuffle play mode is activated or deactivated each time you press it. When you activate the shuffle mode, the corresponding mode icon will be displayed on the screen.

✻ NOTICE

- Depending on the connected Bluetooth device, mobile phone, or the music player you are using, playback controls may differ.
- Depending on the music player you are using, streaming may not be supported.

(Continued)

(Continued)

- Depending on the connected Bluetooth device or mobile phone, some functions may not be supported.
- If a Bluetooth enabled phone is being used to play music and it receives or makes a phone call, the music will stop.
- Receiving an incoming call or making an outgoing call while playing Bluetooth audio may result in audio interference.
- If you use the Bluetooth phone mode while using Bluetooth audio, playback may not automatically resume after you end the call depending on the connected mobile phone.
- Moving the track up/down while playing Bluetooth audio mode may result in pop noises with some mobile phones.

(Continued)

(Continued)

- The Rewinding/Fast forwarding function is not supported in the Bluetooth audio mode.
- The playlist feature is not supported in the Bluetooth audio mode.
- If the Bluetooth device is disconnected, Bluetooth audio mode will end.

Using a Bluetooth phone

You can use Bluetooth to talk on the phone hands free. View call information on the system screen, and make or receive calls safely and conveniently via the vehicle's built-in microphone and speakers.

⚠ WARNING

- **Park your vehicle in a safe location before connecting Bluetooth devices. Distracted driving can cause a traffic accident and lead to personal injury or death.**

(Continued)

(Continued)

- **Never dial a phone number or pick up your mobile phone while driving. Use of a mobile phone may distract your attention, making it difficult to recognize external conditions and reducing the ability to cope with unexpected situations, which may lead to an accident. If necessary, use the Bluetooth Handsfree feature to make calls and keep the call as short as possible.**

✻ NOTICE

- You cannot access the Phone screen if there is no connected mobile phone. To use the Bluetooth phone function, connect a mobile phone to the system.

(Continued)

(Continued)

- The Bluetooth Handsfree function may not work when you are passing out of the cellular service coverage area, such as when you are in a tunnel, underground, or in a mountainous area.
- Call quality may be degraded in the following environments:
  - The reception of the mobile phone is poor
  - The inside of the vehicle is noisy
  - The mobile phone is placed near metallic objects, such as a beverage can.
- Depending on the connected mobile phone, the volume and sound quality of the Bluetooth Handsfree may vary.

Making a call

If your mobile phone is connected to the system, you can make a call by selecting a name from your call history or contacts list.

1. On the control panel, press the PHONE button.
   - Alternatively, press the Call/ Answer button on the steering wheel.



2. Select a phone number.
   - To select a phone number from your favourites list, select **Favourites**.
   - To select a phone number from your call history, select **Call history**.
   - To select a phone number from your contacts list that downloaded from the connected mobile phone, select **Contacts**.
3. To end the call, press the 2 SHFL button on the control panel.
   - Alternatively, press the Call end button on the steering wheel.

Using the favourites list

1. From the Phone screen, turn the TUNE knob on the control panel to select **Favourites**, and then press the knob.

2. Turn the TUNE knob to select the desired contact, and then press the knob to make a phone call.



Press the MENU/CLOCK button on the control panel to access the following menu options:

- **Add new favourites:** Add a frequently used phone number to favourites.
- **Delete items:** Delete a selected favourites item.
- **Delete all:** Delete all favourites items.

✻ NOTICE

- You can register up to 20 favourites for each device.
- You must first download the contacts to the system to register favourites.

(Continued)

(Continued)

- The favourites list saved on the mobile phone is not downloaded to the system.
- Even if the contact information on the mobile phone is edited, the favourites on the system are not automatically edited. Delete and add the item to favourites again.
- When you connect a new mobile phone, your favourites set for the previous mobile phone will not be displayed, but they will remain in your system until you delete the previous phone from the device list.

Using your call history

1. From the Phone screen, turn the TUNE knob on the control panel to select **Call history**, and then press the knob.
2. Turn the TUNE knob to select the desired entry, and then press the knob to make a phone call.

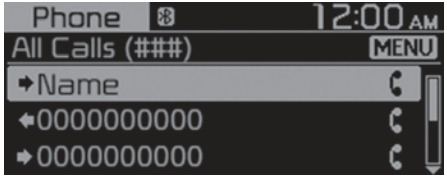

Press the MENU/CLOCK button on the control panel to access the following menu options:

- **Download:** Download your call history.
- **All calls:** View all call records.
- **Dialled calls:** View only dialled calls.
- **Received calls:** View only received calls.
- **Missed calls:** View only missed calls.

✻ NOTICE

- Some mobile phones may not support the download function.
- The call history is accessed only when the mobile phone is connected to the system.

(Continued)

(Continued)

- Calls from restricted IDs are not saved on the call history list.
- Up to 50 call records will be downloaded per individual list.
- Call duration and time information will not be displayed on the system screen.
- Permission is required to download your call history from the mobile phone. When you attempt to download data, you may need to permit the download on the mobile phone. If the download fails, check the mobile phone screen for any notification or the mobile phone's permission setting.
- When you download your call history, any old data will be deleted.

Using the contacts list

1. From the Phone screen, turn the TUNE knob on the control panel to select **Contacts**, and then press the knob.
2. Turn the TUNE knob to select the desired group of alphanumeric characters, and then press the knob.
3. Turn the TUNE knob to select the desired contact, and then press the knob to make a phone call.

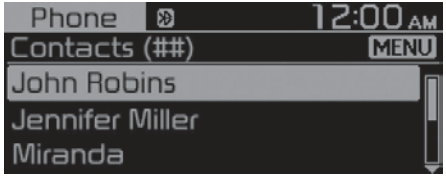

Press the MENU/CLOCK button on the control panel to access the following a menu option:

- **Download:** Download your mobile phone contacts.

✻ NOTICE

- Contacts can be viewed only when the Bluetooth device is connected.

(Continued)

(Continued)

- Only contacts in the supported format can be downloaded and displayed from the Bluetooth device. Contacts from some applications will not be included.
- Up to 2,000 contacts can be downloaded from your device.
- Some mobile phones may not support the download function.
- Depending on the system's specifications, some of the downloaded contacts may be lost.
- Contacts stored both in the phone and in the SIM card are downloaded. With some mobile phones, contacts in the SIM card may not be downloaded.
- Special characters and figures used in the contact name may not be displayed properly.

(Continued)

(Continued)

- Permission is required to download contacts from the mobile phone. When you attempt to download data, you may need to permit the download on the mobile phone. If the download fails, check the mobile phone screen for any notification or the mobile phone's permission setting.
- Depending on the mobile phone type or status, downloading may take longer.
- When you download your contacts, any old data will be deleted.
- You cannot edit or delete your contacts on the system.
- When you connect a new mobile phone, your contacts downloaded from the previous mobile phone will not be displayed, but they will remain in your system until you delete the previous phone from the device list.

Answering calls

When a call comes in, a notification pop-up window of the incoming call appears on the system screen.



To answer the call, press the **1 RPT** button on the control panel.

- Alternatively, press the Call/ Answer button on the steering wheel.

To reject the call, press the **2 SHFL** button on the control panel.

- Alternatively, press the Call end button on the steering wheel.

✻ NOTICE

- Depending on the mobile phone type, call rejection may not be supported.

(Continued)

(Continued)

- Once your mobile phone is connected to the system, the call sound may be output through the vehicle's speakers even after you exit the vehicle if the phone is within the connection range. To end the connection, disconnect the device from the system or deactivate Bluetooth on the device.

Using options during a call

During a call, you will see the call screen shown below. Press a button to perform the function you want.

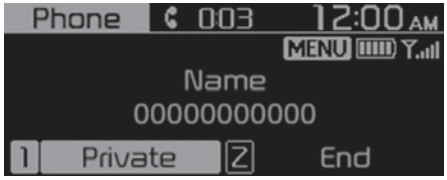

To switch the call to your mobile phone, press the **1 RPT** button on the control panel.

- Alternatively, press and hold the Call/ Answer button on the steering wheel.

To end the call, press the 2 SHFL button on the control panel.
- Alternatively, press the Call end button on the steering wheel.

Press the MENU/CLOCK button on the control panel to access the following a menu option:
- **Microphone Volume (Outgoing Volume):** Adjust the microphone volume or turn off the microphone so the other party cannot hear you.

✻ NOTICE

- If the caller information is saved in your contacts list, the caller's name and phone number will be displayed. If the caller information is not saved in your contacts list, only the caller's phone number will be displayed.
- You cannot switch to any other screen, such as the audio screen or the settings screen, during a Bluetooth call.

(Continued)

(Continued)

- Depending on the mobile phone type, call quality may vary. On some phones, your voice may be less audible to the other party.
- Depending on the mobile phone type, the phone number may not be displayed.
- Depending on the mobile phone type, the call switching function may not be supported.

SYSTEM STATUS ICONS

Status icons appear at the top of the screen to display the current system status.
Familiarise yourself with the status icons that appear when you perform certain actions or functions and their meanings.



Bluetooth

Icon	Description
	Battery level of connected Bluetooth device
	Mobile phone or audio device connected via Bluetooth
	Bluetooth call in progress
	Microphone turned off during Bluetooth call
	Downloading call history from a mobile phone connected via Bluetooth to the system
	Downloading contacts from a mobile phone connected via Bluetooth to the system

Signal strength

Icon	Description
	Signal strength of the mobile phone connected via Bluetooth

✻ NOTICE

- The battery level displayed on the screen may differ from the battery level displayed on the connected device.

(Continued)

(Continued)

- The signal strength displayed on the screen may differ from the signal strength displayed on the connected mobile phone.
- Depending on vehicle models and specifications, some status icons may not be displayed.

AUDIO SYSTEM SPECIFICATIONS

USB

Supported audio formats

- Audio file specification
  - WAVeform audio format
  - MPEG1/2/2.5 Audio Layer3
  - Windows Media Audio Ver 7.X/8.X
- Bit rates
  - MPEG1 (Layer3): 32/40/48/56/64/80/96/112/128/160/192/224/256/320 kbps
  - MPEG2 (Layer3): 8/16/24/32/40/48/56/64/80/96/112/128/144/160 kbps
  - MPEG2.5 (Layer3): 8/16/24/32/40/48/56/64/80/96/112/128/144/160 kbps
  - WMA (High Range): 48/64/80/96/128/160/192 kbps
- Bits Per Sample
  - WAV (PCM(Stereo)): 24 bit
  - WAV (IMA ADPCM): 4 bit
  - WAV (MS ADPCM): 4 bit
- Sampling frequency
  - MPEG1: 44100/48000/32000 Hz
  - MPEG2: 22050/24000/16000 Hz
  - MPEG2.5: 11025/12000/8000 Hz
  - WMA: 32000/44100/48000 Hz
  - WAV: 44100/48000 Hz
- Maximum length of folder/file names (Based on Unicode): 40 English or Korean characters
- Supported characters for folder/file names (Unicode support): 2,604 Korean characters, 94 alphanumeric characters, 4,888 Chinese characters in common use, 986 special characters
- Maximum number of folders: 1,000
- Maximum number of files: 5,000

✻ NOTICE

- Files that are not in a supported format may not be recognised or played, or information about them, such as the file name, may not be displayed properly.

(Continued)

(Continued)

- Only files with .mp3/.wma/.wav extensions can be recognised by the system. If the file is not in supported format, change the file format by using the latest encoding software.
- The device will not support files locked by DRM (Digital Rights Management).
- For MP3/WMA compression files and WAV file, differences in sound quality will occur depending on the bitrate. (Music files with a higher bitrate have a better sound quality.)
- Japanese or Simplified Chinese characters in folder or file names may not be displayed properly.

Supported USB storage devices

- Byte/Sector: 64 kbyte or less
- Format system: FAT12/16/32 (recommended), exFAT/NTFS

✻ NOTICE

- Operation is guaranteed only for a metal cover type USB storage device with a plug type connector.
  - USB storage devices with a plastic plug may not be recognised.
  - USB storage devices in memory card types, such as CF card or SD cards, may not be recognised.
- USB hard disk drives may not be recognised.
- When you use a large capacity USB storage device with multiple logical drives, only files stored on the first drive will be recognised.
- If an application program is loaded on a USB storage device, the corresponding media files may not play.
- Use USB 2.0 devices for better compatibility.

Bluetooth

- Bluetooth Power Class 2: -6 to 4 dBm
- Aerial power: Max 3 mW
- Frequency range: 2400 to 2483.5 MHz
- Bluetooth patch RAM software version: 1

TRADEMARKS

Other trademarks and trade names are those of their respective owners.

- The Bluetooth® word mark and logos are registered trademarks owned by Bluetooth SIG, Inc. and any use of such marks by Kia is under licence.



DECLARATION OF CONFORMITY

CE RED For EU

EU Declaration of Conformity [1]

HYUNDAI MOBIS

Product details [2]	
Product [3]	DIGITAL CAR AUDIO SYSTEM
Model [4]	ACBC1F1ET (ACB10D9GG, ACB10D9GN, ACB10D9BN, ACB10D9GT, ACB10D9GL, ACB10D9EG, ACB10D9EN, ACB10D9ET, ACB11D9ET, ACB10F1MG, ACB11F1GG, ACB11F1MG, ACB12F1RT)

We hereby declare, that the product above is in compliance with the essential requirements of the Directive 2014/53/EU by application of [5]

Applied Standards [6]	
Article [7] **3.2** Radio [8]	EN 300 328 V2.1.1, Draft EN 303 345 V1.1.7
Article [7] **3.1b** EMC [9]	EN 301 489-1 V2.1.1, Draft EN 301 489-3 V2.1.1, EN 301 489-17 V3.1.1, EN 55013:2013, EN 55032:2015, EN 55020:2007/A11:2011
Article [7] **3.1a** Safety [10], Health [11]	EN 60065:2014 (Eight Edition), EN 62311:2008

Manufacturer [12]
HYUNDAI MOBIS Co., Ltd.
203, Teheran-ro, Gangnam-gu,
Seoul, 135-977, Korea
Tel: +82-31-260-0098

Representative in the EU [13]
MOBIS Parts Europe N.V.
Wilhelm-Fay-Strabe 51,
Frankfurt Main, 65936, Germany
Tel: +49-69-85096-5011

Notified Body [14]
The MiCOM LABS performed a conformity assessment
of the technical documentation and issued the EU-type
examination certificate.
MiCOM LABS: 575 Boulder Court, Pleasanton,
California94566, USA

Signed By [15] 20/11/2017

This declaration of conformity is issued under the sole responsibility of the manufacturer. [16]

Seunghoon Choe
Representative
Hyundai MOBIS Co., Ltd.

RoHS for Taiwan

設備名稱：DIGITAL CAR AUDIO SYSTEM(Bluetooth)

型號(型式) : ACB10D9EG

單元 Unit	限用物質及其化學符號 Restricted substances and its chemical symbols					
	鉛 Lead (Pb)	汞 Mercury (Hg)	鎘 Cadmium (Cd)	六價鉻 Hexavalent chromium (Cr^{+6})	多溴聯苯 Polybrominated biphenyls (PBB)	多溴二苯醚 Polybrominated diphenyl ethers (PBDE)
外殼	○	○	○	○	○	○
顯示板	○	○	○	○	○	○
電路板	○	○	○	○	○	○
配件(按鈕)	○	○	○	○	○	○

備考1.〝超出0.1 wt %〞及〝超出0.01 wt %〞係指限用物質之百分比含量超出百分比含量基準值。

Note 1：“Exceeding 0.1 wt %” and “exceeding 0.01 wt %” indicate that the percentage content of the restricted substance exceeds the reference percentage value of presence condition.

備考2.〝○〞係指該項限用物質之百分比含量未超出百分比含量基準值。

Note 2：“○” indicates that the percentage content of the restricted substance does not exceed the percentage of reference value of presence.

備考3.〝—〞係指該項限用物質為排除項目。

Note 3：The “–” indicates that the restricted substance corresponds to the exemption.

FCC

This equipment has been tested and found to comply with the limits for a Class B digital device, pursuant to part 15 of the FCC Rules. These limits are designed to provide reasonable protection against harmful interference in a residential installation.

This equipment generates, uses and can radiate radio frequency energy and, if not installed and used in accordance with the instructions, may cause harmful interference to radio communications. However, there is no guarantee that interference will not occur in a particular installation. If this equipment does cause harmful interference to radio or television reception, which can be determined by turning the equipment off and on, the user is encouraged to try to correct the interference by one or more of the following measures:

- Reorient or relocate the receiving antenna.
- Increase the separation between the equipment and receiver.
- Connect the equipment into an outlet on a circuit different from that to which the receiver is connected.
- Consult the dealer or an experienced radio/TV technician for help.

This device complies with part 15 of the FCC Rules. Operation is subject to the following two conditions: (1) This device may not cause harmful interference, and (2) this device must accept any interference received, including interference that may cause undesired operation.
Caution: Any changes or modifications to this device not expressly approved by the party responsible for compliance could void your authority to operate the equipment.
This equipment complies with FCC radiation exposure limits set forth for an uncontrolled environment.
This equipment should be installed and operated with minimum 20 cm between the radiator and your body. This transmitter must not be collocated or operating in conjunction with any other antenna or transmitter unless authorized to do so by the FCC.

NCC for Taiwan

根據交通部低功率電波輻射性電機管理辦法 規定:

第十二條
經型式認證合格之低功率射頻電機，非經許可，公司、商號或使用者均不得擅自變更頻率、加大功率或變更原設計之特性及功能。

第十四條
低功率射頻電機之使用不得影響飛航安全及干擾合法通信；經發現有干擾現象時，應立即停用，並改善至無干擾時方得繼續使用。前項合法通信，指依電信法規定作業之無線電通信。
低功率射頻電機須忍受合法通信或工業、科學及醫療用電波輻射性電機設備之干擾。

Driving your vehicle

ENGINE EXHAUST CAN BE DANGEROUS! 6-04
Before driving 6-06
Before entering vehicle 6-06
Necessary inspections 6-06
Before starting 6-06
Key positions 6-08
Illuminated ignition switch 6-08
Ignition switch position 6-08
Starting the engine 6-10
Engine start/stop button 6-13
Illuminated engine start/stop button 6-13
Engine start/stop button position 6-13
Starting the engine 6-15
Stopping the gasoline engine/diesel engine (Manual Transaxle) 6-18
Manual transaxle 6-19
Manual transaxle operation 6-19
Good driving practices 6-21
Automatic transaxle 6-23
Automatic transaxle operation 6-23
Good driving practices 6-28
All wheel drive (AWD) 6-30
Tight corner brake effect 6-31
All wheel drive (AWD) transfer mode selection 6-32
For safe all wheel drive operation 6-34
Reducing the risk of a rollover 6-37
Brake system 6-39
Power brakes 6-39
Parking brake 6-40
Electronic parking brake (EPB) 6-42
AUTO HOLD 6-48
Anti-lock brake system (ABS) 6-50
Electronic stability control (ESC) 6-52
Vehicle stability management (VSM) 6-55
Hill-start assist control (HAC) 6-56
Trailer stability assist (TSA) 6-57
Good braking practices 6-57
FORWARD COLLISION-AVOIDANCE ASSIST (FCA) SYSTEM (EXCEPT MIDDLE EAST) – SENSOR FUSION TYPE (FRONT RADAR+FRONT VIEW CAMERA) 6-59
System setting and activation 6-59
FCA warning message and system control 6-61
Brake operation 6-61
FCA sensor (Front Radar + Front View Camera) 6-62
System malfunction 6-64
Limitation of the system 6-65
FORWARD COLLISION-AVOIDANCE ASSIST (FCA) SYSTEM (FOR MIDDLE EAST) – SENSOR FUSION TYPE (FRONT RADAR+FRONT VIEW CAMERA) 6-71
System setting and activation 6-71
FCA warning message and system control 6-72
Brake operation 6-73
FCA sensor (Front Radar + Front View Camera) 6-74
System malfunction 6-76
Limitation of the system 6-77
Downhill Brake Control (DBC) 6-82
DBC operation 6-83
Good braking practices 6-85
Cruise control system 6-86
Cruise control switch 6-87

To set cruise control speed..... 6-87
To increase cruise control set speed..... 6-88
To decrease the cruising speed..... 6-88
To temporarily accelerate with the cruise control on:.... 6-88
To cancel cruise control, do one of the following..... 6-89
To resume cruising speed at more than approximately 6-89
To turn cruise control off, do one of the following:..... 6-89
Manual speed limit assist 6-91
To set speed limit..... 6-91
To turn off the Manual Speed Limit Assist, do one of the following..... 6-92
Smart cruise control with stop & go system 6-94
Smart cruise control switch..... 6-94
Smart cruise control speed..... 6-95
To set speed limit control 6-95
Smart cruise control cancelled..... 6-98
Smart cruise control vehicle-to-vehicle distance setting..... 6-100
Sensor to detect distance to the vehicle ahead..... 6-103
To adjust the sensitivity of smart cruise control..... 6-104
To convert to cruise control mode..... 6-105
Limitations of the system..... 6-105
Drive mode integrated control system 6-110
DRIVE mode..... 6-110
Lane keeping assist (LKA) system 6-112
LKA system operation..... 6-113
LKA system malfunction..... 6-116
Driver's attention..... 6-117
LKA system function change..... 6-118
ISG (Idle Stop and Go) System (if equipped, for Brazil).... 6-119
Auto stop..... 6-119
Auto start..... 6-120
Condition of ISG system operation..... 6-120
ISG system deactivation..... 6-121
ISG system malfunction..... 6-121
Blind Spot Collision Warning (BCW) / Rear Cross-Traffic Collision Warning (RCCW) 6-123
Blind-spot Collision Warning (BCW)..... 6-123
System setting and activation..... 6-124
Rear Cross-Traffic Collision Warning (RCCW)..... 6-126
System setting and activation..... 6-126
Sensor to detect rear / side range..... 6-128
Limitations of the system..... 6-130
Driver attention warning (DAW,)..... 6-135
System setting and activation..... 6-135
Resetting the system..... 6-136
System standby..... 6-136
System malfunction..... 6-137
Economical operation..... 6-139
Special driving conditions..... 6-141
Hazardous driving conditions..... 6-141
Reducing the risk of a rollover..... 6-141
Rocking the vehicle..... 6-142
Smooth cornering..... 6-143
Driving at night..... 6-143
Driving in the rain..... 6-144
Driving in flooded areas..... 6-144
Driving off-road..... 6-145
Highway driving..... 6-145

Winter driving..... 6-146
Snowy or icy conditions..... 6-146
Use high quality ethylene glycol coolant..... 6-148
Check battery and cables..... 6-148
Change to "winter weight" oil if necessary..... 6-148
Check spark plugs and ignition system..... 6-148
To keep locks from freezing..... 6-148
Use approved window washer anti-freeze in system.... 6-149
Don't let your parking brake freeze..... 6-149
Don't let ice and snow accumulate underneath..... 6-149
Carry emergency equipment..... 6-149
Trailer towing..... 6-150
Hitches..... 6-151
Safety chains..... 6-152
Trailer brakes..... 6-152
Driving with a trailer..... 6-152
Maintenance when trailer towing..... 6-155
If you decide to pull a trailer..... 6-155
For Europe..... 6-156
Weight of the trailer..... 6-157
Weight of the trailer tongue..... 6-157
Vehicle weight..... 6-159
Base curb weight..... 6-159
Vehicle curb weight..... 6-159
Cargo weight..... 6-159
GAW (Gross axle weight)..... 6-159
GAWR (Gross axle weight rating)..... 6-159
GVW (Gross vehicle weight)..... 6-159
GVWR (Gross vehicle weight rating)..... 6-159
Overloading..... 6-159

ENGINE EXHAUST CAN BE DANGEROUS!

⚠ WARNING

■ ENGINE EXHAUST CAN BE DANGEROUS!

Engine exhaust fumes can be extremely dangerous. If, at any time, you smell exhaust fumes inside the vehicle, open the windows immediately.

- **Do not inhale exhaust fumes.**
  Exhaust fumes contain carbon monoxide, a colorless, odorless gas that can cause unconsciousness and death by asphyxiation.
- **Be sure the exhaust system does not leak.**
  The exhaust system should be checked whenever the vehicle is raised to change the oil or for any other purpose.
  If you hear a change in the sound of the exhaust or if you drive over something that strikes the underneath side of the vehicle, have the system checked by a professional workshop. Kia recommends to visit an authorized Kia dealer/service partner.
- **Do not run the engine in an enclosed area.**
  Letting the engine idle in your garage, even with the garage door open, is a hazardous practice. Never run the engine in your garage any longer than it takes to start the engine and back the vehicle out.
- **Avoid idling the engine for prolonged periods with people inside the vehicle.**
  If it is necessary to idle the engine for a prolonged period with people inside the vehicle, be sure to do so only in an open area with the air intake set at "Fresh" and fan operating at one of the higher speeds so fresh air is drawn into the interior.

If you must drive with the tailgate/trunk open because you are carrying objects that make this necessary:

1. **Close all windows.**
2. **Open side vents.**
3. **Set the air intake control at "Fresh", the air flow control at "Floor" or "Face" and the fan at one of the higher speeds.**

(Continued)

(Continued)

To assure proper operation of the ventilation system, be sure the ventilation air intakes located just in front of the windshield are kept clear of snow, ice, leaves or other obstructions.

BEFORE DRIVING

Before entering vehicle

- Be sure that all windows, outside mirror(s), and outside lights are clean.
- Check the condition of the tires.
- Check under the vehicle for any sign of leaks.
- Be sure there are no obstacles behind you if you intend to back up.

Necessary inspections

Fluid levels, such as engine oil, engine coolant, brake fluid, and washer fluid should be checked on a regular basis, with the exact interval depending on the fluid. Further details are provided in Chapter 8, Maintenance.

⚠ WARNING

Driving while distracted can result in a loss of vehicle control, that may lead to an accident, severe personal injury, and death. The driver's primary responsibility is in the safe and legal operation of a vehicle, and use of any handheld devices, other equipment, or vehicle systems which

(Continued)

(Continued)

take the driver's eyes, attention and focus away from the safe operation of a vehicle or which are not permissible by law should never be used during operation of the vehicle.

Before starting

- Close and lock all doors.
- Position the seat so that all controls are easily reached.
- Adjust the inside and outside rear-view mirrors.
- Be sure that all lights work.
- Check all gauges.
- Check the operation of warning lights when the ignition switch is turned to the ON position.
- Release the parking brake and make sure the brake warning light goes out.

For safe operation, be sure you are familiar with your vehicle and its equipment.

⚠ WARNING

All passengers must be properly belted whenever the vehicle is moving. Refer to "Seat belts" on page 3-16 for more information on their proper use.

⚠ WARNING

Always check the surrounding areas near your vehicle for people, especially children, before putting a vehicle into "D (Drive)" or "R (Reverse)".

⚠ WARNING

■ Driving under the influence of alcohol or drugs

Drinking and driving is dangerous. Drunk driving is the number one contributor to the highway death toll each year. Even a small amount of alcohol will affect your reflexes, perceptions and judgement. Driving

(Continued)

(Continued)

while under the influence of drugs is as dangerous or more dangerous than driving drunk.
You are much more likely to have a serious accident if you drink or take drugs and drive.
If you are drinking or taking drugs, don't drive. Do not ride with a driver who has been drinking or taking drugs. Choose a designated driver or call a cab.

⚠ WARNING

- When you intend to park or stop the vehicle with the engine on, be careful not to depress the accelerator pedal for a long period of time. It may overheat the engine or exhaust system and cause fire.

(Continued)

(Continued)

- When you make a sudden stop or turn the steering wheel rapidly, loose objects may drop on the floor and it could interfere with the operation of the foot pedals, possibly causing an accident. Keep all things in the vehicle safely stored.
- If you do not focus on driving, it may cause an accident. Be careful when operating what may disturb driving such as audio or heater. It is the responsibility of the driver to always drive safely.

KEY POSITIONS

Illuminated ignition switch

■ Type A

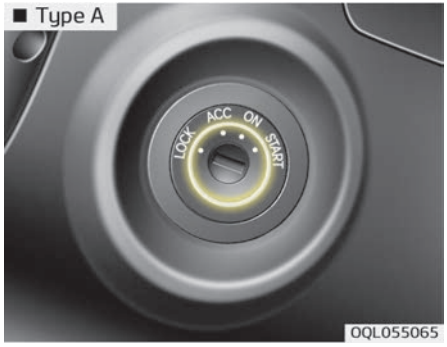

OQL055065

■ Type B

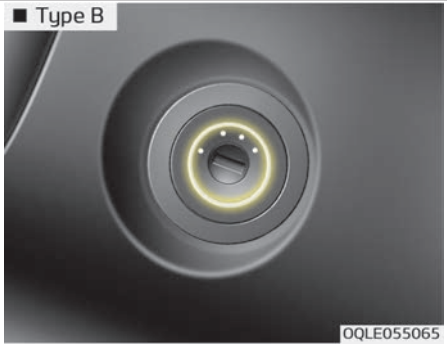

OQLE055065

Whenever a front door is opened, the ignition switch will be illuminated for your convenience, provided the ignition switch is not in the ON position. The light will go off immediately when the ignition switch is turned on or go off after about 30 seconds when the door is closed.

Ignition switch position

LOCK

■ Type A



OQL055066

■ Type B



OQLE055066

The steering wheel locks to protect against theft. The ignition key can be removed only in the LOCK position.

ACC (Accessory)

The steering wheel is unlocked and electrical accessories are operative.

✻ NOTICE

If difficulty is experienced turning the ignition switch to the ACC position, turn the key while turning the steering wheel right and left to release the tension.

ON

The warning lights can be checked before the engine is started. This is the normal running position after the engine is started.

Do not leave the ignition switch ON if the engine is not running to prevent battery discharge.

START

Turn the ignition key to the START position to start the engine. The engine will crank until you release the key; then it returns to the ON position. The brake warning lamp can be checked in this position.

⚠ WARNING

■ Ignition key

- **Never turn the ignition switch to LOCK or ACC while the vehicle is moving.This would result in loss of directional control and braking function, which could cause an accident.**

(Continued)

(Continued)

- **The anti-theft steering column lock (if equipped) is not a substitute for the parking brake. Before leaving the driver's seat, always make sure the shift lever is engaged in 1st gear for the manual transaxle or P (Park) for the automatic transaxle, set the parking brake fully and shut the engine off. Unexpected and sudden vehicle movement may occur if these precautions are not taken.**
- **Never reach for the ignition switch, or any other controls through the steering wheel while the vehicle is in motion. The presence of your hand or arm in this area could cause a loss of vehicle control, an accident and serious bodily injury or death.**
- **Do not place any movable objects around the driver's seat as they may move while driving, interfere with the driver and lead to an accident.**

Starting the engine

⚠ WARNING

- **Always wear appropriate shoes when operating your vehicle. Unsuitable shoes (high heels, ski boots,etc.) may interfere with your ability to use the brake and accelerator pedal, and clutch (if equipped).**
- **Do not start the vehicle with the accelerator pedal depressed. The vehicle can move and lead to an accident.**
- **Wait until the engine rpm is normal. The vehicle may suddenly move if the brake padel is released when the rpm is high.**

✻ NOTICE

■ Kick down mechanism

Use the kick down mechanism for maximum acceleration. Depress the accelerator pedal beyond the pressure point. The automatic transmission will shift to a lower gear depending on the engine speed.

(Continued)

Starting the gasoline engine

1. Make sure the parking brake is applied.
2. Manual Transaxle - Depress the clutch pedal fully and shift the transaxle into Neutral. Keep the clutch pedal and brake pedal depressed while turning the ignition switch to the start position.
   Automatic Transaxle - Place the transaxle shift lever in P (Park). Depress the brake pedal fully.
   You can also start the engine when the shift lever is in the N (Neutral) position.
3. Turn the ignition switch to START and hold it there until the engine starts (a maximum of 10 seconds), then release the key.
   *It should be started **without depressing the accelerator pedal.***
4. Do not wait for the engine to warm up while the vehicle remains stationary.
   Start driving at moderate engine speeds (Steep accelerating and decelerating should be avoided).

⚠ CAUTION

If the engine stalls while you are in motion, do not attempt to move the shift lever to the P (Park) position. If traffic and road conditions permit, you may put the shift lever in the N (Neutral) position while the vehicle is still moving and turn the ignition switch to the START position in an attempt to restart the engine.

⚠ CAUTION

- **Do not engage the starter for more than 10 seconds. If the engine stalls or fails to start, wait 5 to 10 seconds before reengaging the starter. Improper use of the starter may damage it.**

(Continued)

(Continued)

- **Do not turn the ignition switch to the START position with the engine running. It may damage the starter.**

Starting the diesel engine

To start the diesel engine when the engine is cold, it has to be pre-heated before starting the engine and then have to be warmed up before starting to drive.

1. Make sure the parking brake is applied.

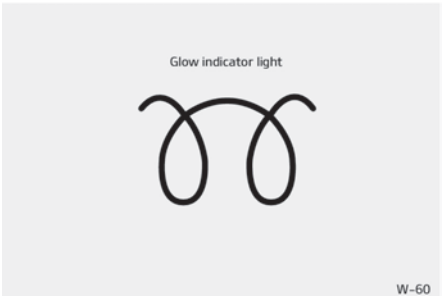

2. Manual Transaxle - Depress the clutch pedal fully and shift the transaxle into Neutral. Keep the clutch pedal and brake pedal depressed while turning the ignition switch to the start position.
   Automatic Transaxle - Place the transaxle shift lever in P(park). Depress the brake pedal fully.

   You can also start the engine when the shift lever is in the N(neutral) position.
3. Turn the ignition switch to the ON position to pre-heat the engine.
   Then the glow indicator light will illuminate.
4. If the glow indicator light goes out, turn the ignition switch to the START position and hold it there until the engine starts (a maximum of 10 seconds), then release the key.

✻ NOTICE

If the engine does not start within 10 seconds after the preheating is completed, turn the ignition key once more to the LOCK position for 10 seconds, and then to the ON position, in order to preheat again.

Starting and stopping the engine for turbocharger intercooler

1. Do not race or accelerate the engine immediately after starting.
   If the engine is cold, idle for several seconds before sufficient lubrication is ensured in the turbocharger unit.
2. After high speed or extended driving, requiring a heavy engine load, run the engine on idle condition about 1 minute before turning it off.
   This idle time will allow the turbocharger to cool prior to shutting the engine off.

⚠ CAUTION

Do not turn off the engine immediately after it has been subjected to a heavy load. Doing so may cause severe damage to the engine or turbo charger unit.

Stopping the gasoline engine/diesel engine (Manual Transaxle)

1. Make sure the vehicle is completely stopped and keep the clutch pedal and brake pedal depressed.

2. Shift the transaxle into Neutral while depressing the clutch pedal and brake pedal.
3. Engage the parking brake while depressing the brake pedal.
4. Turn the ignition key to the LOCK position and remove it.

ENGINE START/STOP BUTTON (IF EQUIPPED)

Illuminated engine start/stop button



Whenever the front door is opened, the engine start/stop button will illuminate for your convenience. The light will go off after about 30 seconds when the door is closed. It will also go off immediately when the engine start/stop button is in the ON position.

Engine start/stop button position

OFF



Not illuminated

With manual transaxle

To turn off the engine (START/RUN position) or vehicle power (ON position), stop the vehicle then press the engine start/stop button.

With automatic transaxle

To turn off the engine (START/RUN position) or vehicle power (ON position), press the engine start/stop button with the shift lever in the P (Park) position. When you press the engine start/stop button without the shift lever in the P (Park) position, the engine start/stop button will not change to the OFF position but to the ACC position.

Vehicles equipped with anti-theft steering column lock

The steering wheel locks when the engine start/stop button is in the OFF position to protect you against theft. It locks when the door is opened.

If the steering wheel is not locked properly when you open the driver's door, the warning chime will sound. Try locking the steering wheel again. If the problem is not solved, have the system checked by a professional workshop. Kia recommends to visit an authorized Kia dealer/service partner.
In addition, if the engine start/stop button is in the OFF position after the driver's door is opened, the steering wheel will not lock and the warning chime will sound. In such a situation, close the door. Then the steering wheel will lock and the warning chime will stop.

✻ NOTICE

If the steering wheel doesn't unlock properly, the engine start/stop button will not work. Press the engine start/stop button while turning the steering wheel right and left to release the tension.

⚠ CAUTION

You are able to turn off the engine (START/RUN) or vehicle power (ON), only when the vehicle is not in motion. In an emergency situation while the vehicle is in motion, you are able to turn the engine off and to the ACC position by pressing the engine start/stop button for more than 2 seconds or 3 times successively within 3 seconds. If the vehicle is still moving, you can restart the engine without depressing the brake pedal by pressing the engine start/stop button with the shift lever in the N (Neutral) position.

ACC (Accessory)



Amber

With manual transaxle

Press the engine start/stop button when the button is in the OFF position without depressing the clutch pedal.

With automatic transaxle

Press the engine start/stop button while it is in the OFF position without depressing the brake pedal.

The steering wheel unlocks (if equipped with anti-theft steering column lock) and electrical accessories are operational.

If the engine start/stop button is in the ACC position for more than 1 hour, the button is turned off automatically to prevent battery discharge.

ON



Super red

With manual transaxle

Press the engine start/stop button when the button is in the ACC position without depressing the clutch pedal.

With automatic transaxle

Press the engine start/stop button while it is in the ACC position without depressing the brake pedal.

The warning lights can be checked before the engine is started. Do not leave the engine start/stop button in the ON position for a long time. The battery may discharge, because the engine is not running.

START/RUN



Not illuminated

With manual transaxle

To start the engine, depress the clutch pedal and brake pedal, then press the engine start/stop button with the shift lever in the N (Neutral) position.

With automatic transaxle

To start the engine, depress the brake pedal and press the engine start/stop button with the shift lever in the P (Park) or the N (Neutral) position. For your safety, start the engine with the shift lever in the P (Park) position.

✻ NOTICE

If you press the engine start/stop button without depressing the clutch pedal for manual transaxle vehicles or without depressing the brake pedal for automatic transaxle vehicles, the engine will not start and the engine start/stop button changes as follows:

OFF ➔ ACC ➔ ON ➔ OFF or ACC

✻ NOTICE

If you leave the engine start/stop button in the ACC or ON position for a long time, the battery will discharge.

⚠ WARNING

- **Never press the engine start/stop button while the vehicle is in motion. This would result in loss of directional control and braking function, which could cause an accident.**
- **The anti-theft steering column lock (if equipped) is not a substitute for the parking brake. Before leaving the driver's seat, always make sure the shift lever is engaged in P (Park), set the parking brake fully and shut the engine off. Unexpected and sudden vehicle movement may occur if these precautions are not taken.**

(Continued)

(Continued)

- **Never reach for the engine start/stop button or any other controls through the steering wheel while the vehicle is in motion. The presence of your hand or arm in the area could cause loss of vehicle control, an accident and serious bodily injury or death.**
- **Do not place any movable objects around the driver's seat as they may move while driving, interfere with the driver and lead to an accident.**

Starting the engine

⚠ WARNING

- **Always wear appropriate shoes when operating your vehicle. Unsuitable shoes (high heels, ski boots,etc.) may interfere with your ability to use the brake, accelerator and clutch pedal.**

(Continued)

(Continued)

- **Do not start the vehicle with the accelerator pedal depressed. The vehicle can move and lead to an accident.**
- **Wait until the engine rpm is normal. The vehicle may suddenly move if the brake padel is released when the rpm is high.**

✻ NOTICE

■ Kick down mechanism (if equipped)

If your vehicle is equipped with a kick down mechanism in the accelerator pedal, it prevents you from driving at full throttle unintentionally by making the driver require increased effort to depress the accelerator pedal. However, if you depress the pedal more than approximately 82%, the vehicle can be at full throttle and the accelerator pedal will be easier to depress. This is not a malfunction but a normal condition.

Starting the gasoline engine

1. Carry the smart key or leave it inside the vehicle.
2. Make sure the parking brake is firmly applied.
3. **Manual Transaxle** - Depress the clutch pedal fully and shift the transaxle into Neutral. Keep the clutch pedal and brake pedal depressed while starting the engine.
   Automatic transaxle - Place the transaxle shift lever in P (Park). Depress the brake pedal fully.

   You can also start the engine when the shift lever is in the N (Neutral) position.
4. Press the engine start/stop button. It should be started without depressing the accelerator.
5. Do not wait for the engine to warm up while the vehicle remains stationary.
   Start driving at moderate engine speeds. (Steep accelerating and decelerating should be avoided.)

Starting the diesel engine

To start the diesel engine when the engine is cold, it has to be pre-heated before starting the engine and then have to be warmed up before starting to drive.

1. Make sure the parking brake is applied.
2. **Manual Transaxle** - Depress the clutch pedal fully and shift the transaxle into Neutral. Keep the clutch pedal and brake pedal depressed while pressing the engine start/stop button to the START position.
   Automatic Transaxle - Place the transaxle shift lever in P (Park). Depress the brake pedal fully.

   You can also start the engine when the shift lever is in the N (Neutral) position.

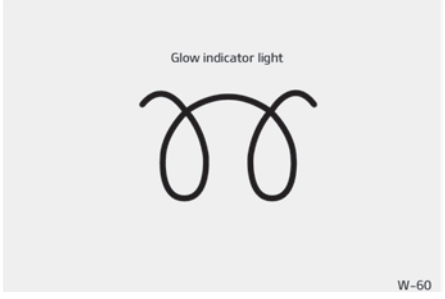

3. Press the engine start/stop button while depressing the brake pedal.
4. Continue depressing the brake pedal until the illuminated glow indicator goes off (approximately 5 seconds).

5. The engine starts running when the glow indicator goes off.

✻ NOTICE

If the engine start/stop button is pressed once more while the engine is pre-heating, the engine may start.

Starting and stopping the engine for turbocharger intercooler

1. Do not race or accelerate the engine immediately after starting.
   If the engine is cold, idle for several seconds before sufficient lubrication is ensured in the turbocharger unit.
2. After high speed or extended driving, requiring a heavy engine load, idle the engine about 1 minute before turning it off.
   This idle time will allow the turbocharger to cool prior to shutting the engine off.

⚠ CAUTION

Do not turn the engine off immediately after it has been subjected to a heavy load. Doing so may cause severe damage to the engine or turbocharger unit.

- Even if the smart key is in the vehicle, if it is far away from you, the engine may not start.
- When the engine start/stop button is in the ACC position or above, if any door is opened, the system checks for the smart key. If the smart key is not in the vehicle, a message "Key is not in the vehicle" will appear on the LCD display. And if all doors are closed, the chime will sound for 5 seconds. The indicator or warning will turn off while the vehicle is moving. Always have the smart key with you.

⚠ WARNING

The engine will start, only when the smart key is in the vehicle.
Never allow children or any person who is unfamiliar with the vehicle
(Continued)

(Continued)

touch the engine start/stop button or related parts.

⚠ CAUTION

If the engine stalls while the vehicle is in motion, do not attempt to move the shift lever to the P (Park) position. If the traffic and road conditions permit, you may put the shift lever in the N (Neutral) position while the vehicle is still moving and press the engine start/stop button in an attempt to restart the engine.



✻ NOTICE

- If the battery is weak or the smart key does not work correctly, you can start the engine by pressing the engine start/stop button with the smart key.
  The side with the lock button should be contacted directly.
  When you press the engine start/stop button directly with the smart key, the smart key should contact the button at a right angle.
- When the stop lamp fuse is blown, you cannot start the engine normally.
  Replace the fuse with a new one. If it is not possible, you can start the engine by pressing the engine start/stop button for 10 seconds while it is in the ACC position. The engine can start without depressing the brake pedal. But for your safety always depress the brake and clutch pedal before starting the engine.

⚠ CAUTION

Do not press the engine start/stop button for more than 10 seconds except when the stop lamp fuse is blown.

Stopping the gasoline engine/ diesel engine (Manual Transaxle)

1. Make sure the vehicle is completely stopped and keep the clutch pedal and brake pedal depressed.
2. Shift the transaxle into Neutral while depressing the clutch pedal and brake pedal.
3. Engage the parking brake while depressing the brake pedal.
4. Turn the ignition key to the LOCK position and remove it.

MANUAL TRANSAXLE (IF EQUIPPED)

Manual transaxle operation



- The manual transaxle has 6 forward gears.
  This shift pattern is imprinted on the shift knob. The transaxle is fully synchronized in all forward gears so shifting to either a higher or a lower gear is easily accomplished.
- Depress the clutch pedal down fully while shifting, then release it slowly.
  If your vehicle is equipped with an ignition lock switch, the engine will not start when starting the engine without depressing the clutch pedal.
- If your vehicle is equipped with a clutch lock system, the engine will not start when starting the engine without depressing the clutch pedal.
- The shift lever must return to the neutral position before shifting into R (Reverse). The button located immediately below the shift knob must be pushed upward while moving the shift lever to the R (Reverse) position.
- *Make sure the vehicle is completely stopped before shifting into R (Reverse).*

  Never operate the engine with the tachometer (rpm) in the red zone.

⚠ CAUTION

- **When downshifting from 5 (Fifth) gear to 4 (Fourth) gear, caution should be taken not to inadvertently move the shift lever sideways in such a manner that second gear is engaged. Such a drastic downshift may cause the engine speed to increase to the point that the tachometer will enter the red-zone. Such overrevving of the engine may possibly cause engine and transaxle damage.**
- **Do not downshift more than 2 gears or downshift the gear when the engine is running at high speed (5,000 RPM or higher). Such a downshifting may damage the engine, clutch and the transaxle.**
- **When shifting between 5th and 6th gear, you should always push the gear level all the way to the right. You could otherwise shift unintentionally into 3rd or 4th gear and damage the transaxle.**

- During cold weather, shifting may be difficult until the transaxle lubricant has warmed up. This is normal and not harmful to the transaxle.

- If you've come to a complete stop and it's hard to shift into 1 (First) or R (Reverse), put the shift lever in neutral position and release the clutch. Press the clutch pedal back down, and then shift into 1 (First) or R (Reverse) gear position.

⚠ CAUTION

- **To avoid premature clutch wear and damage, do not drive with your foot resting on the clutch pedal. Also, don't use the clutch to hold the vehicle stopped on an uphill grade, while waiting for a traffic light, etc.**
- **Do not use the shift lever as a handrest during driving, as this can result in premature wear of the transaxle shift forks.**
- **When operating the clutch pedal, press the clutch pedal down fully. If you don't press the clutch pedal fully, the clutch may be damaged or noise may occur.**

(Continued)

(Continued)

- **To prevent possible damage to the clutch system, do not start with the 2nd (second) gear engaged except when you start on a slippery road.**

⚠ WARNING

- **Before leaving the driver's seat, always set the parking brake fully and shut the engine off. Then make sure the transaxle is shifted into 1 (First) gear when the vehicle is parked on a level or uphill grade, and shifted into R (Reverse) on a downhill grade. Unexpected and sudden vehicle movement can occur if these precautions are not followed in the order identified.**

(Continued)

(Continued)

- **If your vehicle has a manual transaxle not equipped with a ignition lock switch, it may move and cause a serious accident when starting the engine without depressing the clutch pedal while the parking brake is released and the shift lever not in the neutral position.**
- **Do not use the engine brake (shifting from a high gear to lower gear) rapidly on slippery roads. The vehicle may slip causing an accident.**

⚠ CAUTION

- **If half-clutch *1 driving style is adopted, or driver's foot is placed on the pedal while the driving, the clutch may be damaged or worn out prematurely.**
- **While parking on a steep grade, do not use half clutch method to park the vehicle. It will cause premature wear of the clutch disc.**

(Continued)

(Continued)

- **While driving at fast speed, do not abruptly shift to low speed. It may lead to engine and transaxle damage.**

Using the clutch

The clutch pedal should be depressed all the way to the floor before shifting, then released slowly. The clutch pedal should always be fully released while driving. Do not rest your foot on the clutch pedal while driving. This can cause unnecessary wear. Do not partially engage the clutch to hold the vehicle on an incline. This causes unnecessary wear. Use the foot brake or parking brake to hold the vehicle on an incline. Do not operate the clutch pedal rapidly and repeatedly.

*1 Half clutch?
A condition where the clutch is half-engaged and sliding. It may occur when the clutch pedal is partially depressed (not fully depressed), or vehicle power is transferred to the clutch before the pedal is fully let go.

Downshifting

When you must slow down in heavy traffic or while driving up steep hills, downshift before the engine starts to labor. Downshifting reduces the chance of stalling and gives better acceleration when you again need to increase your speed. When the vehicle is traveling down steep hills, downshifting helps maintain safe speed and prolongs brake life.

Good driving practices

- Never take the vehicle out of gear and coast down a hill. This is extremely hazardous. Always leave the vehicle in gear.
- Don't "ride" the brakes. This can cause them to overheat and malfunction. Instead, when you are driving down a long hill, slow down and shift to a lower gear. When you do this, engine braking will help slow down the vehicle.
- Slow down before shifting to a lower gear. This will help avoid over-revving the engine, which can cause damage.
- Slow down when you encounter cross winds. This gives you much better control of your vehicle.
- Be sure the vehicle is completely stopped before you attempt to shift into R (Reverse). The transaxle can be damaged if you do not. To shift into R (Reverse), depress the clutch, move the shift lever to neutral, wait three seconds, then shift to the R (Reverse) position.
- Exercise extreme caution when driving on a slippery surface. Be especially careful when braking, accelerating or shifting gears. On a slippery surface, an abrupt change in vehicle speed can cause the drive wheels to lose traction and the vehicle to go out of control.

⚠ WARNING

- **Always buckle-up! In a collision, an unbelted occupant is significantly more likely to be seriously injured or killed than a properly belted occupant.**
- **Avoid high speeds when cornering or turning.**

(Continued)

(Continued)

- **Do not make quick steering wheel movements, such as sharp lane changes or fast, sharp turns.**
- **The risk of rollover is greatly increased if you lose control of your vehicle at highway speeds.**
- **Loss of control often occurs if two or more wheels drop off the roadway and the driver oversteers to reenter the roadway.**
- **In the event your vehicle leaves the roadway, do not steer sharply. Instead, slow down before pulling back into the travel lanes.**
- **Never exceed posted speed limits.**

AUTOMATIC TRANSAXLE (IF EQUIPPED)

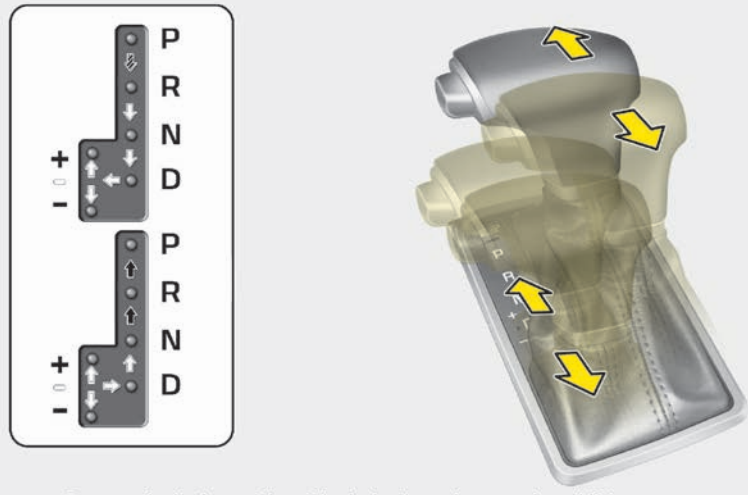

Depress the brake pedal and the lock release button when shifting.
(If the shift lock system is not equipped, it is not necessary to depress the brake pedal. However, it is recommended to depress the brake pedal to avoid inadvertent movement of the vehicle.)

Press the lock release button when shifting.

The shift lever can be shifted freely.

✻ The above illustration may defer depending on different options.

OQL055007C

Automatic transaxle operation

The automatic transaxle has 6 or 8 forward speeds and one reverse speed. The individual speeds are selected automatically, depending on the position of the shift lever.

✻ NOTICE

The first few shifts on a new vehicle, if the battery has been disconnected, may be somewhat abrupt. This is a normal condition, and the shifting sequence will adjust after shifts are cycled a few times by the TCM (Transaxle Control Module) or PCM (Powertrain Control Module).

For smooth operation, depress the brake pedal when shifting from N (Neutral) to a forward or reverse gear.

⚠ WARNING

■ Automatic transaxle (Continued)

(Continued)

- **Always check the surrounding areas near your vehicle for people, especially children, before shifting a vehicle into D (Drive) or R (Reverse).**
- **Before leaving the driver's seat, always make sure the shift lever is in the P (Park) position; then set the parking brake fully and shut the engine off. Unexpected and sudden vehicle movement can occur if these precautions are not followed in the order identified.**
- **Do not use the engine brake (shifting from a high gear to lower gear) rapidly on slippery roads. The vehicle may slip causing an accident.**

⚠ CAUTION

- **To avoid damage to your transaxle, do not accelerate the engine in R (Reverse) or any forward gear position with the brakes on.**

(Continued)

(Continued)

- **When stopped on an upgrade, do not hold the vehicle stationary with engine power. Use the service brake or the parking brake.**
- **Do not shift from N (Neutral) or P (Park) into D (Drive), or R (Reverse) when the engine is above idle speed.**

Transaxle ranges

The indicator lights in the instrument cluster displays the shift lever position when the ignition switch is in the ON position.

P (Park)

Always come to a complete stop before shifting into P (Park). This position locks the transaxle and prevents the front wheels from rotating.

⚠ WARNING

- **Shifting into P (Park) while the vehicle is in motion will cause the drive wheels to lock which will cause you to lose control of the vehicle.**
- **Do not use the P (Park) position in place of the parking brake. Always make sure the shift lever is latched in the P (Park) position and set the parking brake fully.**
- **Never leave a child unattended in a vehicle.**

⚠ CAUTION

The transaxle may be damaged if you shift into P (Park) while the vehicle is in motion.

R (Reverse)

Use this position to drive the vehicle backward.

⚠ CAUTION

Always come to a complete stop before shifting into or out of R (Reverse); you may damage the transaxle if you shift into R (Reverse) while the vehicle is in motion, except as explained in "Rocking the vehicle" on page 6-142.

N (Neutral)

The wheels and transaxle are not engaged. The vehicle will roll freely even on the slightest incline unless the parking brake or service brakes are applied.

⚠ WARNING

Do not drive with the shift lever in N (Neutral).
The engine brake will not work and lead to an accident.

- Parking in N (Neutral) gear

Follow below steps when parking and you want the vehicle to move when pushed.

1. After parking your vehicle, depress the brake pedal and move the shift lever to [P] with the ignition button in [ON] or while the engine is running.
2. If the parking brake is applied unlock the parking brake.
   - For EPB (Electronic Parking Brake) equipped vehicles, push the brake pedal with the ignition button in [ON] or while the engine is running to disengage the parking brake. If [AUTO HOLD] function is used while driving (If [AUTO HOLD] indicator is on in the cluster), press [AUTO HOLD] switch and [AUTO HOLD] function should be turn off.
3. While pressing the brake pedal, turn the ignition button [OFF].
   - For smart key equipped vehicles, the ignition switch can be moved to [OFF] only when the shift lever is in [P].
4. Change the gear shift lever to [N] (Neutral) while pressing the brake pedal and pushing [SHIFT LOCK RELEASE] button or inserting, pressing down a tool (e.g. flathead screw-driver) into the [SHIFT LOCK RELEASE] access hole at the same time. Then, the vehicle will move when external force is applied.

⚠ CAUTION

- **With the exception of parking in neutral gear, always park the vehicle in [P] (Park) for safety and engage the parking brake.**
- **Before parking in [N] (Neutral) gear, first make sure the parking ground is level and flat. Do not park in [N] gear on any slopes or gradients.**
  If parked and left in [N], the vehicle may move and cause serious damage and injury.
- **After the ignition switch has been turned off, the electronic parking brake cannot be disengaged.**

(Continued)

(Continued)

- **For EPB (Electronic Parking Brake) equipped vehicles with [AUTO HOLD] function used while driving, if the ignition button has been turned [OFF], the electronic parking brake will be engaged automatically. Therefore, [AUTO HOLD] function should be turned off before the ignition button is turned off.**

D (Drive)

This is the normal forward driving position. The transaxle will automatically shift through a 6-gear sequence, providing the best fuel economy and power.
For extra power when passing another vehicle or climbing grades, depress the accelerator pedal fully (more than 82%) until the kick down mechanism (if equipped) works with a clicking noise, at which time the transaxle will automatically downshift to the next lower gear.

✻ NOTICE

- Always come to a complete stop before shifting into D (Drive).
- A clicking noise heard from the kick down mechanism by depressing the accelerator pedal fully is a normal condition.

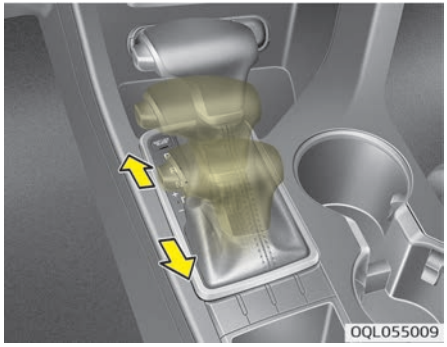

Manual mode

Whether the vehicle is stationary or in motion, manual mode is selected by pushing the shift lever from the D (Drive) position into the manual gate. To return to D (Drive) range operation, push the shift lever back into the main gate.
In manual mode, moving the shift lever backwards and forwards will allow you to make gearshifts rapidly.

Up (+):	Push the lever forward once to shift up one gear.
Down (-):	Pull the lever backwards once to shift down one gear.

✻ NOTICE

- In manual mode, the driver must execute upshifts in accordance with road conditions, taking care to keep the engine speed below the red zone.
- In manual mode, only the 6 or 8 forward gears can be selected. To reverse or park the vehicle, move the shift lever to the R (Reverse) or P (Park) position as required.
- In manual mode, downshifts are made automatically when the vehicle slows down. When the vehicle stops, 1st gear is automatically selected.
- In manual mode, when the engine rpm approaches the red zone shift points are varied to upshift automatically.
- To maintain the required levels of vehicle performance and safety, the system may not execute certain gearshifts when the shift lever is operated.

(Continued)

(Continued)

- When driving on a slippery road, push the shift lever forward into the +(up) position. This causes the transaxle to shift into the 2nd gear which is better for smooth driving on a slippery road. Push the shift lever to the -(down) side to shift back to the 1st gear.

Paddle shifter (if equipped)

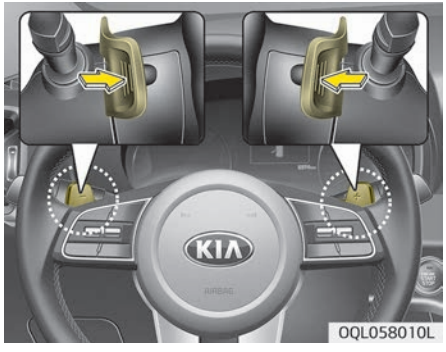

The paddle shifter is available when the shift lever is in the D position or the manual mode.

With the shift lever in the D position

The paddle shifter will operate when the vehicle speed is more than 10 km/h. Pull the [+] or [-] paddle shifter once to shift up or down one gear and the system changes from automatic mode to manual mode.
When the vehicle speed is lower than 10 km/h, if you depress the accelerator pedal for more than 5 seconds or if you shift the shift lever from D (Drive) to manual mode and shift it from manual mode to D (Drive) again, the system changes from manual mode to automatic mode.

With the shift lever in the manual mode

Pull the [+] or [-] paddle shifter once to shift up or down one gear.

✻ NOTICE

If you pull the [+] and [-] paddle shifters at the same time, you cannot shift the gear.

Shift lock system

For your safety, the automatic transaxle has a shift lock system which prevents shifting the transaxle from P (Park) into R (Reverse) unless the brake pedal is depressed.
To shift the transaxle from P (Park) into R (Reverse):

1. Depress and hold the brake pedal.
2. Start the engine or turn the ignition switch to the ON position.
3. Move the shift lever.

If the brake pedal is repeatedly depressed and released with the shift lever in the P (Park) position, a chattering noise & vibration near the shift lever may be heard. This is a normal condition.

⚠ WARNING

Always fully depress the brake pedal before and while shifting out of the P (Park) position into another position to avoid inadvertent motion of the vehicle which could injure persons in or around the vehicle.

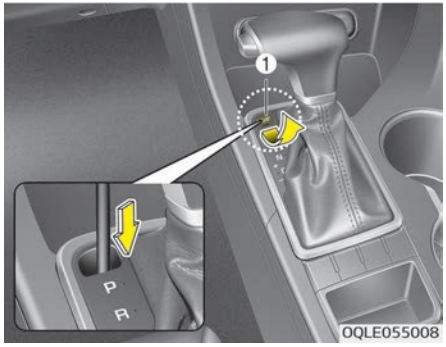

Shift-lock override

If the shift lever cannot be moved from the P (Park) position into R (Reverse) position with the brake pedal depressed, continue depressing the brake, then do the following:

1. Place the ignition switch in the LOCK/OFF position.
2. Apply the parking brake.
3. Carefully remove the cap (1) covering the shift-lock override access hole.
4. Insert a tool (e.g. flathead screwdriver) into the access hole and press down on the tool.
5. Move the shift lever.
6. Remove the tool from the shift-lock override access hole then install the cap.
7. Have the system inspected by a professional workshop. Kia recommends to visit an authorized Kia dealer/service partner.

Ignition key interlock system (if equipped)

The ignition key cannot be removed unless the shift lever is in the P (Park) position.

Good driving practices

- Never move the shift lever from P (Park) or N (Neutral) to any other position with the accelerator pedal depressed.
- Never move the shift lever into P (Park) when the vehicle is in motion.
- Be sure the vehicle is completely stopped before you attempt to shift into R (Reverse) or D (Drive).
- Never take the vehicle out of gear and coast down a hill. This may be extremely hazardous. Always leave the vehicle in gear when moving.

- Do not "ride" the brakes. This can cause them to overheat and malfunction. Instead, when you are driving down a long hill, slow down and shift to a lower gear. When you do this, engine braking will help slow down the vehicle.
- Slow down before shifting to a lower gear. Otherwise, the lower gear may not be engaged.
- Always use the parking brake. Do not depend on placing the transaxle in P (Park) to keep the vehicle from moving.
- Exercise extreme caution when driving on a slippery surface. Be especially careful when braking, accelerating or shifting gears. On a slippery surface, an abrupt change in vehicle speed can cause the drive wheels to lose traction and the vehicle to go out of control.
- Optimum vehicle performance and economy is obtained by smoothly depressing and releasing the accelerator pedal.

⚠ WARNING

- **Always buckle-up! In a collision, an unbelted occupant is significantly more likely to be seriously injured or killed than a properly belted occupant.**
- **Avoid high speeds when cornering or turning.**
- **Do not make quick steering wheel movements, such as sharp lane changes or fast, sharp turns.**
- **The risk of rollover is greatly increased if you lose control of your vehicle at highway speeds.**
- **Loss of control often occurs if two or more wheels drop off the roadway and the driver oversteers to reenter the roadway.**
- **In the event your vehicle leaves the roadway, do not steer sharply. Instead, slow down before pulling back into the travel lanes.**
- **Never exceed posted speed limits.**

⚠ WARNING

If your vehicle becomes stuck in snow, mud, sand, etc., then you may attempt to rock the vehicle free by moving it forward and backward. Do not attempt this procedure if people or objects are anywhere near the vehicle. During the rocking operation the vehicle may suddenly move forward of backward as it becomes unstuck, causing injury or damage to nearby people or objects.

Moving up a steep grade from a standing start

To move up a steep grade from a standing start, depress the brake pedal, shift the shift lever to D (Drive). Select the appropriate gear depending on load weight and steepness of the grade, and release the parking brake. Depress the accelerator gradually while releasing the service brakes.

When accelerating from a stop on a steep hill, the vehicle may have a tendency to roll backwards. Shifting the shift lever into 2 (Second Gear) will help prevent the vehicle from rolling backwards.

ALL WHEEL DRIVE (AWD) (IF EQUIPPED)

■ Type A

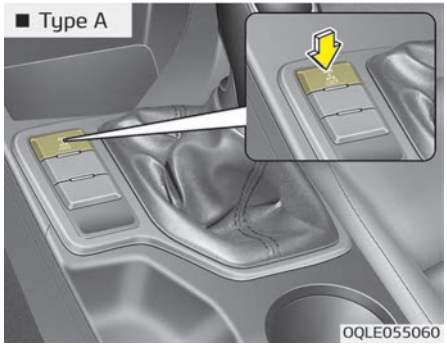

■ Type B

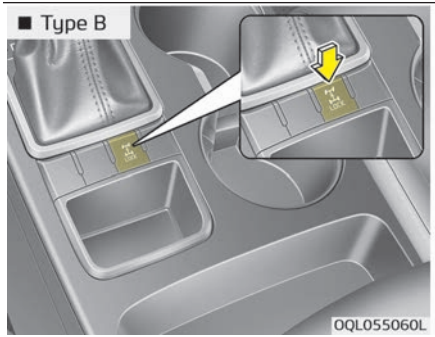

■ Type C

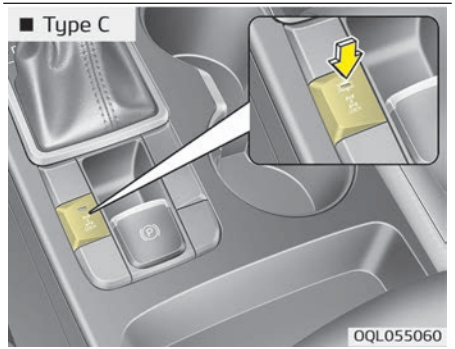

Engine power can be delivered to all front and rear wheels for maximum traction. AWD is useful when extra traction is required on road, such as, when driving on slippery, muddy, wet, or snow-covered roads. These vehicles are not designed for challenging off-road use. Occasional offroad use such as established unpaved roads and trails are OK. It is always important when traveling off highway that the driver carefully reduces the speed to a level that does not exceed the safe operating speed for those conditions. In general, off-road conditions provide less traction and braking effectiveness than normal road conditions.

- AWD: All Wheel Drive
- FWD: Front Wheel Drive

The driver must be especially alert to avoid driving on slopes which tilt the vehicle to either side.
These factors must be carefully considered when driving off-road. Keeping the vehicle in contact with the driving surface and under control in these conditions is always the driver's responsibility for the safety of him/herself and his or her passengers.

⚠ WARNING

■ Off road driving

This vehicle is designed primarily for on road use although it can operate effectively off road. However, it was not designed to drive in challenging off-road conditions. Driving in conditions that exceed the vehicle's intended design or the driver's experience level may result in severe injury or death.

⚠ WARNING

If the AWD system warning light (⚠) illuminates, this indicates that there is a malfunction in the AWD system. In this case, have the system checked by a professional workshop. Kia recommends to visit an authorized Kia dealer/service partner.

Tight corner brake effect

⚠ CAUTION

■ AWD

When turning sharply on a paved road at low speed while in all wheel drive, steering control will be difficult.

Tight corner brake effect is a unique characteristic of all wheel drive vehicles caused by the difference in tire rotation at the four wheels and the zero-degree alignment of the front wheels and suspension.
Sharp turns at low speeds should be carried out with caution.

All wheel drive (AWD) transfer mode selection

Transfer mode	Selection button	Indicator light	Description
AWD AUTO (AWD LOCK is deactivated)		 (Indicator light is not illuminated)	• AWD Auto is used when driving on roads in normal conditions, roads in urban areas, and on highways. • All wheels are in operation when a vehicle travels at a constant speed. Required tractions applying on front and rear wheels vary depending on road driving conditions and driving conditions, which will be automatically controlled by the computing system. • When the cluster's AWD Auto display mode is selected, the cluster displays the status of how four wheels' traction forces are distributed.

Transfer mode	Selection button	Indicator light	Description
AWD LOCK		 (Indicator light is illuminated)	• The main goal of AWD Lock mode is to allow a driver to maximize the vehicle's traction under extreme driving conditions such as unpaved off-road, sandy roads, and muddy roads. • AWD Lock mode is in operation only when a vehicle travels at 60 km/h or less. When traveling at 60 km/h or faster, the mode will switch to AWD Auto. • When AWD Lock mode illuminates, the cluster does not display the front/rear wheel traction force distribution status. • Press the AWD Lock mode switch again to switch back to AWD Auto.

✻ NOTICE

- Maintain AWD Auto mode when driving on roads in normal conditions.
- When driving under normal road conditions (especially when cornering) in AWD Lock mode, a driver may find minor mechanical vibration or noise, which is extremely normal phenomenon, not a malfunction. When AWD Lock mode is released, such noise or vibration will be immediately gone.

For safe all wheel drive operation

⚠ WARNING

■ All wheel drive

The conditions of on-road or off-road that demand all wheel drive mean all functions of your vehicle are exposed to extreme stress than under normal road conditions. Slow down and be ready for changes in the composition and traction of the surface under your tires. If you have any doubt about the safety of the conditions you are facing, stop and consider the best way to proceed. Do not exceed the ability of yourself or your vehicle to operate safely.

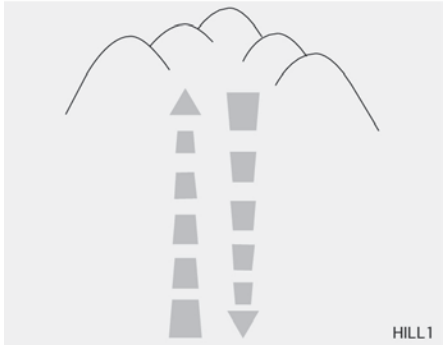

- Do not try to drive in deep standing water or mud since such conditions can stall your engine and clog your exhaust pipes. Do not drive down steep hills since it requires extreme skill to maintain control of the vehicle.



- When you are driving up or down hills drive as straight as possible. Use extreme caution in going up or down steep hills, since you may flip your vehicle over depending on the grade, terrain and water/mud conditions.

⚠ WARNING

■ Hills

Driving across the contour of steep hills can be extremely dangerous. This danger can come from slight changes in the wheel angle which can destabilize the vehicle or, even if the vehicle is maintaining stability

(Continued)

(Continued)

under power, it can lose that stability if the vehicle stops its forward motion. Your vehicle may roll over without warning and without time for you to correct a mistake that could cause serious injury or death.

- You must consciously take the effort to learn how to corner in a AWD vehicle. Do not rely on your experience in conventional FWD vehicles in choosing safe cornering speed in AWD mode. For starters, you must drive more slowly in AWD.



- Drive carefully off-road because your vehicle may be damaged by rocks or roots of trees. Become familiar with the off-road conditions where you are going to drive before you begin driving.

⚠ WARNING

■ AWD

Reduce speed when you turn corners. The center of gravity of AWD vehicles is higher than that of conventional FWD vehicles, making them more likely to roll over when you turn corners too fast.

⚠ WARNING

■ Steering wheel

Do not grab the inside of the steering wheel when you are driving off-road. You may hurt your arm by a sudden steering maneuver or from steering wheel rebound due to impact with objects on the ground. You could lose control of the steering wheel.

- Always hold the steering wheel firmly when you are driving off-road.
- Make sure all passengers are wearing seat belts.

⚠ WARNING

■ Wind danger

If you are driving in heavy wind, the vehicle's higher center of gravity decreases your steering control capacity and requires you to drive more slowly.

- If you need to drive in the water, stop your vehicle, set your transfer to the AWD LOCK mode and drive at less than 8 km/h (5 mph).

⚠ WARNING

■ Driving through water

Drive slowly. If you are driving too fast in water, the water can get into the engine compartment and wet the ignition system, causing your vehicle to suddenly stop. If this happens and your vehicle is in a tilted position, your vehicle may roll over.

✻ NOTICE

- Do not drive in water if the level is higher than the bottom of the vehicle.
- Check your brake condition once you are out of mud or water. Press the brake pedal several times as you move slowly until you feel normal braking forces return.
- Shorten your scheduled maintenance interval if you drive in off-road conditions such as sand, mud or water (see "Maintenance under severe usage conditions - for gasoline engine [except Europe (including Russia)]" on page 8-19). Always wash your vehicle thoroughly after off-road use, especially cleaning the bottom of the vehicle.

(Continued)

(Continued)

- Since the driving torque is always applied to the 4 wheels the performance of the AWD vehicle is greatly affected by the condition of the tires. Be sure to equip the vehicle with four tires of the same size and type.
- A full time all wheel drive vehicle cannot be towed by an ordinary tow truck. Make sure that the vehicle is placed on a flat bed truck for moving.

⚠ WARNING

■ AWD Driving

- **Avoid high cornering speed.**
- **Do not make quick steering wheel movements, such as sharp lane changes or fast, sharp turns.**
- **The risk of rollover is greatly increased if you lose control of your vehicle at high speed.**

(Continued)

(Continued)

- **In a collision, an unbelted person is significantly more likely to die compared to a person wearing a seat belt.**
- **Loss of control often occurs if two or more wheels drop off the roadway and the driver over-steers to re-enter the roadway. In the event your vehicle leaves the roadway, do not steer sharply. Instead, slow down before pulling back into the travel lanes.**

⚠ CAUTION

■ Mud or snow

If one of the front or rear wheels begins to spin in mud, snow, etc. the vehicle can sometimes be driven out by depressing the accelerator pedal further; however avoid running the engine continuously at high rpm because doing so could damage the AWD system.

Reducing the risk of a rollover

This multi-purpose passenger vehicle is defined as a Sports Utility Vehicle (SUV). SUV's have higher ground clearance and a narrower track to make them capable of performing in a wide variety of off-road applications. Specific design characteristics give them a higher center of gravity than ordinary vehicles. An advantage of the higher ground clearance is a better view of the road, which allows you to anticipate problems. They are not designed for cornering at the same speeds as conventional passenger vehicles, any more than low-slung sports vehicles are designed to perform satisfactorily in off-road conditions. Due to this risk, driver and passengers are strongly recommended to buckle their seat belts. In a rollover crash, an unbelted person is more likely to die than a person wearing a seat belt. There are steps that a driver can make to reduce the risk of a rollover. If at all possible, avoid sharp turns or abrupt maneuvers, do not load your roof rack with heavy cargo, and never modify your vehicle in any way.

⚠ WARNING

■ Rollover

As with other Sports Utility Vehicle (SUV), failure to operate this vehicle correctly may result in loss of control, an accident or vehicle rollover.

- **Utility vehicles have a significantly higher rollover rate than other types of vehicles.**
- **Specific design characteristics (higher ground clearance, narrower track, etc.) give this vehicle a higher center of gravity than ordinary vehicles.**
- **A SUV is not designed for cornering at the same speeds as conventional vehicles.**
- **Avoid sharp turns or abrupt maneuvers.**
- **In a rollover crash, an unbelted person is significantly more likely to die than a person wearing a seat belt. Make sure everyone in the vehicle is properly buckled up.**

⚠ WARNING

Your vehicle is equipped with tires designed to provide safe ride and handling capability. Do not use a size and type of tire and wheel that is different from the one that is originally installed on your vehicle. It can affect the safety and performance of your vehicle, which could lead to steering failure or rollover and serious injury. When replacing the tires, be sure to equip all four tires with the tire and wheel of the same size, type, tread, brand and load-carrying capacity. If you nevertheless decide to equip your vehicle with any tire/wheel combination not recommended by Kia for off road driving, you should not use these tires for highway driving.

⚠ WARNING

■ Jacked vehicle

While the full-time AWD vehicle is being raised on a jack, never start

(Continued)

(Continued)

the engine or cause the tires to rotate.
There is the danger that rotating tires touching the ground could cause the vehicle to go off the jack and to jump forward.

- Full-time AWD vehicles must be tested on a special four wheel chassis dynamometer.

✻ NOTICE

Never engage the parking brake while performing these tests.

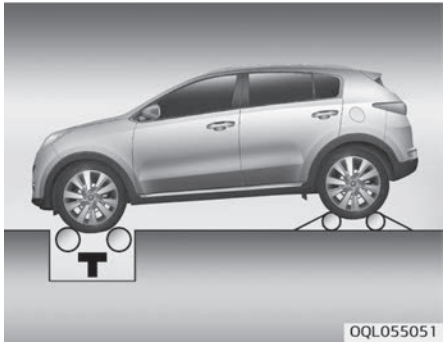

- A full-time AWD vehicle should not be tested on a FWD roll tester. If a FWD roll tester must be used, perform the following:
  1. Check the tire pressures recommended for your vehicle.
  2. Place the front wheels on the roll tester (1) for a speedometer test as shown in the illustration.
  3. Release the parking brake.
  4. Place the rear wheels on the temporary free roller (2) as shown in the illustration.

⚠ WARNING

■ Dynamometer testing

Keep away from the front of the vehicle while the vehicle is in gear on the dynamometer. This is very dangerous as the vehicle can jump forward and cause serious injury or death.

⚠ CAUTION

- **When lifting up the vehicle, do not operate front and rear wheel separately. All four wheels should be operated.**
- **If you need to operate the front wheel and rear wheel when lifting up the vehicle, you should release the parking brake.**

BRAKE SYSTEM

Power brakes

Your vehicle has power-assisted brakes that adjust automatically through normal usage.

In the event that the power-assisted brakes lose power because of a stalled engine or some other reason, you can still stop your vehicle by applying greater force to the brake pedal than you normally would. The stopping distance, however, will be longer.

When the engine is not running, the reserve brake power is partially depleted each time the brake pedal is applied. Do not pump the brake pedal when the power assist has been interrupted.

Pump the brake pedal only when necessary to maintain steering control on slippery surfaces.

⚠ WARNING

■ Brakes

(Continued)

(Continued)

- **Do not drive with your foot resting on the brake pedal. This will create abnormal high brake temperatures, excessive brake lining and pad wear, and increased stopping distances.**
- **When descending a long or steep hill, shift to a lower gear and avoid continuous application of the brakes. Continuous brake application will cause the brakes to overheat and could result in a temporary loss of braking performance.**
- **Wet brakes may impair the vehicle's ability to safely slow down; the vehicle may also pull to one side when the brakes are applied. Applying the brakes lightly will indicate whether they have been affected in this way.**
  Always test your brakes in this fashion after driving through deep water. To dry the brakes, apply them lightly while maintaining a safe forward speed until brake performance returns to normal.

(Continued)

(Continued)

- **Always confirm the position of the brake and accelerator pedal before driving. If you don't check the position of the accelerator and brake pedal before driving, you may depress the accelerator instead of the brake pedal. It may cause a serious accident.**

In the event of brake failure

If service brakes fail to operate while the vehicle is in motion, you can make an emergency stop with the parking brake. The stopping distance, however, will be much greater than normal.

⚠ WARNING

■ Parking brake

Applying the parking brake while the vehicle is moving at normal speeds can cause a sudden loss of control of the vehicle. If you must use the parking brake to stop the vehicle, use great caution in applying the brake.

⚠ CAUTION

Do not operate the parking brake while the vehicle is moving except in an emergency situation. It could damage the vehicle system and may endanger driving safety.

Disc brakes wear indicator

When your brake pads are worn and new pads are required, you will hear a high-pitched warning sound from your front brakes or rear brakes (if equipped). You may hear this sound come and go or it may occur whenever you depress the brake pedal.
Please remember that some driving conditions or climates may cause a brake squeal when you first apply (or lightly apply) the brakes. This is normal and does not indicate a problem with your brakes.

⚠ CAUTION

- **To avoid costly brake repairs, do not continue to drive with worn brake pads.**

(Continued)

(Continued)

- **Always replace the front or rear brake pads as pairs.**

⚠ WARNING

■ Brake wear

This brake wear warning sound means your vehicle needs service. If you ignore this audible warning, you will eventually lose braking performance, which could lead to a serious accident.

Parking brake

Applying the parking brake

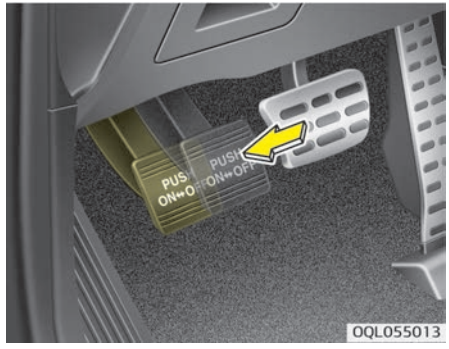

Foot type

To engage the parking brake, first apply the foot brake and then depress the parking brake pedal down as far as possible.

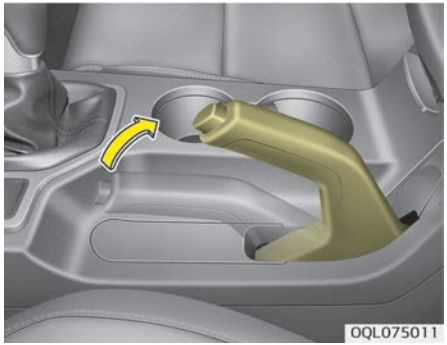

Hand type

To engage the parking brake, first apply the foot brake and then pull up the parking brake lever as far as possible.
In addition it is recommended that when parking the vehicle on an incline, the shift lever should be in a low gear on manual transaxle vehicles or in the P (Park) position on automatic transaxle vehicles.

⚠ CAUTION

- **Driving with the parking brake applied will cause excessive brake pad (or lining) and brake rotor wear.**
- **Do not operate the parking brake while the vehicle is moving except in an emergency situation. It could damage the vehicle system and may endanger driving safety.**

Releasing the parking brake



Foot type

To release the parking brake, depress the parking brake pedal a second time while applying the foot brake. The pedal will automatically extend to the fully released position.

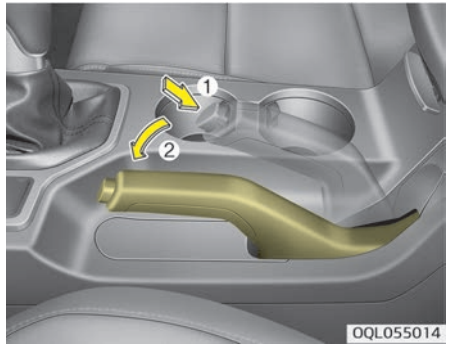

Hand type

To release the parking brake, first apply the foot brake and pull up the parking brake lever slightly. Secondly depress the release button (1) and lower the parking brake lever (2) while holding the button.

If the parking brake does not release or does not release all the way, have the system checked by a professional workshop. Kia recommends to visit an authorized Kia dealer/service partner.

⚠ WARNING

- **To prevent unintentional movement when stopped and leaving the vehicle, do not use the shift lever instead of the parking brake. Set the parking brake AND make sure the shift lever is securely positioned in 1st (First) gear or R (Reverse) for manual transaxle equipped vehicles and in P (Park) for automatic transaxle equipped vehicles.**
- **Never allow anyone who is unfamiliar with the vehicle to touch the parking brake. If the parking brake is released unintentionally, serious injury may occur.**
- **All vehicles should always have the parking brake fully engaged when parking to avoid inadvertent movement of the vehicle which can injure occupants or pedestrians.**



Check the brake warning light by turning the ignition switch ON (do not start the engine). This light will be illuminated when the parking brake is applied with the ignition switch in the START or ON position.
Before driving, be sure the parking brake is fully released and the brake warning light is off.
If the brake warning light remains on after the parking brake is released while the engine is running, there may be a malfunction in the brake system. Immediate attention is necessary.

If at all possible, cease driving the vehicle immediately. If that is not possible, use extreme caution while operating the vehicle and only continue to drive the vehicle until you can reach a safe location or repair shop.

Electronic parking brake (EPB) (if equipped)

Applying the parking brake

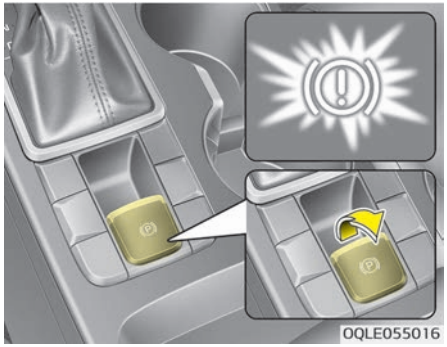

To apply the EPB (electronic parking brake):

1. Depress the brake pedal.
2. Pull up the EPB switch.

Make sure the warning light comes on.

Also, the EPB is applied automatically if the Auto Hold button is on when the engine is turned off. However, if you keep pressing the EPB switch till the engine is turned off, the EPB will not be applied.

✻ NOTICE

On a steep incline or when pulling a trailer if the vehicle does not stand still, do as follows:

1. Apply the EPB.
2. Pull up the EPB switch for more than 3 seconds.

⚠ CAUTION

Do not operate the parking brake while the vehicle is moving except in an emergency situation. It could damage the vehicle system and endanger driving safety.

Releasing the parking brake

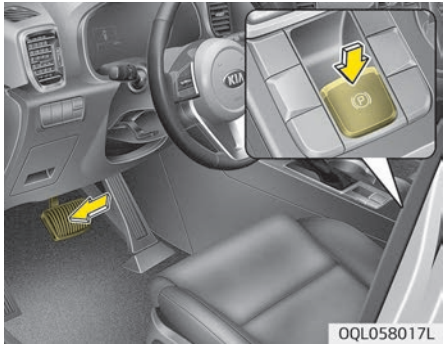

To release the EPB (electronic parking brake), press the EPB switch in the following condition:

- Have the ignition switch or engine start/stop button in the ON position.
- Depress the brake pedal.

Make sure the brake warning light goes off.

To release EPB (electronic parking brake) automatically:

- Shift lever in P (Park)
  With the engine running depress the brake pedal and shift out of P (Park) to R (Reverse) or D (Drive).
- Shift lever in N (Neutral)
  With the engine running depress the brake pedal and shift out of N (Neutral) to R (Reverse) or D (Drive).
- Manual transaxle vehicle
  1. Start the engine.
  2. Fasten the driver's seat belt.
  3. Close the driver's door, engine hood and tailgate.
  4. Depress the clutch pedal with the gear engaged.
  5. Depress the accelerator pedal while releasing the clutch pedal.
- Automatic transaxle vehicle
  1. Start the engine.
  2. Fasten the driver's seat belt.
  3. Close the driver's door, engine hood and tailgate.
  4. Depress the accelerator pedal while the shift lever is in R (Rear), D (Drive) or manual mode.

Make sure the brake warning light goes off.

✻ NOTICE

- For your safety, you can engage the EPB even though the ignition switch or engine stop/start button is in the OFF position, but you cannot release it.
- For your safety, depress the brake pedal and release the parking brake manually with the EPB switch when you drive downhill or when backing up the vehicle.

✻ NOTICE

■ Manual transaxle

A vehicle towing a trailer on a hill or on an incline may slightly roll backwards when starting the vehicle. To prevent the situation follow the below instructions.

1. Depress the clutch pedal and select a gear.

(Continued)

(Continued)

2. Keep pulling up the EPB switch.
3. Depress the accelerator pedal and slowly release the clutch pedal.
4. If the vehicle starts off with enough driving power release the EPB switch.

Do not follow the above procedure when driving on a flat level ground. The vehicle may suddenly move forward.

⚠ CAUTION

- **If the parking brake warning light is still on even though the EPB has been released, have the system checked by a professional workshop. Kia recommends to visit an authorized Kia dealer/ service partner.**
- **Do not drive your vehicle with the EPB applied. It may cause excessive brake pad and brake rotor wear.**

EPB (electronic parking brake) may be automatically applied when:

- The EPB is overheated
- Requested by other systems

✻ NOTICE

If the driver turns the engine off by mistake while Auto Hold is operating, EPB will be automatically applied (vehicles equipped with Auto Hold).

System warning



OJF058249LB

- If you try to drive off depressing the accelerator pedal with the EPB applied, but doesn't release automatically, a warning will sound and a message will appear.
- If the driver's seat belt is not fastened and the engine hood or tailgate is opened, a warning will sound and a message will appear.
- If there is a problem with the vehicle, a warning may sound and a message may appear.

If the above situation occurs, depress the brake pedal and release EPB by pressing the EPB switch.

⚠ WARNING

- **To prevent unintentional movement when stopped and leaving the vehicle, do not use the shift lever in place of the parking brake. Set the parking brake and make sure the shift lever is securely positioned in P (Park).**

(Continued)

(Continued)

- **Never allow anyone who is unfamiliar with the vehicle to touch the parking brake. If the parking brake is released unintentionally, serious injury may occur.**
- **All vehicles should always have the parking brake fully engaged when parking to avoid inadvertent movement of the car which can injure occupants or pedestrians.**

⚠ CAUTION

- **A click sound may be heard while operating or releasing the EPB, but these conditions are normal and indicate that the EPB is functioning properly.**
- **When leaving your keys with a parking lot attendant or valet, make sure to inform him/her how to operate the EPB.**
- **The EPB may malfunction if you drive with the EPB applied.**
- **When you automatically release EPB by depressing the accelerator pedal, depress it slowly.**

System warning

■ Type A

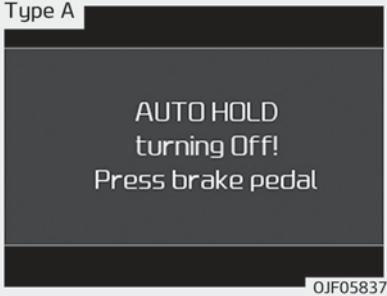

OJF058374L

■ Type B

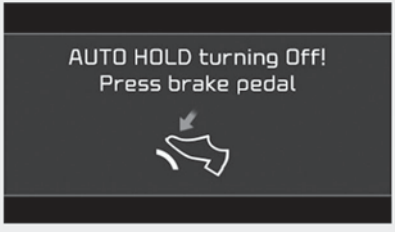

OJF058375L

When the conversion from Auto Hold to EPB is not working properly a warning will sound and a message will appear.

⚠ CAUTION

Depress the brake pedal when the above message appears for the Auto Hold and EPB may not activate.

System warning

■ Type A

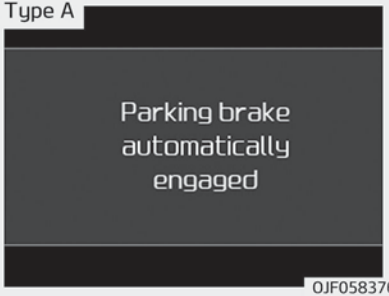

■ Type B

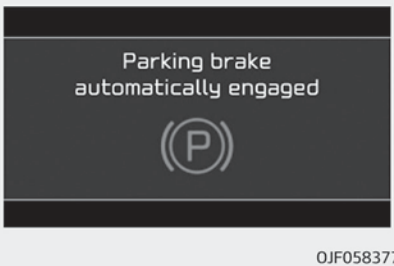

If the EPB is applied while Auto Hold is activated because of ESC (Electronic Stability Control) signal, a warning will sound and a message will appear.

EPB malfunction indicator (if equipped)

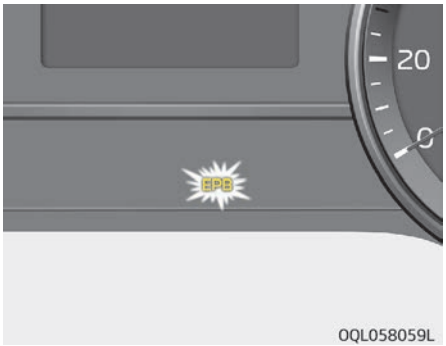

This warning light illuminates if the engine start/stop button is changed to the ON position and goes off in approximately 3 seconds if the system is operation normally.
If the EPB malfunction indicator remains on, comes on while driving, or does not come on when the ignition switch or the engine start/stop button is changed to the ON position, this indicates that the EPB may have malfunctioned.

If this occurs, have the system checked by a professional workshop. Kia recommends to visit an authorized Kia dealer/service partner.
The EPB malfunction indicator may illuminate when the ESC indicator comes on to indicate that the ESC is not working properly, but it does not indicate a malfunction of the EPB.

⚠ CAUTION

- **The EPB warning light may illuminate if the EPB switch operates abnormally. Shut the engine off and turn it on again after a few minutes. The warning light will go off and the EPB switch will operate normally. However, if the EPB warning light is still on, have the system checked by a professional workshop.**
  Kia recommends to visit an authorized Kia dealer/service partner.
- **If the parking brake warning light does not illuminate or blinks even though the EPB switch was pulled up, the EPB is not applied.**

(Continued)

(Continued)

- **If the parking brake warning light blinks when the EPB warning light is on, press the switch, then pull it up. Once more press it back to its original position and pull it back up. If the EPB warning does not go off, have the system checked by a professional workshop.**
  Kia recommends to visit an authorized Kia dealer/service partner.

Emergency braking

If there is a problem with the brake pedal while driving, emergency braking is possible by pulling up and holding the EPB switch. Braking is possible only while you are holding the EPB switch.

⚠ WARNING

Do not operate the parking brake while the vehicle is moving except in an emergency situation.

✻ NOTICE

During emergency braking by the EPB, the parking brake warning light will illuminate to indicate that the system is operating.

⚠ CAUTION

If you continuously notice a noise or burning smell when the EPB is used for emergency braking, have the system checked by a professional workshop.
Kia recommends to visit an authorized Kia dealer/service partner.

When the EPB (electronic parking brake) does not release

If the EPB does not release normally, load the vehicle on a flatbed tow truck and have the system checked by a professional workshop. Kia recommends to visit an authorized Kia dealer/service partner.

AUTO HOLD (if equipped)

The Auto Hold maintains the vehicle in a standstill even though the brake pedal is not depressed after the driver brings the vehicle to a complete stop by depressing the brake pedal.

Set up

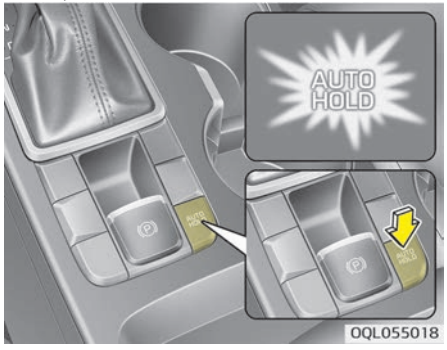

1. With the driver's door, engine hood closed, fasten the driver's seat belt or depress the brake pedal and then press the Auto Hold button. The white AUTO HOLD indicator will come on and the system will be in the standby position.



2. When you stop the vehicle completely by depressing the brake pedal, the AUTO HOLD indicator changes from white to green.
3. The vehicle will remain stationary even if you release the brake pedal.
4. If EPB is applied, Auto Hold will be released.

Leaving

If you press the accelerator pedal with the shift lever in D (Drive) or manual mode, the Auto Hold will be released automatically and the vehicle will start to move. The indicator changes from green to white.

⚠ WARNING

When driving off from Auto Hold by depressing the accelerator pedal, always check the surrounding area near your vehicle.
Slowly depress the accelerator pedal for a smooth launch.

Cancel

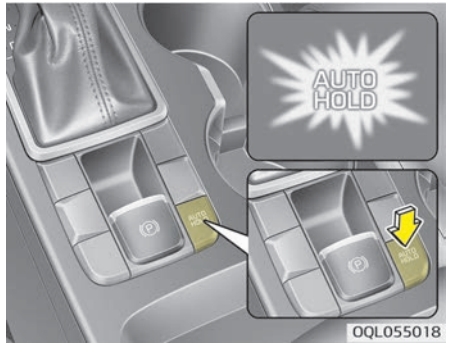

To cancel the Auto Hold operation, press the Auto Hold switch. The AUTO HOLD indicator will go out.

To cancel the Auto Hold operation when the vehicle is at a standstill, press the Auto Hold switch while depressing the brake pedal.

✻ NOTICE

- The Auto Hold does not operate when:
  - The driver's seat belt is unfastened and driver's door is opened.
  - The engine hood is opened.
  - The shift lever is in P (Park) or R (Reverse).
  - The EPB is applied.
- For your safety, the Auto Hold automatically switches to EPB in such cases:
  - The driver's seat belt is unfastened and driver's door is opened.
  - The engine hood is opened.
  - The vehicle is in a standstill for more than 10 minutes.

(Continued)

(Continued)

  - The vehicle is standing on a steep slope.
  - The vehicle moved several times.

  In these cases, the brake warning light comes on, the AUTO HOLD indicator changes from green to white, and a warning sound and a message will appear to inform you that EPB has been automatically engaged. Before driving off again, press foot brake pedal, check the surrounding area near your vehicle and release parking brake manually with the EPB switch.
- If the AUTO HOLD indicator lights up yellow, the Auto Hold is not working properly. In this case, have your vehicle inspected by a professional workshop. Kia recommends to contact an authorized Kia dealer/service partner.
- While operating Auto Hold, you may hear mechanical noise. However, it is normal operation noise.

⚠ WARNING

- **Press the accelerator pedal slowly when you start the vehicle.**
- **For your safety, cancel the Auto Hold when you drive downhill or back up the vehicle or park the vehicle.**

⚠ CAUTION

If there is a malfunction with the driver's door, engine hood open detection system, the Auto Hold may not work properly.
In this case, have your vehicle inspected by a professional workshop. Kia recommends to contact an authorized Kia dealer/service partner.

AUTO HOLD conditions not met. Close door, hood, and fasten seatbelt



When you press the [AUTO HOLD] switch, if the driver's door, engine hood are not closed or the driver's seat belt is unfastened, a warning will sound and a message will appear on the LCD display. At this moment, press the [AUTO HOLD] button after closing the driver's door, engine hood and fastening the seat belt.

Anti-lock brake system (ABS)

⚠ WARNING

ABS (or ESC) will not prevent accidents due to improper or dangerous driving maneuvers. Even though vehicle control is improved during emergency braking, always maintain a safe distance between you and objects ahead. Vehicle speeds should always be reduced during extreme road conditions.
The braking distance for vehicle equipped with an anti-lock braking system (or Electronic Stability Control) may be longer than for those without it in the following road conditions.
During these conditions the vehicle should be driven at reduced speeds:

- **Rough, gravel or snow-covered roads.**
- **With tire chains installed.**
- **On roads where the road surface is pitted or has different surface height.**

(Continued)

(Continued)

The safety features of an ABS (or ESC) equipped vehicle should not be tested by high speed driving or cornering. This could endanger the safety of yourself or others.

The ABS continuously senses the speed of the wheels. If the wheels are going to lock, the ABS system repeatedly modulates the hydraulic brake pressure to the wheels.
When you apply your brakes under conditions which may lock the wheels, you may hear a "tik-tik" sound from the brakes, or feel a corresponding sensation in the brake pedal. This is normal and it means your ABS is active.
In order to obtain the maximum benefit from your ABS in an emergency situation, do not attempt to modulate your brake pressure and do not try to pump your brakes. Press your brake pedal as hard as possible or as hard as the situation warrants and allow the ABS to control the force being delivered to the brakes.

✻ NOTICE

A click sound may be heard in the engine compartment when the vehicle begins to move after the engine is started. These conditions are normal and indicate that the anti-lock brake system is functioning properly.

- Even with the anti-lock brake system, your vehicle still requires sufficient stopping distance. Always maintain a safe distance from the vehicle in front of you.
- Always slow down when cornering. The anti-lock brake system cannot prevent accidents resulting from excessive speeds.
- On loose or uneven road surfaces, operation of the anti-lock brake system may result in a longer stopping distance than for vehicles equipped with a conventional brake system.



W-78

⚠ CAUTION

- **If the ABS warning light is on and stays on, you may have a problem with the ABS. In this case, however, your regular brakes will work normally.**

(Continued)

(Continued)

- **The ABS warning light will stay on for approximately 3 seconds after the ignition switch is ON. During that time, the ABS will go through self-diagnosis and the light will go off if everything is normal. If the light stays on, you may have a problem with your ABS. In this case, have your vehicle inspected by a professional workshop. Kia recommends to contact an authorized Kia dealer/service partner.**

⚠ CAUTION

- **When you drive on a road having poor traction, such as an icy road, and operate your brakes continuously, the ABS will be active continuously and the ABS warning light may illuminate. Pull your vehicle over to a safe place and stop the engine.**

(Continued)

(Continued)

- **Restart the engine. If the ABS warning light is off, then your ABS system is normal. Otherwise, you may have a problem with the ABS. In this case, have your vehicle inspected by a professional workshop. Kia recommends to contact an authorized Kia dealer/service partner.**

✻ NOTICE

When you jump start your vehicle because of a drained battery, the engine may not run as smoothly and the ABS warning light may turn on at the same time. This happens because of the low battery voltage. It does not mean your ABS is malfunctioning.

- Do not pump your brakes!
- Have the battery recharged before driving the vehicle.

Electronic stability control (ESC) (if equipped)

The Electronic Stability Control (ESC) system is designed to stabilize the vehicle during cornering maneuvers. ESC checks where you are steering and where the vehicle is actually going. ESC applies the brakes at individual wheels and intervenes with engine management system to stabilize the vehicle.

⚠ WARNING

Never drive too fast for the road conditions or too quickly when cornering. Electronic stability control (ESC) will not prevent accidents. Excessive speed in turns, abrupt maneuvers and hydroplaning on wet surfaces can still result in serious accidents. Only a safe and attentive driver can prevent accidents by avoiding maneuvers that cause the vehicle to lose traction. Even with ESC installed, always follow all the normal precautions for driving - including driving at safe speeds for the conditions.

The Electronic stability control (ESC) system is an electronic system designed to help the driver maintain vehicle control under adverse conditions. It is not a substitute for safe driving practices. Factors including speed, road conditions and driver steering input can all affect whether ESC will be effective in preventing a loss of control. It is still your responsibility to drive and corner at reasonable speeds and to leave a sufficient margin of safety.
When you apply your brakes under conditions which may lock the wheels, you may hear a "tik-tik" sound from the brakes, or feel a corresponding sensation in the brake pedal. This is normal and it means your ESC is active.

✻ NOTICE

A click sound may be heard in the engine compartment when the vehicle begins to move after the engine is started. These conditions are normal and indicate that the Electronic stability control (ESC) System is functioning properly.

ESC operation

ESC ON condition

-

- When the ignition switch is turned ON, ESC and ESC OFF indicator lights illuminate for approximately 3 seconds, then ESC is turned on.
- Select the 'User Settings ➡ Driver Assistance ➡ ESC ➡ ESC OFF/ ESC OFF(TCS OFF)' ESC OFF indicator will illuminate. Select the ESC ON, ESC OFF indicator light will go off.
- When starting the engine, you may hear a slight ticking sound. This is the ESC performing an automatic system self-check and does not indicate a problem.

When operating

When the ESC is in operation, ESC indicator light blinks.

- When the Electronic Stability Control is operating properly, you can feel a slight pulsation in the vehicle. This is only the effect of brake control and indicates nothing unusual.
- When moving out of the mud or slippery road, the engine rpm (revolution per minute) may not increase even if you press the accelerator pedal deeply. This is to maintain the stability and traction of the vehicle and does not indicate a problem.

ESC operation off

ESC OFF state

OFF

This car has 2 kinds of ESC off states.
If the engine stops when ESC is off, ESC remains off. Upon restarting the engine, the ESC will automatically turn on again.



- **ESC off state 1**
  To cancel ESC operation, Select the ECS OFF in the user settings (ESC OFF indicator light (ESC OFF) illuminates). At this state, the engine control function does not operate. It means the traction control function

does not operate. Brake control function only operates.

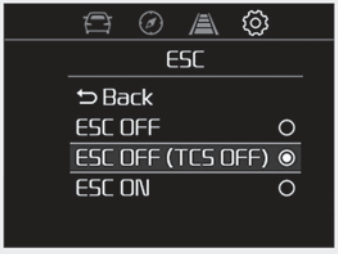

OQL058252L

- ESC off state 2
  To cancel ESC operation, Select the ECS OFF (TCS OFF) in the user settings. ESC OFF indicator light (ESC OFF) illuminates. At this state, the engine control function and brake control function do not operate. It means the car stability control function does not operate any more.

Indicator light

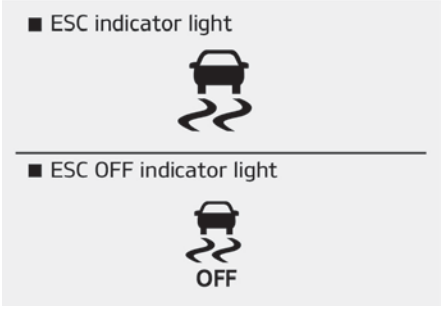

When ignition switch is turned to ON, the indicator light illuminates, then goes off if the ESC system is operating normally.
The ESC indicator light blinks whenever ESC is operating or illuminates when ESC fails to operate.
The ESC OFF indicator light comes on when select the ESC OFF/ ESC OFF (TCS OFF) in the User Settings.

⚠ CAUTION

Driving with varying tire or wheel sizes may cause the ESC system to
(Continued)

(Continued)

malfunction. When replacing tires, make sure they are the same size as your original tires.

⚠ WARNING

The Electronic Stability Control system is only a driving aid; use precautions for safe driving by slowing down on curved, snowy, or icy roads. Drive slowly and don't attempt to accelerate whenever the ESC indicator light is blinking, or when the road surface is slippery.

ESC OFF usage

When driving

- ESC should be turned on for daily driving whenever possible.
- To turn ESC off while driving, select the ESC OFF/ ESC OFF (TCS OFF) in the user settings while driving on a flat road surface.

⚠ WARNING

Never select the ESC OFF/ ESC OFF (TCS OFF) in the User settings while ESC is operating (ESC indicator light blinks).

✻ NOTICE

- When operating the vehicle on a dynamometer, ensure that select the 'User Settings ➡ Driver Assistance ➡ ESC OFF/ ESC OFF (TCS OFF)' (ESC OFF light illuminated). If the ESC is left on, it may prevent the vehicle speed from increasing, and result in false diagnosis.
- Turning the ESC off does not affect ABS or brake system operation.

Vehicle stability management (VSM) (if equipped)

This system provides further enhancements to vehicle stability and steering responses when a vehicle is driving on a slippery road or a vehicle detected changes in coefficient of friction between right wheels and left wheels when braking.

VSM operation

When the VSM is operating:

- ESC (Electronic Stability Control) (🚘) light will blink.
- The steering wheel may be controlled.

When the vehicle stability management is operating properly, you can feel a slight pulsation in the vehicle. This is only the effect of brake control and indicates nothing unusual.

The VSM does not operate when:

- Driving on bank road such as gradient or incline
- Driving rearward
- ESC OFF indicator light (🚘) remains on the instrument cluster
- EPS (Electronic Power Steering) indicator light remains on the instrument cluster

VSM operation off

If you select the 'User Settings ➡ Driver Assistance ➡ ESC OFF/ ESC OFF (TCS OFF)' , the VSM will also cancel and the ESC OFF indicator light (🚘) illuminates.
To turn on the VSM, select the 'User Settings ➡ Driver Assistance ➡ ESC ON' . The ESC OFF indicator light goes out.

Malfunction indicator

The VSM can be deactivated even if you don't cancel the VSM operation by select the ESC OFF/ ESC OFF (TCS OFF) in the User Settings. It indicates that a malfunction has been detected somewhere in the EPS (Electronic Power Steering) system or VSM system. If the ESC indicator light (🚘) or EPS warning light remains on, have the system checked by a professional workshop. Kia recommends to visit an authorized Kia dealer/service partner.

✻ NOTICE

- The VSM is designed to function above approximately 22 km/h (13 mph) on curves.
- The VSM is designed to function above approximately 10 km/h (6 mph) when a vehicle is braking on a split-mu road. The split-mu road is made of surfaces which have different friction forces.

⚠ WARNING

- **The Vehicle Stability Management system is not a substitute for safe driving practices but a supplementary function only. It is the responsibility of the driver to always check the speed and the distance to the vehicle ahead. Always hold the steering wheel firmly while driving.**

(Continued)

(Continued)

- **Your vehicle is designed to activate according to the driver's intention, even with the VSM installed. Always follow all the normal precautions for driving at safe speeds for the conditions – including driving in inclement weather and on a slippery road.**
- **Driving with varying tire or wheel sizes may cause the VSM system to malfunction. When replacing tires, make sure they are the same size as your original tires.**

Hill-start assist control (HAC) (if equipped)

A vehicle has the tendency to slip back on a steep hill when it starts to go after stopping. The Hill-start Assist Control (HAC) prevents the vehicle from slipping back by operating the brakes automatically for about 1~2 seconds. The brakes are released when the accelerator pedal is depressed or after about 1~2 seconds.

⚠ WARNING

The HAC is activated only for about 1~2 seconds, so when the vehicle is starting off always depress the accelerator pedal.

✻ NOTICE

- The HAC does not operate when the transaxle shift lever is in the P (Park) or N (Neutral) position.
- The HAC activates even though the ESC is off but it does not activate when the ESC has malfunctioned.

Trailer stability assist (TSA) (if equipped)

Trailer stability assist is operated as vehicle stability control system. Trailer stability assist system has an effort to stabilize the vehicle and trailer when the trailer sways or oscillates. There are various reasons making vehicle sway and oscillate. Almost case it happens at high speed however, if the trailer is affected by crosswinds, buffeting, and improper overloading, it may be a risk of swaying.
Factors of swaying such as:

- High speed
- Strong crosswinds
- Improper overloading
- Sudden controlling of steering wheel
- Uneven road

Trailer stability assist system continuously analyzes the vehicle and trailer instability. When the Trailer stability assist system detects some sway, the brakes are applied automatically to stabilize the vehicle on the front wheel. However, if it is not enough to stabilize, the brakes are applied on all wheels automatically and engine power is properly reduced. When the vehicle is stable from swaying, trailer stability assist system does not operate.

Good braking practices

⚠ WARNING

- **Whenever you leave or park your vehicle, always set the parking brake as far as possible and fully engage the vehicle's transaxle into the P (Park) position. If the parking brake is not fully engaged, the vehicle may move inadvertently and injure yourself and others.**

(Continued)

(Continued)

- **All vehicles should always have the parking brake fully engaged when parking to avoid inadvertent movement of the vehicle which can injure occupants or pedestrians.**

- Check to be sure the parking brake is not engaged and that the parking brake indicator light is out before driving away.
- Driving through water may get the brakes wet. They can also get wet when the vehicle is washed. Wet brakes can be dangerous! Your vehicle will not stop as quickly if the brakes are wet. Wet brakes may cause the vehicle to pull to one side.
  To dry the brakes, apply the brakes lightly until the braking action returns to normal, taking care to keep the vehicle under control at all times. If the braking action does not return to normal, stop as soon as it is safe to do so and have your vehicle inspected by a professional workshop.
  Kia recommends to call an authorized Kia dealer/service partner.

- Do not coast down hills with the vehicle out of gear. This is extremely hazardous. Keep the vehicle in gear at all times, use the brakes to slow down, then shift to a lower gear so that engine braking will help you maintain a safe speed.
- Do not "ride" the brake pedal. Resting your foot on the brake pedal while driving can be dangerous because it can result in the brakes overheating and losing their effectiveness. It also increases the wear of the brake components.
- If a tire goes flat while you are driving, apply the brakes gently and keep the vehicle pointed straight ahead while you slow down. When you are moving slowly enough for it to be safe to do so, pull off the road and stop in a safe place.
- If your vehicle is equipped with an automatic transaxle, do not let your vehicle creep forward. To avoid creeping forward, keep your foot firmly on the brake pedal when the vehicle is stopped.
- Be cautious when parking on a hill. Firmly engage the parking brake and place the shift lever in P (automatic transaxle) or in first or reverse gear (manual transaxle). If your vehicle is facing downhill, turn the front wheels into the curb to help keep the vehicle from rolling.
  If your vehicle is facing uphill, turn the front wheels away from the curb to help keep the vehicle from rolling. If there is no curb or if it is required by other conditions to keep the vehicle from rolling, block the wheels.
- Under some conditions your parking brake can freeze in the engaged position. This is most likely to happen when there is an accumulation of snow or ice around or near the rear brakes or if the brakes are wet. If there is a risk that the parking brake may freeze, apply it only temporarily while you put the shift lever in P (automatic transaxle) or in first or reverse gear (manual transaxle) and block the rear wheels so the vehicle cannot roll. Then release the parking brake.
- Do not hold the vehicle on the upgrade with the accelerator pedal. This can cause the transaxle to overheat. Always use the brake pedal or parking brake.

FORWARD COLLISION-AVOIDANCE ASSIST (FCA) SYSTEM (EXCEPT MIDDLE EAST) – SENSOR FUSION TYPE (FRONT RADAR+FRONT VIEW CAMERA) (IF EQUIPPED)

The Forward Collision-Avoidance Assist (FCA) system is designed to help detect and monitor the vehicle or pedestrians ahead in the roadway through camera recognition to warn the driver that a collision is imminent, and if necessary, apply emergency braking.

⚠ WARNING

Take the following precautions when using the Forward Collision-Avoidance Assist (FCA) system:

- **This system is only a supplemental system and it is not intended to, nor does it replace the need for extreme care and attention of the driver. The sensing range and objects detectable by the sensors are limited. Pay attention to the road conditions at all times.**
- **Never drive too fast in accordance with the road conditions or while cornering.**

(Continued)

(Continued)

- **Always drive cautiously to prevent unexpected and sudden situations from occurring. FCA does not stop the vehicle completely and is not a collision avoidance system.**

System setting and activation

System setting

- The driver can activate the FCA by placing the ignition switch to the ON position and by selecting: 'User Settings ➞ Driver Assistance ➞ Forward Collision-Avoidance Assist'. The FCA system deactivates, when the driver cancels the system setting.



The warning light illuminates on the LCD display, when you cancel the FCA system.

The driver can monitor the FCA ON/OFF status on the LCD display. Also, the warning light illuminates when the ESC (Electronic Stability Control) is turned off. When the warning light remains ON with the FCA activated, have the system checked by a professional workshop. Kia recommends to visit an authorized Kia dealer/service partner.

- The driver can select the initial warning activation time on the LCD display. Go to the 'User Settings ➞ Driver Assistance ➞ Forward Collision Warning ➞ Early/Normal/Late'.
  The options for the initial Forward Collision Warning includes the following:

- EARLY – When this condition is selected, the initial Forward Collision Warning is activated earlier than normal. This setting maximizes the amount of distance between the vehicle or pedestrian ahead before the initial warning occurs. If the 'EARLY' condition feels too sensitive, change

it into 'NORMAL'. When the vehicle ahead suddenly stops, the warning may seem to activate later even if the 'EARLY' condition was selected.

- NORMAL – When this condition is selected, the initial Forward Collision Warning is activated normally. This setting allows for a nominal amount of distance between the vehicle or pedestrian ahead before the initial warning occurs.
- LATE – When this condition is selected, the initial Forward Collision Warning is activated later than normal. This setting reduces the amount of distance between the vehicle or pedestrian ahead before the initial warning occurs. Select this condition only when traffic is light, and you are driving slowly.

Prerequisite for activation

The FCA gets ready to be activated, when the FCA is selected on the LCD display, and when the following prerequisites are satisfied.

- The ESC (Electronic Stability Control) is activated.
- Vehicle speed is over 8 km/h (5mph). (The FCA is only activated within a certain speed range.)
- The system detects a vehicle or a pedestrian in front, which may collide with your vehicle. (The FCA may not be activated or may sound a warning alarm in accordance with the driving situation or vehicle condition.)

❊ The FCA may not operate properly according to the frontal situation, the direction and speed of pedestrian.

⚠ WARNING

- **Completely stop the vehicle on a safe location before operating the switch on the steering wheel to activate/ deactivate the FCA system.**
- **The FCA automatically activates upon placing the Engine Start/Stop button to the ON position. The driver can deactivate the FCA by canceling the system setting on the LCD display.**
- **The FCA automatically deactivates upon canceling the ESC (Electronic Stability Control). When the ESC is canceled, the FCA cannot be activated on the LCD display. The FCA warning light will illuminate, but it does not indicate a malfunction of the system.**

FCA warning message and system control

The FCA produces warning messages and warning alarms in accordance with the collision risk levels, such as abrupt stopping of the vehicle in front, insufficient braking distance detection. Also, it controls the brakes in accordance with the collision risk levels.

The driver can select the initial warning activation time in the User Settings in the LCD display. The options for the initial Forward Collision Warning include Early, Normal or Late initial warning time.

Collision warning (1st warning)



OQL058200LB

This warning message appears on the LCD display with a warning chime. Additionally, some vehicle system intervention occurs by the engine management system to help decelerate the vehicle.

- Your vehicle speed may decelerate moderately.
- The FCA system limitedly controls the brakes to preemptively mitigate impact in a collision.

Emergency braking (2nd warning)



OQL058201LB

This warning message appears on the LCD display with a warning chime. Additionally, some vehicle system intervention occurs by the engine management system to help decelerate the vehicle.

- The FCA system limitedly controls the brakes to preemptively mitigate impact in a collision. The brake control is maximized just before a collision.

Brake operation

- In an urgent situation, the braking system enters into the ready status for prompt reaction against the driver's depressing the brake pedal.

- The FCA provides additional braking power for optimum braking performance, when the driver depresses the brake pedal.
- The braking control is automatically deactivated, when the driver sharply depresses the accelerator pedal, or when the driver abruptly operates the steering wheel.
- The FCA brake control is automatically canceled, when risk factors disappear.

⚠ CAUTION

The driver should always pay great caution to vehicle operation, even though there is no warning message or warning alarm. The warning of the FCA system may not sound while other system warning sounds.

⚠ WARNING

The FCA cannot avoid all collisions. The FCA might not completely stop the vehicle before collisions. The driver should hold the responsibility

(Continued)

(Continued)

to safely drive and control the vehicle.

⚠ WARNING

The FCA system logic operates within certain parameters, such as the distance from the vehicle or pedestrian ahead, the speed of the vehicle ahead, and the driver's vehicle speed. Certain conditions such as inclement weather and road conditions may affect the operation of the FCA system.

⚠ WARNING

Never deliberately drive dangerously to activate the system.

FCA sensor (Front Radar + Front View Camera)



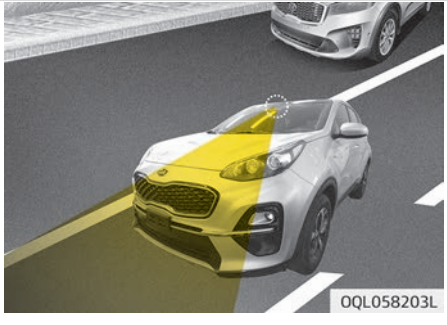

In order for the FCA system to operate properly, always make sure the sensor or sensor cover are clean and free of dirt, snow, and debris.
Dirt, snow, or foreign substances on the lens may adversely affect the sensing performance of the sensor.

✻ NOTICE

- Do not apply license plate molding or foreign objects such as a bumper sticker or a bumper guard near the radar sensor. Doing so may adversely affect the sensing performance of the radar.
- Always keep the radar sensor and the radar cover clean and free of dirt and debris.
- Use only a soft cloth to wash the vehicle. Do not spray pressurized water directly on the sensor or sensor cover.

(Continued)

(Continued)

- Be careful not to apply unnecessary force on the radar sensor or sensor cover. If the sensor is forcibly moved out of proper alignment, the FCA system may not operate correctly. In this case, a warning message may not be displayed. Kia recommends to visit an authorized Kia dealer/service partner.
- If the front bumper becomes damaged in the area around the radar sensor, the FCA system may not operate properly. Kia recommends to visit an authorized Kia dealer/service partner.
- Use only genuine parts to repair or replace a damaged sensor or sensor cover. Do not paint to the sensor cover.
- Never install any accessories or stickers on the front windshield, nor tint the front windshield.

(Continued)

(Continued)

- Never locate any reflective objects (i.e. white paper, mirror) over the dashboard. Any light reflection may cause a malfunction of the system.
- Pay extreme caution to keep the camera out of water.
- Never disassemble the camera assembly, nor apply any impact on the camera assembly.
- Playing the vehicle audio system at high volume may offset the system warning sounds.
- Be careful not to apply unnecessary force on the sensor. If the sensor is forcibly moved out of proper alignment, the system may not operate correctly. In this case, a warning message may not be displayed. Kia recommends to visit an authorized Kia dealer/service partner.

(Continued)

(Continued)

- We recommend you to have the system checked by an authorized Kia dealer when:
  The windshield glass is replaced.
  The radar sensor or the cover gets damaged or replaced.

Warning message and warning light

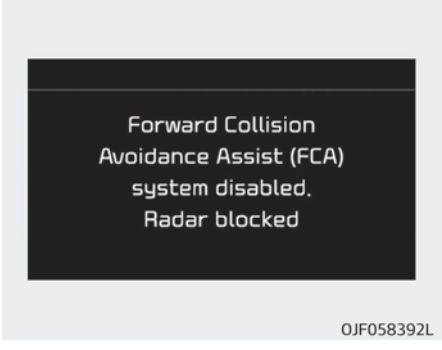

When the sensor cover is blocked with dirt, snow, or debris, the FCA system operation may stop temporarily.
If this occurs, a warning message will appear on the LCD display.

Remove any dirt, snow, or debris and clean the sensor before operating the FCA system.
The system will operate normally when such dirt, snow or debris is removed.
However, the FCA system may not properly operate in an area (e.g. open terrain), where any substances are not detected after turning ON the engine.
Although a warning message will not appear on the LCD display, the FCA may not properly operate.

System malfunction



- When the FCA is not working properly, the FCA warning light ( ) will illuminate and the warning message will appear for a few seconds. After the message disappears, the master warning light ( ) will illuminate. In this case, have the vehicle inspected by a professional workshop. Kia recommends to visit an authorized Kia dealer/service partner
- The FCA warning message may appear along with the illumination of the ESC warning light.

⚠ WARNING

- **The FCA is only a supplemental system for the driver's convenience. The driver should hold the responsibility to control the vehicle operation. Do not solely depend on the FCA system. Rather, maintain a safe braking distance, and, if necessary, depress the brake pedal to reduce the driving speed.**

(Continued)

(Continued)

- **In certain instances and under certain driving conditions, the FCA system may activate unintentionally.**
  Also, in certain instances the front view camera recognition system may not detect the vehicle ahead. The FCA system may not activate and the warning message will not be displayed.
- **Even if there is any problem with the brake control function of the FCA system, the vehicle's basic braking performance will operate normally.**
  However, brake control function for avoiding collision will not activate.
- **If the vehicle in front stops suddenly, you may have less control of the brake system. Therefore, always keep a safe distance between your vehicle and the vehicle in front of you.**
- **The FCA system may not activate if the driver applies the brake pedal to avoid a collision.**

(Continued)

(Continued)

- **The brake control may be insufficient, possibly causing a collision, if a vehicle in front abruptly stops. Always pay extreme caution.**
- **Occupants may get injured, if the vehicle abruptly stops by the activated FCA system. Pay extreme caution.**
- **The FCA system may not activate according to the road conditions, inclement whether, driving conditions or traffic conditions.**
- **The FCA system operates only to detect vehicles, pedestrians in front of the vehicle.**

⚠ WARNING

- **The FCA system does not operate when the vehicle is in reverse.**
- **The FCA system is not designed to detect other objects on the road such as animals.**
- **The FCA system does not detect vehicles in the opposite lane.**

(Continued)

(Continued)

- **The FCA system does not detect cross traffic vehicles that are approaching.**
- **The FCA system cannot detect the driver approaching the side view of a parked vehicle (for example on a dead end street.)**

In these cases, you must maintain a safe braking distance, and if necessary, depress the brake pedal to reduce the driving speed in order to maintain a safe distance.

Limitation of the system

The Forward Collision-Avoidance Assist (FCA) system is designed to monitor the vehicle ahead or a pedestrian in the roadway through radar signals and camera recognition to warn the driver that a collision is imminent, and if necessary, apply emergency braking.
In certain situations, the radar sensor or the camera may not be able to detect the vehicle ahead. In these cases, the FCA system may not operate normally. The driver must pay careful attention in the following situations where the FCA operation may be limited.

Detecting vehicles

The sensor may be limited when:

- The radar sensor or camera is blocked with a foreign object or debris.
- The camera lens is contaminated due to tinted, filmed or coated windshield, damaged glass, or stuck of foreign matter (sticker, bug, etc.) on the glass.
- Inclement weather such as heavy rain or snow obscures the field of view of the radar sensor or camera.
- There is interference by electromagnetic waves.
- There is severe irregular reflection from the radar sensor.
- The radar/camera recognition is limited.
- The vehicle in front is too small to be detected (for example a motorcycle or a bicycle, etc.).
- The vehicle in front is an oversize vehicle or trailer that is too big to be detected by the camera recognition system. (for example a tractor, trailer, etc.).
- The camera's field of view is not well illuminated (either too dark or too much reflection or too much backlight that obscures the field of view).
- The vehicle in front does not have their rear lights properly turned ON or their rear lights are located unusually.
- The outside brightness changes suddenly, for example when entering or exiting a tunnel.
- When light coming from a street light or an oncoming vehicle is reflected on a wet road surface such as a puddle in the road.
- The field of view in front is obstructed by sun glare or headlight of oncoming vehicle.
- The windshield glass is fogged up; a clear view of the road is obstructed.
- The vehicle in front is driving erratically.
- The vehicle is on unpaved or uneven rough surfaces, or roads with sudden gradient changes.
- The vehicle is driven near areas containing metal substances as a construction zone, railroad, etc.
- The vehicle is drives inside a building, such as a basement parking lot.
- The camera does not recognize the entire vehicle in front.
- The camera is damaged.
- The brightness outside is too low such as when the headlamps are not on at night or the vehicle is going through a tunnel.
- The adverse road conditions cause excessive vehicle vibrations while driving.
- The sensor recognition changes suddenly when passing over a speed bump.
- The shadow is on the road by a median strip, trees, etc.
- The vehicle drives through a tollgate.
- The rear part of the vehicle in front is not normally visible. (the vehicle turns in other direction or the vehicle is overturned.)
- The vehicle in front is moving vertically to the driving direction.
- The vehicle in front is stopped vertically.
- The vehicle in front is driving towards your vehicle or reversing.

• You are on a roundabout and the vehicle in front circles.

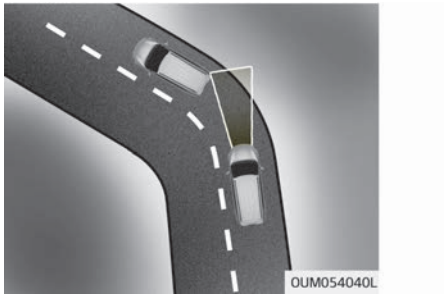

– Driving on a curve
The performance of the FCA system may be limited when driving on a curved road.
On curved roads, the other vehicle on the same lane is not recognized and the FCA system's performance may be degraded. This may result in unnecessary alarm or braking or no alarm or braking when necessary.
Also, in certain instances the front radar sensor or camera recognition system may not detect the vehicle traveling on a curved road.
In these cases, the driver must maintain a safe braking distance, and if necessary, depress the brake pedal to reduce your driving speed in order to maintain a safe distance.



The FCA system may recognize a vehicle in the next lane when driving on a curved road.
In this case, the system may unnecessarily alarm the driver and apply the brake. Always pay attention to road and driving conditions, while driving. If necessary, depress the brake pedal to reduce your driving speed in order to maintain a safe distance.
Also, when necessary depress the accelerator pedal to prevent the system from unnecessarily decelerating your vehicle.

Check to be sure that the road conditions permit safe operation of FCA.

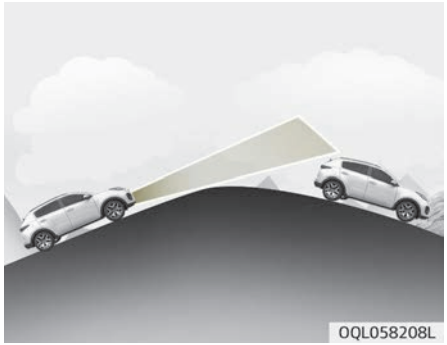

– Driving on a slope
The FCA performance decreases while driving upward or downward on a slope, not recognizing the vehicle in front in the same lane. It may unnecessarily produce the warning message and the warning alarm, or it may not produce the warning message and the warning alarm at all.
When the FCA suddenly recognizes the vehicle in front while passing over a slope, you may experience sharp deceleration.
Always keep your eyes forward while driving upward or downward on a slope, and, if necessary, depress the

brake pedal to reduce your driving speed in order to maintain distance.

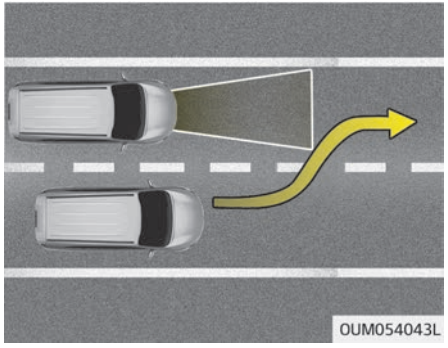

- Changing lanes
  When a vehicle changes lanes in front of you, the FCA system may not immediately detect the vehicle, especially if the vehicle changes lanes abruptly. In this case, you must maintain a safe braking distance, and if necessary, depress the brake pedal to reduce your driving speed in order to maintain a safe distance.

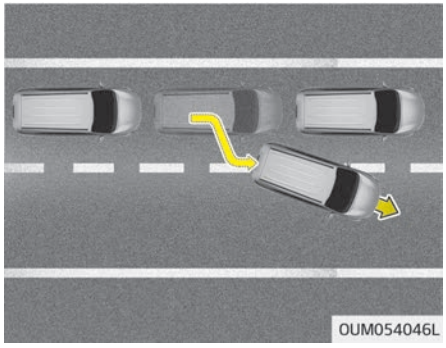

When driving in stop-and-go traffic, and a stopped vehicle in front of you merges out of the lane, the FCA system may not immediately detect the new vehicle that is now in front of you. In this case, you must maintain a safe braking distance, and if necessary, depress the brake pedal to reduce your driving speed in order to maintain a safe distance.

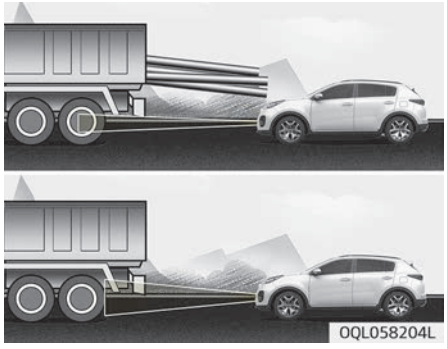

- Detecting the vehicle in front of you
  If the vehicle in front of you has cargo that extends rearward from the cab, or when the vehicle in front of you has higher ground clearance, additional special attention is required.
  The FCA system may not be able to detect the cargo extending from the vehicle. In these instances, you must maintain a safe braking distance from the rearmost object, and if necessary, depress the brake pedal to reduce your driving speed in order to maintain distance.

Detecting pedestrians

The sensor may be limited when:

- The pedestrian is not fully detected by the camera recognition system, for example, if the pedestrian is leaning over or is not fully walking upright.
- The pedestrian is moving very quickly or appears abruptly in the camera detection area.
- The pedestrian is wearing clothing that easily blends into the background, making it difficult to be detected by the camera recognition system.
- The outside lighting is too bright (e.g. when driving in bright sunlight or in sun glare) or too dark (e.g. when driving on a dark rural road at night).
- It is difficult to detect and distinguish the pedestrian from other objects in the surroundings, for example, when there is a group of pedestrians, or a large crowd.
- There is an item similar to a person's body structure.
- The pedestrian is small.
- The pedestrian has impaired mobility.
- The sensor recognition is limited.
- The radar sensor or camera is blocked with a foreign object or debris.
- Inclement weather such as heavy rain or snow obscures the field of view of the radar sensor or camera.
- When light coming from a street light or an oncoming vehicle is reflected on a wet road surface such as a puddle in the road.
- The field of view in front is obstructed by sun glare.
- The windshield glass is fogged up; a clear view of the road is obstructed.
- The adverse road conditions cause excessive vehicle vibrations while driving.
- When the pedestrian suddenly interrupts in front of the vehicle.
- When there is any other electromagnetic interference.
- When the construction area, rail or other metal object is near the pedestrian.

⚠ WARNING

- **Do not use the Forward Collision - Avoidance Assist (FCA) system when towing a vehicle. Application of the FCA system while towing may adversely affect the safety of your vehicle or the towing vehicle.**
- **Use extreme caution when the vehicle in front of you has cargo that extends rearward from the cab, or when the vehicle in front of you has higher ground clearance.**
- **The FCA system is designed to detect and monitor the vehicle ahead in the roadway through radar signals and camera recognition. It is not designed to detect bicycles, motorcycles, or smaller wheeled objects such as luggage bags, shopping carts, or strollers.**
- **Never try to test the operation of the FCA system. Doing so may cause severe injury or death.**
- **When front bumper or windshield glass is replaced or repaired, have the vehicle inspected by a professional workshop. Kia recommends to visit an authorized Kia dealer/ service partner.**

✻ NOTICE

In some instances, the FCA system may be cancelled when subjected to electromagnetic interference.

FORWARD COLLISION-AVOIDANCE ASSIST (FCA) SYSTEM (FOR MIDDLE EAST) – SENSOR FUSION TYPE (FRONT RADAR+FRONT VIEW CAMERA) (IF EQUIPPED)

The Forward Collision-Avoidance Assist (FCA) system is designed to help detect and monitor the vehicle ahead in the roadway through camera recognition to warn the driver that a collision is imminent, and if necessary, apply emergency braking.

⚠ WARNING

Take the following precautions when using the Forward Collision-Avoidance Assist (FCA) system:

- **This system is only a supplemental system and it is not intended to, nor does it replace the need for extreme care and attention of the driver. The sensing range and objects detectable by the sensors are limited. Pay attention to the road conditions at all times.**
- **Never drive too fast in accordance with the road conditions or while cornering.**

(Continued)

(Continued)

- **Always drive cautiously to prevent unexpected and sudden situations from occurring. FCA does not stop the vehicle completely and is not a collision avoidance system.**

System setting and activation

System setting

- The driver can activate the FCA by placing the ignition switch to the ON position and by selecting: 'User Settings ➞ Driver Assistance ➞ Forward Collision-Avoidance Assist'. The FCA system deactivates, when the driver cancels the system setting.



The warning light illuminates on the LCD display, when you cancel the FCA system.

The driver can monitor the FCA ON/OFF status on the LCD display. Also, the warning light illuminates when the ESC (Electronic Stability Control) is turned off. When the warning light remains ON with the FCA activated, have the system checked by a professional workshop. Kia recommends to visit an authorized Kia dealer/service partner.

- The driver can select the initial warning activation time on the LCD display. Go to the 'User Settings ➞ Driver Assistance ➞ Forward Collision Warning ➞ Early/Normal/Late'.
  The options for the initial Forward Collision Warning includes the following:

- EARLY – When this condition is selected, the initial Forward Collision Warning is activated earlier than normal. This setting maximizes the amount of distance between the vehicle or pedestrian ahead before the initial warning occurs. If the 'EARLY' condition feels too sensitive, change

it into 'NORMAL'. When the vehicle ahead suddenly stops, the warning may seem to activate later even if the 'EARLY' condition was selected

• NORMAL – When this condition is selected, the initial Forward Collision Warning is activated normally. This setting allows for a nominal amount of distance between the vehicle or pedestrian ahead before the initial warning occurs.

• LATE – When this condition is selected, the initial Forward Collision Warning is activated later than normal. This setting reduces the amount of distance between the vehicle or pedestrian ahead before the initial warning occurs. Select this condition only when traffic is light, and you are driving slowly.

Prerequisite for activation

The FCA gets ready to be activated, when the FCA is selected on the LCD display, and when the following prerequisites are satisfied.

– The ESC (Electronic Stability Control) is activated.

– Vehicle speed is over 8 km/h (5mph). (The FCA is only activated within a certain speed range.)

– The system detects a vehicle in front, which may collide with your vehicle. (The FCA may not be activated or may sound a warning alarm in accordance with the driving situation or vehicle condition.)

✻ The FCA may not operate properly according to the frontal situation, the direction.

⚠ WARNING

• Completely stop the vehicle on a safe location before operating the switch on the steering wheel to activate/ deactivate the FCA system.

(Continued)

(Continued)

• The FCA automatically activates upon placing the Engine Start/Stop button to the ON position. The driver can deactivate the FCA by canceling the system setting on the LCD display.

• The FCA automatically deactivates upon canceling the ESC (Electronic Stability Control). When the ESC is canceled, the FCA cannot be activated on the LCD display. The FCA warning light will illuminate, but it does not indicate a malfunction of the system.

FCA warning message and system control

The FCA produces warning messages and warning alarms in accordance with the collision risk levels, such as abrupt stopping of the vehicle in front, insufficient braking distance detection. Also, it controls the brakes in accordance with the collision risk levels.

The driver can select the initial warning activation time in the User Settings in the LCD display. The options for the initial Forward Collision Warning include Early, Normal or Late initial warning time.

Collision Warning (1st warning)



OQL058200LB

This warning message appears on the LCD display with a warning chime. Additionally, some vehicle system intervention occurs by the engine management system to help decelerate the vehicle.

- Your vehicle speed may decelerate moderately.
- The FCA system limitedly controls the brakes to preemptively mitigate impact in a collision.

Emergency braking (2nd warning)



OQL058201LB

This warning message appears on the LCD display with a warning chime. Additionally, some vehicle system intervention occurs by the engine management system to help decelerate the vehicle.

- The FCA system limitedly controls the brakes to preemptively mitigate impact in a collision. The brake control is maximized just before a collision.

Brake operation

- In an urgent situation, the braking system enters into the ready status for prompt reaction against the driver's depressing the brake pedal.
- The FCA provides additional braking power for optimum braking performance, when the driver depresses the brake pedal.
- The braking control is automatically deactivated, when the driver sharply depresses the accelerator pedal, or when the driver abruptly operates the steering wheel.
- The FCA brake control is automatically canceled, when risk factors disappear.

⚠ CAUTION

The driver should always pay great caution to vehicle operation, even though there is no warning message or warning alarm. The warning of the FCA system may not sound while other system warning sounds.

⚠ WARNING

The FCA cannot avoid all collisions. The FCA might not completely stop the vehicle before collisions. The driver should hold the responsibility to safely drive and control the vehicle.

⚠ WARNING

The FCA system logic operates within certain parameters, such as the distance from the vehicle ahead, the speed of the vehicle ahead, and the driver's vehicle speed. Certain conditions such as inclement weather and road conditions may affect the operation of the FCA system.

⚠ WARNING

Never deliberately drive dangerously to activate the system.

FCA sensor (Front Radar + Front View Camera)



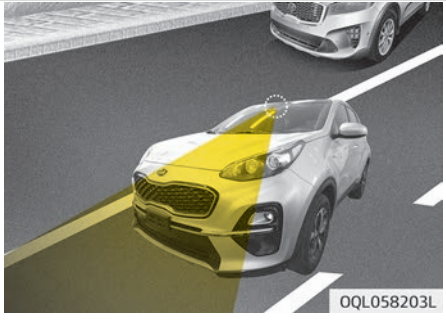

In order for the FCA system to operate properly, always make sure the sensor or sensor cover are clean and free of dirt, snow, and debris.
Dirt, snow, or foreign substances on the lens may adversely affect the sensing performance of the sensor.

✻ NOTICE

- Do not apply license plate molding or foreign objects such as a bumper sticker or a bumper guard near the radar sensor. Doing so may adversely affect the sensing performance of the radar.
- Always keep the radar sensor and the radar cover clean and free of dirt and debris.
- Use only a soft cloth to wash the vehicle. Do not spray pressurized water directly on the sensor or sensor cover.

(Continued)

(Continued)

- Be careful not to apply unnecessary force on the radar sensor or sensor cover. If the sensor is forcibly moved out of proper alignment, the FCA system may not operate correctly. In this case, a warning message may not be displayed. Kia recommends to visit an authorized Kia dealer/service partner.
- If the front bumper becomes damaged in the area around the radar sensor, the FCA system may not operate properly. Kia recommends to visit an authorized Kia dealer/service partner.
- Use only genuine parts to repair or replace a damaged sensor or sensor cover. Do not paint to the sensor cover.
- Never install any accessories or stickers on the front windshield, nor tint the front windshield.

(Continued)

(Continued)

- Never locate any reflective objects (i.e. white paper, mirror) over the dashboard. Any light reflection may cause a malfunction of the system.
- Pay extreme caution to keep the camera out of water.
- Never disassemble the camera assembly, nor apply any impact on the camera assembly.
- Playing the vehicle audio system at high volume may offset the system warning sounds.
- Be careful not to apply unnecessary force on the sensor. If the sensor is forcibly moved out of proper alignment, the system may not operate correctly. In this case, a warning message may not be displayed. Kia recommends to visit an authorized Kia dealer/service partner.

(Continued)

(Continued)

- We recommend you to have the system checked by an authorized KIA dealer when: The windshield glass is replaced. The radar sensor or the cover gets damaged or replaced.

Warning message and warning light

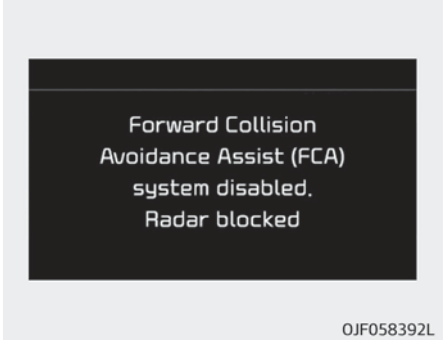

When the sensor cover is blocked with dirt, snow, or debris, the FCA system operation may stop temporarily.
If this occurs, a warning message will appear on the LCD display.

Remove any dirt, snow, or debris and clean the sensor before operating the FCA system.
The system will operate normally when such dirt, snow or debris is removed.
However, the FCA system may not properly operate in an area (e.g. open terrain), where any substances are not detected after turning ON the engine.
Although a warning message will not appear on the LCD display, the FCA may not properly operate.

System malfunction



- When the FCA is not working properly, the FCA warning light ( ) will illuminate and the warning message will appear for a few seconds. After the message disappears, the master warning light (⚠) will illuminate. In this case, have the vehicle inspected by a professional workshop. Kia recommends to visit an authorized Kia dealer/service partner
- The FCA warning message may appear along with the illumination of the ESC warning light.

⚠ WARNING

- **The FCA is only a supplemental system for the driver's convenience. The driver should hold the responsibility to control the vehicle operation. Do not solely depend on the FCA system. Rather, maintain a safe braking distance, and, if necessary, depress the brake pedal to reduce the driving speed.**

(Continued)

(Continued)

- **In certain instances and under certain driving conditions, the FCA system may activate unintentionally.**
  Also, in certain instances the front view camera recognition system may not detect the vehicle ahead. The FCA system may not activate and the warning message will not be displayed.
- **Even if there is any problem with the brake control function of the FCA system, the vehicle's basic braking performance will operate normally.**
  However, brake control function for avoiding collision will not activate.
- **If the vehicle in front stops suddenly, you may have less control of the brake system. Therefore, always keep a safe distance between your vehicle and the vehicle in front of you.**
- **The FCA system may not activate if the driver applies the brake pedal to avoid a collision.**

(Continued)

(Continued)

- **The brake control may be insufficient, possibly causing a collision, if a vehicle in front abruptly stops. Always pay extreme caution.**
- **Occupants may get injured, if the vehicle abruptly stops by the activated FCA system. Pay extreme caution.**
- **The FCA system may not activate according to the road conditions, inclement whether, driving conditions or traffic conditions.**
- **The FCA system operates only to detect vehicles, pedestrians in front of the vehicle.**

⚠ WARNING

- **The FCA system does not operate when the vehicle is in reverse.**
- **The FCA system is not designed to detect other objects on the road such as animals.**
- **The FCA system does not detect vehicles in the opposite lane.**

(Continued)

(Continued)

- **The FCA system does not detect cross traffic vehicles that are approaching.**
- **The FCA system cannot detect the driver approaching the side view of a parked vehicle (for example on a dead end street.)**

In these cases, you must maintain a safe braking distance, and if necessary, depress the brake pedal to reduce the driving speed in order to maintain a safe distance.

Limitation of the system

The Forward Collision-Avoidance Assist (FCA) system is designed to monitor the vehicle ahead in the roadway through radar signals and camera recognition to warn the driver that a collision is imminent, and if necessary, apply emergency braking.
In certain situations, the radar sensor or the camera may not be able to detect the vehicle ahead. In these cases, the FCA system may not operate normally. The driver must pay careful attention in the following situations where the FCA operation may be limited.

Detecting vehicles

The sensor may be limited when:

- The radar sensor or camera is blocked with a foreign object or debris.
- The camera lens is contaminated due to tinted, filmed or coated windshield, damaged glass, or stuck of foreign matter (sticker, bug, etc.) on the glass.
- Inclement weather such as heavy rain or snow obscures the field of view of the radar sensor or camera.
- There is interference by electromagnetic waves.
- There is severe irregular reflection from the radar sensor.
- The radar/camera recognition is limited.
- The vehicle in front is too small to be detected (for example a motorcycle or a bicycle, etc.).
- The vehicle in front is an oversize vehicle or trailer that is too big to be detected by the camera recognition system. (for example a tractor, trailer, etc.).

- The camera's field of view is not well illuminated (either too dark or too much reflection or too much backlight that obscures the field of view).
- The vehicle in front does not have their rear lights properly turned ON or their rear lights are located unusually.
- The outside brightness changes suddenly, for example when entering or exiting a tunnel.
- When light coming from a street light or an oncoming vehicle is reflected on a wet road surface such as a puddle in the road.
- The field of view in front is obstructed by sun glare or headlight of oncoming vehicle.
- The windshield glass is fogged up; a clear view of the road is obstructed.
- The vehicle in front is driving erratically.
- The vehicle is on unpaved or uneven rough surfaces, or roads with sudden gradient changes.
- The vehicle is driven near areas containing metal substances as a construction zone, railroad, etc.
- The vehicle is drives inside a building, such as a basement parking lot.
- The camera does not recognize the entire vehicle in front.
- The camera is damaged.
- The brightness outside is too low such as when the headlamps are not on at night or the vehicle is going through a tunnel.
- The adverse road conditions cause excessive vehicle vibrations while driving.
- The sensor recognition changes suddenly when passing over a speed bump.
- The shadow is on the road by a median strip, trees, etc.
- The vehicle drives through a tollgate.
- The rear part of the vehicle in front is not normally visible. (the vehicle turns in other direction or the vehicle is overturned.)
- The vehicle in front is moving vertically to the driving direction.
- The vehicle in front is stopped vertically.
- The vehicle in front is driving towards your vehicle or reversing.
- You are on a roundabout and the vehicle in front circles.

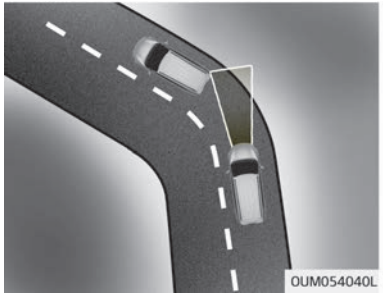

– Driving on a curve
The performance of the FCA system may be limited when driving on a curved road.
On curved roads, the other vehicle on the same lane is not recognized and the FCA system's performance may be degraded. This may result in unnecessary alarm or braking or no alarm or braking when necessary.
Also, in certain instances the front radar sensor or camera recognition system may not detect the vehicle traveling on a curved road.
In these cases, the driver must maintain a safe braking distance, and if necessary, depress the brake pedal

to reduce your driving speed in order to maintain a safe distance.



The FCA system may recognize a vehicle in the next lane when driving on a curved road.
In this case, the system may unnecessarily alarm the driver and apply the brake. Always pay attention to road and driving conditions, while driving. If necessary, depress the brake pedal to reduce your driving speed in order to maintain a safe distance.
Also, when necessary depress the accelerator pedal to prevent the system from unnecessarily decelerating your vehicle.

Check to be sure that the road conditions permit safe operation of FCA.

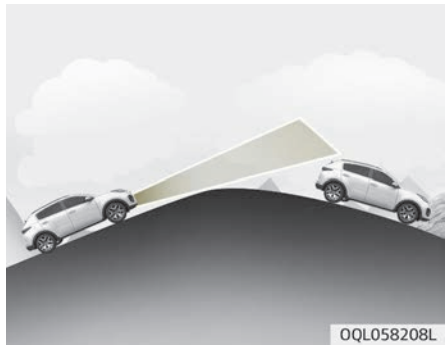

– Driving on a slope
The FCA performance decreases while driving upward or downward on a slope, not recognizing the vehicle in front in the same lane. It may unnecessarily produce the warning message and the warning alarm, or it may not produce the warning message and the warning alarm at all.
When the FCA suddenly recognizes the vehicle in front while passing over a slope, you may experience sharp deceleration.
Always keep your eyes forward while driving upward or downward on a slope, and, if necessary, depress the brake pedal to reduce your driving speed in order to maintain distance.

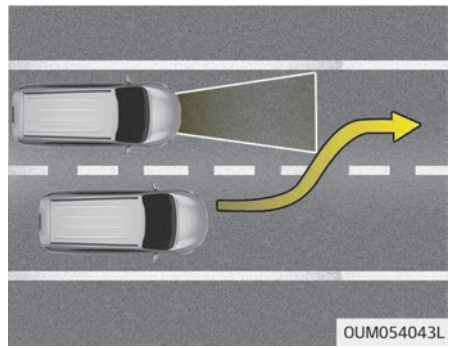

– Changing lanes
When a vehicle changes lanes in front of you, the FCA system may not immediately detect the vehicle, especially if the vehicle changes lanes abruptly. In this case, you must maintain a safe braking distance, and if necessary, depress the brake pedal to reduce your driving speed in order to maintain a safe distance.

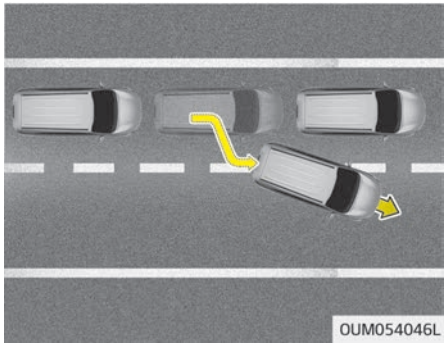

When driving in stop-and-go traffic, and a stopped vehicle in front of you merges out of the lane, the FCA system may not immediately detect the new vehicle that is now in front of you. In this case, you must maintain a safe braking distance, and if necessary, depress the brake pedal to reduce your driving speed in order to maintain a safe distance.

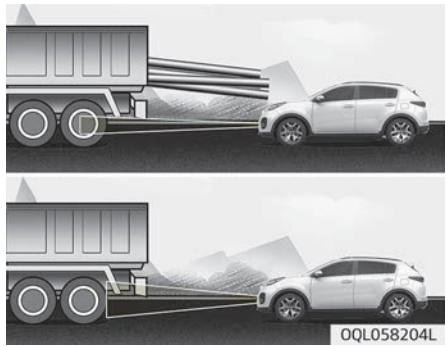

- Detecting the vehicle in front of you
  If the vehicle in front of you has cargo that extends rearward from the cab, or when the vehicle in front of you has higher ground clearance, additional special attention is required.
  The FCA system may not be able to detect the cargo extending from the vehicle. In these instances, you must maintain a safe braking distance from the rearmost object, and if necessary, depress the brake pedal to reduce your driving speed in order to maintain distance.

⚠ WARNING

- **Do not use the Forward Collision - Avoidance Assist (FCA) system when towing a vehicle. Application of the FCA system while towing may adversely affect the safety of your vehicle or the towing vehicle.**
- **Use extreme caution when the vehicle in front of you has cargo that extends rearward from the cab, or when the vehicle in front of you has higher ground clearance.**
- **The FCA system is designed to detect and monitor the vehicle ahead in the roadway through radar signals and camera recognition. It is not designed to detect bicycles, motorcycles, or smaller wheeled objects such as luggage bags, shopping carts, or strollers.**
- **Never try to test the operation of the FCA system. Doing so may cause severe injury or death.**
- **When front bumper or windshield glass is replaced or repaired, have the vehicle inspected by a professional workshop. Kia recommends to visit an authorized Kia dealer/service partner.**

✻ NOTICE

In some instances, the FCA system may be cancelled when subjected to electromagnetic interference.

DOWNHILL BRAKE CONTROL (DBC) (IF EQUIPPED)

■ Type A

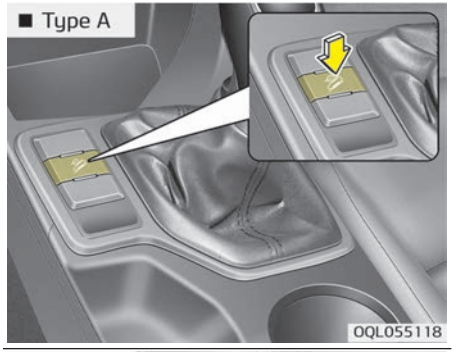

■ Type B

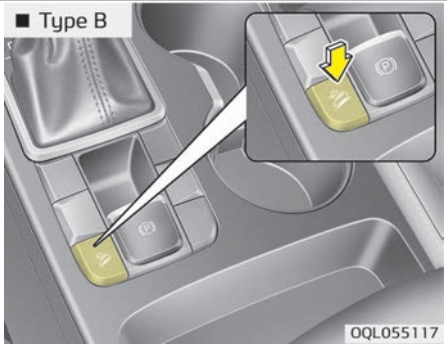

■ Type C

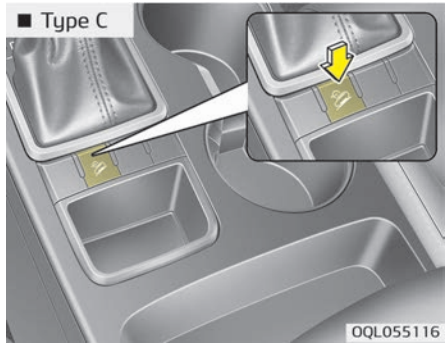

The Downhill Brake Control (DBC) supports the driver come down a steep hill without depressing the brake pedal.
It slows down the vehicle under 8 km/h (5 mph) (for automatic transaxle) or 8 km/h (5 mph) (for manual transaxle vehicles) and lets the driver concentrate on steering the vehicle.

⚠ WARNING

Always turn off the DBC on normal roads. The DBC might activate inadvertently from the standby mode
(Continued)

(Continued)

when driving through speed bumps or making sharp curves.

✻ NOTICE

- The DBC defaults to the OFF position whenever the ignition switch is placed in the ON position.
- Noise or vibration may occur from the brakes when the DBC is activated.
- The rear stop light comes on when DBC is activated.

DBC operation

Mode	Indicator light	Description
Standby	 illuminated	Press the DBC button when the vehicle speed is under 40 km/h (25 mph). The DBC system will turn ON and enter the standby mode. The system does not turn ON if the vehicle speed is over 40 km/h (25 mph).
Activated	 blinks	In the standby mode, if the vehicle speed is under 35 km/h (22 mph) while driving down a steep hill, the DBC will activate automatically.
Temporarily deactivated	 illuminated	In the activated mode, the DBC will temporarily deactivate under the following conditions: • The hill is not steep enough. • The brake pedal or accelerator pedal is depressed. If the above conditions are gone, the DBC will automatically activate again.
OFF	 not illuminated	The DBC will turn OFF under the following conditions: • The DBC button is pressed again. • The vehicle speed is over 60 km/h (38 mph).

⚠ WARNING

If the DBC red indicator light illuminates, the system may have overheated or have malfunctioned. When the warning light illuminates even though the DBC system has cooled off, in this case, have the vehicle checked by a professional workshop as soon as possible.
Kia recommends to visit an authorized Kia dealer/service partner.

✻ NOTICE

- The DBC may not deactivate on steep inclines even though the brake or accelerator pedal is depressed.
- Do not turn on the DBC when driving with shift lever in 3rd gear (and above) for vehicles with manual transaxle. The engine may stop if the DBC system is activated.
- The DBC does not operate when:
  - The shift lever is in P (Park).
  - The ESC is activated.

GOOD BRAKING PRACTICES

⚠ WARNING

Whenever leaving the vehicle or parking, always come to a complete stop and continue to depress the brake pedal. Move the shift lever into the P (Park) position, then apply the parking brake, and place the Engine Start/Stop button in the OFF position.
Vehicles with the parking brake not fully engaged are at risk for moving inadvertently and causing injury to yourself or others.

Wet brakes can be dangerous! The brakes may get wet if the vehicle is driven through standing water or if it is washed. Your vehicle will not stop as quickly if the brakes are wet. Wet brakes may cause the vehicle to pull to one side.
To dry the brakes, apply the brakes lightly until the braking action returns to normal, taking care to keep the vehicle under control at all times. If the braking action does not return to normal, stop as soon as it is safe to do so and have your vehicle inspected by a professional workshop.

Kia recommends to call an authorized Kia dealer/service partner.
DO NOT drive with your foot resting on the brake pedal. Even light, but constant pedal pressure can result in the brakes overheating, brake wear, and possibly even brake failure.
If a tire goes flat while you are driving, apply the brakes gently and keep the vehicle pointed straight ahead while you slow down. When you are moving slowly enough for it to be safe to do so, pull off the road and stop in a safe location.
Keep your foot firmly on the brake pedal when the vehicle is stopped to prevent the vehicle from rolling forward.

CRUISE CONTROL SYSTEM (IF EQUIPPED)

■ Type A



■ Type B



1. Cruise indicator
2. Speed set indicator

The cruise control system allows you to program the vehicle to maintain a constant speed without pressing the accelerator pedal.

This system is designed to function above approximately 30 km/h (20 mph).

⚠ WARNING

- **If the cruise control is left on (cruise indicator light is illuminated), the cruise control can be switched on accidentally. Keep the cruise control system off when the cruise control is not in use, to avoid inadvertently setting a speed.**
- **Use the cruise control system only when traveling on open highways in good weather.**
- **Do not use the cruise control when it may not be safe to keep the vehicle at a constant speed, for instance, driving in heavy or varying traffic, or on slippery (rainy, icy or snow-covered) or winding roads or over 6% up-hill or down-hill roads.**
- **Pay particular attention to the driving conditions whenever using the cruise control system.**

(Continued)

(Continued)

- **Be careful when driving downhill using the cruise control system, which may increase the vehicle speed.**

⚠ CAUTION

During cruise-speed driving of a manual transaxle vehicle, do not shift into neutral without depressing the clutch pedal, since the engine will be overrevved. If this happens, depress the clutch pedal or press the cruise control ON-OFF switch.

✻ NOTICE

- During normal cruise control operation, when the SET switch is activated or reactivated after applying the brakes, the cruise control will energize after approximately 3 seconds. This delay is normal.

(Continued)

(Continued)

- To activate cruise control, depress the brake pedal at least once after turning the ignition switch to the ON position or starting the engine. This is to check if the brake switch which is important part to cancel cruise control is in normal condition.

Cruise control switch

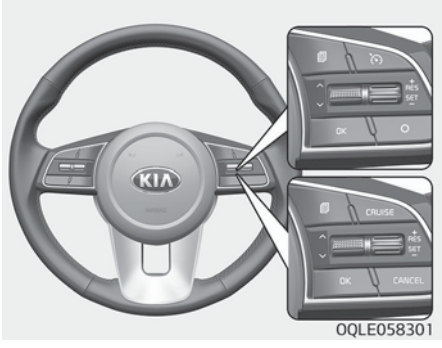

CANCEL/O: Cancels cruise control operation.
CRUISE/: Turns cruise control system on or off.
RES+: Resumes or increases cruise control speed.
SET-: Sets or decreases cruise control speed.

To set cruise control speed:

■ Type A

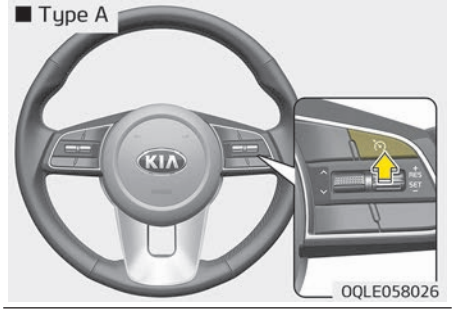

■ Type B

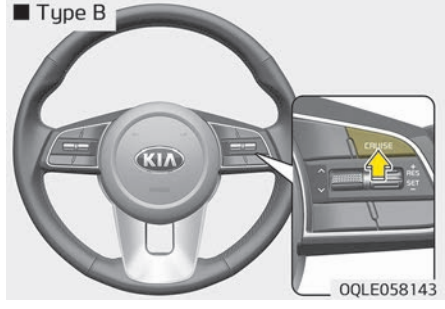

1. Press the CRUISE/ button on the steering wheel, to turn the system on. The cruise indicator light will illuminate.
2. Accelerate to the desired speed, which must be more than approximately 30 km/h (20 mph).

✻ NOTICE

■ Manual transaxle

For manual transaxle vehicles, you should depress the brake pedal at least once to set the cruise control after starting the engine.

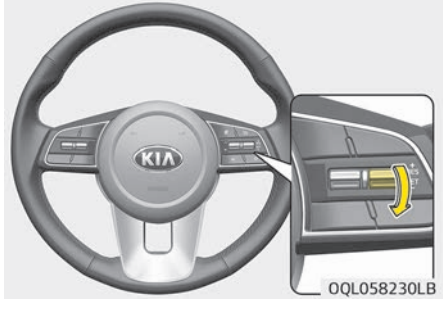

3. Move the lever down (to SET-), and release it at the desired speed. The cruise set indicator light will illuminate. Release the accelerator pedal

at the same time. The desired speed will automatically be maintained.

On a steep grade, the vehicle may slow down or speed up slightly while going downhill.

To increase cruise control set speed:

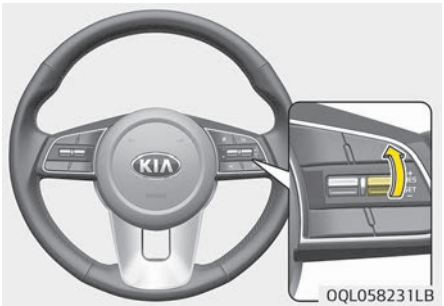

Follow either of these procedures:

- Move the lever up (to RES+) and hold it. Your vehicle will accelerate. Release the lever at the speed you want.
- Move the lever up (to RES+) and release it immediately. The cruising speed will increase by 2 km/h (1 mph) each time you move the lever up (to RES+) in this manner.

To decrease the cruising speed:

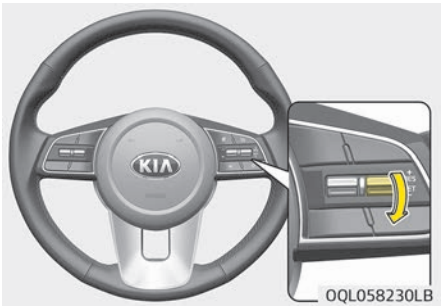

Follow either of these procedures:

- Move the lever down (to SET-) and hold it. Your vehicle will gradually slow down. Release the lever at the speed you want to maintain.
- Move the lever down (to SET-) and release it immediately. The cruising speed will decrease by 2 km/h (1 mph) each time you move the lever down (to SET-) in this manner.

To temporarily accelerate with the cruise control on:

If you want to speed up temporarily when the cruise control is on, depress the accelerator pedal. Increased speed will not interfere with cruise control operation or change the set speed.
To return to the set speed, take your foot off the accelerator pedal.

To cancel cruise control, do one of the following:

■ Type A

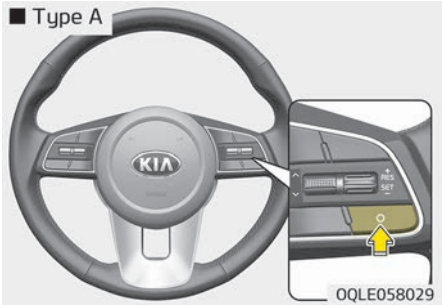

■ Type B

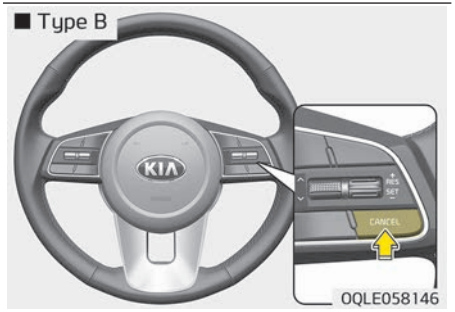

- Depress the brake pedal.
- Depress the clutch pedal if equipped with a manual transaxle.
- Shift into N (Neutral) if equipped with an automatic transaxle.
- Press the CANCEL/O button located on the steering wheel.
- Decrease the vehicle speed lower than the memory speed by approximately 20 km/h (12 mph).
- Decrease the vehicle speed to less than approximately 25 km/h (15 mph).

Each of these actions will cancel cruise control operation (the cruise set indicator light will go off), but it will not turn the system off. If you wish to resume cruise control operation, move up the lever (to RES+) located on your steering wheel. You will return to your previously preset speed.

To resume cruising speed at more than approximately 30 km/h (20 mph) :

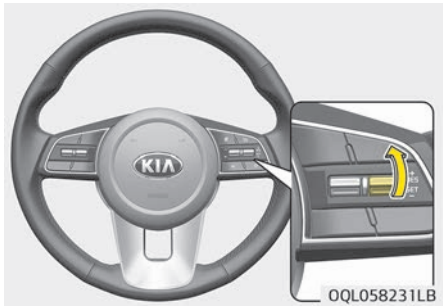

If any method other than the CRUISE/ button was used to cancel cruising speed and the system is still activated, the most recent set speed will automatically resume when the RES+ switch is pushed.
It will not resume, however, if the vehicle speed has dropped below approximately 30 km/h (20 mph).

To turn cruise control off, do one of the following:

- Press the CRUISE/ button (the cruise indicator light will be turned off).

• Turn the ignition off.

Both of these actions cancel cruise control operation. If you want to resume cruise control operation, repeat the steps provided in "To set cruise control speed" on page 6-87.

MANUAL SPEED LIMIT ASSIST (IF EQUIPPED)

You can set the speed limit when you do not want to drive over a specific speed.
If you drive over the preset speed limit, the warning system operates (set speed limit will blink and chime will sound) until the vehicle speed returns within the speed limit.

✻ NOTICE

While Manual Speed Limit Assist is in operation, the cruise control system cannot be activated.

To set speed limit:

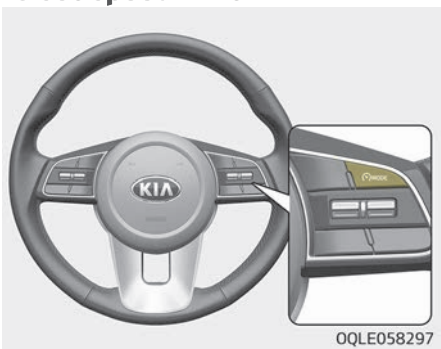

1. Press the (CRUISE / MODE) button twice on the steering wheel, to turn the system on.



The speed limit indicator light will illuminate.

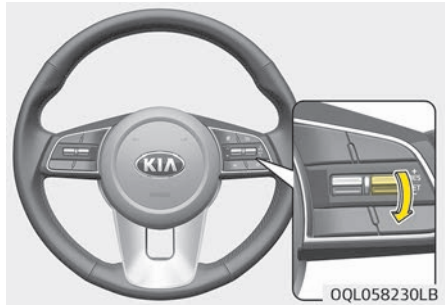

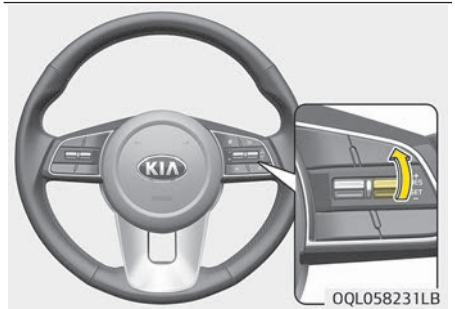

2. Move the lever down (to SET-).

3. Move the lever up (to RES+) or down (to SET-), and release it at the desired speed. Move the lever up (to RES+) or down (to SET-) and hold it. The speed will increase or decrease by 5 km/h (3 mph).
   Move the lever up (to RES+) or down (SET-) and release it immediately. The speed will increase or decrease by 1 km/h.

The set speed limit will display on the instrument cluster.



The set speed limit will be displayed.

To drive over the preset speed limit you must depress hard on the accelerator pedal (more than approximately 80%) until the kick down mechanism works with a clicking noise. Then the set speed limit will blink and chime will sound until you return the vehicle speed within the speed limit.

✻ NOTICE

- Depressing the accelerator pedal less than approximately 50%, the vehicle will not speed over the preset speed limit but maintain the vehicle speed within the speed limit.
- A clicking noise heard from the kick down mechanism by depressing the accelerator pedal fully is a normal condition.

To turn off the Manual Speed Limit Assist, do one of the following:

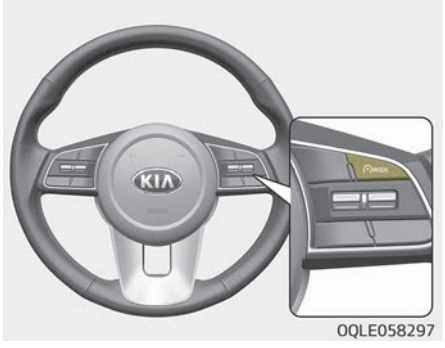

- Press the cruise switch.
- Turn the ignition off.

If you press the cancel O switch once, the set speed limit will cancel, but it will not turn the system off. If you wish to reset the speed limit, move the lever up (to RES+) or down (to SET-) to the desired speed.

⚠ CAUTION

The "---" indicator will blink if there is a problem with Manual Speed Limit Assist system.
If this occurs, have the system checked by a professional workshop. Kia recommends to visit an authorized Kia dealer/service partner.

SMART CRUISE CONTROL WITH STOP & GO SYSTEM (IF EQUIPPED)



1. Cruise indicator (CRUISE)
2. Set speed
3. Vehicle-to-vehicle distance

To see the SCC screen on the LCD display on the cluster, select Assist mode ( ). For more information, refer to "LCD Display Modes" on page 4-55.
The Smart Cruise Control System allows you to program the vehicle to maintain constant speed and minimum distance between the vehicle ahead.
The Smart Cruise Control system will automatically adjust your vehicle speed to maintain your programmed speed and following distance without requiring you to depress the accelerator or brake pedals.

⚠ WARNING

For your safety, please read the owner's manual before using the Smart Cruise Control system.

⚠ WARNING

The Smart Cruise Control System is not a substitute for safe driving practices, but a convenience function only. It is the responsibility of the driver to always check the speed and distance to the vehicle ahead.

Smart cruise control switch

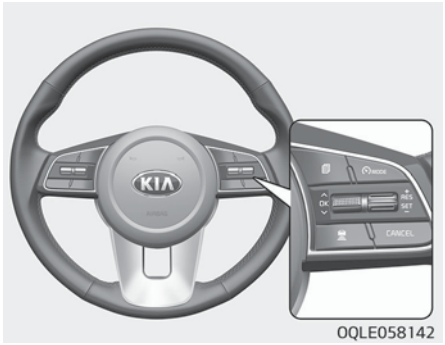

CRUISE (/ MODE) : Turns cruise control system on or off.
RES+ : Resumes or increases cruise control speed.
SET- : Sets or decreases cruise control speed.
: Sets vehicle-to-vehicle distance.
CANCEL/O : Cancels cruise control operation.

Smart cruise control speed

To set smart cruise control speed

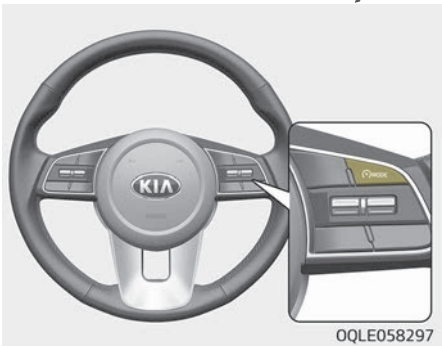

1. Push the CRUISE (/MODE) button on the steering wheel to turn the system on.
   The CRUISE indicator in the instrument will illuminate.
2. Accelerate to the desired speed.
   The smart cruise control speed can be set as follows:
   - 30 km/h (20 mph) ~ 180 km/h (110 mph): when there is no vehicle in front
   - 0 km/h (0 mph) ~ 180 km/h (110 mph): when there is a vehicle in front

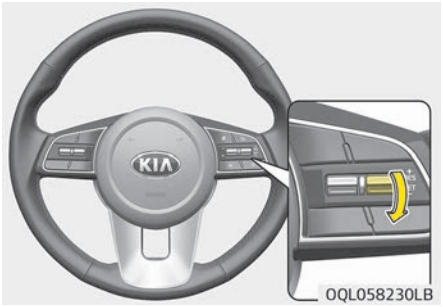

3. Move the lever down (SET-), and release it at the desired speed.The Set Speed and Vehicle-to-Vehicle Distance on the LCD display will illuminate.
4. Release the accelerator pedal. The desired speed will automatically be maintained.

To set speed limit control (if equipped)

First, switch the mode to Smart Cruise Control by pressing the button if equipped with the Speed Limit Control System. CRUISE (/MODE)
The mode changes, as below, whenever the CRUISE (/MODE) button is pressed.

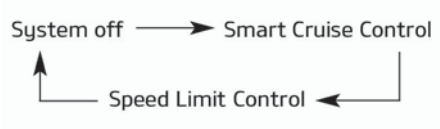

✻ NOTICE

If there is a vehicle in front of you, the speed may decrease to maintain the distance to the vehicle ahead. On a steep grade, the vehicle may slow down or speed up slightly while going uphill or downhill.

✻ NOTICE

Vehicle speed may decrease on an upward slope and increase on a downward slope.
The speed will be set to 30 km/h and your vehicle speed is 0~30 m/h

To increase smart cruise control set speed

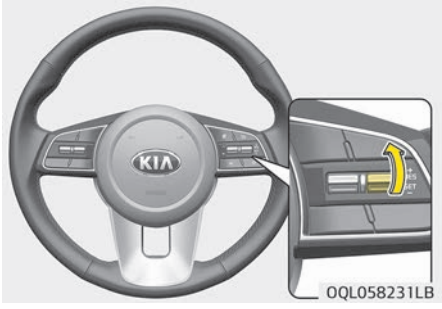

Follow either of these procedures:

- Move the lever up (to RES+), and hold it. Your vehicle set speed will increase by 10 km/h (5 mph). Release the lever at the speed you want.
- Push the lever up (RES+), and release it immediately. The cruising speed will increase by 1 km/h (1 mph) each time you move the lever up in this manner.
- You can set the speed to 180 km/h (110 mph).

⚠ CAUTION

Check the driving condition before using the lever. Driving speed sharply increases, when you push up and hold the lever.

To decrease the smart cruise control set speed



Follow either of these procedures:

- Push the lever down (SET-), and hold it. Your vehicle set speed will decrease by 10 km/h (5 mph). Release the lever at the speed you want.
- Push the lever down (SET-), and release it immediately. The cruising speed will decrease by 1 km/h (1 mph) each time you move the lever down in this manner.
- You can set the speed to 30 km/h (20 mph).

To temporarily accelerate with the smart cruise control on

If you want to speed up temporarily when the Smart Cruise Control is on, depress the accelerator pedal.
Increased speed will not interfere with Smart Cruise Control operation or change the set speed.
To return to the set speed, take your foot off the accelerator pedal.
If you push the lever down (SET-) at increased speed, the cruising speed will be set again pedal.

✻ NOTICE

Be careful when accelerating temporarily, because the speed is not controlled automatically at this time even if there is a vehicle in front of you.

Smart cruise control will be temporarily canceled when:

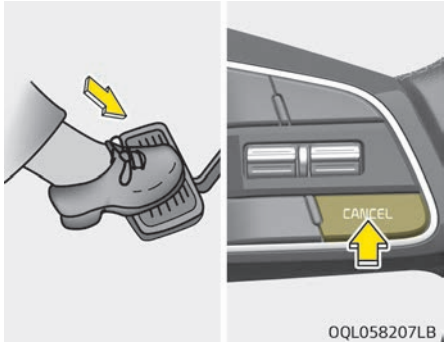

Cancelled manually

- Depressing the brake pedal.
- Pressing the button located on the steering wheel.
- Depress the brake pedal and press the button at the same time when the vehicle is at a standstill.

The Smart Cruise Control turns off temporarily when the Set Speed and Vehicle-to-Vehicle Distance indicator on the LCD display turns off. The CRUISE indicator is illuminated continuously.

Cancelled automatically

- The driver's door is opened.
- The shift lever is shifted to N (Neutral), R (Reverse) or P (Park).
- The EPB (electric parking brake) is applied.
- The vehicle speed is over 190 km/h (120 mph)
- The ESC (Electronic Stability Control), TCS (Traction Control System) or ABS is operating.
- The ESC is turned off.
- The sensor or the cover is dirty or blocked with foreign matter.
- The vehicle is stopped for a certain period of time.
- The vehicle stops and goes repeatedly for a long period of time.
- The accelerator pedal is continuously depressed for a long period of time.
- The engine performance is abnormal.
- The engine speed is in dangerous range.
- When engine is stopped by ISG mode.
- When the braking control is operated for FCA (Forward Collision-Avoidance Assist)
- The driver starts driving by pushing the lever up (RES+)/down (SET-) or depressing the accelerator pedal, after the vehicle is stopped by the Smart Cruise Control System with no other vehicle ahead.
- The driver starts driving by pushing the lever up (RES+)/down (SET-) or depressing the accelerator pedal, after stopping the vehicle with a vehicle stopped far away in front.

Each of these actions will cancel the Smart Cruise Control operation. (The Set Speed and Vehicle-to-Vehicle Distance on the LCD display will go off.)
In a condition the Smart Cruise Control is cancelled automatically, the Smart Cruise Control will not resume even though the RES+ or SET- lever is pushed.

✻ NOTICE

If the Smart Cruise Control is cancelled by other than the reasons mentioned, have the system checked by a professional workshop. Kia recommends to visit an authorized Kia dealer/service partner.

Smart cruise control cancelled

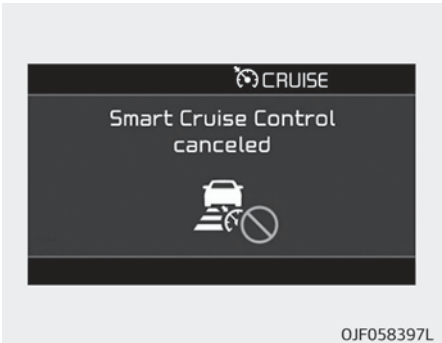

If the system is cancelled, the warning chime will sound and a message will appear for a few seconds.

You must adjust the vehicle speed by depressing the accelerator or brake pedal according to the road condition ahead and driving condition.
Always check the road conditions. Do not rely on the warning chime.

To resume smart cruise control set speed

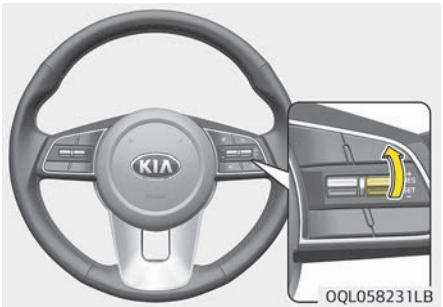

If any method other than the lever was used to cancel cruising speed and the system is still activated, the cruising speed will automatically resume when you push the lever up (RES+) or down (SET-).

If you push the lever up (RES+), the speed will resume to the recently set speed. However, if vehicle speed drops below 30 km/h (20 mph), it will resume when there is a vehicle in front of your vehicle.

✻ NOTICE

Always check the road conditions when you push the lever up (RES+) to resume speed.

To turn cruise control off

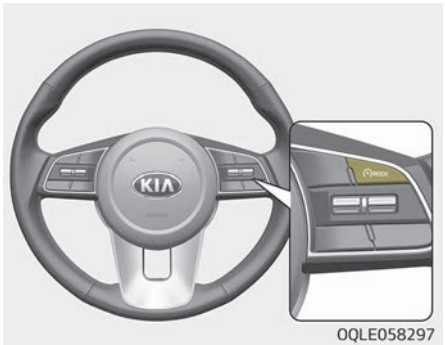

- Press the CRUISE (/MODE) button (The CRUISE indicator (CRUISE) in cluster will go off).
- When the Smart Cruise Control System is not needed, press the CRUISE (/MODE) button and deactivate the system.
- Press the CRUISE (/MODE) button (The CRUISE indicator (CRUISE) indicator light will go off.) (if equipped with Speed Limit Control)
  - With the Smart Cruise Control on, pressing the button once will turn Off the Smart Cruise Control and turn on the Speed Limit Control.
  - With the Smart Cruise Control off and Speed Limit Control on, pressing the button will turn off both system.

✻ NOTICE

The mode changes, as below, whenever the CRUISE (/MODE) button is pressed.

⚠ WARNING

Take the following precautions :

- **Always set the vehicle speed under the speed limit in your country.**
- **If the Smart Cruise Control is left on, (cruise indicator (CRUISE) in cluster is illuminated) the Smart Cruise Control can be activated unintentionally.**
  Keep the Smart Cruise Control System off (cruise indicator (CRUISE) OFF) when the Smart Cruise Control is not in use, to avoid inadvertently setting a speed.
- **Use the Smart Cruise Control System only when traveling on open highways in good weather.**
- **Do not use the Smart Cruise Control when it may not be safe to keep the vehicle at a constant speed :**
  - **When driving in heavy traffic or when traffic conditions make it difficult to drive at a constant speed**

(Continued)

(Continued)

- **When driving on rainy, icy, or snow-covered roads**
- **When driving on hilly or windy roads**
- **When driving in windy areas**
- **When driving in parking lots**
- **When driving near crash barriers**
- **When driving on a sharp curve**
- **When driving with limited view (possibly due to bad weather, such as fog, snow, rain or sandstorm)**
- **When the vehicle sensing ability decreases due to vehicle modification resulting level difference of the vehicle's front and rear**
- **Highway interchange and tollgate**
- **Road surrounded by abnormally multiple steel constructions (subway, construction, steel tunnel, etc.)**

(Continued)

(Continued)

- **Lanes beside guard rail on a road**
- **Abrupt curved road**
- **Steep hills**
- **Off roads.**
- **Roads under construction**
- **Rumble strip**

- **Pay particular attention to the driving conditions whenever using the smart cruise control system.**
- **The smart cruise control system is not a substitute for safe driving. It is the responsibility of the driver to always check the speed and distance of the vehicle ahead.**
- **Be careful when driving downhill using the SCC**
- **Cruise function should not be used when the vehicle is being towed to prevent any damage.**
- **Unexpected situations may lead to possible accidents. Pay attention continuously to road conditions and driving even when the smart cruise control system is being operated.**

Smart cruise control vehicle-to-vehicle distance setting

To set vehicle-to-vehicle distance

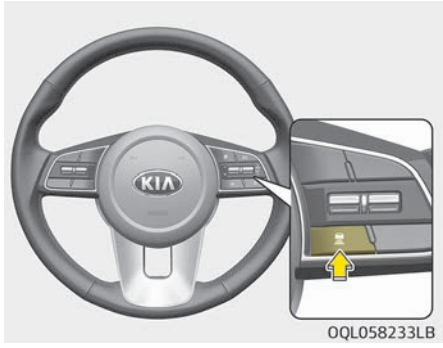

When the Smart Cruise Control System is ON, you can set and maintain the distance from the vehicle ahead of you without pressing the accelerator or brake pedal.
Each time the button is pressed, the vehicle to vehicle distance changes as follows:

Distance 4 → Distance 3 → Distance 2 → Distance 1

For example, if you drive at 90 km/h (56 mph), the distance maintain as follows:
Distance 4 - approximately 52.5 m
Distance 3 - approximately 40 m
Distance 2 - approximately 32.5 m
Distance 1 - approximately 25 m

✻ NOTICE

The distance is set to the last set distance when the system is used for the first time after starting the engine.

When the lane ahead is clear :



The vehicle speed will maintain the set speed.

When there is a vehicle ahead of you in your lane :



- Your vehicle speed will slow down or speed up to maintain the selected distance.
- If the vehicle ahead speeds up, your vehicle will travel at a steady cruising speed after accelerating to the set speed. (A vehicle will appear in front of your vehicle in the LCD display only when there is an actual vehicle in front of you.)
- If distance from the front vehicle has been changed due to accelerating or decelerating of front vehicle, the distance on the LCD may be changed.



⚠ WARNING

When using the Smart Cruise Control System:

- **The warning message appears and warning chime sounds, if the vehicle is unable to maintain the selected distance from the vehicle ahead.**
- **If the warning message appears and warning chime sounds, depress the brake pedal to actively adjust the vehicle speed, and the distance to the vehicle ahead.**
- **Even if the warning message does not appear and warning chime is does not sound, always pay attention to the driving conditions to prevent dangerous situations from occurring.**
- **Playing the vehicle audio system at high volume may offset the system warning sounds.**



OQL058239LB

⚠ CAUTION

If the vehicle ahead (vehicle speed: less than 30 km/h) disappears to the next lane, the warning chime will sound and a message "Watch for surrounding vehicles" will appear. Adjust your vehicle speed for vehicles or objects that can suddenly appear in front of you by depressing the brake pedal.
Always pay attention to the road condition ahead.

In traffic situation



OJF058402L

Use switch or pedal to accelerate

- In traffic, your vehicle will stop if the vehicle ahead of you stops. Also, if the vehicle ahead of you starts moving, your vehicle will start as well. However, if the vehicle stops for more than 3 seconds, you must depress the accelerator pedal or push up the lever (RES+) to start driving.

- If you push the smart cruise control lever (RES+ or SET-) while Auto Hold and smart cruise control is operating the Auto Hold will be released regardless of accelerator pedal operation and the vehicle will start to move. The AUTO HOLD indicator changes from green to white. (if equipped with EPB (Electronic Parking Brake))

Sensor to detect distance to the vehicle ahead



The Smart Cruise Control uses a sensor to detect distance to the vehicle ahead.

If the sensor is covered with dirt or other foreign matter, the vehicle to vehicle distance control may not operate correctly.
Always keep the area in front of the sensor clean.

Warning message

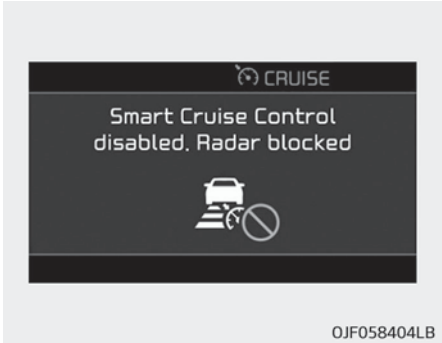

Smart Cruise Control disabled. Radar blocked

When the sensor cover is blocked with dirt, snow, or debris, the Smart Cruise Control System operation may stop temporarily. If this occurs, a warning message will appear on the LCD display. Remove any dirt, snow, or debris and clean the radar cover before operating the Smart Cruise Control system.
The Smart Cruise Control system may not properly activate, if the radar is totally contaminated, or if any substance is not detected after turning ON the engine (e.g. in an open terrain).

⚠ CAUTION

- **Do not apply license plate frame or foreign objects such as a bumper sticker or a bumper guard near the radar sensor. Doing so may adversely affect the sensing performance of the radar.**
- **Always keep the radar sensor and radar cover clean and free of dirt and debris.**
- **Use only a soft cloth to wash the vehicle. Do not spray pressurized water directly on the sensor or sensor cover.**
- **Be careful not to apply unnecessary force on the radar sensor or radar cover.**
  If the sensor is forcibly moved out of proper alignment, the Smart Cruise Control System may not operate correctly. In this case, a warning message may not be displayed.
  Kia recommends to visit an authorized Kia dealer/service partner.

(Continued)

(Continued)

- **If the front bumper becomes damaged in the area around the radar sensor, the Smart Cruise Control System may not operate properly. Kia recommends to visit an authorized Kia dealer/service partner.**
- **Use only genuine Kia parts to repair or replace a damaged sensor or sensor cover. Do not apply paint to the sensor cover.**



Check Smart Cruise Control System

The message will appear when the vehicle to vehicle distance control system is not functioning normally.

In this case, have the system checked by a professional workshop. Kia recommends to visit an authorized Kia dealer/service partner.

✻ NOTICE

For the SCC operation is temporarily stopped if the radar is blocked, but you wish to use cruise control mode (speed control function), you must convert to the cruise control mode (refer to “To convert to Cruise Control mode” on page 6-105).

To adjust the sensitivity of smart cruise control

The sensitivity of vehicle speed when following the forward vehicle to maintain the set distance can be adjusted. Go to the 'User Settings ➟ Driver Assistance ➟ Smart Cruise Control Response ➟ Slow/Normal/Fast' on the LCD display. You may select one of the three stages you prefer.

- Slow:
  Vehicle speed following the front vehicle to maintain the set distance is slower than normal speed.

- Normal:
  Vehicle speed following the front vehicle to maintain the set distance is normal.
- Fast:
  Vehicle speed following the front vehicle to maintain the set distance is faster than normal speed.

✻ NOTICE

The last selected smart cruise control sensitivity is remained in the system.

To convert to cruise control mode

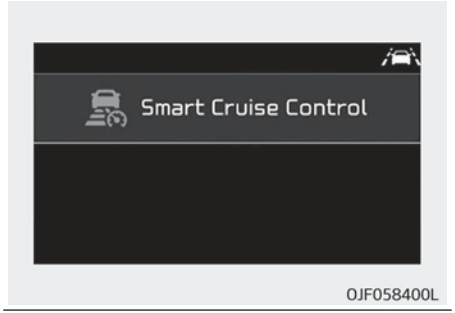

OJF058400L

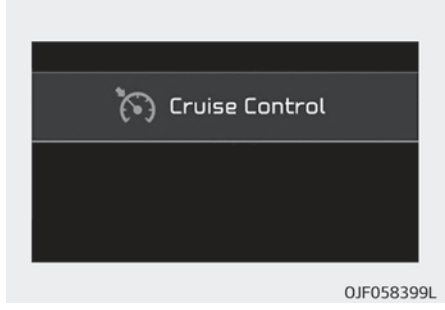

OJF058399L

The driver may choose to only use the Cruise Control mode (speed control function) by doing as follows:

1. Turn the Smart Cruise Control System on (the cruise indicator (CRUISE) light will be on but the system will not be activated).
2. Push and hold the Vehicle-to-Vehicle Distance button for more than 2 seconds.
3. Choose between "Smart Cruise Control" and "Cruise Control". When the system is canceled using the CRUISE (/MODE) button or the CRUISE (/MODE) button is used after the engine is turned on, the Smart Cruise Control mode will turn on.

⚠ WARNING

When using the Cruise Control mode, you must manually adjust the distance to other vehicles by depressing the brake pedal. The system does not automatically adjust the distance to vehicles in front of you.

Limitations of the system

The smart cruise control system may have limits to its ability to detect distance to the vehicle ahead due to road and traffic conditions.

On curves

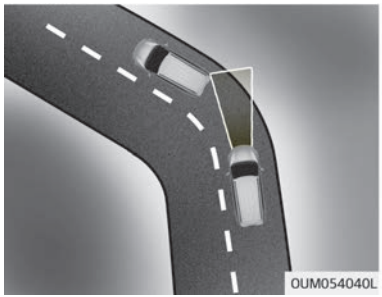

- The Smart Cruise Control System may not detect a moving vehicle in your lane, and then your vehicle could accelerate to the set speed. Also, the vehicle speed will decrease when the vehicle ahead is recognized suddenly.
- Select the appropriate set speed on curves and apply the brakes if necessary.
  Check to be sure that the road conditions permit safe operation of the Smart Cruise Control.



- Your vehicle speed can be reduced due to a vehicle in the adjacent lane.
  Apply the accelerator pedal and select the appropriate set speed if needed. Check to be sure that the road conditions permit safe operation of the Smart Cruise Control.

On inclines

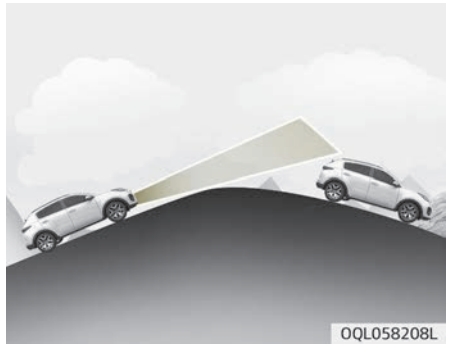

- During uphill or downhill driving, the Smart Cruise Control System may not detect a moving vehicle in your lane, and cause your vehicle to accelerate to the set speed. Also, the vehicle speed will rapidly decrease when the vehicle ahead is recognized suddenly.
- Select the appropriate set speed on inclines and adjust your vehicle speed by applying the brake or accelerator pedal if necessary. Check to be sure that the road conditions permit safe operation of the Smart Cruise Control.

Lane changing

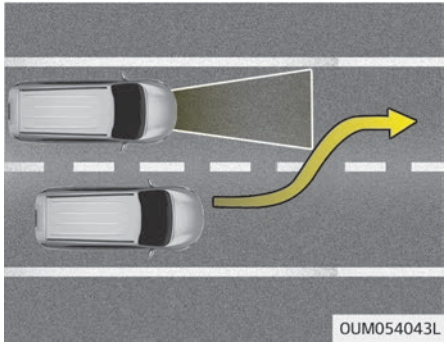

- A vehicle which moves into your lane from an adjacent lane cannot be recognized by the sensor until it is in the sensor's detection range.
- The sensor may not detect immediately when a vehicle cuts in suddenly. Always pay attention to the traffic, road and driving conditions.
- If a slower vehicle moves into your lane, your speed may decrease to maintain the distance to the vehicle ahead.
- If a faster vehicle which moves into your lane, your vehicle will accelerate to the set speed.

Vehicle recognition

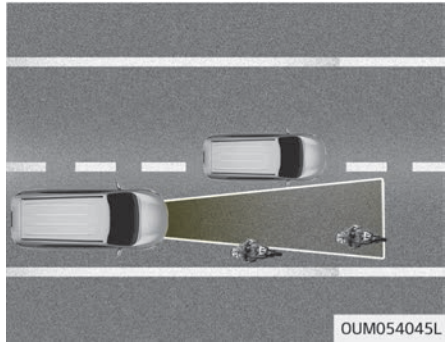

- Some vehicles in your lane cannot be recognized by the sensor:
  - Narrow vehicles such as motorcycles or bicycles
  - Vehicles offset to one side
  - Slow-moving vehicles or sudden-decelerating vehicles
  - Stopped vehicles
  - Vehicles with small rear profile such as trailers with no loads

A vehicle ahead cannot be recognized correctly by the sensor if any of following occurs:

- When the vehicle is pointing upwards due to overloading in the luggage compartment
- While the steering wheel is operating When driving to one side of the lane
- When driving on narrow lanes or on curves

Adjust your vehicle speed by applying the brake or accelerator pedal if necessary. Check to be sure that the road conditions permit safe operation of the Smart Cruise Control.

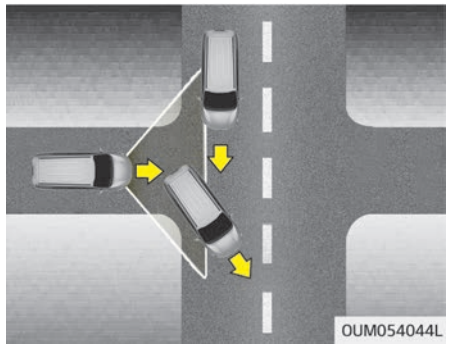

- Your vehicle may accelerate when a vehicle ahead of you disappears on crossroad.

- When you are warned that the vehicle ahead of you is not detected, drive with caution.

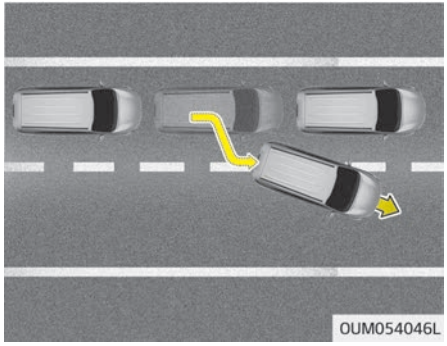

- When driving in stop-and-go traffic, and a stopped vehicle in front of you merges out of the lane, the system may not immediately detect the new vehicle that is now in front of you.
  In this case, you must maintain a safe braking distance, and if necessary, depress the brake pedal to reduce your driving speed in order to maintain a safe distance.

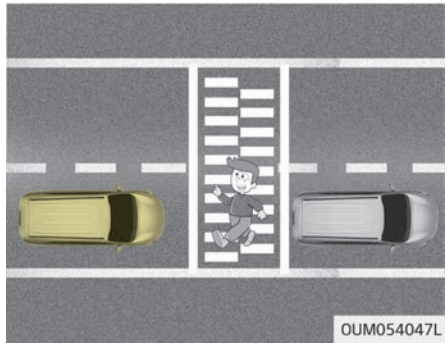

- Always look out for pedestrians when your vehicle is maintaining a distance with the vehicle ahead.



- Always be cautious for vehicles with higher height or vehicles carrying loads that sticks out from the back of the vehicle.

⚠ WARNING

When using the Smart Cruise Control take the following precautions:

- **If an emergency stop is necessary, you must apply the brakes. The vehicle cannot be stopped at every emergency situation by using the Smart Cruise Control System.**
- **Keep a safe distance according to road conditions and vehicle speed. If the vehicle to vehicle distance is too close during a high-speed driving, a serious collision may result.**
- **Always maintain sufficient braking distance and decelerate your vehicle by applying the brakes if necessary.**
- **The Smart Cruise Control System cannot recognize a stopped vehicle, pedestrians or an oncoming vehicle.**
  Always look ahead cautiously to prevent unexpected and sudden situations from occurring.

(Continued)

(Continued)

- **When other vehicles are changing lanes in front of you frequently, the Smart Cruise Control system may not operate appropriately. Always drive cautiously to prevent unexpected and sudden situations from occurring.**
- **The smart cruise control system is not a substitute for safe driving practices but a convenience function only. It is the responsibility of the driver to always check to the vehicle ahead.**
- **Always be aware of the selected speed and distance to the vehicle ahead.**
- **The Smart Cruise Control System may not recognize complex driving situations, always pay attention to driving conditions and control your vehicle speed.**
- **After an engine start, please stop for several seconds. If system initialization is not completed, the SCC does not normally operate.**

(Continued)

(Continued)

- **After an engine start, if any objects are not detected or the sensor cover is obscured with foreign substances, there is a possibility that the SCC system may not work.**
- **Below conditions are not allowed: over baggage loading in a trunk (tailgate), suspension remodeling, tire replacement with unauthorized tires or tires with different worn-out and pressure levels.**

✻ NOTICE

The Smart Cruise Control System may not operate temporarily due to Electromagnetic interference.

⚠ CAUTION

For safe operation, carefully read and follow the instructions in this manual before use.

DRIVE MODE INTEGRATED CONTROL SYSTEM (IF EQUIPPED)

DRIVE mode

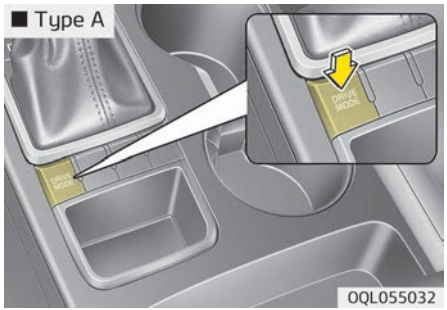

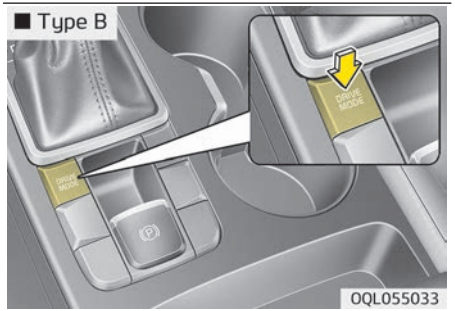

The drive mode may be selected according to the driver's preference or road condition.
The mode changes whenever the DRIVE MODE button is pressed.



❋ When normal mode is selected, it is not displayed on the cluster.

ECO mode (Active ECO)

ECO

Active ECO helps improve fuel efficiency by controlling certain engine and transaxle system operating parameters. Fuel efficiency depends on the driver's driving habit and road condition.

- When the DRIVE MODE button is pressed and the ECO mode is selected, the ECO indicator (green) will illuminate to show that the Active ECO is operating.
- When the Active ECO is activated, it does not turn off even though the engine is restarted again. To turn off the system, press the DRIVE MODE button again.

When Active ECO is activated:

- The acceleration may slightly be reduced eventhough you depress the accelerator fully.
- The air conditioner performance may be limited
- The shift pattern of the automatic transaxle may change.
- The engine noise may get louder.

The above situations are normal conditions when the active eco system is activated to improve fuel efficiency.

Limitation of Active ECO operation:

If the following conditions occur while Active ECO is operating, the system operation is limited even though there is no change in the ECO indicator.

- When the coolant temperature is low:
  The system will be limited until engine performance becomes normal.
- When driving up a hill:
  The system will be limited to gain power when driving uphill because the engine torque is restricted.
- When using manual mode:
  The system will be limited according to the shift location.

- When the accelerator pedal is deeply depressed for a few seconds:
  The system will be limited, judging that the driver wants to speed up.

SPORT mode

SPORT

SPORT mode focuses on dynamic driving by automatically controlling the steering wheel, engine and transaxle system.

- When the DRIVE MODE button is pressed and the SPORT mode is selected, the SPORT indicator (yellow) will illuminate.
- When the SPORT mode is activated, and the engine start/stop button is turned off and on it will change to NORMAL mode. To turn on the SPORT mode press DRIVE MODE button again.
- If the system is activated:
  - After speeding, it maintains the gear and RPM for some time even though the accelerator pedal is not depressed.
  - Up-shifting is delayed.

✻ NOTICE

In Sport drive mode, the fuel efficiency may decrease.

LANE KEEPING ASSIST (LKA) SYSTEM (IF EQUIPPED)

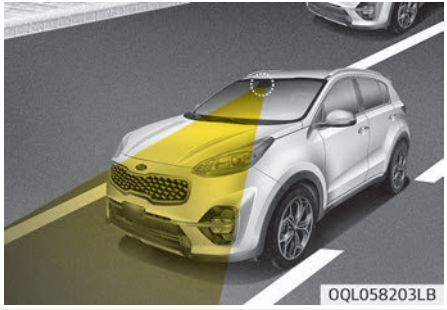



The Lane Keeping Assist (LKA) system detects the lane markers on the road with a front view camera at the front windshield, and assists the driver's steering to help keep the vehicle in the lanes.

When the system detects the vehicle straying from its lane, it alerts the driver with a visual and audible warning, while applying a slight countersteering torque, trying to prevent the vehicle from moving out of its lane.

⚠ WARNING

- **Driver is responsible for being aware of surroundings and steering the vehicle for safe driving practices.**
- **Do not steer the steering wheel suddenly when the steering wheel is being assisted by the system.**
- **LKA system helps prevent the driver from moving out of the lane unintentionally by assisting the driver's steering. However, the system is just a convenience function and the steering wheel is not always controlled. While driving, the driver should pay attention to the steering wheel.**

(Continued)

(Continued)

- **The operation of the LKA system can be canceled or not work properly according to road condition and surroundings. Always be cautious when driving.**
- **Do not disassemble a front view camera temporarily for tinted window or attaching any types of coatings and accesorsories.**
  If you disassemble the camera and assemble it again, take your vehicle to an authorized Kia dealer and have the system checked to need a calibration.
- **When you replace the windshield glass, front view camera or related parts of the steering, take your vehicle to an authorized Kia dealer and have the system checked to need a calibration.**
- **The system detects lane markers and controls the steering wheel by a front view camera, therefore, if the lane markers are hard to detect, the system may not work properly. Always be cautious when using the system.**

(Continued)

(Continued)

- **When the lane markers are hard to detect, please refer to "Driver's Attention" on page 6-117.**
- **Do not remove or damage the related parts of LKA system.**
- **Do not place objects on the crash pad that reflects light such as mirrors, white paper, etc. it may cause malfunction of LKA system if the sunlight is reflected.**
- **You may not hear warning sound of LKA system because of the excessive audio sound.**
- **While other beeps such as the seat belt warning sound are in operation and override the LKA alarming system, LKA beeps may not occur.**
- **If you continue to drive with your hands off the steering wheel, the LKA system will stop controlling the steering wheel after the hands off alarm. After then, if you drive with your hands on the steering wheel, the control will be activated again.**

(Continued)

(Continued)

- **If the vehicle speed is high, steering torque for assistance will not be enough to keep your vehicle within the lane. If so, the vehicle may move out of its lane. Obey speed limit when using LKA system.**
- **If you attach objects to the steering wheel, the system may not assist steering.**
- **If you attach objects to the steering wheel, hands off alarm may not work properly.**

LKA system operation

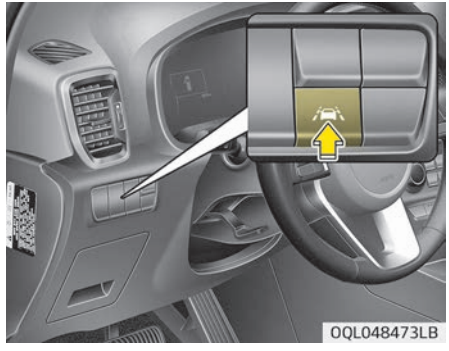

To activate/deactivate the LKA system:
With the ignition switch in the ON position, press the LKA system button located on the instrument panel on the lower left hand side of the driver.
The indicator in the cluster display will initially illuminate white.
When the indicator(white) activated in the previous ignition cycle, the system turns on without any control.
If you press the LKA system button again, the indicator on the cluster display will go off.
The color of indicator will change depend on the condition of LKA system.

– White : Sensor does not detect the lane marker or vehicle speed is less than 60 km/h.

– Green : Sensor detects the lane marker and system is able to control the steering.

LKA system activation

- To see the LKA system screen on the LCD display in the cluster, Tab to the ASSIST mode ( ).
- For further details, refer to [menu settings] in “Assist Mode” on page 4-62, [crash pad].
- After LKA system is activated, if a lane marker is detected, vehicle speed is over 60 km/h and all the activation conditions are satisfied, a green indicator will illuminate and the steering wheel will be controlled.

⚠ WARNING

The Lane Keeping Assist System is a system to help prevent the driver from leaving the lane. However, the driver should not solely rely on the system but always check the road conditions when driving.

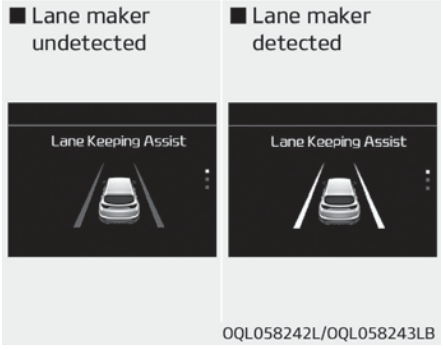

If the speed of the vehicle is over 60 km/h and the system detects the lane marker, the color changes from gray to white
When the conditions below are met, LKA system will be enable to assist steering.

- Vehicle speed is above 60 km/h.
- Lane marker (one or both side) is detected by LKA system.

If LKA system can assist steering, a green steering wheel indicator will illuminate.

Warning

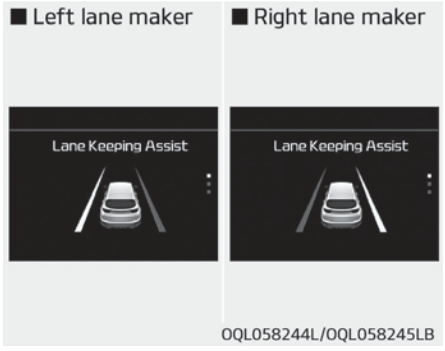

- If the vehicle leaves a lane, the lane marker you cross will blink on the LCD display.
  If the vehicle moves out its lane because steering torque for assistance is not enough, the line indicator of deviation direction will blink.

- If all the conditions to activate LKA system is not satisfied, the system will convert to LDW and warn the driver only when the driver crosses the lane marker.

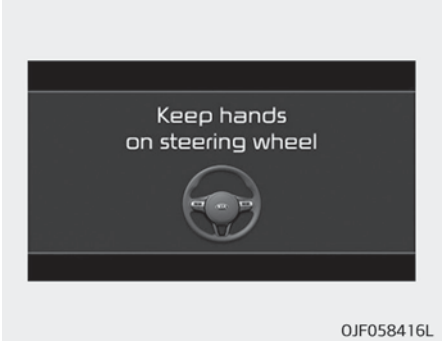

OJF058416L

If the driver takes hands off the steering wheel for several seconds while the LKA is activated, the system will warn the driver.

⚠ WARNING

- **The warning message may appear late according to road conditions. Therefore, always have your hands on the steering wheel while driving.**

(Continued)

(Continued)

- **If you hold the steering wheel lightly, the system would generate hands off warning because LKA system can treat the situation as you do not grab the wheel.**

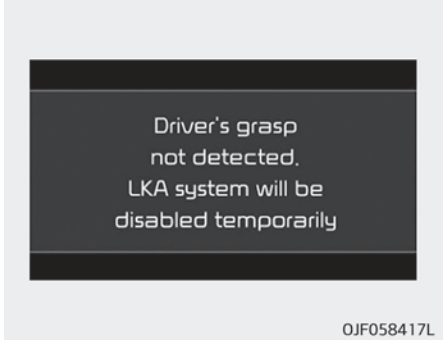

OJF058417L

If the driver still does not have their hands on the steering wheel after several seconds, the system will not control the steering wheel and warn the driver only when the driver crosses the lane markers.
However, if the driver has their hands on the steering wheel again, the system will start controlling the steering wheel.

⚠ WARNING

- **The driver is responsible for accurate steering.**
- **Even though the steering is assisted by the system, the driver may control the steering wheel.**
- **Turn off the system and drive the vehicle in below situations.**
  - **In bad weather**
  - **In bad road condition**
  - **When the steering wheel needs to be controlled by the driver frequently.**
- **The steering wheel may feel heavier when the steering wheel is assisted by the system than when it is not.**

LKA system malfunction

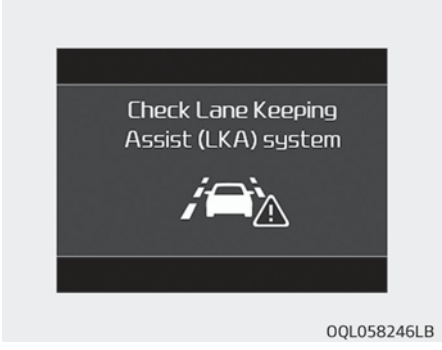

- If there is a problem with the system a message will appear. If the problem continues the LKA system fail indicator will illuminate.

LKA system fail indicator

The LKA system fail indicator (yellow) will illuminate with an audible warning if the LKA system is not working properly. In this case, have the system checked by a professional workshop. Kia recommends to visit an authorized Kia dealer/service partner.

When there is a problem with the system do one of the following:

- Turn the system on after turning the engine off and on again.
- Check if the ignition switch is in the ON position.
- Check if the system is affected by the weather. (ex: fog, heavy rain, etc.)
- Check if there is foreign matter on the camera lens

If the problem is not solved, have the system checked by a professional workshop. Kia recommends to visit an authorized Kia dealer/service partner.

The system will be canceled when:

- You change lanes with the turn signal.
  - Using the turn signal to change lanes.
  - If you change lanes without the turn signal on, the steering wheel might be controlled.
- LKA system can transit to steering assist mode when the car is near to middle of the lane after system on or the lane was changed. LKA system can not assist steering if the vehicle follows lane marker too close continuously before transition to steering assist mode.
- The control of ESC (Electronic Stability Control) or VSM (Vehicle Stability Management) is activated.
- The steering will not be assisted when your drive fast on a sharp curve.
- The steering will not be assisted when vehicle speed is below 60 km/h and over 180 km/h.
- The steering will not be assisted when you change lanes fast.
- The steering will not be assisted when you brake suddenly.
- The steering will not be assisted when the lane is very wide or narrow.
- The steering will not be assisted when only one side lane marker is detected.
- There are more than two lane markers such as a construction area.
- Radius of a curve is too small.

- When you turn steering wheel suddenly, the LKA system will be disabled temporarily.
- Driving on a steep slope or hill.

Driver's attention

The driver must be cautious in the below situations may not work properly when recognition of the lane marker is poor or limited :

When lane and road condition is poor

- It is difficult to distinguish the lane marker from road when the lane marker is covered with dust or sand.
- It is difficult to distinguish the color of the lane marker from road.
- There is something looks like a lane marker.
- The lane marker is indistinct or damaged.
- The number of lanes increases/decreases or the lane lines are crossing (Driving through a toll plaza/toll gate, merged/divided lane).
- There are more than two lane markers.
- The lane marker is very thick or thin.
- The lane marker is not visible due to snow, rain, stain, a puddle or other factors.
- A shadow is on the lane marker because of a median strip, guardrail, noise barriers and others.
- When the lane markers are complicated or a structure substitutes for the lines such as a construction area.
- There are crosswalk signs or other symbols on the road.
- The lane suddenly disappears such as at the intersection.
- The lane marker in a tunnel is covered with dirt or oil and etc.
- The lane is very wide or narrow.

When external condition is intervened

- The brightness of outside changes suddenly when entering/existing a tunnel or passing under a bridge.
- The headlamps are not on at night or in a tunnel, or light level is low.
- There is a boundary structure in the roadway.
- The light of street, sun, oncoming vehicle and so on reflects from the water on the road.
- When light shines brightly in the reverse direction you drive.
- The distance from the vehicle ahead is very short or the vehicle ahead drives hiding the lane line.
- You drive on a steep grade or a sharp curve.
- The vehicle vibrates heavily.
- The temperature near inside mirror is very high due to direct sun light and etc.

when front visibility is poor

- The lens or windshield is covered by strange materials.
- The sensor cannot detect the lane because of fog, heavy rain or snow.
- The windshield is fogged by humid air in the vehicle.
- Putting something on the crash pad and etc.

⚠ WARNING

The Lane Keeping Assist System is a system to help prevent the driver
(Continued)

(Continued)

from leaving the lane. However, the driver should not solely rely on the system but always take the necessary actions for safe driving practices.

LKA system function change

The driver can change LKA to Lane Departure Warning (LDW) system or vice versa from the User Settings Mode on the LCD display. Go to the 'User Settings ➡ Driving Assist ➡ Lane safety ➡ Lane Keeping Assist/ Lane Departure Warning (LDW)'.

Lane Departure Warning

LDWS alerts the driver with a visual and haptic warning when the system detects the vehicle leaving the lane. In this mode, the steering wheel will not be controlled. When the vehicle's front wheel contacts the inside edge of lane line, LKA issues the lane departure warning.

ISG (IDLE STOP AND GO) SYSTEM (IF EQUIPPED, FOR BRAZIL)

Your vehicle may be equipped with the ISG system, which reduces fuel consumption by automatically shutting down the engine, when the vehicle is at a standstill. (For example: red light, stop sign and traffic jam)
The engine starts automatically as soon as the starting conditions are met.
The ISG system is ON whenever the engine is running.

✻ NOTICE

When the engine automatically starts by the ISG system, some warning lights (ABS, ESC, ESC OFF, EPS or Parking brake warning light) may turn on for a few seconds.
This happens because of low battery voltage. It does not mean the system has malfunctioned.

Auto stop

To stop the engine in idle stop mode



With manual transaxle

1. Decrease the vehicle speed to less than 5 km/h (3 mph).
2. Shift into N (Neutral) position.
3. Release the clutch pedal.

With automatic transaxle

1. Decrease the vehicle speed to 0 km/h.
2. Shift at D (Drive) / N (Neutral) position.
3. Press the brake pedal.

The engine will stop and the green AUTO STOP(Ⓐ) indicator on the instrument cluster will illuminate.

✻ NOTICE

- You must reach a speed of at least 5km/h (3 mph) since last idle stop. (With manual transaxle)
- You must reach a speed of at least 5km/h (3 mph) since last idle stop. (With automatic transaxle)



✻ NOTICE

If you open the engine hood in auto stop mode, the following will happen (With automatic transaxle):

- The ISG system will deactivate (the light on the ISG OFF button will illuminate).

Auto start

To restart the engine from idle stop mode

With manual transaxle

- Press the clutch pedal when the shift lever is in the N (Neutral) position.
- A message "Press clutch pedal for Auto Start" will appear on the LCD display.
- The engine will start and the green AUTO STOP (Ⓐ) indicator on the instrument cluster will go out.

With automatic transaxle

- Release the brake pedal.
  or
- When AUTO HOLD is operating, if you release the brake pedal, the engine keeps the stop state. But if you press the accelerator pedal, the engine will start again.

The engine will start and the green AUTO STOP indicator (Ⓐ) on the instrument cluster will go out.

The engine will also restart automatically without the driver's any actions if the following occurs:

- The fan speed of manual climate control system is set above the 3rd position when the air conditioning is on.
- The fan speed of automatic climate control system is set above the 5th position when the air conditioning is on.
- When a certain amount of time has passed with the climate control system on.
- When the defroster is on.
- The brake vacuum pressure is low.
- The battery charging status is low.
- The vehicle speed exceeds 6 km/h (4 mph). (With manual transaxle)
- The vehicle speed exceeds 1.5 km/h (1 mph). (With automatic transaxle)
- You shift the gear to P (park) position or you press the EPB switch in the AUTO HOLD state. (With automatic transaxle)

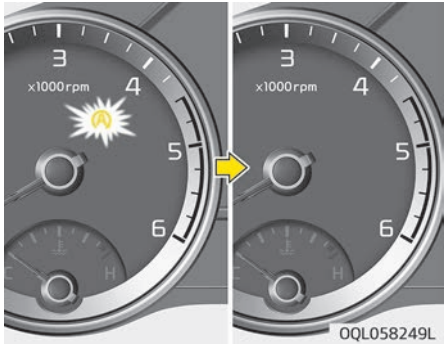

The green AUTO STOP (Ⓐ) indicator on the instrument cluster will blink.

Condition of ISG system operation

The ISG system will operate under the following conditions:

- The driver's seat belt is fastened.
- The driver's door and engine hood are closed.

- The brake vacuum pressure is adequate.
- The battery is sufficiently charged.
- The outside temperature is between -10 °C to 50 °C (-4 °F to 122 °F).
- The engine coolant temperature is not too low.
- The slope way is gentle. (With automatic transaxle)

✻ NOTICE

- If the ISG system does not meet the operation condition, the ISG system is deactivated. The light on the ISG OFF button will illuminate and the yellow AUTO STOP (Ⓐ) indicator on the instrument cluster will illuminate.
- If the light comes on continuously, please check the operation condition.

ISG system deactivation



- If you wish to deactivate the ISG system, press the ISG OFF button. The light on the ISG OFF button will illuminate.
- If you press the ISG OFF button again, the system will be activated and the light on the ISG OFF button will turn off.

ISG system malfunction

The system may not operate when:



The ISG related sensors or system error occurs.
The following will happen:

- The yellow AUTO STOP (Ⓐ) indicator on the instrument cluster will stay on after blinking for 5 seconds.
- The light on the ISG OFF button will illuminate.

✻ NOTICE

- If the ISG OFF button light is not turned off by pressing the ISG OFF button again or if the ISG system continuously does not work correctly, have your vehicle inspected by a professional workshop as soon as possible.
  Kia recommends to contact an authorized Kia dealer/service partner.
- When the ISG OFF button light comes on, it may stop illuminating after driving your vehicle at approximately 80 km/h for a maximum of two hours and setting the fan speed control knob below the 2nd position. If the ISG OFF button light continues to be illuminated in spite of the procedure, have your vehicle inspected by a professional workshop as soon as possible. Kia recommends to contact an authorized Kia dealer/service partner.

⚠ WARNING

When the engine is in Idle Stop mode, it's possible to restart the engine without the driver taking any action.
Before leaving the car or doing anything in the engine room area, stop the engine by turning the ignition switch to the LOCK/OFF position or removing the ignition key.

✻ NOTICE

If the AGM battery is reconnected or replaced, ISG function will not operate immediately.
If you want to use the ISG function, the battery sensor needs to be calibrated for approximately 4 hours with the ignition off and then, turn the engine on and off 2 or 3 times.

BLIND SPOT COLLISION WARNING (BCW) / REAR CROSS-TRAFFIC COLLISION WARNING (RCCW) (IF EQUIPPED)

Blind-spot Collision Warning (BCW)

The BCW (Blind-Spot Collision Warning) system uses radar sensors in the rear bumper. The sensors monitor a closing vehicle with high speed or a vehicle in driver's blind spot area and alert the driver of while driving.

- Blind-Spot Area

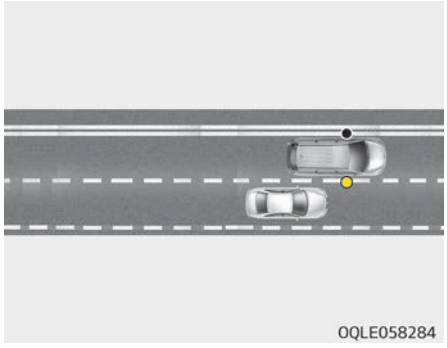

The warning range is dependent on your vehicle speed.
Note that if your vehicle is traveling much faster than other nearby vehicles, the warning is not occur.

- Lane Change Assist

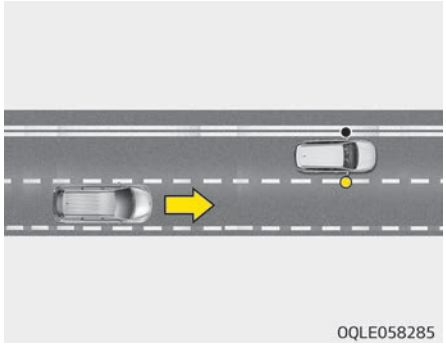

When the vehicles are approaching to your vehicle at high speed, the warning message is occur.
Distance from the approaching vehicle can be seen differently according to the relative speed.

⚠ WARNING

- **Unexpected situations may lead to possible accidents. Pay attention continuously to road conditions and driving even when the Blind-Spot Collision Warning is being operated.**
- **The Blind-Spot Collision Warning system is a supplemental convenience system to assist driving. The system is not a substitute for proper and safe driving. It is the responsibility of the driver to always check to the vehicle around. Do not solely rely on the system, but always pay attention to drive safely.**
- **The Blind-Spot Collision Warning (BCW) system may not detect every object around your vehicle.**

System setting and activation

System setting



To operate:

Press the BCW switch with the Ignition switch in the ON position. The indicator on the BCW switch will illuminate.

To cancel:

Press the BCW switch again. The indicator on the switch will go off.
When the system is not used, turn the system off by turning off the switch.

✻ NOTICE

- If the vehicle is turned off then on again, the BCW system returns to the previous state.
- When the system is turned on, the warning light will illuminate for 3 seconds on the outside rearview mirror.

The system will activate when:

1. The BCW system is on.
2. The vehicle speed is above about 30 km/h (20 mph).
3. Other vehicles are detected in rear side.

Warning indicator and sound

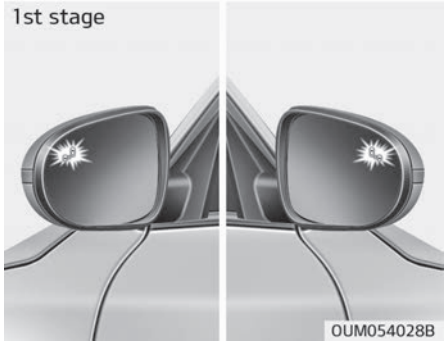

First stage alert

If a vehicle is detected within the boundary of the system, a yellow warning light will illuminate on the outside rearview mirror.
If the detected vehicle is not in detection range, the warning will be turned off according to the driving conditions of the vehicle.

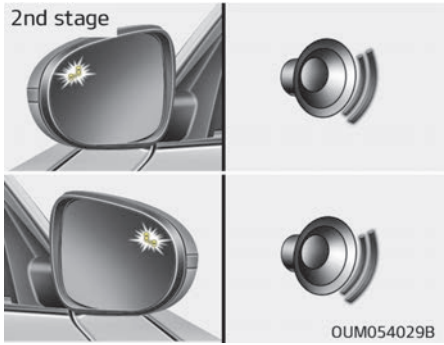

Second stage alert

A warning alarm to alert the driver will activate when:

1. A vehicle has been detected in the blind spot area by the radar system (the warning light will illuminate on the outside rearview mirror (i.e., in the first stage alert) AND
2. The turn signal is on to change a lane (same side as where the vehicle is being detected)

When the second stage alert is activated, the warning light on the outside rearview mirror will also blink.

If you move the turn signal switch to origin position, the second stage alert (the warning chime and the blinking warning light on the outside rearview mirror) will be deactivated.
If the detected vehicle is not in detection range, the warning will be turned off according to the driving conditions of the vehicle.

⚠ CAUTION

- **The driver should always use extreme caution while operating the vehicle, whether or not the warning light on the outside rearview mirror illuminates or there is a warning alarm.**
- **Playing the vehicle audio system at high volume may offset the Blind-Spot Collision Warning System warning sounds.**
- **The warning of the Blind-Spot Collision Warning System may not sound while other system's warning sounds.**

⚠ WARNING

- **The warning light on the outside rearview mirror will illuminate whenever a vehicle is detected at the rear side by the system. To avoid accidents, do not focus only on the warning light and neglect to see the surrounding of the vehicle.**
- **Drive safely even though the vehicle is equipped with a Blind-Spot Collision Warning System (BCW). Do not solely rely on the system but check your surrounding before changing lanes or backing the vehicle up. The Blind-Spot Collision Warning system (BCW) may not detect every object alongside the vehicle.**
- **The system may not alert the driver in some conditions so always check your surroundings while driving.**

Rear Cross-Traffic Collision Warning (RCCW)

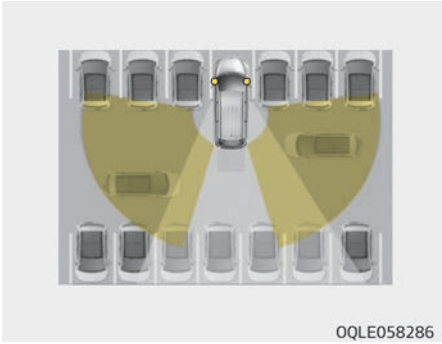

When your vehicle moves backwards from a parking position, the RCCW system detects approaching cross traffic from the left and right side of the vehicle and warns to driver.
The blind spot detection range varies relative to the approaching vehicle speed.

⚠ WARNING

- **Always be aware of road conditions while driving and be alert for unexpected situations even though the Rear Cross-Traffic Collision Warning System is operating.**
- **The Rear Cross-Traffic Collision Warning System is supplemental systems to assist you. Do not entirely rely on the systems. Always pay attention, while driving, for your safety.**
- **The Rear Cross-Traffic Collision Warning System is not substitutes for proper and safe driving. Always drive safely and use caution when backing up the vehicle.**

System setting and activation

System setting

To operate:
Go to the 'User Settings ➡ Driver Assistance and select Rear Cross-Traffic Collision Warning ' on the LCD display.
The system will turn on and standby to activate. If you turn off the preference, it stops operating (For more information, refer to “LCD Display” on page 4-61.)

To cancel:
Select Driving Assist and select Rear Cross-Traffic Collision Warning ' again, to turn the system off.
When the system is not used, turn the RCCW system off.

✻ NOTICE

- If the vehicle is turned off then on again, the RCCW system returns to the previous state.
- When the system is turned on, the warning light will illuminate for 3 seconds on the outside rearview mirror.

The system will activate when:

1. The RCCW system is on.
2. The vehicle speed is below 10 km/h (6 mph) with the shift lever in R (Reverse).
3. Other vehicles are detected in Rear Cross-Traffic Collision Warning Range.

Warning indicator and sound

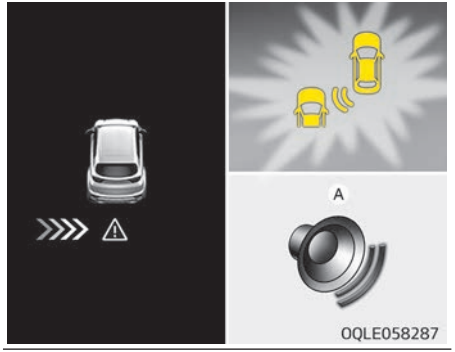

If the vehicle detected by the sensors approaches from the rear left/right side of your vehicle, the warning chime will sound, the warning light on the outside rearview mirror will blink and a message will appear on the LCD display.

The warning will stop when:

- The vehicle moving at the rear left/right side of your vehicle is not in the detection range.
- The vehicle is right behind your vehicle.
- The vehicle is not driving towards your vehicle.
- The vehicle's approaching speed is decreased.

⚠ CAUTION

- **If the operating conditions of RCCW are satisfied, a warning is issued every time the vehicle comes to the rear side, even if it is in a stationary state (vehicle speed 0 km/h).**

(Continued)

(Continued)

- **The system's warning or brake may not operate properly if the left/right of your vehicle's rear bumper is blocked by a vehicle or obstacle.**
- **The driver should always use extreme caution while operating the vehicle, whether or not the warning light on the outside rearview mirror illuminates or there is a warning alarm.**
- **Playing the vehicle audio system at high volume may offset the system's warning sounds.**
- **The warning of the Rear Cross-Traffic Collision Warning System may not sound while other system's warning sounds.**

⚠ WARNING

- **Drive safely even though the vehicle is equipped with a Rear Cross-Traffic Collision Warning (RCCW) System. Do not solely rely on the system but check your surrounding when backing the vehicle up. The RCCW system may not detect every object alongside the vehicle.**
- **The driver is responsible for accurate brake control.**
- **Always pay extreme caution while driving. The Rear Cross-Traffic Collision Warning System may not operate properly or unnecessarily operate in accordance with your driving situations.**

Sensor to detect rear / side range



The sensors are located inside the rear bumper for detecting rear / side areas. Always keep the rear bumper clean for proper operation of the system.

⚠ CAUTION

- **The system may not work properly when the bumper has been damaged, or if the rear bumper has been replaced or repaired.**

(Continued)

(Continued)

- **The sensing range differs somewhat according to the width of the road. When the road is narrow, the system may detect and alert to other vehicles in the next lane.**
- **On the contrary, on wide roads, the system may not be able to detect an automobile that is driving on both lanes and may not be able to alert.**
- **The system may turn off due to strong electromagnetic interference.**
- **Always keep the sensors and bumpers near the sensor clean.**
- **Never arbitrarily disassemble the sensor component nor apply any impact on the sensor component.**
- **Be careful not to apply unnecessary force on the radar sensors or bumpers near the sensor.**

(Continued)

(Continued)

If the sensor is forcibly moved out of proper alignment, the system may not operate correctly. In this case, have the system checked by a professional workshop. Kia recommends to visit an authorized Kia dealer/service partner.

- **Do not apply foreign objects such as a bumper sticker or a bumper guard near the radar sensor or apply paint to the sensor area. Doing so may adversely affect the performance of the sensor.**

Warning message

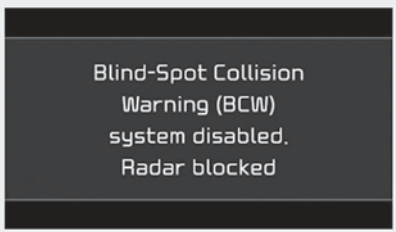

OJF058433L

Blind-Spot Collision Warning disabled. Radar blocked.

- The BCW does not operate
  - One or both of the sensors on the rear bumper is blocked by dirt or snow or a foreign object.
  - Driving in rural areas where the sensors does not detect another vehicle for an extended period of time.
  - When there is inclement weather such as heavy snow or rain.
  - A trailer or carrier is installed. (To use the BCW system, remove the trailer or carrier from your vehicle.)

If any of these conditions occur, the light on the BCW switch and the system will turn off automatically. When the BCW canceled warning message is displayed in the cluster, check to make sure that the rear bumper is free from any dirt or snow in the areas where the sensor is located. Remove any dirt, snow, or foreign material that could interfere with the radar sensors. After any dirt or debris is removed, the BCW & RCCA system should operate normally after about 10 minutes of driving the vehicle.

If the system still does not operate Normally, have the system checked by a professional workshop. Kia recommends to visit an authorized Kia dealer/service partner.

When using the luggage compartment and other equipment, turn off all functions of BCW and RCCW. (BCW button OFF or 'User Settings ➟ Driver assistance and select Rear Cross-Traffic Collision Warning ' OFF)

To use the BCW and RCCW system, remove the luggage compartment and other equipment.



OJF058435LB

Check Blind-Spot Collision Warning (BCW) system

If there is a problem with the BCW system, a warning message will appear and the light on the switch will turn off. The system will turn off automatically. BCW and RCCW will operate also if the BCW system turns off due to malfunction. Kia recommends to visit an authorized Kia dealer/ service partner.

Limitations of the system

The driver must be cautious in the below situations, because the system may not detect other vehicles or objects in certain circumstances.

- When a trailer or carrier is installed.
- The vehicle drives in inclement weather such as heavy rain or snow.
- The sensor is polluted with rain, snow, mud, etc.
- The rear bumper where the sensor is located is covered with a foreign object such as a bumper sticker, a bumper guard, a bike rack, etc.
- The rear bumper is damaged, or the sensor is out of the original default position.
- The vehicle height gets lower or higher due to heavy loading in a trunk, abnormal tire pressure, etc.
- When the temperature of the rear bumper is high.
- When the sensors are blocked by other vehicles, walls or parking-lot pillars.
- The vehicle drives on a curved road.
- The vehicle drives through a tollgate.
- The road pavement (or the peripheral ground) abnormally contains metallic components (i.e. possibly due to subway construction).
- There is a fixed object near the vehicle, such as a guardrail.
- While going down or up a steep road where the height of the lane is different.
- Driving on a narrow road where trees or grass or overgrown.
- Driving in rural areas where the sensor does not detect another vehicle or structure for an extended period of time.
- Driving on a wet road.
- Driving on a road where the guardrail or wall is in double structure.
- A big vehicle is near such as a bus or truck.
- When the other vehicle approaches very close.
- When the other vehicle passes at a very fast speed.
- While changing lanes.
- If the vehicle has started at the same time as the vehicle next to you and has accelerated.
- When the vehicle in the next lane moves two lanes away from you OR when the vehicle two lanes away moves to the next lane from you.
- A motorcycle or bicycle is near.
- A flat trailer is near.
- If there are small objects in the detecting area such as a shopping cart or a baby stroller.
- If there is a low height vehicle such as a sports car.
- The vehicle abruptly changes driving direction.
- The vehicle makes sharp lane changes.
- The vehicle sharply stops.

- Temperature is extremely low around the vehicle.
- The vehicle severely vibrates while driving over a bumpy road, uneven/ bumpy road, or concrete patch.
- The vehicle drives on a slippery surface due to snow, water puddle, or ice.
- The vehicle is driven near areas containing metal substances such as a construction zone, railroad, etc.
- When the surrounding vehicle or structure is driving in a wide area (desert, field, suburb etc.)

The BCW indicator on the outer side view mirror may not illuminate properly when:

- The outside rearview mirror housing is damaged
- The mirror is covered with dirt, snow, or debris.
- The window is covered with dirt, snow, or debris.
- The window is tinted.

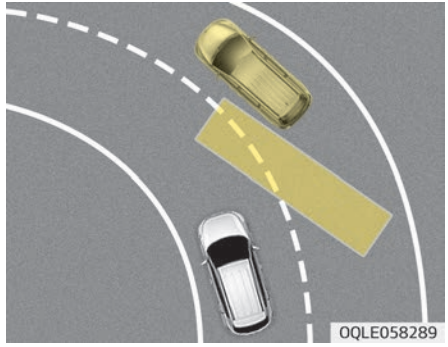

- Driving on a curve
  The BCW systems may not operate properly when driving on acurved road. In certain instances thesystem may not detect the vehicle inthe next lane. Always pay attention to road and driving conditions, while driving.

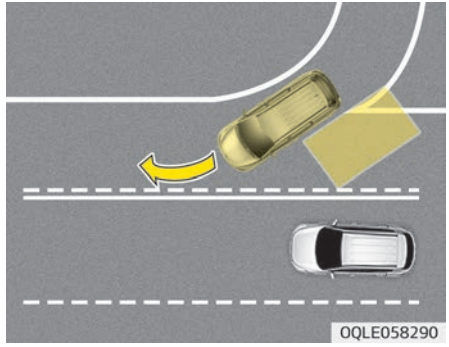

The BCW systems may not operate properly when driving on a curved road. In certain instances the system may recognize a vehicle in the same lane.
Always pay attention to road and driving conditions, while driving.

- Driving where the road is merging/ dividing The BCW systems may not operate properly when driving where the road is merging/dividing. In certain instances the system may not detect the vehicle in the next lane.
  Always pay attention to road and driving conditions, while driving.

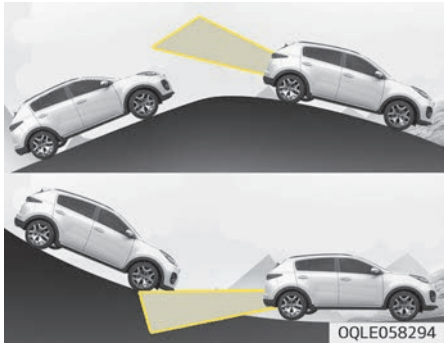

- Driving on a slope
  The BCW systems may not operate properly when driving on a slope. In certain instances the system may not detect the vehicle in the next lane.
  Also, in certain instances the system may wrongly recognize the ground or structures.
  Always pay attention to road and driving conditions, while driving.

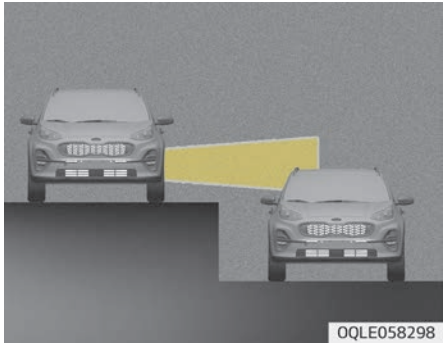

- Driving where the heights of the lanes are different
  The BCW systems may not operate properly when driving where the heights of the lanes are different.
  In certain instances, the system may not detect the vehicle on a road with different lane heights (underpass joining section, grade separated intersections, etc.).
  Always pay attention to road and driving conditions, while driving.

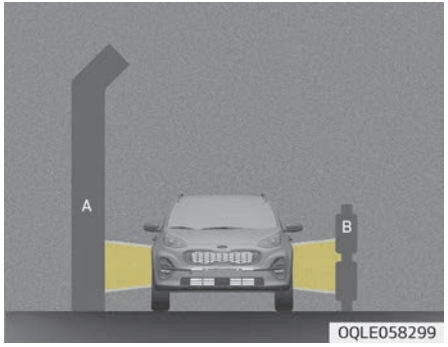

[A] : noise barrier, [B] : guardrail

- Driving where there is a structure beside the road
  The BCW systems may not operate properly when driving where there is structure beside the road. In certain instances, the system may wrongly recognize the structures (noise barriers, guardrail, double guardrail, median strip, bollard, street light, road sign, tunnel wall, etc.) beside the road. Always pay attention to road and driving conditions, while driving.

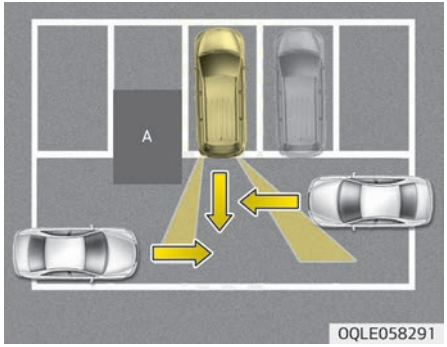

[A] : Structure

- Driving where there is a vehicle or structure near
  The system may not operate properly when driving where there is a vehicle or structure near. In certain instances, the system may not detect the vehicle approaching from behind and the warning or brake may not operate properly. Always pay attention to your surrounding while driving.

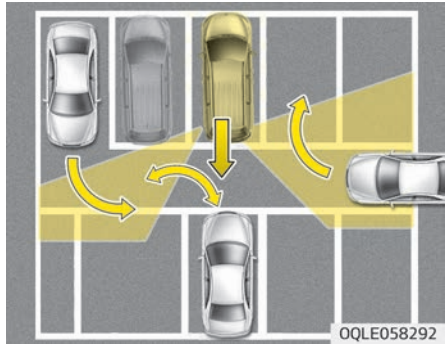

- When the vehicle is in a complex parking environment
  The system may not operate properly when the vehicle is in a complex parking environment. In certain instances, the system may not be able to exactly determine the risk of collision for the vehicles which are parking or pulling out near your vehicle (e.g. a vehicle escaping beside your vehicle, a vehicle parking or pulling out in the rear area, a vehicle approaching your vehicle making a turn, etc.). In this case, the warning or brake may not operate properly.

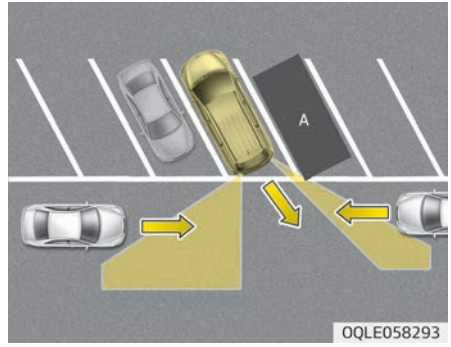

[A] : Vehicle

- When the vehicle is parked diagonally
  The system may not operate properly when the vehicle is parked diagonally. In certain instances, when the diagonally parked vehicle is pulled out of the parking space, the system may not detect the vehicle approaching from the rear left/right of your vehicle. In this case, the warning or brake may not operate properly. Always pay attention to your surrounding while driving.

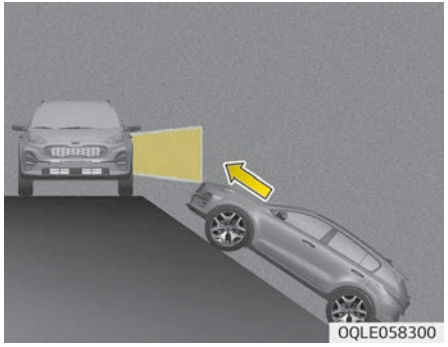
OQLE058300

- When the vehicle is on/near a slope
  The system may not operate properly when the vehicle is on/near a slope. In certain instances, the system may not detect the vehicle approaching from the rear left/right and the warning or brake may not operate properly. Always pay attention to your surrounding while driving.

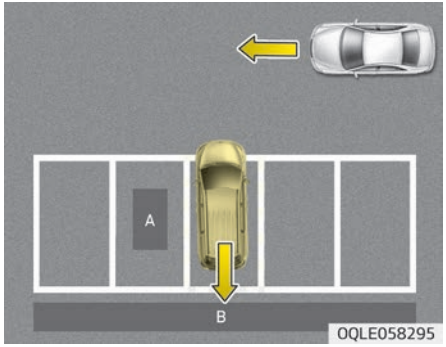

OQLE058295

[A] : Structure, [B] :Wall

- Pulling into the parking space where there is a structure
  The system may not operate properly when pulling in the vehicle to the parking space where there is a structure at the back or side of your vehicle.
  In certain instances, when backing into the parking space, the system may not detect the vehicle moving in front of your vehicle. In this case, the warning or brake may not operate properly.
  Always pay attention to the parking space while driving.

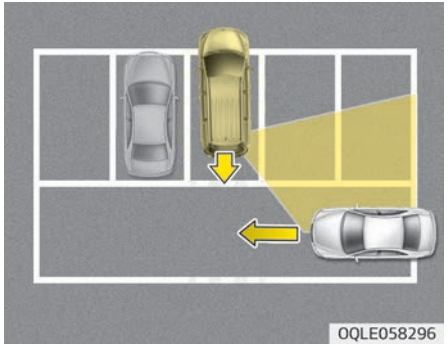
OQLE058296

- When the vehicle is parked rearward.
  If the vehicle is parked rearward and the sensor detects the another vehicle in the rear area of the parking space, the system can warn or control braking. Always pay attention to the parking space while driving.

DRIVER ATTENTION WARNING (DAW, IF EQUIPPED)

The Driver Attention Warning (DAW), system is to warn the driver with any hazardous driving situations upon detecting the driver's fatigue level or inattentive driving practices.

System setting and activation

System setting

- To turn ON the Driver Attention Warning system, turn on the engine, and then select 'User Settings ➠ Assist ➠ Driver Attention Warning ➠ Normal(High) Sensitivity' on the LCD display.
- The driver can select the Driver Attention Warning system mode.
  - Off : The Driver Attention Warning system is deactivated.
  - Normal Sensitivity : The Driver Attention Warning system alerts the driver of his/her fatigue level or inattentive driving practices.
  - High Sensitivity : The Driver Attention Warning system alerts the driver of his/her fatigue level or inattentive driving practices faster than Normal Sensitivity mode.
- The set-up of the Driver Attention Warning system will be maintained, as selected, when the engine is restarted.

Display of the driver's attention level



OJF058423L



OJF058424L

- The driver can monitor their driving conditions on the LCD display.
  - Select 'User Settings Mode' and then 'Assist' on the LCD display. (For more information, refer to “LCD Display” on page 4-61.)
- The driver's attention level is displayed on the scale of 1 to 5. The lower the number is, the more inattentive the driver is.
- The number decreases when the driver does not take a break for a certain period of time.
- The number increases when the driver attentively drives for a certain period of time.
- When the driver turns on the system while driving, it displays ‘Last Break time’ and level reflected that.

Take a break

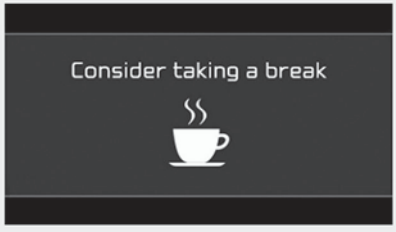

OJF058426LB

- The "Consider taking a break" message appears on the LCD display and a warning sounds in order to suggest the driver to take a break, when the driver's attention level is below 1.
- The Driver Attention Warning system does not suggest the driver to take a break, when the total driving time is shorter than 10 minutes.

⚠ CAUTION

While other beeps such as the seat belt warning sound are in operation and override the DAW alarming system, DAW beeps may not occur.

Resetting the system



OJF058427L

- The last break time is set to 00:00 and the driver's attention level is set to 5 (very attentive) when the driver resets the Driver Attention Warning system.
- The driver attention warning system resets in the following situations.
  - The engine is turned OFF.
  - The driver unfastens the seat belt and then opens the driver's door.
  - Stop lasting more than 10 minutes.
- The driver attention warning system operates again, when the driver restarts driving.

System standby



OJF058427L

The Driver Attention Warning system enters the ready status and displays the 'Standby' screen in the following situations.

- The camera sensor keeps failing to detect the lanes.
- Driving speed remains under 60 km/h or over 180 km/h.

System malfunction

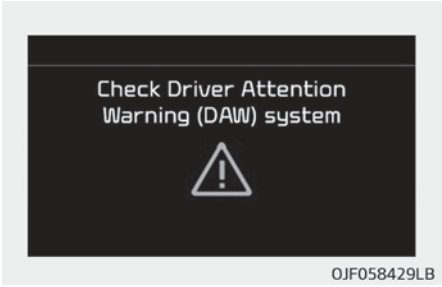

When the "Check DAW system" warning message appears, the system is not working properly. In this case, we recommend you to have the vehicle inspected by an authorized Kia dealer.

⚠ WARNING

- **The Driver Attention Warning system is not a substitute for safe driving practices, but a convenience function only. It is the responsibility of the driver to always drive cautiously to prevent unexpected and sudden situations from occurring. Pay attention to the road conditions at all times.**
- **It may suggest a break according to the driver's driving pattern or habits even if the driver doesn't feel fatigued.**
- **The driver, who feels fatigued, should take a break, even though there is no break suggestion by the Driver Attention Warning system.**

✻ NOTICE

The Driver Attention Warning system utilizes the camera sensor on the front windshield for its operation. To keep the camera sensor in

(Continued)

(Continued)

the best condition, you should observe the followings:

- Do not disassemble camera temporarily for tinted window or attaching any types of coatings and accessories. If you disassemble a camera and assemble it again, take your vehicle to an authorized Kia dealer and have the system checked to need a calibration.
- Do not locate any reflective objects (i.e. white paper, mirror) over the dashboard. Any light reflection may cause a mal-function of the Driver Attention Warning (DAW) system.
- Pay extreme caution to keep the camera sensor out of water.
- Do not arbitrarily disassemble the camera assembly, nor apply any impact on the camera assembly.

• Playing the vehicle audio system at high volume may offset the Driver Attention Warning system warning sounds.

⚠ CAUTION

The Driver Attention Warning system may not properly operate with limited alerting in the following situations:

- **The lane detection performance is limited. (For more information, refer to "Lane Keeping Assist System (LKA)" on page 6-112.)**
- **The vehicle is violently driven or is abruptly turned for obstacle avoidance (e.g. construction area, other vehicles, fallen objects, bumpy road).**
- **Forward drivability of the vehicle is severely undermined (possibly due to wide variation in tire pressures, uneven tire wear-out, toe-in/toe-out alignment).**
- **The vehicle drives on a curvy road.**
- **The vehicle drives on a bumpy road.**
- **The vehicle drives through a windy area.**
- **The vehicle is controlled by the following driving assist systems:**

(Continued)

(Continued)

- **Lane Keeping Assist System (LKA)**
- **Forward Collision-avoidance Assist (FCA) System.**
- **Smart Cruise Control (SCC) System**

ECONOMICAL OPERATION

Your vehicle's fuel economy depends mainly on your style of driving, where you drive and when you drive.
Each of these factors affects how many kilometers (miles) you can get from a liter (gallon) of fuel. To operate your vehicle as economically as possible, use the following driving suggestions to help save money in both fuel and repairs:

- Drive smoothly. Accelerate at a moderate rate. Do not make "jackrabbit" starts or full-throttle shifts and maintain a steady cruising speed. Do not race between stop lights. Try to adjust your speed to the traffic so you do not have to change speeds unnecessarily. Avoid heavy traffic whenever possible. Always maintain a safe distance from other vehicles so you can avoid unnecessary braking. This also reduces brake wear.
- Drive at a moderate speed. The faster you drive, the more fuel your vehicle uses. Driving at a moderate speed, especially on the highway, is one of the most effective ways to reduce fuel consumption.
- Do not "ride" the brake or clutch pedal. This can increase fuel consumption and also increase wear on these components. In addition, driving with your foot resting on the brake pedal may cause the brakes to overheat, which reduces their effectiveness and may lead to more serious consequences.
- Take care of your tires. Keep them inflated to the recommended pressure. Incorrect inflation, either too much or too little, results in unnecessary tire wear. Check the tire pressures at least once a month.
- Be sure that the wheels are aligned correctly. Improper alignment can result from hitting curbs or driving too fast over irregular surfaces. Poor alignment causes faster tire wear and may also result in other problems as well as greater fuel consumption.
- Keep your vehicle in good condition. For better fuel economy and reduced maintenance costs, maintain your vehicle in accordance with the maintenance schedule in Chapter 8, Maintenance. If you drive your vehicle in severe conditions, more frequent maintenance is required (see Chapter 8, Maintenance for details).
- Keep your vehicle clean. For maximum service, your vehicle should be kept clean and free of corrosive materials. It is especially important that mud, dirt, ice, etc. not be allowed to accumulate on the underside of the vehicle. This extra weight can result in increased fuel consumption and also contribute to corrosion.
- Travel lightly. Do not carry unnecessary weight in your vehicle. Weight reduces fuel economy.
- Do not let the engine idle longer than necessary. If you are waiting (and not in traffic), turn off your engine and restart only when you're ready to go.
- Remember, your vehicle does not require extended warm-up. After the engine has started, allow the engine to run for 10 to 20 seconds prior to placing the vehicle in gear. In very cold weather, however, give your engine a slightly longer warm-up period.
- Do not "lug" or "over-rev" the engine. Lugging is driving too slowly in too high a gear resulting engine bucking. If this happens, shift to a lower gear. Over-revving is racing the engine beyond its safe limit. This can be avoided by shifting at the recommended speeds.

- Use your air conditioning sparingly. The air conditioning system is operated by engine power so your fuel economy is reduced when you use it.
- Open windows at high speeds can reduce fuel economy.
- Fuel economy is less in crosswinds and headwinds. To help offset some of this loss, slow down when driving in these conditions.

Keeping a vehicle in good operating condition is important both for economy and safety. Therefore, have the system serviced by a professional workshop.
Kia recommends to visit an authorized Kia dealer/service partner.

⚠ WARNING

■ Engine off during motion

Never turn the engine off to coast down hills or anytime the vehicle is in motion. The power steering and power brakes will not function properly without the engine running. Instead, keep the engine on and down-

(Continued)

(Continued)

shift to an appropriate gear for engine braking effect. In addition, turning off the ignition while driving could engage the steering wheel lock (if equipped) resulting in loss of vehicle steering which could cause serious injury or death.

SPECIAL DRIVING CONDITIONS

Hazardous driving conditions

When hazardous driving conditions are encountered such as water, snow, ice, mud, sand, or similar hazards, follow these suggestions:

- Drive cautiously and allow extra distance for braking.
- Avoid sudden braking or steering.
- When braking with non-ABS brakes pump the brake pedal with a light up-and-down motion until the vehicle is stopped.

⚠ WARNING

■ ABS

Do not pump the brake pedal on a vehicle equipped with ABS.

- If stalled in snow, mud, or sand, use second gear. Accelerate slowly to avoid spinning the drive wheels.
- Use sand, rock salt, tire chains, or other non-slip material under the drive wheels to provide traction when stalled in ice, snow, or mud.

⚠ WARNING

■ Downshifting

Downshifting with an automatic transaxle, while driving on slippery surfaces can cause an accident. The sudden change in tire speed could cause the tires to skid. Be careful when downshifting on slippery surfaces.

Reducing the risk of a rollover

This multi-purpose passenger vehicle is defined as a Sports Utility Vehicle (SUV).

SUV's have higher ground clearance and a narrower track to make them capable of performing in a wide variety of road applications. Specific design characteristics give them a higher center of gravity than ordinary vehicles. An advantage of the higher ground clearance is a better view of the road, which allows you to anticipate problems. They are not designed for cornering at the same speeds as conventional passenger vehicles. Due to this risk, driver and passengers are strongly recommended to buckle their seat belts. In a rollover crash, an unbelted person is more likely to die than a person wearing a seat belt. There are steps that a driver can make to reduce the risk of a rollover. If at all possible, avoid sharp turns or abrupt maneuvers, do not load your roof rack with heavy cargo, and never modify your vehicle in any way.

⚠ WARNING

■ Rollover

As with other Sports Utility Vehicle (SUV), failure to operate this vehicle

(Continued)

(Continued)

correctly may result in loss of control, an accident or vehicle rollover.

- **Utility vehicles have a significantly higher rollover rate than other types of vehicles.**
- **Specific design characteristics (higher ground clearance, narrower track, etc.) give this vehicle a higher center of gravity than ordinary vehicles.**
- **A SUV is not designed for cornering at the same speeds as conventional vehicles.**
- **Avoid sharp turns or abrupt maneuvers.**
- **In a rollover crash, an unbelted person is significantly more likely to die than a person wearing a seat belt. Make sure everyone in the vehicle is properly buckled up.**

⚠ WARNING

Your vehicle is equipped with tires designed to provide safe ride and
(Continued)

(Continued)

handling capability. Do not use a size and type of tire and wheel that is different from the one that is originally installed on your vehicle. It can affect the safety and performance of your vehicle, which could lead to steering failure or rollover and serious injury. When replacing the tires, be sure to equip all four tires with the tire and wheel of the same size, type, tread, brand and load-carrying capacity. If you nevertheless decide to equip your vehicle with any tire/wheel combination not recommended by Kia for off road driving, you should not use these tires for highway driving.

Rocking the vehicle

If it is necessary to rock the vehicle to free it from snow, sand, or mud, first turn the steering wheel right and left to clear the area around your front wheels. Then, shift back and forth between 1 (First) and R (Reverse) in vehicles equipped with a manual transaxle or R (Reverse) and any forward gear in vehicles equipped with an automatic transaxle. Do not race the engine, and spin the wheels as little as possible. If you are still stuck after a few tries, have the vehicle pulled out by a tow vehicle to avoid engine overheating and possible damage to the transaxle.

⚠ CAUTION

Prolonged rocking may cause engine over-heating, transaxle damage or failure, and tire damage.

⚠ WARNING

■ Spinning tires

Do not spin the wheels, especially at speeds more than 56 km/h
(Continued)

(Continued)

(35 mph). Spinning the wheels at high speeds when the vehicle is stationary could cause a tire to overheat which could result in tire damage that may injure bystanders.

✻ NOTICE

The ESC system should be turned OFF prior to rocking the vehicle.

⚠ WARNING

If your vehicle becomes stuck in snow, mud, sand, etc., then you may attempt to rock the vehicle free by moving it forward and backward. Do not attempt this procedure if people or objects are anywhere near the vehicle. During the rocking operation the vehicle may suddenly move forward or backward as it becomes unstuck, causing injury or damage to nearby people or objects.

Smooth cornering



Avoid braking or gear changing in corners, especially when roads are wet. Ideally, corners should always be taken under gentle acceleration. If you follow these suggestions, tire wear will be held to a minimum.

Driving at night



Because night driving presents more hazards than driving in the daylight, here are some important tips to remember:

- Slow down and keep more distance between you and other vehicles, as it may be more difficult to see at night, especially in areas where there may not be any street lights.
- Adjust your mirrors to reduce the glare from other driver's headlights.

- Keep your headlights clean and properly aimed on vehicles not equipped with the automatic headlight aiming feature. Dirty or improperly aimed headlights will make it much more difficult to see at night.
- Avoid staring directly at the headlights of oncoming vehicles. You could be temporarily blinded, and it will take several seconds for your eyes to readjust to the darkness.

Driving in the rain



Rain and wet roads can make driving dangerous, especially if you're not prepared for the slick pavement. Here are a few things to consider when driving in the rain:

- A heavy rainfall will make it harder to see and will increase the distance needed to stop your vehicle, so slow down.
- Keep your windshield wiping equipment in good shape. Replace your windshield wiper blades when they show signs of streaking or missing areas on the windshield.
- If your tires are not in good condition, making a quick stop on wet pavement can cause a skid and possibly lead to an accident. Be sure your tires are in good shape.
- Turn on your headlights to make it easier for others to see you.
- Driving too fast through large puddles can affect your brakes. If you must go through puddles, try to drive through them slowly.
- If you believe you may have gotten your brakes wet, apply them lightly while driving until normal braking operation returns.

Driving in flooded areas

Avoid driving through flooded areas unless you are sure the water is no higher than the bottom of the wheel hub. Drive through any water slowly. Allow adequate stopping distance because brake performance may be affected.
After driving through water, dry the brakes by gently applying them several times while the vehicle is moving slowly.

Driving off-road

Drive carefully off-road because your vehicle may be damaged by rocks or roots of trees. Become familiar with the off-road conditions where you are going to drive before you begin driving.

Highway driving

Tires



Adjust the tire inflation pressures to specification. Low tire inflation pressures will result in overheating and possible failure of the tires.
Avoid using worn or damaged tires which may result in reduced traction or tire failure.

✻ NOTICE

Never exceed the maximum tire inflation pressure shown on the tires.

⚠ WARNING

- **Underinflated or overinflated tires can cause poor handling, loss of vehicle control, and sudden tire failure leading to accidents, injuries, and even death. Always check the tires for proper inflation before driving. For proper tire pressures, refer to "Tires and wheels" on page 9-09.**
- **Driving on tires with no or insufficient tread is dangerous. Worn-out tires can result in loss of vehicle control, collisions, injury, and even death. Worn-out tires should be replaced as soon as possible and should never be used for driving. Always check the tire tread before driving your vehicle. For further information and tread limits, refer to "Tires and wheels" on page 9-09**

Fuel, engine coolant and engine oil

High speed travel consumes more fuel than urban motoring. Do not forget to check both engine coolant and engine oil.

Drive belt

A loose or damaged drive belt may result in overheating of the engine.

WINTER DRIVING

Severe weather conditions in the winter result in greater wear and other problems. To minimize the problems of winter driving, you should follow these suggestions:

⚠ WARNING

Summer tires are equipped to provide the best driving performance on dry roads, varying according to specification.
Since vehicles equipped with summer tires significantly reduce surface forces when driving on snow or ice roads, it is recommended to use snow tires of the same size as the standard tires of the vehicle or to replace them with all-season tires or to use snow chains.

Snowy or icy conditions

To drive your vehicle in deep snow, it may be necessary to use snow tires or to install tire chains on your tires. If snow tires are needed, it is necessary to select tires equivalent in size and type of the original equipment tires. Failure to do so may adversely affect the safety and handling of your vehicle. Furthermore, speeding, rapid acceleration, sudden brake applications, and sharp turns are potentially very hazardous practices.
During deceleration, use engine braking to the fullest extent. Sudden brake applications on snowy or icy roads may cause skids to occur. You need to keep sufficient distance between the vehicle in operation in front and your vehicle. Also, apply the brake gently. It should be noted that installing tire chains on the tire will provide a greater driving force, but will not prevent side skids.

✻ NOTICE

Tire chains are not legal in all countries. Check the country laws before fitting tire chains.

Snow tires

If you mount snow tires on your vehicle, make sure they are radial tires of the same size and load range as the original tires. Mount snow tires on all four wheels to balance your vehicle's handling in all weather conditions. Keep in mind that the traction provided by snow tires on dry roads may not be as high as your vehicle's original equipment tires.You should drive cautiously even when the roads are clear. Check with the tire dealer for maximum speed recommendations.

⚠ WARNING

■ Snow tire size

Snow tires should be equivalent in size and type to the vehicle's standard tires. Otherwise, the safety and handling of your vehicle may be adversely affected.

Do not install studded tires without first checking local, state and municipal regulations for possible restrictions against their use.

Tire chains

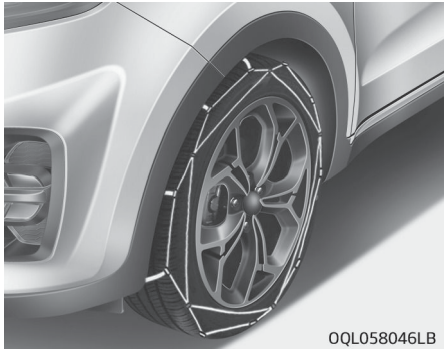

Since the sidewalls of radial tires are thinner, they can be damaged by mounting some types of snow chains on them. Therefore, the use of snow tires is recommended instead of snow chains. Do not mount tire chains on vehicles equipped with aluminum wheels; snow chains may cause damage to the wheels. If snow chains must be used, use wire-type chains with a thickness of less than 12 mm (0.47 in). Damage to your vehicle caused by improper snow chain use is not covered by your vehicle manufacturers warranty.
When using tire chains, install tire chains only on the front tires.

Snow chains should be installed on the front wheels.
This also applied All four wheels vehicle.

⚠ CAUTION

- **Make sure the snow chains are the correct size and type for your tires. Incorrect snow chains can cause damage to the vehicle body and suspension and may not be covered by your vehicle manufacturer warranty. Also, the snow chain connecting hooks may be damaged from contacting vehicle components causing the snow chains to come loose from the tire. Make sure the snow chains are SAE class "S" certified.**
- **Always check chain installation for proper mounting after driving approximately 0.5 to 1 km (0.3 to 0.6 miles) to ensure safe mounting. Retighten or remount the chains if they are loose.**

Chain installation

When installing chains, follow the manufacturer's instructions and mount them as tightly as you can. Drive slowly with chains installed. If you hear the chains contacting the body or chassis, stop and tighten them. If they still make contact, slow down until it stops. Remove the chains as soon as you begin driving on cleared roads.

⚠ WARNING

■ Mounting chains

When mounting snow chains, park the vehicle on level ground away from traffic. Turn on the vehicle Hazard Warning flashers and place a triangular emergency warning device behind the vehicle if available. Always place the vehicle in P (Park), apply the parking brake and turn off the engine before installing snow chains.

⚠ WARNING

■ Tire chains

- **The use of chains may adversely affect vehicle handling.**
- **Do not exceed 30 km/h (20 mph) or the chain manufacturer's recommended speed limit, whichever is lower.**
- **Drive carefully and avoid bumps, holes, sharp turns, and other road hazards, which may cause the vehicle to bounce.**
- **Avoid sharp turns or lockedwheel braking.**

⚠ CAUTION

- **Chains that are the wrong size or improperly installed can damage your vehicle's brake lines, suspension, body and wheels.**
- **Stop driving and retighten the chains any time you hear them hitting the vehicle.**

Use high quality ethylene glycol coolant

Your vehicle is delivered with high quality ethylene glycol coolant in the cooling system. It is the only type of coolant that should be used because it helps prevent corrosion in the cooling system, lubricates the water pump and prevents freezing. Be sure to replace or replenish your coolant in accordance with the maintenance schedule in 8-24. Before winter, have your coolant tested to assure that its freezing point is sufficient for the temperatures anticipated during the winter.

Check battery and cables

Winter puts additional burdens on the battery system. Visually inspect the battery and cables as described on page 8-44. Have the level of charge in your battery checked by a professional workshop. Kia recommends to visit an authorized Kia dealer/service partner.

Change to "winter weight" oil if necessary

In some climates it is recommended that a lower viscosity "winter weight" oil be used during cold weather. See “Recommended SAE viscosity number” on page 9-13. If you aren't sure what weight oil you should use, Kia recommends to consult an authorized Kia dealer/service partner.

Check spark plugs and ignition system

Inspect your spark plugs as described on page 8-24 and replace them if necessary. Also check all ignition wiring and components to be sure they are not cracked, worn or damaged in any way.

To keep locks from freezing

To keep the locks from freezing, squirt an approved de-icer fluid or glycerine into the key opening. If a lock is covered with ice, squirt it with an approved de-icing fluid to remove the ice. If the lock is frozen internally, you may be able to thaw it out by using a heated key. Handle the heated key with care to avoid injury.

Use approved window washer anti-freeze in system

To keep the water in the window washer system from freezing, add an approved window washer anti-freeze solution in accordance with instructions on the container. Window washer anti-freeze is available from an authorized Kia dealer/service partner and most auto parts outlets. Do not use engine coolant or other types of anti-freeze as these may damage the paint finish.

Don't let your parking brake freeze

Under some conditions your parking brake can freeze in the engaged position. This is most likely to happen when there is an accumulation of snow or ice around or near the rear brakes or if the brakes are wet. If there is a risk the parking brake may freeze, apply it only temporarily while you put the shift lever in P (automatic transaxle) or in first or reverse gear (manual transaxle) and block the rear wheels so the vehicle cannot roll. Then release the parking brake.

Don't let ice and snow accumulate underneath

Under some conditions, snow and ice can build up under the fenders and interfere with the steering. When driving in severe winter conditions where this may happen, you should periodically check underneath the vehicle to be sure the movement of the front wheels and the steering components is not obstructed.

Carry emergency equipment

Depending on the severity of the weather, you should carry appropriate emergency equipment. Some of the items you may want to carry include tire chains, tow straps or chains, flashlight, emergency flares, sand, shovel, jumper cables, window scraper, gloves, ground cloth, coveralls, blanket, etc.

TRAILER TOWING

If you are considering towing with your vehicle, you should first check with your country's Department of Motor Vehicles to determine their legal requirements.
Since laws vary the requirements for towing trailers, cars, or other types of vehicles or apparatus may differ. Kia recommends to ask an authorized Kia dealer/service partner.

⚠ WARNING

■ Towing a trailer

If you don't use the correct equipment and/or drive improperly, you can lose control when you pull a trailer. For example, if the trailer is too heavy, the brakes may not work well - or even at all. You and your passengers could be seriously or fatally injured. Pull a trailer only if you have followed all the steps in this section.

⚠ WARNING

■ Weight limits

Before towing, make sure the total trailer weight, GCW (gross combination weight), GVW (gross vehicle weight), GAW (gross axle weight) and trailer tongue load are all within the limits.

⚠ WARNING

When you tow the trailer, make sure that you turn off the ISG Function.

✻ NOTICE

■ For Europe

(Continued)

(Continued)

- The technically permissible maximum load on the rear axle(s) may be exceeded by not more than 15% and the technically permissible maximum laden mass of the vehicle may be exceeded by not more than 10% or 100 kg (220.4 lbs), whichever value is lower. In this case, do not exceed 100 km/h (62.1 mph) for vehicle of category M1 or 80 km/h (49.7 mph) for vehicle of category N1.
- When towing a trailer, the additional load imposed at the trailer coupling device may cause the rear tire maximum load ratings to be exceeded, but not by more than 15%. In such a case, do not exceed 100 km/h, and the rear tire pressure should be at least 20 kPa(0.2 bar) above the tire pressure(s) as recommended for normal use (i.e. without a trailer attached).

⚠ CAUTION

Pulling a trailer improperly can damage your vehicle and result in costly repairs not covered by your warranty. To pull a trailer correctly, follow the advice in this section.

Your vehicle can tow a trailer. To identify what the vehicle trailering capacity is for your vehicle, you should read the information in "Weight of the trailer" on page 6-157.
Remember that trailering is different than just driving your vehicle by itself. Trailering means changes in handling, durability, and fuel economy.
Successful, safe trailering requires correct equipment, and it has to be used properly.
This section contains many time-tested, important trailering tips and safety rules. Many of these are important for your safety and that of your passengers. Please read this section carefully before you pull a trailer.

Load-pulling components such as the engine, transaxle, wheel assemblies, and tires are forced to work harder against the load of the added weight. The engine is required to operate at relatively higher speeds and under greater loads. This additional burden generates extra heat. The trailer also considerably adds wind resistance, increasing the pulling requirements.

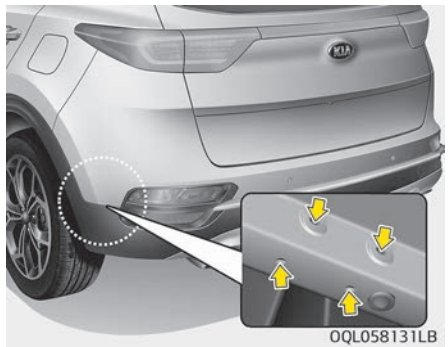

✻ NOTICE

■ Location of trailer mounting
(Continued)

(Continued)

The mounting hole for hitches are located on both sides of the underbody behind the rear tires.

Hitches

It's important to have the correct hitch equipment. Crosswinds, large trucks going by, and rough roads are a few reasons why you'll need the right hitch. Here are some rules to follow:

- Do you have to make any holes in the body of your vehicle when you install a trailer hitch? If you do, then be sure to seal the holes later when you remove the hitch.
  If you do not seal them, deadly carbon monoxide (CO) from your exhaust can get into your vehicle, as well as dirt and water.
- The bumpers on your vehicle are not intended for hitches. Do not attach rental hitches or other bumper-type hitches to them. Use only a frame-mounted hitch that does not attach to the bumper.
- Kia trailer hitch accessary is available at an authorized Kia dealer/service partner.

Safety chains

You should always attach chains between your vehicle and your trailer. Cross the safety chains under the tongue of the trailer so that the tongue will not drop to the road if it becomes separated from the hitch.
Instructions about safety chains may be provided by the hitch manufacturer or by the trailer manufacturer. Follow the manufacturer's recommendation for attaching safety chains. Always leave just enough slack so you can turn with your trailer. And, never allow safety chains to drag on the ground.

Trailer brakes

If your trailer is equipped with a braking system, make sure it conforms to your country's regulations and that it is properly installed and operating correctly.
If your trailer weight exceeds the maximum allowed weight without trailer brakes, then the trailer will also require its own brakes as well. Be sure to read and follow the instructions for the trailer brakes so you'll be able to install, adjust and maintain them properly.

- Do not tap into or modify your vehicle's brake system.

⚠ WARNING

■ Trailer brakes

Do not use a trailer with its own brakes unless you are absolutely certain that you have properly set up the brake system. This is not a task for amateurs. Use an experienced, competent trailer shop for this work.

Driving with a trailer

Towing a trailer requires a certain amount of experience. Before setting out for the open road, you must get to know your trailer. Acquaint yourself with the feel of handling and braking with the added weight of the trailer. And always keep in mind that the vehicle you are driving is now a good deal longer and not nearly so responsive as your vehicle is by itself.

Before you start, check the trailer hitch and platform, safety chains, electrical connector(s), lights, tires and mirror adjustment. If the trailer has electric brakes, start your vehicle and trailer moving and then apply the trailer brake controller by hand to be sure the brakes are working. This lets you check your electrical connection at the same time.
During your trip, check occasionally to be sure that the load is secure, and that the lights and any trailer brakes are still working.

Following distances

Stay at least twice as far behind the vehicle ahead as you would when driving your vehicle without a trailer. This can help you avoid situations that require heavy braking and sudden turns.

Passing

You'll need more passing distance up ahead when you're towing a trailer. And, because of the increased vehicle length, you'll need to go much farther beyond the passed vehicle before you can return to your lane. Due to the added load to the engine when going uphill the vehicle may also take longer to pass than it would on flat ground.

Backing up

Hold the bottom of the steering wheel with one hand. Then, to move the trailer to the left, just move your hand to the left. To move the trailer to the right, move your hand to the right. Always back up slowly and, if possible, have someone guide you.

Making turns

When you're turning with a trailer, make wider turns than normal. Do this so your trailer won't strike soft shoulders, curbs, road signs, trees, or other objects near the edge of the road. Avoid jerky or sudden maneuvers. Signal well in advance before turning or lane changes.

Turn signals when towing a trailer

When you tow a trailer, your vehicle has to have a different turn signal flasher and extra wiring. The green arrows on your instrument panel will flash whenever you signal a turn or lane change. Properly connected, the trailer lights will also flash to alert other drivers you're about to turn, change lanes, or stop.

When towing a trailer, the green arrows on your instrument panel will flash for turns even if the bulbs on the trailer are burned out. Thus, you may think drivers behind you are seeing your signals when, in fact, they are not. It is important to check occasionally to be sure the trailer bulbs are still working. You must also check the lights every time you disconnect and then reconnect the wires.

Do not connect a trailer lighting system directly to your vehicle's lighting system. Use only an approved trailer wiring harness.

Have yourself assisted by a professional workshop in installing the wiring harness.

Kia recommends to visit an authorized Kia dealer/service partner.

⚠ WARNING

Failure to use an approved trailer wiring harness could result in damage to the vehicle electrical system and/or personal injury.

Driving on grades

Reduce the speed and shift to a lower gear before you start down a long or steep downgrade. If you don't shift down, you might have to use your brakes so much that they would get hot and no longer operate efficiently.

On a long uphill grade, shift down and reduce your speed to around 70 km/h (45 mph) to reduce the possibility of engine and transaxle overheating.

If your trailer weighs more than the maximum trailer weight without trailer brakes and you have an automatic transaxle, you should drive in D (Drive) when towing a trailer.

Operating your vehicle in D (Drive) when towing a trailer will minimize heat build up and extend the life of your transaxle.

⚠ CAUTION

- **When towing a trailer on steep grades (in excess of 6%) pay close attention to the engine coolant temperature gauge to ensure the engine does not overheat.**
  If the needle of the coolant temperature gauge moves across the dial towards "130/H (HOT)", pull over and stop as soon as it is safe to do so, and allow the engine to idle until it cools down. You may proceed once the engine has cooled sufficiently.
- **You must decide driving speed depending on trailer weight and uphill grade to reduce the possibility of engine and transaxle overheating.**

Parking on hills

Generally, if you have a trailer attached to your vehicle, you should not park your vehicle on a hill. People can be seriously or fatally injured, and both your vehicle and the trailer can be damaged if they unexpectedly roll down hill.

⚠ WARNING

■ Parking on a hill

Parking your vehicle on a hill with a trailer attached could cause serious injury or death, should the trailer break loose or the brake stops working.
Do not apply the accelerator pedal to hold the vehicle on an uphill.

However, if you ever have to park your trailer on a hill, here is how to do it:

1. Pull the vehicle into the parking space. Turn the steering wheel in the direction of the curb (right if headed down hill, left if headed up hill).
2. If the vehicle has a manual transaxle, place the car in neutral. If the vehicle has an automatic transaxle, place the car in P (Park).
3. Set the parking brake and shut off the vehicle.
4. Place chocks under the trailer wheels on the down hill side of the wheels.
5. Start the vehicle, hold the brakes, shift to neutral, release the parking brake and slowly release the brakes until the trailer chocks absorb the load.
6. Reapply the brakes, reapply the parking brake and shift the vehicle to R (Reverse) for manual transaxle or P (Park) for automatic transaxle.
7. Shut off the vehicle and release the vehicle brakes but leave the parking brake set.

⚠ WARNING

■ Parking brake

It can be dangerous to get out of your vehicle if the parking brake is not firmly set.
If you have left the engine running, the vehicle can move suddenly. You or others could be seriously or fatally injured.

When you are ready to leave after parking on a hill

1. With the manual transaxle in Neutral or automatic transaxle in P

(Park), apply your brakes and hold the brake pedal down while you:
- Start your engine;
- Shift into gear; and
- Release the parking brake.

2. Slowly remove your foot from the brake pedal.
3. Drive slowly until the trailer is clear of the chocks.
4. Stop and have someone pick up and store the chocks.

Maintenance when trailer towing

Your vehicle will need service more often when you regularly pull a trailer. Important items to pay particular attention to include engine oil, automatic transaxle fluid, axle lubricant and cooling system fluid. Brake condition is another important item to frequently check. Each item is covered in this manual, and the Index will help you find them quickly. If you're trailering, it is a good idea to review these sections before you start your trip.

Do not forget to also maintain your trailer and hitch. Follow the maintenance schedule that accompanied your trailer and check it periodically. Preferably, conduct the check at the start of each day's driving. Most importantly, all hitch nuts and bolts should be tight.

⚠ CAUTION

- **Due to higher load during trailer usage, overheating might occur in hot days or during uphill driving. If the coolant gauge indicates overheating, switch off the air conditioner and stop the vehicle in a safe area to cool down the engine.**
- **When towing check transaxle fluid more frequently.**
- **If your vehicle is not equipped with an air conditioner, you should install a condenser fan to improve engine performance when towing a trailer.**

If you decide to pull a trailer

Here are some important points if you decide to pull a trailer:
- Consider using a sway control. You can ask a hitch dealer about sway control.
- Do not do any towing with your car during its first 2,000 km (1,200 miles) in order to allow the engine to properly break in. Failure to heed this caution may result in serious engine or transaxle damage.
- When towing a trailer, Kia recommends that you consult an authorized Kia dealer/service partner on additional requirements such as a towing kit, etc.
- Always drive your vehicle at a moderate speed (less than 100 km/h (60 mph)).
- On a long uphill grade, do not exceed 70 km/h (45 mph) or the posted towing speed limit, whichever is lower.
- The chart contains important considerations that have to do with weight.

For Europe

Item		Gasoline Engine						Diesel Engine			
		Nu 2.0 MPI				Theta II 2.4 GDI		R2.0			
		2WD		AWD		2WD	AWD	2WD		AWD	
		A/T	M/T	A/T	M/T	A/T	A/T	A/T	M/T	A/T	M/T
Maximum trailer weight kg (lbs.)	Without brake system	750 (1,653)	750 (1,653)	750 (1,653)	750 (1,653)	750 (1,653)	750 (1,653)	750 (1,653)	750 (1,653)	750 (1,653)	750 (1,653)
	With brake system	1,600 (3,527)	1,900 (4,189)	1,600 (3,527)	1,900 (4,189)	1,500 (3,307)	1,500 (3,307)	1,900 (4,189)	2,200 (4,850)	1,900 (4,189)	2,200 (4,850)
Maximum permissible static vertical load on the coupling device kg (lbs)		100 (220)	100 (220)	100 (220)	100 (220)	100 (220)	100 (220)	100 (220)	100 (220)	100 (220)	100 (220)

M/T : Manual transaxle
A/T : Automatic transaxle

Weight of the trailer

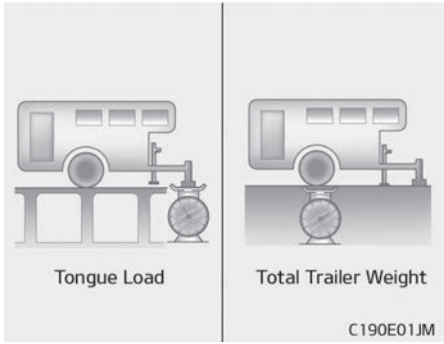

What is the maximum safe weight of a trailer? It should never weigh more than the maximum trailer weight with trailer brakes. But even that can be too heavy.
It depends on how you plan to use your trailer. For example, speed, altitude, road grades, outside temperature and how often your vehicle is used to pull a trailer are all important. The ideal trailer weight can also depend on any special equipment that you have on your vehicle.

Weight of the trailer tongue

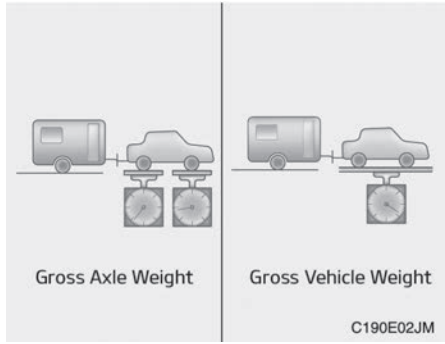

The tongue load of any trailer is an important weight to measure because it affects the total gross vehicle weight (GVW) of your vehicle. This weight includes the curb weight of the vehicle, any cargo you may carry in it, and the people who will be riding in the vehicle. And if you will tow a trailer, you must add the tongue load to the GVW because your vehicle will also be carrying that weight.
The trailer tongue should weigh a maximum of 10% of the total loaded trailer weight, within the limits of the maximum permissible trailer tongue load.

After you've loaded your trailer, weigh the trailer and then the tongue, separately, to see if the weights are proper. If they aren't, you may be able to correct them simply by moving some items around in the trailer.

⚠ WARNING

■ Trailer

- **Never load a trailer with more weight in the rear than in the front. The front should be loaded with approximately 60% of the total trailer load; the rear should be loaded with approximately 40% of the total trailer load.**
- **Never exceed the maximum weight limits of the trailer or trailer towing equipment. Improper loading can result in damage to your vehicle and/or personal injury. Check weights and loading at a commercial scale or highway patrol office equipped with scales.**
- **An improperly loaded trailer can cause loss of vehicle control.**

✻ NOTICE

With increasing altitude the engine performance decreases. From 1,000 m above sea level and for every 1,000 m thereafter 10% of vehicle/trailer weight (trailer weighter + gross vehicle weight) must be deducted.

VEHICLE WEIGHT

This section will guide you in the proper loading of your vehicle and/or trailer, to keep your loaded vehicle weight within its design rating capability, with or without a trailer. Properly loading your vehicle will provide maximum return of the vehicle design performance. Before loading your vehicle, familiarize yourself with the following terms for determining your vehicle's weight ratings, with or without a trailer, from the vehicle's specifications and the certification label:

Base curb weight

This is the weight of the vehicle including a full tank of fuel and all standard equipment. It does not include passengers, cargo, or optional equipment.

Vehicle curb weight

This is the weight of your new vehicle when you picked it up from your dealer plus any aftermarket equipment.

Cargo weight

This figure includes all weight added to the Base Curb Weight, including cargo and optional equipment.

GAW (Gross axle weight)

This is the total weight placed on each axle (front and rear) - including vehicle curb weight and all payload.

GAWR (Gross axle weight rating)

This is the maximum allowable weight that can be carried by a single axle (front or rear). These numbers are shown on the certification label. The total load on each axle must never exceed its GAWR.

GVW (Gross vehicle weight)

This is the Base Curb Weight plus actual Cargo Weight plus passengers.

GVWR (Gross vehicle weight rating)

This is the maximum allowable weight of the fully loaded vehicle (including all options, equipment, passengers and cargo). The GVWR is shown on the certification label.

Overloading

⚠ WARNING

■ Vehicle weight

The gross axle weight rating (GAWR) and the gross vehicle weight rating (GVWR) for your vehicle are on the certification label attached to the driver's (or front passenger's) door. Exceeding these ratings can cause an accident or vehicle damage. You can calculate the weight of your load by weighing the items (and people) before putting them in the vehicle. Be careful not to overload your vehicle.

What to do in an emergency

Road warning 7-02
Hazard warning flasher 7-02
In case of an emergency while driving 7-03
If the engine stalls at a crossroad or crossing 7-03
If you have a flat tire while driving 7-03
If engine stalls while driving 7-03
If the engine will not start 7-04
If the engine doesn't turn over or turns over slowly 7-04
If the engine turns over normally but does not start 7-04
Emergency starting 7-05
Jump starting 7-05
Push-starting 7-06
If the engine overheats 7-07
Tire Pressure Monitoring System (TPMS) 7-08
Check tire pressure 7-08
Low tire pressure telltale 7-09
Low tire pressure position telltale 7-09
TPMS (Tire pressure monitoring system) malfunction indicator 7-11
Changing a tire with TPMS 7-11
If you have a flat tire (with spare tire) 7-14
Jack and tools 7-14
Removing and storing the spare tire 7-15
Changing tires 7-15
Jack label 7-21
EC declaration of conformity for jack 7-22
Towing 7-23
Towing service 7-23
Removable towing hook 7-24
Emergency towing 7-24
Emergency commodity 7-27
Fire extinguisher 7-27
First aid kit 7-27
Triangle reflector 7-27
Tire pressure gauge 7-27

ROAD WARNING

Hazard warning flasher

■ Type A

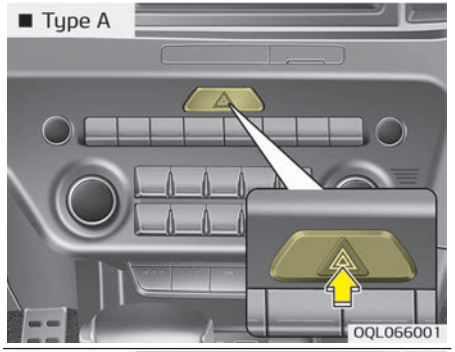

■ Type B

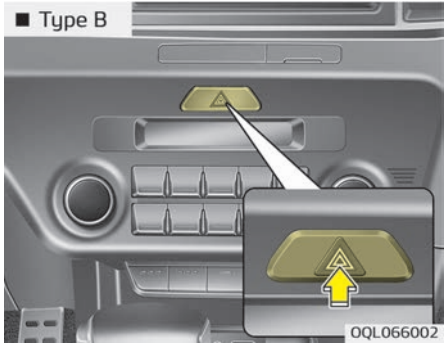

The hazard warning flasher serves as a warning to other drivers to exercise extreme caution when approaching, overtaking, or passing your vehicle.
It should be used whenever emergency repairs are being made or when the vehicle is stopped near the edge of a roadway.
Depress the flasher switch with the ignition switch in any position. The flasher switch is located in the center console switch panel. All turn signal lights will flash simultaneously.

- The hazard warning flasher operates whether your vehicle is running or not.
- The turn signals do not work when the hazard flasher is on.
- Care must be taken when using the hazard warning flasher while the vehicle is being towed.

IN CASE OF AN EMERGENCY WHILE DRIVING

If the engine stalls at a crossroad or crossing

- If the engine stalls at a crossroad or crossing, set the shift lever in the N (Neutral) position and then push the vehicle to a safe place.
- If your vehicle has a manual transaxle not equipped with an ignition lock switch, the vehicle can move forward by shifting to the 2 (second) or 3 (third) gear and then turning the starter without depressing the clutch pedal.

If you have a flat tire while driving

If a tire goes flat while you are driving:

1. Take your foot off the accelerator pedal and let the vehicle slow down while driving straight ahead. Do not apply the brakes immediately or attempt to pull off the road as this may cause a loss of control. When the vehicle has slowed down to such a speed that it is safe to do so, brake carefully and pull off the road. Drive off the road as far as possible and park on a firm level ground. If you are on a divided highway, do not park in the median area between the two traffic lanes.
2. When the vehicle is stopped, turn on your emergency hazard flashers, set the parking brake and put the transaxle in P (automatic transaxle) or reverse (manual transaxle).
3. Have all passengers get out of the vehicle. Be sure they all get out on the side of the vehicle that is away from traffic.
4. When changing a flat tire, follow the instructions provided later in this section in "If you have a flat tire (with spare tire if equipped)" on page 7-14.

If engine stalls while driving

1. Reduce your speed gradually, keeping a straight line. Move cautiously off the road to a safe place.
2. Turn on your emergency flashers.
3. Try to start the engine again. If your vehicle does not start, consult a professional workshop. Kia recommends to consult an authorized Kia dealer/service partner.

IF THE ENGINE WILL NOT START

If the engine doesn't turn over or turns over slowly

1. If your vehicle has an automatic transaxle, be sure the shift lever is in N (Neutral) or P (Park) and the emergency brake is set.
2. Check the battery connections to be sure they are clean and tight.
3. Turn on the interior light. If the light dims or goes out when you operate the starter, the battery is discharged.
4. Check the starter connections to be sure they are securely tightened.
5. Do not push or pull the vehicle to start it. See instructions for "Jump starting" on page 7-05.

⚠ WARNING

If the engine will not start, do not push or pull the vehicle to start it. This could result in a collision or cause other damage. In addition, push or pull starting may cause the catalytic converter to be overloaded and create a fire hazard.

If the engine turns over normally but does not start

1. Check the fuel level.
2. With the ignition switch in the LOCK position, check all connectors at the ignition coils and spark plugs. Reconnect any that may be disconnected or loose.
3. Check the fuel line in the engine compartment.
4. If the engine still does not start, call a professional workshop. Kia recommends to call an authorized Kia dealer/service partner.

EMERGENCY STARTING

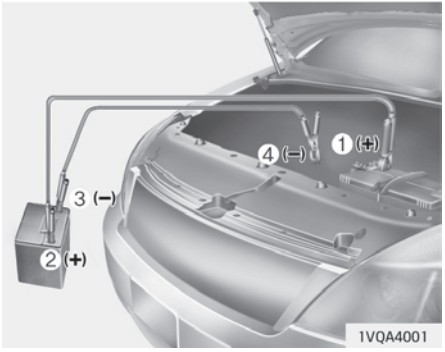

Connect cables in numerical order and disconnect in reverse order.

Jump starting

Jump starting can be dangerous if it's done incorrectly. Therefore, to avoid harm to yourself or damage to your vehicle or battery, follow the jump starting procedures. If in doubt, we strongly recommend that you have a competent technician or towing service jump start your vehicle.

⚠ CAUTION

Use only a 12-volt jumper system. You can damage a 12-volt starting motor, ignition system, and other electrical parts beyond repair by use of a 24-volt power supply (either two 12-volt batteries in series or a 24-volt motor generator set).

⚠ WARNING

■ Battery

Never attempt to check the electrolyte level of the battery as this may cause the battery to rupture or explode causing serious injury.

⚠ WARNING

■ Battery

(Continued)

(Continued)

- **Keep all flames or sparks away from the battery. The battery produces hydrogen gas which may explode if exposed to flame or sparks.**
  If these instructions are not followed exactly, serious personal injury and damage to the vehicle may occur! If you are not sure how to follow this procedure, seek qualified assistance. Automobile batteries contain sulfuric acid. This is poisonous and highly corrosive. When jump starting, wear protective glasses and be careful not to get acid on yourself, your clothing or on the vehicle.
- **Do not attempt to jump start the vehicle if the discharged battery is frozen or if the electrolyte level is low; the battery may rupture or explode.**
- **Do not allow the (+) and (–) jumper cables to touch. It may cause sparks.**
- **The battery may rupture or explode when you jump start with a low or frozen battery.**

Jump starting procedure

1. Make sure the booster battery is 12-volt and that its negative terminal is grounded.
2. If the booster battery is in another vehicle, do not allow the vehicles come in contact.
3. Turn off all unnecessary electrical loads.
4. Connect the jumper cables in the exact sequence shown in the illustration. First connect one end of a jumper cable to the positive terminal of the discharged battery (1), then connect the other end to the positive terminal on the booster battery (2).
   Proceed to connect one end of the other jumper cable to the negative terminal of the booster battery (3), then the other end to a solid, stationary, metallic point (for example, the engine lifting bracket) away from the battery (4). Do not connect it to or near any part that moves when the engine is cranked.
   Do not allow the jumper cables to contact anything except the correct battery terminals or the correct ground. Do not lean over the battery when making connections.

⚠ CAUTION

■ Battery cables

Do not connect the jumper cable from the negative terminal of the booster battery to the negative terminal of the discharged battery.
This can cause the discharged battery to overheat and crack, releasing battery acid.
Make sure to connect one end of the jumper cable to the negative terminal of the booster battery, and the other end to a metallic point, far away from the battery.

5. Start the engine of the vehicle with the booster battery and let it run at 2,000 rpm, then start the engine of the vehicle with the discharged battery.

If the cause of your battery discharging is not apparent, have the system checked by a professional workshop. Kia recommends to visit an authorized Kia dealer/service partner.

Push-starting

Your manual transaxle-equipped vehicle should not be push-started because it might damage the emission control system.
Vehicles equipped with automatic transaxle cannot be push-started.
Follow the directions in this section for jump-starting.

⚠ WARNING

Never tow a vehicle to start it because the sudden surge forward when the engine starts could cause a collision with the tow vehicle.

IF THE ENGINE OVERHEATS

If your temperature gauge indicates overheating, you will experience a loss of power, or hear loud pinging or knocking, the engine is probably too hot. If this happens, you should:

1. Pull off the road and stop as soon as it is safe to do so.
2. Place the shift lever in P (automatic transaxle) or neutral (manual transaxle) and set the parking brake. If the air conditioning is on, turn it off.
3. If engine coolant is running out under the vehicle or steam is coming out from the hood, stop the engine. Do not open the hood until the coolant has stopped running or the steaming has stopped. If there is no visible loss of engine coolant and no steam, leave the engine running and check to be sure the engine cooling fan is operating. If the fan is not running, turn the engine off.
4. Check to see if the water pump drive belt is missing. If it is not missing, check to see that it is tight.
   If the drive belt seems to be satisfactory, check for coolant leaking from the radiator, hoses or under the vehicle. (If the air conditioning had been in use, it is normal for cold water to be draining from it when you stop).

⚠ WARNING

While the engine is running, keep hair, hands and clothing away from moving parts such as the fan and drive belts to prevent injury.

5. If the water pump drive belt is broken or engine coolant is leaking out, stop the engine immediately and call a professional workshop. Kia recommends to call an authorized Kia dealer/service partner.

⚠ WARNING

Do not remove the radiator cap when the engine is hot. This can allow coolant to blow out of the opening and cause serious burns.

6. If you cannot find the cause of the overheating, wait until the engine temperature has returned to normal. Then, if coolant has been lost, carefully add coolant to the reservoir to bring the fluid level in the reservoir up to the halfway mark.
7. Proceed with caution, keeping alert for further signs of overheating. If overheating happens again, call a professional workshop. Kia recommends to call an authorized Kia dealer/service partner.

⚠ CAUTION

- **Serious loss of coolant indicates there is a leak in the cooling system. In this case, have the system checked by a professional workshop. Kia recommends to visit an authorized Kia dealer/service partner.**
- **When the engine overheats from low engine coolant, suddenly adding engine coolant may cause cracks in the engine. To prevent damage, add engine coolant slowly in small quantities.**

TIRE PRESSURE MONITORING SYSTEM (TPMS) (IF EQUIPPED)



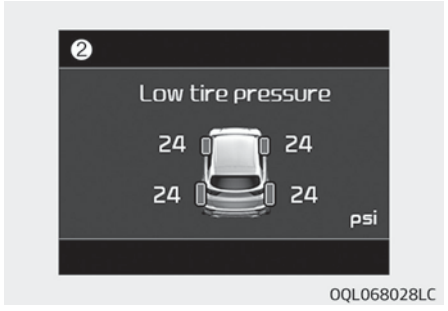

1. Low tire pressure telltale
2. Low tire pressure position telltale (Shown on the LCD display)

Check tire pressure

- You can check the tire pressure in the information mode on the cluster.
  - Refer to “User settings mode” on page 4-67.
- Tire pressure is displayed 1~2 minutes later after driving.
- If tire pressure is not displayed when the vehicle is stopped, “Drive to display” message displays. After driving, check the tire pressure.
- You can change the tire pressure unit in the user settings mode on the cluster.
  - psi, kPa, bar (Refer to “User settings mode” on page 4-67).

Each tire, including the spare (if provided), should be checked monthly when cold and inflated to the inflation pressure recommended by the vehicle manufacturer on the vehicle placard or tire inflation pressure label.
(If your vehicle has tires of a different size than the size indicated on the vehicle placard or tire inflation pressure label, you should determine the proper tire inflation pressure for those tires.)

As an added safety feature, your vehicle has been equipped with a tire pressure monitoring system (TPMS) that illuminates a low tire pressure telltale when one or more of your tires is significantly under-inflated. Accordingly, when the low tire pressure telltale illuminates, you should stop and check your tires as soon as possible, and inflate them to the proper pressure. Driving on a significantly under-inflated tire causes the tire to overheat and can lead to tire failure. Under-inflation also reduces fuel efficiency and tire tread life, and may affect the vehicle’s handling and stopping ability.
Please note that the TPMS is not a substitute for proper tire maintenance, and it is the driver’s responsibility to maintain correct tire pressure, even if under-inflation has not reached the level to trigger illumination of the TPMS low tire pressure telltale.

Your vehicle has also been equipped with a TPMS malfunction indicator to indicate when the system is not operating properly. The TPMS malfunction indicator is combined with the low tire pressure telltale. When the system detects a malfunction, the telltale will flash for approximately 1 minute and then remain continuously illuminated. This sequence will continue upon subsequent vehicle start-ups as long as the malfunction exists. When the TPMS malfunction indicator remains illuminated after blinking for approximately 1 minute, the system may not be able to detect or signal low tire pressure as intended.
TPMS malfunctions may occur for a variety of reasons, including the installation of replacement or alternate tires or wheels on the vehicle that prevent the TPMS from functioning properly. Always check the TPMS malfunction telltale after replacing one or more tires or wheels on your vehicle to ensure that the replacement or alternate tires and wheels allow the TPMS to continue to function properly.

✻ NOTICE

If any of the below happens, have the system checked by a professional workshop. Kia recommends to visit an authorized Kia dealer/service partner.

1. The low tire pressure telltale / TPMS malfunction indicator do not illuminate for 3 seconds when the ignition switch is turned to the ON position or engine is running.
2. The TPMS malfunction indicator remains illuminated after blinking for approximately 1 minute.
3. The Low tire pressure position telltale remains illuminated.

Low tire pressure telltale



Low tire pressure position telltale

■ Low tire pressure telltale



WBH-11

■ Low tire pressure information

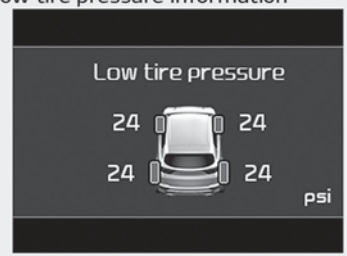

OQL068028LD

When the tire pressure monitoring system warning indicators are illuminated and warning massage displayed on the cluster LCD display, one or more of your tires is significantly under-inflated. The low tire pressure position telltale light will indicate which tire is significantly under-inflated by illuminating the corresponding position light.
If either telltale illuminates, immediately reduce your speed, avoid hard cornering and anticipate increased stopping distances. You should stop and check your tires as soon as possible. Inflate the tires to the proper pressure as indicated on the vehicle's placard or tire inflation pressure label located on the driver's side center pillar outer panel. If you cannot reach a service station or if the tire cannot hold the newly added air, replace the low pressure tire with a spare tire.
If you drive the vehicle for about 10 minutes at speeds above 25 km/h after replacing the low pressure tire with the spare tire, one of the following will happen:

- The TPMS malfunction indicator may blink for approximately 1 minute and then remain continuously illuminated because the TPMS sensor is not mounted on the spare wheel. (changed tire equipped with a sensor not in the vehicle)
- The TPMS malfunction indicator will remain continuously illuminated while driving because the TPMS sensor is not mounted on the spare wheel. (changed tire equipped with a sensor in the vehicle)

⚠ CAUTION

- **In winter or cold weather, the low tire pressure telltale may illuminate if the tire pressure was adjusted to the recommended tire inflation pressure in warm weather. It does not mean your TPMS is malfunctioning because the decreased temperature leads to a lowering of tire pressure.**

(Continued)

(Continued)

- **When you drive your vehicle from a warm area to a cold area or from a cold area to a warm area, or the outside temperature is higher or lower, you should check the tire inflation pressure and adjust the tires to the recommended tire inflation pressure.**
- **When filling tires with more air, conditions to turn off the low tire pressure telltale may not be met. This is because a tire inflator has a margin of error in performance. The low tire pressure telltale will be turned off if the tire pressure is above the recommended tire inflation pressure.**

⚠ WARNING

■ Low pressure damage

Significantly low tire pressure makes the vehicle unstable and can contribute to loss of vehicle control and increased braking distances.

(Continued)

(Continued)

Continued driving on low pressure tires can cause the tires to overheat and fail.

TPMS (Tire pressure monitoring system) malfunction indicator



The TPMS malfunction indicator will illuminate after it blinks for approximately one minute when there is a problem with the Tire Pressure Monitoring System.
In this case, have the system checked by a professional workshop to determine the cause of the problem. Kia recommends to visit an authorized Kia dealer/service partner.

✻ NOTICE

If there is a malfunction with the TPMS, the low tire pressure position telltale will not be displayed even though the vehicle has an underinflated tire.

⚠ CAUTION

- **The TPMS malfunction indicator may blink for approximately 1 minute and then remain continuously illuminated if the vehicle is moving around electric power supply cables or radios transmitter such as at police stations, government and public offices, broadcasting stations, military installations, airports, or transmitting towers, etc. This can interfere with normal operation of the Tire Pressure Monitoring System (TPMS).**
- **The TPMS malfunction indicator may blink for approximately 1 minute and then remain continuously illuminated if snow chains are used or some separate electronic devices such as notebook computer, mobile charger, remote starter or navigation etc., are used in the vehicle.**
  This can interfere with normal operation of the Tire Pressure Monitoring System (TPMS).

Changing a tire with TPMS

If you have a flat tire, the low Tire Pressure and Position telltales will come on. In this case, have the system checked by a professional workshop. Kia recommends to visit an authorized Kia dealer/service partner.

⚠ CAUTION

We recommend that you use the sealant approved by Kia.
The sealant on the tire pressure sensor and wheel shall be eliminated when you replace the tire with a new one.

Each wheel is equipped with a tire pressure sensor mounted inside the tire behind the valve stem. You must use TPMS specific wheels. Have your tires serviced by a professional workshop. Kia recommends to visit an authorized Kia dealer/service partner.
If you drive the vehicle for about 10 minutes at speeds above 25 km/h after replacing the low pressure tire with the spare tire, one of the following will happen:

- The TPMS malfunction indicator may blink for approximately 1 minute and then remain continuously illuminated because the TPMS sensor is not mounted on the spare wheel. (changed tire equipped with a sensor not in the vehicle)
- The TPMS malfunction indicator will remain continuously illuminated while driving because the TPMS sensor is not mounted on the spare wheel. (changed tire equipped with a sensor in the vehicle)

You may not be able to identify a low tire by simply looking at it. Always use a good quality tire pressure gauge to measure the tire's inflation pressure. Please note that a tire that is hot (from being driven) will have a higher pressure measurement than a tire that is cold (from sitting stationary for at least 3 hours and driven less than 1 mile (1.6 km) during that 3 hour period).
Allow the tire to cool before measuring the inflation pressure. Always be sure the tire is cold before inflating to the recommended pressure.

A cold tire means the vehicle has been sitting for 3 hours and driven for less than 1.6km (1 mile) in that 3 hour period.

⚠ CAUTION

We recommend that you use the sealant approved by Kia if your vehicle is equipped with a Tire Pressure Monitoring System. The liquid sealant can damage the tire pressure sensors.

⚠ WARNING

■ TPMS

- **The TPMS cannot alert you to severe and sudden tire damage caused by external factors such as nails or road debris.**
- **If you feel any vehicle instability, immediately take your foot off the accelerator, apply the brakes gradually and with light force, and slowly move to a safe position off the road.**

⚠ WARNING

■ Protecting TPMS

Tampering with, modifying, or disabling the Tire Pressure Monitoring System (TPMS) components may interfere with the system's ability to warn the driver of low tire pressure conditions and/or TPMS malfunctions. Tampering with, modifying, or disabling the Tire Pressure Monitoring System (TPMS) components may void the warranty for that portion of the vehicle.

⚠ WARNING

■ For EUROPE

- **Do not modify the vehicle, it may interfere with the TPMS function.**
- **The wheels on the market do not have a TPMS sensor.**
  For your safety, use parts for replacement from a professional workshop. Kia recommends to visit an authorized Kia dealer/service partner.

(Continued)

(Continued)

- **If you use the wheels on the market, use a TPMS sensor approved by an authorized Kia dealer.**
  If your vehicle is not equipped with a TPMS sensor or TPMS does not work properly, you may fail the periodic vehicle inspection conducted in your country.

❋ All vehicles sold in the EUROPE market during below period must be equipped with TPMS.
- New model vehicle:
Nov. 1, 2012 ~
- Current model vehicle:
Nov. 1, 2014~ (Based on vehicle registrations)

IF YOU HAVE A FLAT TIRE (WITH SPARE TIRE)

Jack and tools

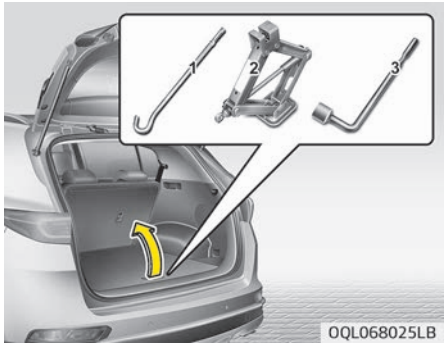

The jack, jack handle, wheel lug nut wrench are stored in the luggage compartment.
Pull up the luggage box cover to reach this equipment.

1. Jack handle
2. Jack
3. Wheel lug nut wrench

Jacking instructions

The jack is provided for emergency tire changing only.

To prevent the jack from "rattling" while the vehicle is in motion, store it properly.
Follow jacking instructions to reduce the possibility of personal injury.

⚠ WARNING

■ Changing tires

- **Never attempt vehicle repairs in the traffic lanes of a public road or highway.**
- **Always move the vehicle completely off the road and onto the shoulder before trying to change a tire. The jack should be used on firm level ground. If you cannot find a firm level place off the road, call a towing service company for assistance.**
- **Be sure to use the correct front and rear jacking positions on the vehicle; never use the bumpers or any other part of the vehicle for jacking support.**
- **The vehicle can roll off the jack causing serious injury or death.**

(Continued)

(Continued)

- **Do not get under a vehicle that is supported by a jack.**
- **Do not start or run the engine while the vehicle is on the jack.**
- **Do not allow anyone to remain in the vehicle while it is on the jack.**
- **Make sure any children present are in a secure place away from the road and from the vehicle to be raised with the jack.**

Removing and storing the spare tire



Turn the tire hold-down wing bolt counterclockwise.
Store the tire in the reverse order of removal.
To prevent the spare tire and tools from "rattling" while the vehicle is in motion, store them properly.



If it is hard to loosen the tire hold-down wing bolt by hand, you can loosen it easily using the jack handle.

1. Put the jack handle (1) inside of the tire hold-down wing bolt.
2. Turn the tire hold-down wing bolt counterclockwise with the jack handle

⚠ WARNING

Ensure the spare tire retainer is properly aligned with the center of
(Continued)

(Continued)

the spare tire to prevent the spare tire from "rattling".
Otherwise, it may cause the spare tire to fall off the carrier and lead to an accident.

Changing tires

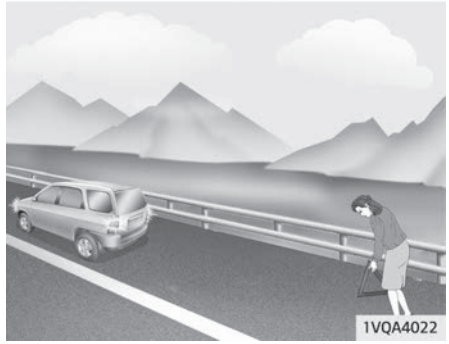

1. Park on a level surface and apply the parking brake firmly.
2. Shift the shift lever into R (Reverse) with manual transaxle or P (Park) with automatic transaxle.

3. Activate the hazard warning flasher.



4. Remove the wheel lug nut wrench, jack, jack handle, and spare tire from the vehicle.
5. Block both the front and rear of wheel that is diagonally opposite the jack position.

⚠ WARNING

■ Changing a tire
(Continued)

(Continued)

- **To prevent vehicle movement while changing a tire, always set the parking brake fully, and always block the wheel diagonally opposite the wheel being changed.**
- **We recommend that the wheels of the vehicle be chocked, and that no person remain in a vehicle that is being jacked.**



6. Loosen the wheel lug nuts counterclockwise one turn each, but do not remove any nut until the tire has been raised off the ground.

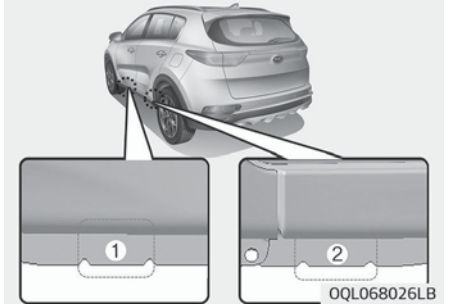

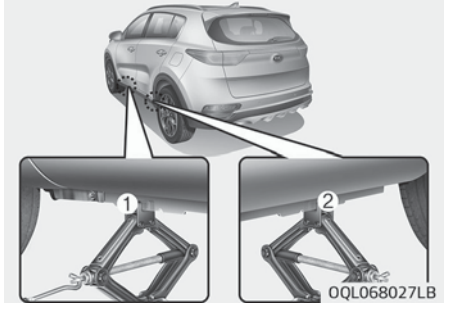

7. Place the jack at the front (1) or rear (2) jacking position closest to the tire you are changing. Place the jack at the designated locations under the frame. The jacking positions are plates welded to the frame with two tabs and a raised dot to index with the jack.

⚠ WARNING

■ Jack location

To reduce the possibility of injury, be sure to use only the jack provided with the vehicle and in the correct jack position; never use any other part of the vehicle for jack support.



8. Insert the jack handle into the jack and turn it clockwise, raising the vehicle until the tire just clears the ground. This measurement is approximately 30 mm (1.2 in). Before removing the wheel lug nuts, make sure the vehicle is stable and that there is no chance for movement or slippage.
9. Loosen the wheel nuts and remove them with your fingers. Slide the wheel off the studs and lay it flat so it cannot roll away. To put the wheel on the hub, pick up the spare tire, line up the holes with the studs and slide the wheel onto them.
   If this is difficult, tip the wheel slightly and get the top hole in the wheel lined up with the top stud. Then jiggle the wheel back and forth until the wheel can be slid over the other studs.

⚠ WARNING

Wheels may have sharp edges. Handle them carefully to avoid possible severe injury. Before putting the wheel into place, be sure that there is nothing on the hub or wheel (such as mud, tar, gravel, etc.) that interferes with the wheel from fitting solidly against the hub.
If there is, remove it. If there is no good contact on the mounting surface between the wheel and hub,
(Continued)

(Continued)

the wheel nuts could come loose and cause the loss of a wheel. Loss of a wheel may result in loss of control of the vehicle. This may cause serious injury or death.

10. To reinstall the wheel, hold it on the studs, put the wheel nuts on the studs and tighten them finger tight. Jiggle the tire to be sure it is completely seated, then tighten the nuts as much as possible with your fingers again.
11. Lower the vehicle to the ground by turning the wheel nut wrench counterclockwise.



Then position the wrench as shown in the drawing and tighten the wheel nuts. Be sure the socket is seated completely over the nut. Do not stand on the wrench handle or use an extension pipe over the wrench handle. Go around the wheel tightening every other nut until they are all tight. Then double-check each nut for tightness. After changing wheels, have the system checked by a professional workshop. Kia recommends to visit an authorized Kia dealer/service partner.

Wheel nut tightening torque:

Steel wheel & aluminum alloy wheel: 11~13 kg·m (79~94 lb·ft)

If you have a tire gauge, remove the valve cap and check the air pressure. If the pressure is lower than recommended, drive slowly to the nearest service station and inflate to the correct pressure. If it is too high, adjust it until it is correct. Always reinstall the valve cap after checking or adjusting tire pressure. If the cap is not replaced, air may leak from the tire. If you lose a valve cap, buy another and install it as soon as possible.

After you have changed wheels, always secure the flat tire in its place and return the jack and tools to their proper storage locations.

⚠ CAUTION

Your vehicle has metric threads on the wheel studs and nuts. Make certain during wheel removal that the same nuts that were removed are reinstalled – or, if replaced, that nuts with metric threads and the same chamfer configuration are used. Installation of a non-metric thread nut on a metric stud or vice-versa will not secure the wheel to the hub properly and will damage the stud so that it must be replaced.

(Continued)

(Continued)

Note that most lug nuts do not have metric threads. Be sure to use extreme care in checking for thread style before installing aftermarket lug nuts or wheels.
If in doubt, consult a professional workshop. Kia recommends to consult an authorized Kia dealer/service partner.

⚠ WARNING

■ Wheel studs

If the studs are damaged, they may lose their ability to retain the wheel. This could lead to the loss of the wheel and a collision resulting in serious injuries.

To prevent the jack, jack handle, wheel lug nut wrench and spare tire from rattling while the vehicle is in motion, store them properly.

⚠ WARNING

■ Inadequate spare tire pressure

Check the inflation pressures as soon as possible after installing the spare tire. Adjust it to the specified pressure, if necessary. Refer to "Tires and wheels" on page 9-09.

Important - use of compact spare tire (if equipped)

Your vehicle is equipped with a compact spare tire. This compact spare tire takes up less space than a regular-size tire. This tire is smaller than a conventional tire and is designed for temporary use only.

⚠ CAUTION

- **You should drive carefully when the compact spare is in use. The compact spare should be replaced by the proper conventional tire and rim at the first opportunity.**

(Continued)

(Continued)

- **The operation of this vehicle is not recommended with more than one compact spare tire in use at the same time.**

⚠ WARNING

The compact spare tire is for emergency use only. Do not operate your vehicle on this compact spare at the speed over 80 km/h. The original tire should be repaired or replaced as soon as possible to avoid failure of the spare possibly leading to personal injury or death.

The compact spare should be inflated to 420 kPa.

✻ NOTICE

Check the inflation pressure after installing the spare tire. Adjust it to the specified pressure, as necessary.

When using a compact spare tire, observe the following precautions:

- Under no circumstances should you exceed 80 km/h; a higher speed could damage the tire.
- Ensure that you drive slowly enough to avoid all hazards. Any road hazard, such as a pothole or debris, could seriously damage the compact spare.
- Any continuous road use of this tire could result in tire failure, loss of vehicle control, and possible personal injury.
- Do not exceed the vehicle's maximum load rating or the load-carrying capacity shown on the sidewall of the compact spare tire.
- Avoid driving over obstacles. The compact spare tire diameter is smaller than the diameter of a conventional tire and reduces the ground clearance approximately 2.5 cm, which could result in damage to the vehicle.
- Do not take the vehicle through an automatic car wash while the compact spare tire is installed.
- Do not use tire chains on the temporary compact tire. Because of the smaller size, a tire chain will not fit properly. This could damage the vehicle and result in loss of the chain.

- Temporary compact tire should not be installed on the front axle if the vehicle must be driven in snow or on ice.
- Do not use the temporary compact tire on any other vehicle because this tire has been designed especially for your vehicle.
- The temporary compact tire tread life is shorter than a regular tire. Inspect your temporary compact tire regularly and replace worn compact spare tires with the same size and design, mounted on the same wheel.
- The temporary compact tire should not be used on any other wheels, nor should standard tires, snow tires, wheel covers or trim rings be used with the temporary compact spare wheel. If such use is attempted, damage to these items or other car components may occur.
- Do not use more than one temporary compact tire at a time.
- Do not tow a trailer while the temporary compact tire is installed

Jack label

■ Example

• Type A

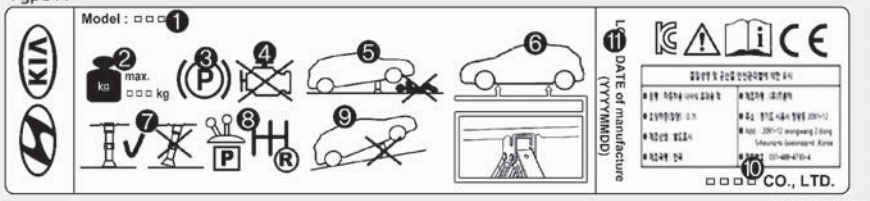

OHYK064001

• Type B

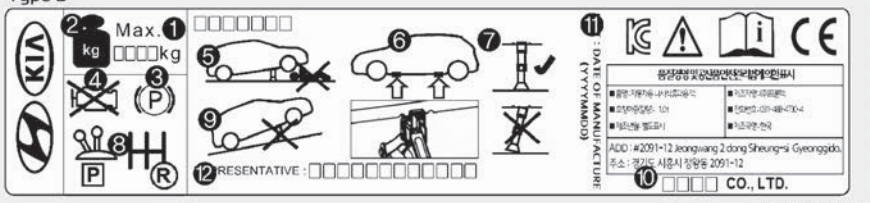

OHYK064005

• Type C



OHYK064002

❊ The actual Jack label in the vehicle may differ from the illustration. For more detailed specifications, refer to the label attached to the jack.

1. Model Name
2. Maximum allowable load
3. When using the jack, set your parking brake.
4. When using the jack, stop the engine.
5. Do not get under a vehicle that is supported by a jack.
6. The designated locations under the frame
7. When supporting the vehicle, the base plate of jack must be vertical under the lifting point.
8. Shift into Reverse gear on vehicles with manual transmission or move the shift lever to the P position on vehicles with automatic transmission.
9. The jack should be used on firm level ground.
10. Jack manufacturer
11. Production date
12. Representative company and address

EC declaration of conformity for jack

CE

EC Declaration of Conformity
according to EC Machinery Directive 2006/42/EC

We, **FRONTEC CO., LTD.**
2091-12 Jeongwang 2(i)-dong Siheung-si Gyeonggi-d ,Korea
declare under our sole responsibility that the product

Product : JACK-ASSY
Type Designation(s) : 1200KG, 1000KG, 800KG, 700KG, 500KG
Serial No. : N/A (prototype)
Year of Manufacture : 2013
to which this declaration relates is in conformity with the following standard(s) or other normative document(s);

EN ISO12100 (2010)	Safety of machinery - General principles for design – Risk assessment and risk reduction
EN 1494/A1 (2008)	Mobile or movable jacks and associated lifting equipment

following the provisions of Directive(s);

2006/42/EC	Directive on the approximation of the laws of Member States relating to machinery (OJ L157 Jun, 9, 2006)

Siheung-si Gyeonggi-d ,Korea / 15.07.2013 SOO HONG, MIN President
(Place and date of issue)(Name and signature or equivalent making of authorized person)

* T.C.F Compiling Location:
- Address: PRIBORSKA 280, 739 42 FRYDEK MISTEK,CHLEBOVICE, CZECH REPUBLIC
- Team: Purchase team
- Company name: HANWHA L&C CZECH s.r.o

0UM074110L

TOWING

Towing service

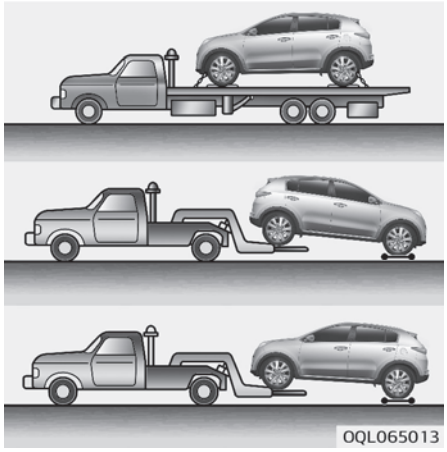

If emergency towing is necessary, we recommend having it done by an authorized Kia dealer or a commercial tow-truck service. Proper lifting and towing procedures are necessary to prevent damage to the vehicle. The use of wheel dollies (1) or flatbed is recommended.

On AWD vehicles, your vehicle must be towed with a wheel lift and dollies or flatbed equipment with all the wheels off the ground.

⚠ CAUTION

The AWD vehicle should never be towed with the wheels on the ground. This can cause serious damage to the transaxle or the AWD system.

On FWD vehicles, it is acceptable to tow the vehicle with the rear wheels on the ground (without dollies) and the front wheels off the ground.
If any of the loaded wheels or suspension components are damaged or the vehicle is being towed with the front wheels on the ground, use a towing dolly under the front wheels.
When being towed by a commercial tow truck and wheel dollies are not used, the front of the vehicle should always be lifted, not the rear.





⚠ CAUTION

- **Do not tow the vehicle backwards with the front wheels on the ground as this may cause damage to the vehicle.**
- **Do not tow with sling-type equipment. Use wheel lift or flatbed equipment.**

When towing your vehicle in an emergency without wheel dollies:

1. Set the ignition switch in the ACC position.

2. Place the transaxle shift lever in N (Neutral).
3. Release the parking brake.

⚠ CAUTION

Failure to place the transaxle shift lever in N (Neutral) may cause internal damage to the transaxle.

Removable towing hook (if equipped)

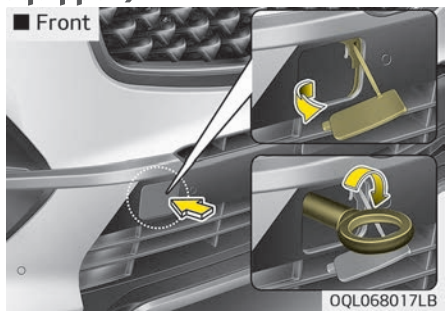

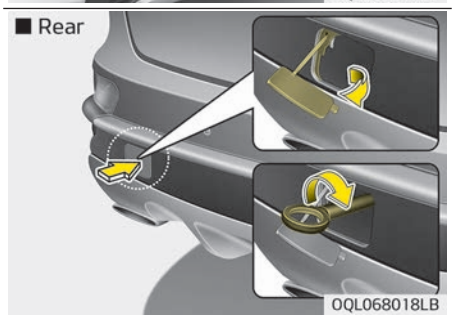

1. Open the tailgate, and remove the towing hook from the tool case.
2. Remove the hole cover pressing the upper (front) / lower (rear) part of the cover on the bumper.
3. Install the towing hook by turning it clockwise into the hole until it is fully secured.
4. Remove the towing hook and install the cover after use.

Emergency towing

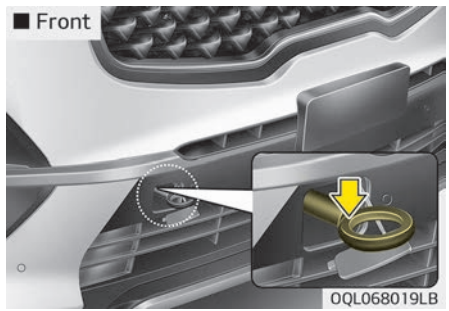

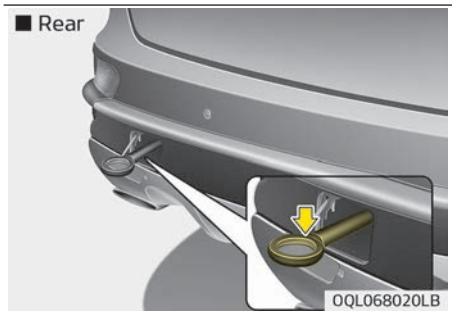

If towing is necessary, we recommend you to have it done by an authorized Kia dealer or a commercial tow truck service.

If towing service is not available in an emergency, your vehicle may be temporarily towed using a cable or chain secured to the emergency towing hook under the front (or rear) of the vehicle. Use extreme caution when towing the vehicle. A driver must be in the vehicle to steer it and operate the brakes.

Towing in this manner may be done only on hard-surfaced roads for a short distance and at low speed. Also, the wheels, axles, power train, steering and brakes must all be in good condition.

- Do not use the tow hooks to pull a vehicle out of mud, sand or other conditions from which the vehicle cannot be driven out under its own power.
- Avoid towing a vehicle heavier than the vehicle doing the towing.
- The drivers of both vehicles should communicate with each other frequently.

⚠ CAUTION

- **Attach a towing strap to the tow hook.**
- **Using a portion of the vehicle other than the tow hooks for towing may damage the body of your vehicle.**
- **Use only a cable or chain specifically intended for use in towing vehicles. Securely fasten the cable or chain to the towing hook provided.**

- Before emergency towing, check if the hook is not broken or damaged.
- Fasten the towing cable or chain securely to the hook.
- Do not jerk the hook. Apply it steadily and with even force.
- To avoid damaging the hook, do not pull from the side or at a vertical angle. Always pull straight ahead.

⚠ WARNING

Use extreme caution when towing the vehicle.

- **Avoid sudden starts or erratic driving maneuvers which would place excessive stress on the emergency towing hook and towing cable or chain. The hook and towing cable or chain may break and cause serious injury or damage.**
- **If the disabled vehicle is unable to be moved, do not forcibly continue the towing. We recommend that you contact an authorized Kia dealer or a commercial tow truck service for assistance.**
- **Tow the vehicle as straight ahead as possible.**
- **Keep away from the vehicle during towing.**

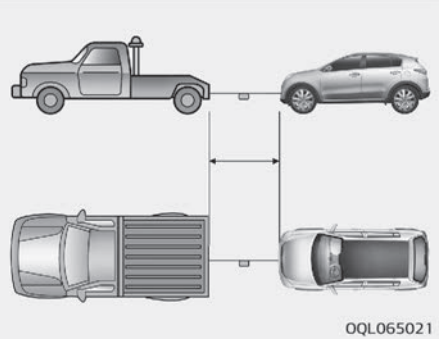

- Use a towing strap less than 5 m (16 feet) long. Attach a white or red cloth (about 30 cm (12 inches) wide) in the middle of the strap for easy visibility.
- Drive carefully so that the towing strap is not loosened during towing.

Emergency towing precautions

- Turn the ignition switch to ACC so the steering wheel isn't locked.
- Place the transaxle shift lever in N (Neutral).
- Release the parking bake.
- Press the brake pedal with more force than normal since you will have reduced brake performance.
- More steering effort will be required because the power steering system will be disabled.
- If you are driving down a long hill, the brakes may overheat and brake performance will be reduced. Stop often and let the brakes cool off.

⚠ CAUTION

■ Automatic transaxle

- **If the car is being towed with all four wheels on the ground, it can be towed only from the front. Be sure that the transaxle is in neutral. Be sure the steering is unlocked by placing the ignition switch in the ACC position. A driver must be in the towed vehicle to operate the steering and brakes.**
- **To avoid serious damage to the automatic transaxle, limit the vehicle speed to 15 km/h (10 mph) and drive less than 1.5 km (1 mile) when towing.**

(Continued)

(Continued)

- **Before towing, check the automatic transaxle for fluid leaks under your vehicle. If the automatic transaxle fluid is leaking, flatbed equipment or a towing dolly must be used.**

EMERGENCY COMMODITY

There are some emergency commodities in the vehicle to help you respond to the emergency situation.

Fire extinguisher

If there is small fire and you know how to use the fire extinguisher, take the following steps carefully.

1. Pull the pin at the top of the extinguisher that keeps the handle from being accidentally pressed.
2. Aim the nozzle toward the base of the fire.
3. Stand approximately 2.5 m (8 ft) away from the fire and squeeze the handle to discharge the extinguisher. If you release the handle, the discharge will stop.
4. Sweep the nozzle back and forth at the base of the fire. After the fire appears to be out, watch it carefully since it may re-ignite.

First aid kit

There are some items such as scissors, bandage and adhesive tape and etc. in the kit to give first aid to an injured person.

Triangle reflector

Place the triangle reflector on the road to warn oncoming vehicles during emergencies, such as when the vehicle is parked by the roadside due to any problems.

Tire pressure gauge

Tires normally lose some air in day- today use, and you may have to add a few pounds of air periodically and it is not usually a sign of a leaking tire, but of normal wear. Always check tire pressure when the tires are cold because tire pressure increases with temperature.

To check the tire pressure, take the following steps:

1. Unscrew the inflation valve cap that is located on the rim of the tire.
2. Press and hold the gauge against the tire valve. Some air will escape as you begin and more will escape if you don't press the gauge in firmly.
3. A firm non-leaking push will activate the gauge.
4. Read the tire pressure on the gauge to know whether the tire pressure is low or high.
5. Adjust the tire pressures to the specified pressure. Refer to "Tires and wheels" on page 9-09.
6. Reinstall the inflation valve cap.

Maintenance

Engine compartment....8-03
Maintenance services....8-05
Owner's responsibility....8-05
Owner maintenance precautions....8-05
Engine compartment precautions (Diesel engine)....8-06
Owner maintenance....8-08
Owner maintenance schedule....8-08
Scheduled maintenance service....8-10
Normal Maintenance Schedule - Except Europe (Including Russia)....8-11
Normal Maintenance Schedule – Except Europe (Including Russia) (continue)....8-13
Maintenance Under Severe Usage Conditions - For Gasoline Engine [Except Europe (Including Russia)]....8-19
Explanation of scheduled maintenance items....8-23
Engine oil and filter....8-23
Drive belts....8-23
Fuel filter cartridge (for diesel)....8-23
Fuel filter (for gasoline)....8-23
Fuel lines, fuel hoses and connections....8-23
Vapor hose (for gasoline engine) and fuel filler cap....8-24
Vacuum crankcase ventilation hoses....8-24
Air cleaner filter....8-24
Spark plugs (for gasoline engine)....8-24
Valve clearance (for gasoline engine)....8-24
Cooling system....8-24
Coolant....8-24
Manual transaxle fluid....8-24
Dual clutch transmission fluid....8-24
Automatic transaxle fluid....8-24
Brake hoses and lines....8-25
Brake/Clutch fluid....8-25
Parking brake....8-25
Brake discs, pads, calipers and rotors....8-25
Suspension mounting bolts....8-25
Steering gear box, linkage & boots/lower arm ball joint....8-25
Drive shafts and boots....8-25
Air conditioning refrigerant....8-25
Engine oil (Gasoline)....8-26
Checking the engine oil level....8-26
Changing the engine oil and filter....8-27
Engine oil (Diesel)....8-28
Checking the engine oil level....8-28
Changing the engine oil and filter....8-29
Engine coolant....8-30
Checking the coolant level....8-30
Changing the coolant....8-32
Brake/Clutch fluid....8-33
Checking the brake/clutch fluid level....8-33
Washer fluid....8-34
Checking the washer fluid level....8-34
Parking brake....8-35
Checking the parking brake....8-35
Fuel filter (for diesel)....8-36
Draining water from the fuel filter....8-36
Fuel filter cartridge replacement....8-36
Air cleaner....8-37
Filter replacement....8-37
Climate control air filter....8-39

Filter inspection....8-39
Wiper blades....8-40
Blade inspection....8-40
Blade replacement....8-40
Battery....8-44
For best battery service....8-44
Battery capacity label....8-45
Battery recharging....8-46
Reset items....8-46
Tires and wheels....8-48
Tire care....8-48
Recommended cold tire inflation pressures....8-48
Checking tire inflation pressure....8-49
Tire rotation....8-50
Wheel alignment and tire balance....8-51
Tire replacement....8-51
Wheel replacement....8-53
Tire traction....8-53
Tire maintenance....8-53
Tire sidewall labeling....8-53
Low aspect ratio tire....8-56
Fuses....8-58
Inner panel fuse replacement....8-60
Engine compartment fuse replacement....8-61
Fuse/relay panel description....8-63
Light bulbs....8-77
Bulb replacement precaution....8-77
Light bulb position (Front)....8-79
Light bulb position (Rear)....8-80
Light bulb position (Side)....8-81
Headlamp (High-Low beam) bulb replacement....8-81
Front turn signal lamp bulb replacement....8-82
Position lamp + DRL bulb replacement....8-82
Front fog lamp (Bulb and LED type) bulb replacement....8-83
Stop and tail lamp bulb replacement....8-83
Tail lamp (inside) bulb replacement....8-84
Stop and tail lamp (LED type) bulb replacement....8-85
Back-up lamp and Rear turn signal lamp bulb replacement....8-85
High mounted stop lamp bulb replacement....8-86
License plate light bulb replacement....8-86
Side repeater lamp (LED type) bulb replacement....8-87
Side repeater lamp (Bulb type) bulb replacement....8-87
Map lamp bulb replacement....8-87
Vanity mirror lamp bulb replacement....8-88
Room lamp bulb replacement....8-88
Personal lamp bulb replacement....8-89
Glove box lamp bulb replacement....8-89
Tailgate room lamp bulb replacement....8-89
Appearance care....8-91
Exterior care....8-91
Interior care....8-95
Emission control system....8-97
1. Crankcase emission control system....8-97
2. Evaporative emission control system....8-97
3. Exhaust emission control system....8-97
Lean NOx trap....8-99

ENGINE COMPARTMENT

■ Gasoline Engine (Nu 2.0L - MPI)



■ Gasoline Engine (Theta II 2.4L - GDI)

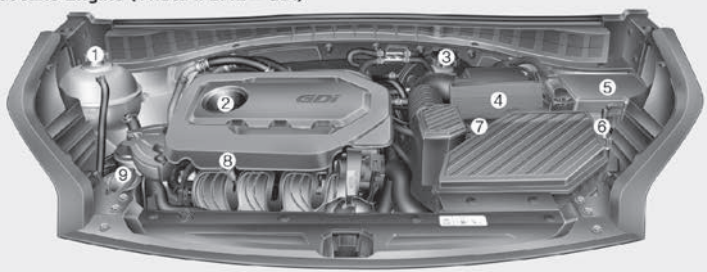

❋ The actual engine room in the vehicle may differ from the illustration.

OQLE075094/OQLE075095

1. Engine coolant reservoir
2. Engine oil filler cap
3. Brake/clutch fluid reservoir (if equipped)
4. Air cleaner
5. Fuse box
6. Negative battery terminal
7. Positive battery terminal
8. Engine oil dipstick
9. Windshield washer fluid reservoir

■ Diesel Engine (R 2.0L)



❊ The actual engine room in the vehicle may differ from the illustration.

OQL078001L

1. Engine coolant reservoir
2. Engine oil filler cap
3. Brake/clutch fluid reservoir (if equipped)
4. Air cleaner
5. Fuse box
6. Negative battery terminal
7. Positive battery terminal
8. Engine oil dipstick
9. Windshield washer fluid reservoir
10. Fuel filter cartridge

MAINTENANCE SERVICES

You should exercise the utmost care to prevent damage to your vehicle and injury to yourself whenever performing any maintenance or inspection procedures.
Inadequate, incomplete or insufficient servicing may result in operational problems with your vehicle that could lead to vehicle damage, an accident, or personal injury.

Owner's responsibility

✻ NOTICE

Maintenance Service and Record Retention are the owner's responsibility.

Have your vehicle serviced by a professional workshop. Kia recommends to visit an authorized Kia dealer/service partner.
You should retain documents that show proper maintenance has been performed on your vehicle in accordance with the scheduled maintenance service charts shown on the following pages.

You need this information to establish your compliance with the servicing and maintenance requirements of your vehicle warranties.
Detailed warranty information is provided in your Warranty & Maintenance book.
Repairs and adjustments required as a result of improper maintenance or a lack of required maintenance are not covered when your vehicle is covered by warranty.

Owner maintenance precautions

Improper or incomplete service may result in problems. This section gives instructions only for the maintenance items that are easy to perform.

✻ NOTICE

Improper owner maintenance during the warranty period may affect warranty coverage. For details, read the separate Warranty & Maintenance book provided with the vehicle. If you're unsure about any servicing or maintenance procedure, have the system serviced by a professional workshop. Kia recommends to visit an authorized Kia dealer/service partner.

(Continued)

⚠ WARNING

■ Maintenance work

- **Performing maintenance work on a vehicle can be dangerous. You can be seriously injured while performing some maintenance procedures. If you lack sufficient knowledge and experience or the proper tools and equipment to do the work, have the system serviced by a professional workshop. Kia recommends to visit an authorized Kia dealer/service partner.**

(Continued)

(Continued)

- **Working under the hood with the engine running is dangerous. It becomes even more dangerous when you wear jewelry or loose clothing. These can become entangled in moving parts and result in injury. Therefore, if you must run the engine while working under the hood, make certain that you remove all jewelry (especially rings, bracelets, watches, and necklaces) and all neckties, scarves, and similar loose clothing before getting near the engine or cooling fans.**

⚠ CAUTION

- **Do not put heavy objects or apply excessive force on top of the engine cover (if equipped) or fuel related parts.**

(Continued)

(Continued)

- **When you inspect the fuel system (fuel lines and fuel injection devices), contact a professional workshop.**
  Kia recommends to visit an authorized Kia dealer/service partner.
- **Do not drive long time with the engine cover (if equipped) removed.**
- **When checking the engine room, do not go near fire.**
  Fuel, washer fluid, etc. are flammable oils that may cause fire.
- **Before touching the battery, ignition cables and electrical wiring, you should disconnect the battery "-" terminal. You may get an electric shock from the electric current.**
- **When you remove the interior trim cover with a flat bed (-) driver, be careful not to damage the cover.**
- **Be careful when you replace and clean bulbs to avoid burns or electrical shock.**

Engine compartment precautions (Diesel engine)

- The piezo injector operates at high voltage (maximum 200v). Therefore, the following accidents may occur.
  - Direct contact with the injector or injector wiring may cause electric shock or damage your muscle or nerve system.
  - The electromagnetic wave from the operating injector may cause the artificial heart pacemaker to malfunction.
- Follow the safety tips provided below, when you are checking the engine room while the engine is running.
  - Do not touch the injector, injector wirings, and the engine computer while the engine is running.
  - Do not remove the injector connector while the engine is running.
  - People using pacemakers must not go near the engine while the engine is starting or running.

⚠ WARNING

■ Diesel engine

Never work on the injection system with the engine running or within 30 seconds after shutting off the engine. High-pressure pump, rail, injectors and high-pressure pipes are subject to high pressure even after the engine stopped.The fuel jet produced by fuel leaks may cause serious injury, if it touches the body. People using pacemakers should not move more than 30 cm closer to the ECU or wiring harness within the engine room while the engine is running, since the high currents in the electronic engine control system produce considerable magnetic fields.

OWNER MAINTENANCE

The following lists are vehicle checks and inspections that should be performed at the frequencies indicated to help ensure safe, dependable operation of your vehicle.
Any adverse conditions should be brought to the attention of your dealer as soon as possible.
These Owner Maintenance Checks are generally not covered by warranties and you may be charged for labor, parts and lubricants used.

Owner maintenance schedule

When you stop for fuel:

- Check the engine oil level.
- Check the coolant level in the coolant reservoir.
- Check the windshield washer fluid level.
- Look for low or under-inflated tires.

⚠ WARNING

Be careful when checking your engine coolant level when the engine is hot. Scalding hot coolant and steam
(Continued)

(Continued)

may blow out under pressure. This could cause burns or other serious injury.

While operating your vehicle:

- Note any changes in the sound of the exhaust or any smell of exhaust fumes in the vehicle.
- Check for vibrations in the steering wheel. Notice any increased steering effort or looseness in the steering wheel, or change in its straight ahead position.
- Notice if your vehicle constantly turns slightly or "pulls" to one side when traveling on smooth, level road.
- When stopping, listen and check for unusual sounds, pulling to one side, increased brake pedal travel or "hard-to-push" brake pedal.
- If any slipping or changes in the operation of your transaxle occur, check the transaxle fluid level.
- Check manual transaxle operation, including clutch operation.
- Check the automatic transaxle P (Park) function.
- Check the parking brake.
- Check for fluid leaks under your vehicle (water dripping from the air conditioning system during or after use is normal).

At least monthly:

- Check the coolant level in the engine coolant reservoir.
- Check the operation of all exterior lights, including the stoplights, turn signals and hazard warning flashers.
- Check the inflation pressures of all tires including the spare.

At least twice a year (i.e., every spring and fall)

- Check the radiator, heater and air conditioning hoses for leaks or damage.
- Check the windshield washer spray and wiper operation. Clean the wiper blades with clean cloth dampened with washer fluid.
- Check the headlight alignment.
- Check the muffler, exhaust pipes, shields and clamps.

- Check the lap/shoulder belts for wear and function.
- Check for worn tires and loose wheel lug nuts.

At least once a year:

- Clean the body and door drain holes.
- Lubricate the door hinges and checks, and hood hinges.
- Lubricate the door and hood locks and latches.
- Lubricate the door rubber weather-strips.
- Check the air conditioning system.
- Check the power steering fluid level.
- Inspect and lubricate the automatic transaxle linkage and controls.
- Clean the battery and terminals.
- Check the brake/clutch fluid level.

SCHEDULED MAINTENANCE SERVICE

Scheduled maintenance service precaution

Follow the Normal Maintenance Schedule if the vehicle is usually operated where none of the following conditions apply. If any of the following conditions apply, follow the Maintenance Under Severe Usage Conditions.

- Repeated driving short distance of less than 8 km (5 miles) in normal temperature or less than 16 km(10 miles) in freezing temperature
- Extensive engine idling or low speed driving for long distances
- Driving on rough, dusty, muddy, unpaved, graveled or salt-spread roads
- Driving in areas using salt or other corrosive materials or in very cold weather
- Driving in heavy dust condition
- Driving in heavy traffic area
- Driving on uphill, downhill, or mountain road repeatedly
- Towing a trailer or using a camper, or roof rack
- Driving as a patrol car, taxi, other commercial use of vehicle towing
- Driving over 170 km/h (106 mile/h)
- Frequently driving in stop-and-go condition

If your vehicle is operated under the above conditions, you should inspect, replace or refill more frequently than the following Normal Maintenance Schedule. After the periods or distance shown in the chart, continue to follow the prescribed maintenance intervals.

NORMAL MAINTENANCE SCHEDULE - EXCEPT EUROPE (INCLUDING RUSSIA)

The following maintenance services must be performed to ensure good emission control and performance. Keep receipts for all vehicle emission services to protect your warranty. Where both mileage and time are shown, the frequency of service is determined by whichever occurs first.

NO.	ITEM	REMARK
*1	Engine oil and engine oil filter	Check the engine oil level and leak every 500 km (350 miles) or before starting a long trip.
*2	Engine oil and engine oil filter (For Diesel Engine, Europe)	• If the recommended oil is not available, replace engine oil and engine oil filter every 20,000 km (13,000 miles) or 12 months. • The engine oil level should be checked regularly and maintained properly. Operating with an insufficient amount oil can damage the engine, and such damage is not covered by warranty. • This maintenance schedule depends on fuel quality. It is applicable only when using a qualified fuel <"EN590 or equivalent">. If the diesel fuel specifications don't meet the EN590, it must be replaced according to the severe maintenance schedule.
*3	Coolant (Engine)	When adding coolant, use only deionized water or soft water for your vehicle and never mix hard water in the coolant filled at the factory. An improper coolant mixture can result in serious malfunction or engine damage.
*4	Drive belts (Engine)	• Adjust alternator, water pump and air conditioner drive belt. Inspect and if necessary repair or replace. • Inspect drive belt tensioner, idler and alternator pulley and if necessary correct or replace.
*5	Valve clearance	Inspect for excessive valve noise and/or engine vibration and adjust if necessary. In this case, have the system checked by a professional workshop. Kia recommends to visit an authorized Kia dealer/service partner.
*6	Spark plug	For your convenience, it can be replaced prior to it's interval when you do maintenance of other items.

NO.	ITEM	REMARK
*7	Manual transaxle fluid	Manual transaxle fluid should be changed anytime it has been submerged in water.
*8	Differential oil (rear)	Differential oil should be changed anytime it has been submerged in water.
*9	Transfer case oil (AWD)	Transfer case oil should be changed anytime it has been submerged in water.
*10	Fuel additives (Gasoline)	Kia recommends that you use unleaded gasoline which has an octane rating of RON (Research Octane Number) 95 / AKI (Anti Knock Index) 91 or higher (for Europe) or Octane Rating of RON (Research Octane Number) 91 / AKI (Anti-Knock Index) 87 or higher (except Europe). For customers who do not use good quality gasolines including fuel additives regularly, and have problems starting or the engine does not run smoothly, one bottle of additives added to the fuel tank at every 15,000km (10,000miles) (for Europe, Australia and New Zealand) / 10,000 km (6,500 miles) (except Europe, Australia and New Zealand, China, Brazil) / 5,000 km (3,000 miles) (for China, Brazil). Additives are available from a professional workshop along with information on how to use them. Kia recommends to visit an authorized Kia dealer/service partner. Do not mix other additives.
*11	Fuel filter cartridge (Diesel)	This maintenance schedule depends on fuel quality. It is applicable only when using a qualified fuel <"EN590 or equivalent">. If the diesel fuel specifications don't meet the EN590, it must be replaced more frequently. If there are some important safety matters like fuel flow restriction, surging, loss of power, hard starting problem etc., replace the fuel filter immediately regardless of maintenance schedule and consult a professional workshop for more details. Kia recommends to consult an authorized Kia dealer/service partner.

NORMAL MAINTENANCE SCHEDULE – EXCEPT EUROPE (INCLUDING RUSSIA) (CONTINUE)

MAINTENANCE INTERVALS	NORMAL MAINTENANCE SCHEDULE - EXCEPT EUROPE (INCLUDING RUSSIA)									
	Number of months or driving distance, whichever comes first									
	Months			12	24	36	48	60	72	84	96
	Miles×1,000			10	20	30	40	50	60	70	80
	Km×1,000			15	30	45	60	75	90	105	120
MAINTENANCE ITEM											
Engine oil and engine oil filter [*1]	Gasoline	Nu 2.0L MPI	Except Middle East, Libia, Brazil, Central & South America, China	Replace every 15,000 km (10,000 miles) or 12 months							
			For Middle East, Libia, Brazil, Central & South America	Replace every 10,000 km (6,500 miles) or 12 months							
			For China	Replace every 5,000 km (3,000 miles) or 6 months							
	Gasoline	Nu 2.0L FFV		Replace every 10,000 km (6,500 miles) or 12 months							
	Gasoline	Theta II 2.4L GDI	Except Middle East, Libia, Brazil, Central & South America, China	Replace every 15,000 km (10,000 miles) or 12 months							
			For Middle East, Libia, Brazil, Central & South America	Replace every 10,000 km (6,500 miles) or 12 months							
			For China	Replace every 5,000 km (3,000 miles) or 6 months							

MAINTENANCE INTERVALS	NORMAL MAINTENANCE SCHEDULE - EXCEPT EUROPE (INCLUDING RUSSIA)										
	Number of months or driving distance, whichever comes first										
	Months			12	24	36	48	60	72	84	96
	Miles×1,000			10	20	30	40	50	60	70	80
	Km×1,000			15	30	45	60	75	90	105	120
MAINTENANCE ITEM											
Engine oil and engine oil filter *1	Diesel	R 2.0L	For Russia, Australia, New Zealand and Republic of South Africa	Replace every 15,000 km (10,000 miles) or 12 months							
			Except Russia, Australia, New Zealand and Republic of South Africa	Replace every 10,000 km (6,500 miles) or 12 months							
Coolant (Engine) *3	Gasoline, Diesel			At first, Replace 210,000 km (140,000 miles) or 120 months after that, Replace every 30,000 km (20,000 miles) or 24 months							
Drive belts (Engine) *4	Gasoline			-	I	-	I	-	I	-	I
	Diesel		For Russia, Australia, and New Zealand and Republic of South Africa	-	-	-	I	-	I	-	I
			Except Russia, Australia, and New Zealand	-	-	-	I	-	I	-	I
Valve clearance *5	Gasoline	Theta II 2.4L GDI		-	-	-	-	-	I	-	I

MAINTENANCE INTERVALS	NORMAL MAINTENANCE SCHEDULE - EXCEPT EUROPE (INCLUDING RUSSIA)									
	Number of months or driving distance, whichever comes first									
	Months		12	24	36	48	60	72	84	96
	Miles×1,000		10	20	30	40	50	60	70	80
	Km×1,000		15	30	45	60	75	90	105	120
MAINTENANCE ITEM										
Vacuum hoses and crank-case ventilation hoses	Gasoline		-	I	-	I	-	I	-	I
Spark plugs *6	Gasoline	Nu 2.0L MPI	Replace every 150,000 km (100,000 miles)							
		Nu 2.0L FFV	Replace every 10,000 km (6,500 miles) or 12 months							
		Theta II 2.4L GDI	Replace every 150,000 km (100,000 miles)							
Automatic transaxle fluid	Gasoline, Diesel		No check, No service required							
Manual transaxle fluid *7	Gasoline, Diesel		-	-	-	I	-	-	-	I
Drive shaft and boots	Gasoline, Diesel		-	I	-	I	-	I	-	I
Propeller shaft	Gasoline, Diesel		-	I	-	I	-	I	-	I
Differential oil (rear) (AWD) *8	Gasoline, Diesel		-	-	-	I	-	-	-	I
Transfer case oil (AWD) *9	Gasoline, Diesel		-	-	-	I	-	-	-	I

MAINTENANCE INTERVALS	NORMAL MAINTENANCE SCHEDULE - EXCEPT EUROPE (INCLUDING RUSSIA)									
	Number of months or driving distance, whichever comes first									
	Months		12	24	36	48	60	72	84	96
	Miles×1,000		10	20	30	40	50	60	70	80
	Km×1,000		15	30	45	60	75	90	105	120
MAINTENANCE ITEM										
Fuel additives (Gasoline) *10	Gasoline	For Australia and New Zealand	Add every 15,000 km (10,000 miles) or 12months							
		Except Australia and New Zealand, China, Brazil	Add every 10,000 km (6,500 miles) or 6months							
		For China, Brazil	Add every 5,000 km (3,000 miles) or 6months							
Fuel filter (Gasoline)	Gasoline	For China, Brazil	-	I	-	R	-	I	-	R
Fuel lines, hoses and connections	Gasoline		-	-	-	I	-	-	-	I
	Diesel		-	I	-	I	-	I	-	I
Fuel tank air filter (Gasoline)	Gasoline	Except China	-	I	-	R	-	I	-	R
		For China	I	I	R	I	I	R	I	I
Vapor hose and fuel filler cap (Gasoline)	Gasoline		-	-	-	I	-	-	-	I
Fuel filler cap (Diesel)	Diesel		-	-	-	I	-	-	-	I
Fuel filter cartridge (Diesel) *11	Diesel		-	I	-	R	-	I	-	R

MAINTENANCE INTERVALS	NORMAL MAINTENANCE SCHEDULE - EXCEPT EUROPE (INCLUDING RUSSIA)									
	Number of months or driving distance, whichever comes first									
	Months		12	24	36	48	60	72	84	96
	Miles×1,000		10	20	30	40	50	60	70	80
	Km×1,000		15	30	45	60	75	90	105	120
MAINTENANCE ITEM										
Air cleaner filter	Gasoline, Diesel	Except China, India, Middle East	I	I	R	I	I	R	I	I
		For China, India, Middle East	R	R	R	R	R	R	R	R
Exhaust system	Gasoline, Diesel		-	I	-	I	-	I	-	I
Cooling system	Gasoline, Diesel		-	-	-	I	-	I	-	I
Air conditioner compressor/ refrigerant	Gasoline, Diesel		I	I	I	I	I	I	I	I
Climate control air filter	Gasoline, Diesel	Except Australia and New Zealand	R	R	R	R	R	R	R	R
		For Australia and New Zealand	I	R	I	R	I	R	I	R
Brake discs and pads	Gasoline, Diesel		-	I	-	I	-	I	-	I
Brake lines, hoses and connections	Gasoline, Diesel		-	I	-	I	-	I	-	I
Brake fluid	Gasoline, Diesel		I	R	I	R	I	R	I	R
Parking brake (Foot/Hand type)	Gasoline, Diesel		-	I	-	I	-	I	-	I
Steering gear rack, linkage and boots	Gasoline, Diesel		I	I	I	I	I	I	I	I
Suspension ball joints	Gasoline, Diesel		I	I	I	I	I	I	I	I

MAINTENANCE INTERVALS	NORMAL MAINTENANCE SCHEDULE - EXCEPT EUROPE (INCLUDING RUSSIA)								
	Number of months or driving distance, whichever comes first								
	Months		12	24	36	48	60	72	84	96
	Miles×1,000		10	20	30	40	50	60	70	80
	Km×1,000		15	30	45	60	75	90	105	120
MAINTENANCE ITEM										
Tire (pressure & tread wear)	Gasoline, Diesel		I	I	I	I	I	I	I	I
Battery (12V) condition	Gasoline, Diesel	Except Middle East	-	I	-	I	-	I	-	I
		For Middle East	Inspect every 10,000 km (6,500 miles) or 6 months							

I: Inspect and if necessary, adjust, correct, clean or replace.
R: Replace or change.

MAINTENANCE UNDER SEVERE USAGE CONDITIONS – FOR GASOLINE ENGINE [EXCEPT EUROPE (INCLUDING RUSSIA)]

MAINTENANCE ITEM				MAINTENANCE OPERATION	MAINTENANCE INTERVALS	DRIVING CONDITION
Engine oil and engine oil filter	Gasoline	Nu 2.0L (MPI)	Except Middle East, Libia, Brazil, Central & South America, China	R	Every 7,500 km (5,000 miles) or 6 months	A, B, C, D, E, F, G, H, I, J, K
			For Middle East, Libia, Brazil, Central & South America	R	Every 5,000 km (3,000 miles) or 6 months	
			For China	R	Every 5,000 km (3,000 miles) or 6 months	
	Gasoline	Theta II 2.4L GDI	Except Middle East, Libia, Brazil, Central & South America, China	R	Every 7,500 km (5,000 miles) or 6 months	
			For Middle East, Libia, Brazil, Central & South America	R	Every 5,000 km (3,000 miles) or 6 months	
			For China	R	Every 5,000 km (3,000 miles) or 6 months	

MAINTENANCE ITEM				MAINTENANCE OPERATION	MAINTENANCE INTERVALS	DRIVING CONDITION
Engine oil and engine oil filter	Diesel	R 2.0L	For Russia, Australia, New Zealand and Republic of South Africa	R	Every 7,500 km (5,000 miles) or 6 months	A, B, C, D, E, F, G, H, I, J, K
			Except Russia, Australia, New Zealand and Republic of South Africa	R	Every 5,000 km (3,000 miles) or 6 months	
Spark plugs			Gasoline	R	Replace more frequently depending on the condition	B, H, I, K
Automatic transaxle fluid			Gasoline, Diesel	R	Every 90,000 km (60,000 miles)	A, C, E, F, G, H, I, J
Drive shaft and boots			Gasoline, Diesel	I	Inspect more frequently depending on the condition	C, D, E, F, G, H, I, J
Propeller shaft			Gasoline, Diesel	I	Inspect more frequently depending on the condition	C, D, E, F, G, H, I, J
Differential oil (rear) (AWD)			Gasoline, Diesel	R	Every 120,000 km (80,000 miles)	C, E, G, H, I, J
Transfer case oil (AWD)			Gasoline, Diesel	R	Every 120,000 km (80,000 miles)	C, E, G, H, I, J

MAINTENANCE ITEM		MAINTENANCE OPERATION	MAINTENANCE INTERVALS	DRIVING CONDITION
Air cleaner filter	Gasoline, Diesel	R	Replace more frequently depending on the condition	C, E
Climate control air filter	Gasoline, Diesel	R	Replace more frequently depending on the condition	C, E, G
Brake discs and pads, calipers and rotors	Gasoline, Diesel	I	Inspect more frequently depending on the condition	C, D, E, G, H
Parking brake (Foot Type)	Gasoline, Diesel	I	Inspect more frequently depending on the condition	C, D, G, H
Steering gear rack, linkage and boots	Gasoline, Diesel	I	Inspect more frequently depending on the condition	C, D, E, F, G
Suspension ball joints	Gasoline, Diesel	I	Inspect more frequently depending on the condition	C, D, E, F, G

Maintenance operation

I : Inspect and if necessary, adjust, correct, clean or replace.

R : Replace or change.

SEVERE DRIVING CONDITIONS

A: Repeatedly driving short distance of less than 8 km (5 miles) in normal temperature or less than 16 km (10 miles) in freezing temperature.

B: Extensive engine idling or low speed driving for long distances.

C: Driving on rough, dusty, muddy, unpaved, graveled or saltspread roads.
D: Driving in areas using salt or other corrosive materials or in very cold weather
E: Driving in heavy dust condition.
F: Driving in heavy traffic area.
G: Driving on uphill, downhill, or mountain roads repeatedly.
H: Towing a trailer or using a camper on roof rack.
I: Driving for patrol car, taxi, other commercial use of vehicle towing.
J: Driving over 170 km/h (106 mile/h).
K: Frequently driving in stop-and-go conditions.

EXPLANATION OF SCHEDULED MAINTENANCE ITEMS

Engine oil and filter

The engine oil and filter should be changed at the intervals specified in the maintenance schedule. If the vehicle is being driven in severe conditions, more frequent oil and filter changes are required.

Drive belts

Inspect all drive belts for evidence of cuts, cracks, excessive wear or oil saturation and replace if necessary. Drive belts should be checked periodically for proper tension and adjusted as necessary.

⚠ CAUTION

When you are inspecting the belt, place the ignition switch in the LOCK/OFF or ACC position.

Fuel filter cartridge (for diesel)

A clogged filter can limit the speed at which the vehicle may be driven, damage the emission system and cause multiple issues such as hard starting. If an excessive amount of foreign matter accumulates in the fuel tank, the filter may require replacement more frequently.

After installing a new filter, run the engine for several minutes, and check for leaks at the connections.

Have the fuel filter replaced by a professional workshop. Kia recommends to visit an authorized Kia dealer/service partner.

Fuel filter (for gasoline)

Kia gasoline vehicle is equipped a lifetime fuel filter that integrated with the fuel tank.

Regular maintenance or replacement is not needed but depends on fuel quality. If there are some important safety matters like fuel flow restriction, surging, loss of power, hard starting problem etc., fuel filter inspection or replacement is needed.

Have the fuel filter inspected or replaced by a professional workshop. Kia recommends to visit an authorized Kia dealer/service partner.

Fuel lines, fuel hoses and connections

Check the fuel lines, fuel hoses and connections for leakage and damage. Have the fuel lines, fuel hoses and connections replaced by a professional workshop. Kia recommends to visit an authorized Kia dealer/service partner.

⚠ WARNING

■ Diesel only

Never work on the injection system with the engine running or within 30 seconds after shutting off the engine. High pressure pump, rail, injectors and high pressure pipes are subject to high pressure even after the engine stops. The fuel jet produced by fuel leaks may cause serious injury, if it touches the body. People using pacemakers should not more move than 30 cm closer to the ECU or wiring harness within the engine room while the engine is running, since the high currents in the Common Rail system produce considerable magnetic fields.

Vapor hose (for gasoline engine) and fuel filler cap

The vapor hose and fuel filler cap should be inspected at those intervals specified in the maintenance schedule. Make sure that a new vapor hose or fuel filler cap is correctly replaced.

Vacuum crankcase ventilation hoses

Inspect the surface of hoses for evidence of heat and/or mechanical damage. Hard and brittle rubber, cracking, tears, cuts, abrasions, and excessive swelling indicate deterioration. Particular attention should be paid to examine those hose surfaces nearest to high heat sources, such as the exhaust manifold.

Inspect the hose routing to assure that the hoses do not come in contact with any heat source, sharp edges or moving component which might cause heat damage or mechanical wear. Inspect all hose connections, such as clamps and couplings, to make sure they are secure, and that no leaks are present. Hoses should be replaced immediately if there is any evidence of deterioration or damage.

Air cleaner filter

Have the air cleaner filter replaced by a professional workshop. KIA recommends to visit an authorized Kia dealer/service partner.

Spark plugs (for gasoline engine)

Make sure to install new spark plugs of the correct heat range.

⚠ WARNING

Do not disconnect and inspect spark plugs when the engine is hot. You may burn yourself.

Valve clearance (for gasoline engine)

Inspect for excessive valve noise and/or engine vibration and adjust if necessary. In this case, have the system serviced by a professional workshop. Kia recommends to visit an authorized Kia dealer/service partner.

Cooling system

Check the cooling system components, such as the radiator, coolant reservoir, hoses and connections for leakage and damage. Replace any damaged parts.

Coolant

The coolant should be changed at the intervals specified in the maintenance schedule.

Manual transaxle fluid

Inspect the manual transaxle fluid according to the maintenance schedule.

Dual clutch transmission fluid

Inspect the dual clutch transmission fluid according to the maintenance schedule.

Automatic transaxle fluid (if equipped)

Automatic transaxle fluid should not be checked under normal usage conditions. Have the automatic transmission fluid changed by a professional workshop according to the maintenance schedule. Kia recommends to visit an authorized Kia dealer/service partner.

✻ NOTICE

Automatic transaxle fluid color is basically red.

(Continued)

(Continued)

As the vehicle is driven, the automatic transaxle fluid will begin to look darker. It is normal condition and you should not judge the need to replace the fluid based upon the changed color.

⚠ CAUTION

The use of a non-specified fluid could result in transaxle malfunction and failure.
Use only specified automatic transaxle fluid (Refer to "Recommended lubricants and capacities" on page 9-11).

Brake hoses and lines

Visually check for proper installation, chafing, cracks, deterioration and any leakage. Replace any deteriorated or damaged parts immediately.

Brake/Clutch fluid

Check the brake/clutch fluid level in the brake/clutch fluid reservoir. The level should be between "MIN" and "MAX" marks on the side of the reservoir. Use only hydraulic brake/clutch fluid conforming to DOT 3 or DOT 4 specification.

Parking brake

Inspect the parking brake system including the parking brake lever (or pedal) and cables.

Brake discs, pads, calipers and rotors

Check the pads for excessive wear, discs for run out and wear, and calipers for fluid leakage.
For more information on checking the pads or lining wear limit, we recommend to refer to the Kia web site.
(http://www.kia-hotline.com)

Suspension mounting bolts

Check the suspension connections for looseness or damage. Retighten to the specified torque.

Steering gear box, linkage & boots/lower arm ball joint

With the vehicle stopped and engine off, check for excessive free-play in the steering wheel.
Check the linkage for bends or damage. Check the dust boots and ball joints for deterioration, cracks, or damage. Replace any damaged parts.

Drive shafts and boots

Check the drive shafts, boots and clamps for cracks, deterioration, or damage. Replace any damaged parts and, if necessary, repack the grease.

Air conditioning refrigerant

Check the air conditioning lines and connections for leakage and damage.

ENGINE OIL (GASOLINE)

Checking the engine oil level

■ Gasoline Engine (Nu 2.0L - MPI)

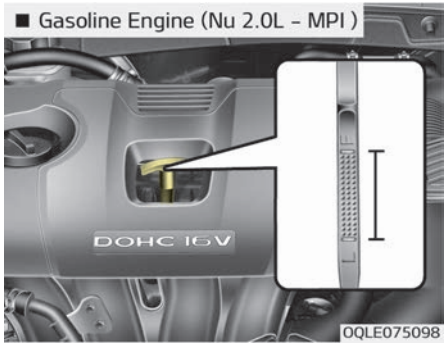

■ Gasoline Engine (Theta II 2.4L - GDI)

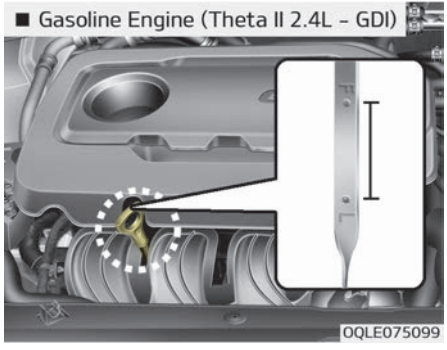

1. Be sure the vehicle is on level ground.
2. Start the engine and allow it to reach normal operating temperature.
3. Turn the engine off and wait for a few minutes (about 5 minutes) for the oil to return to the oil pan.
4. Pull the dipstick out, wipe it clean, and re-insert it fully.

⚠ WARNING

■ Radiator hose

Be very careful not to touch the radiator hose when checking or adding the engine oil as it may be hot enough to burn you.

5. Pull the dipstick out again and check the level. The level should be between F (Full) and L (Low).

⚠ CAUTION

- **Do not overfill the engine oil. It may damage the engine.**

(Continued)

(Continued)

- **Do not spill engine oil, when adding or changing engine oil. If you drop the engine oil on the engine room, wipe it off immediately.**
- **When you wipe the oil level gauge, you should wipe it with a clean cloth. When mixed with debris, it can cause engine damage.**

■ Gasoline Engine (Nu 2.0L - MPI)

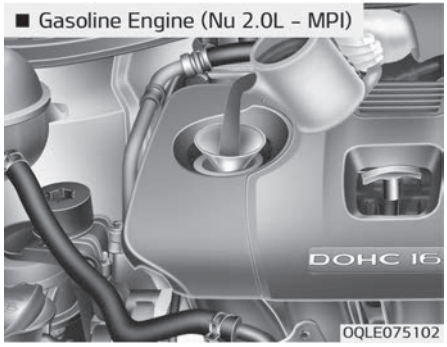

■ Gasoline Engine (Theta II 2.4L - GDI)

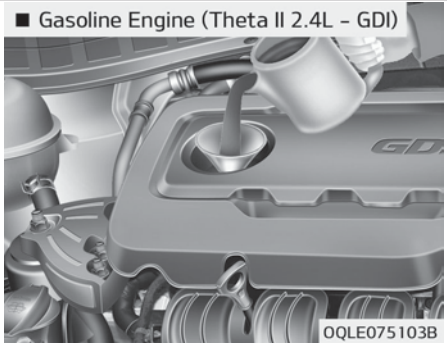

If it is near or at L (Low), add enough oil to bring the level to F (Full). **Do not overfill.**
Use a funnel to help prevent oil from being spilled on engine components.

Use only the specified engine oil (Refer to "Recommended lubricants and capacities (Total)" on page 9-11).

Changing the engine oil and filter

Have the engine oil and filter replaced by a professional workshop. Kia recommends to visit an authorized Kia dealer/service partner.

⚠ WARNING

Used engine oil may cause skin irritation or cancer if left in contact with the skin for prolonged periods of time. Used engine oil contains chemicals that have caused cancer in laboratory animals. Always protect your skin by washing your hands thoroughly with soap and warm water as soon as possible after handling used oil.

ENGINE OIL (DIESEL)

Checking the engine oil level

■ Diesel Engine (R 2.0L)

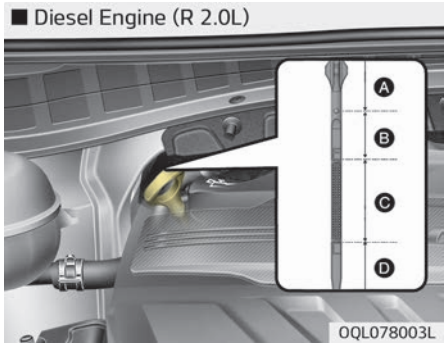

1. Be sure the vehicle is on level ground.
2. Start the engine and allow it to reach normal operating temperature.
3. Turn the engine off and wait for a few minutes (about 5 minutes) for the oil to return to the oil pan.
4. Pull the dipstick out, wipe it clean, and re-insert it fully.

⚠ WARNING

■ Radiator hose

Be very careful not to touch the radiator hose when checking or adding the engine oil as it may be hot enough to burn you.

5. Pull the dipstick out again and check the level.
6. The level should be in the C range. If the level is in the D range, add enough engine oil to bring the level up to the C range.

Figure	Required action according to the respective engine oil level
Range (A)	Contact an authorized Kia dealer/service partner.
Range (B)	Do not refill oil.
Range (C)	Normal. You may add oil as long as the oil level does not go above C-range.
Range (D)	You must add oil and make sure that the oil level is in the C-Range.

⚠ CAUTION

- **Do not spill engine oil, when adding or changing engine oil. If you drop the engine oil on the engine room, wipe it off immediately.**
- **When you wipe the oil level gauge, you should wipe it with a clean cloth. When mixed with debris, it can cause engine damage.**

■ Diesel Engine (R 2.0L)

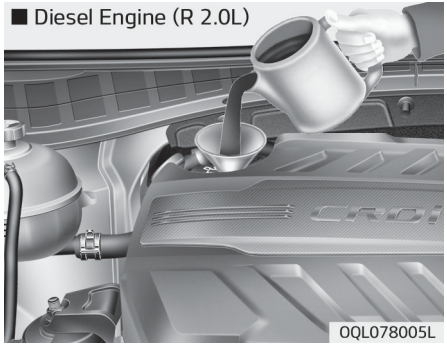

If it is near or at L (Low), add enough oil to bring the level to F (Full). **Do not overfill.**

Use only the specified engine oil (Refer to "Recommended lubricants and capacities (Total)" on page 9-11).

Changing the engine oil and filter

Have the engine oil and filter replaced by a professional workshop. Kia recommends to visit an authorized Kia dealer/ service partner.

⚠ WARNING

Used engine oil may cause skin irritation or cancer if left in contact with the skin for prolonged periods of time. Used engine oil contains chemicals that have caused cancer in laboratory animals. Always protect your skin by washing your hands thoroughly with soap and warm water as soon as possible after handling used oil.

ENGINE COOLANT

The high-pressure cooling system has a reservoir filled with year round anti-freeze coolant. The reservoir is filled at the factory.
Check the antifreeze protection and coolant level at least once a year, at the beginning of the winter season, and before traveling to a colder climate.

⚠ CAUTION

- **When the engine overheats from low engine coolant, suddenly adding engine coolant may cause cracks in the engine. To prevent damage, add engine coolant slowly in small quantities.**
- **Do not drive with no engine coolant. It may cause water pump failure and engine seizure, etc.**

Checking the coolant level

⚠ WARNING



Removing radiator cap

- **Never attempt to remove the radiator cap while the engine is operating or hot. Doing so might lead to cooling system and engine damage. Also, hot coolant or steam could cause serious personal injury.**
- **Turn the engine off and wait until it cools down. Use extreme care when removing the radiator cap. Wrap a thick towel around it, and turn it counterclockwise slowly to the first stop. Step back while the pressure is released from the cooling system.**
  When you are sure all the pressure has been released, press down on the cap, using a thick towel, and continue turning counterclockwise to remove it.

(Continued)

(Continued)

- **Even if the engine is not operating, do not remove the radiator cap or the drain plug while the engine and radiator are hot. Hot coolant and steam may still blow out under pressure, causing serious injury.**

⚠ WARNING



The electric motor (cooling fan) is controlled by engine coolant temperature, refrigerant pressure and vehicle speed.

It may sometimes operate even when the engine is not running. Use extreme caution when working near the blades of the cooling fan so that you are not injured by a rotating fan blades. As the engine coolant temperature decreases, the electric motor will automatically shut off. This is a normal condition.
If your vehicle is equipped with GDI, the electric motor (cooling fan) may operate until you disconnect the negative battery cable.

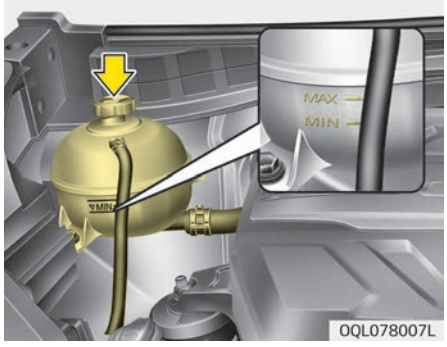

Check the condition and connections of all cooling system hoses and heater hoses. Replace any swollen or deteriorated hoses.
The coolant level should be filled between MAX and MIN marks on the side of the coolant reservoir when the engine is cool.

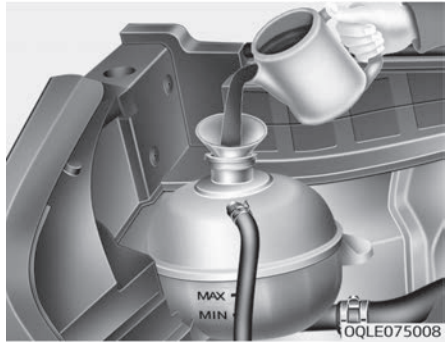

If the coolant level is low, add enough distilled (deionized) or soft water. Bring the level to MAX, but do not overfill.
If frequent additions are required, have the system inspected by a professional workshop. Kia recommends to visit an authorized Kia dealer/service partner.

✻ NOTICE

Make sure the coolant cap is properly closed after refill of coolant.
Otherwise the engine could be overheated while driving.

(Continued)

(Continued)

■ Engine room front view

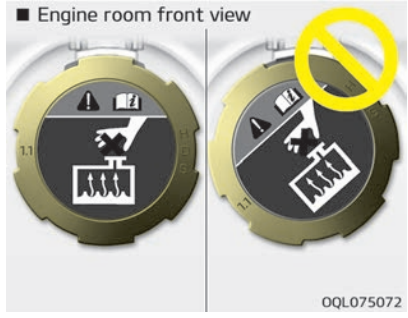

1. Check if the radiator cap label is straight in front.

■ Engine room rear view

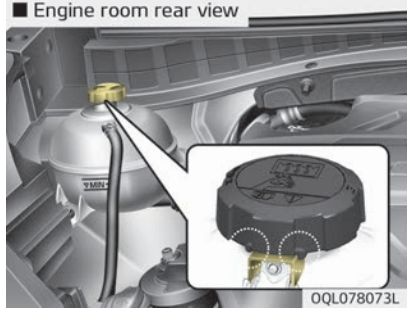

(Continued)

(Continued)

2. Make sure that the tiny protrusions inside the coolant cap are securely interlocked.

Recommended engine coolant

- When adding coolant, use only deionized water or soft water for your vehicle and never mix hard water in the coolant filled at the factory. An improper coolant mixture can result in serious malfunction or engine damage.
- The engine in your vehicle has aluminum engine parts and must be protected by an ethylene-glycol with phosphate based coolant to prevent corrosion and freezing.
- DO NOT USE alcohol or methanol coolant or mix them with the specified coolant.
- Do not use a solution that contains more than 60% antifreeze or less than 35% antifreeze, which would reduce the effectiveness of the solution.

For mixture percentage, refer to the following table.

Ambient temperature	Mixture percentage (volume)	
	Antifreeze	Water
-15 °C (5 °F)	35	65
-25 °C (-13 °F)	40	60
-35 °C (-31 °F)	50	50
-45 °C (-49 °F)	60	40

Changing the coolant

Have the coolant replaced by a professional workshop. Kia recommends to visit an authorized Kia dealer/service partner.

⚠ CAUTION

Put a thick cloth around the radiator cap before refilling the coolant in order to prevent the coolant from overflowing into engine parts such as the alternator.

⚠ WARNING

■ Coolant

- **Do not use radiator coolant or antifreeze in the washer fluid reservoir.**
- **Radiator coolant can severely obscure visibility when sprayed on the windshield and may cause loss of vehicle control or damage the paint and body trim.**

BRAKE/CLUTCH FLUID

Checking the brake/clutch fluid level

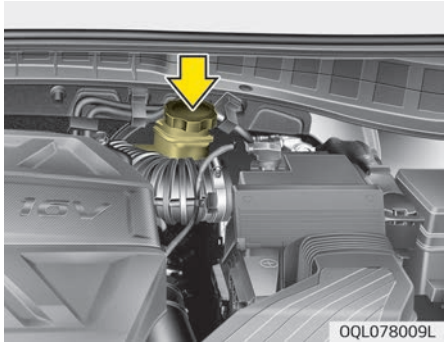

Check the fluid level in the reservoir periodically. The fluid level should be between MAX and MIN marks on the side of the reservoir.
Before removing the reservoir cap and adding brake/clutch fluid, clean the area around the reservoir cap thoroughly to prevent brake/clutch fluid contamination.
If the level is low, add fluid to the MAX level. The level will fall with accumulated mileage. This is a normal condition associated with the wear of the brake linings.

If the fluid level is excessively low, have the system checked by a professional workshop. Kia recommends to visit an authorized Kia dealer/service partner.
Use only the specified brake fluid (Refer to "Recommended lubricants and capacities" on page 9-11).
Never mix different types of fluid.

⚠ WARNING

■ Loss of brake/clutch fluid

In the event the brake/clutch system requires frequent additions of fluid, have the system inspected by a professional workshop. Kia recommends to visit an authorized Kia dealer/service partner.

⚠ WARNING

■ Brake/clutch fluid

When changing and adding brake/clutch fluid, handle it carefully. Do not let it come in contact with your eyes. If brake/clutch fluid should come in contact with your eyes, im-
(Continued)

(Continued)

mediately flush them with a large quantity of fresh tap water. Have your eyes examined by a doctor as soon as possible.

⚠ CAUTION

Do not allow brake/clutch fluid to contact the vehicle's body paint, as paint damage will result. Brake/clutch fluid which has been exposed to open air for an extended time should never be used as its quality cannot be guaranteed. It should be properly disposed. Don't put in the wrong kind of fluid. A few drops of mineral-based oil, such as engine oil, in your brake/clutch system can damage brake/clutch system parts.

WASHER FLUID

Checking the washer fluid level

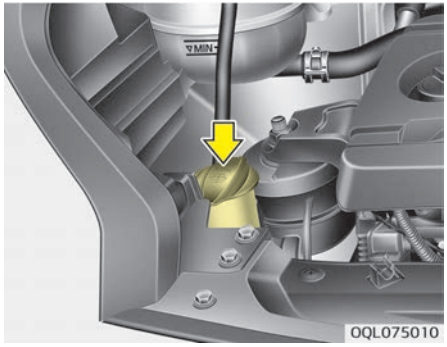

The reservoir is translucent so that you can check the level with a quick visual inspection.
Check the fluid level in the washer fluid reservoir and add fluid if necessary. Plain water may be used if washer fluid is not available. However, use washer solvent with antifreeze characteristics in cold climates to prevent freezing.

⚠ WARNING

■ Coolant

- **Do not use radiator coolant or antifreeze in the washer fluid reservoir.**
- **Radiator coolant can severely obscure visibility when sprayed on the windshield and may cause loss of vehicle control or damage to paint and body trim.**
- **Windshield washer fluid agents contain some amounts of alcohol and can be flammable under certain circumstances. Do not allow sparks or flame to contact the washer fluid or the washer fluid reservoir. Damage to the vehicle or occupants could occur.**
- **Windshield washer fluid is poisonous to humans and animals. Do not drink and avoid contacting windshield washer fluid. Serious injury or death could occur.**

PARKING BRAKE

Checking the parking brake

Type A

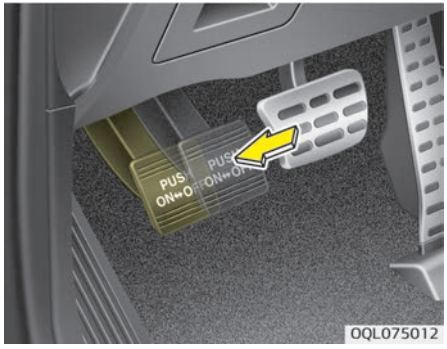

Check whether the stroke is within specification when the parking brake pedal is depressed with 20 kg (44 lbs, 196 N) of force. Also, the parking brake alone should securely hold the vehicle on a fairly steep grade. If the stroke is more or less than specified, have the system serviced by a professional workshop. Kia recommends to visit an authorized Kia dealer/service partner.

Stroke : 4~5 notch

Type B

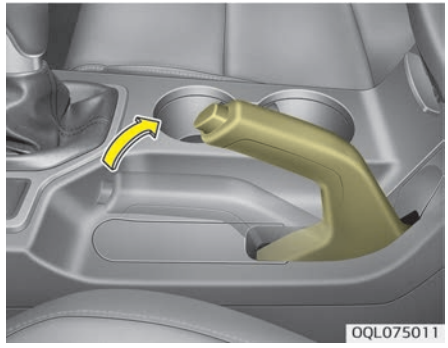

Check the stroke of the parking brake by counting the number of "clicks" heard while fully applying it from the released position. Also, the parking brake alone should securely hold the vehicle on a fairly steep grade. If the stroke is more or less than specified, have the system serviced by a professional workshop. Kia recommends to visit an authorized Kia dealer/service partner.

Stroke : 6~7 "clicks" at a force of 20 kg (44 lbs, 196 N).

FUEL FILTER (FOR DIESEL)

Draining water from the fuel filter

The fuel filter for diesel engine plays an important role of separating water from fuel and accumulating the water in its bottom.
If water accumulates in the fuel filter, the warning light comes on when the ignition switch is in the ON position.



If this warning light illuminates, take your car to a professional workshop and have drain the water and check the system. Kia recommends to visit an authorized Kia dealer/service partner.

⚠ CAUTION

If the water accumulated in the fuel filter is not drained at proper times, damages to the major parts such as the fuel system can be caused by water permeation in the fuel filter.

Fuel filter cartridge replacement

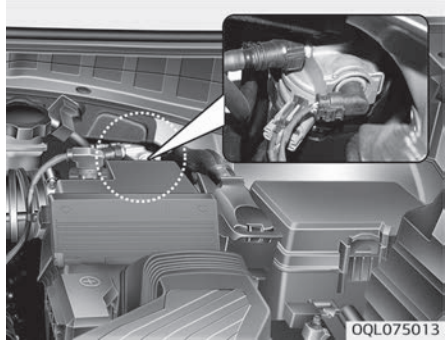

✻ NOTICE

When replacing the fuel filter cartridge, use parts for replacement from a professional workshop. Kia recommends to visit an authorized Kia dealer/service partner.

AIR CLEANER

Filter replacement

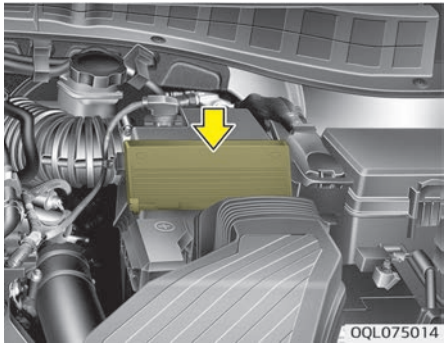

It must be replaced when necessary, and should not be washed.
You can clean the filter when inspecting the air cleaner element.
Clean the filter by using compressed air.

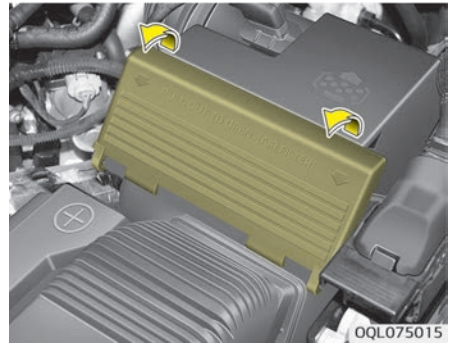

1. Pull out the air cleaner cover.



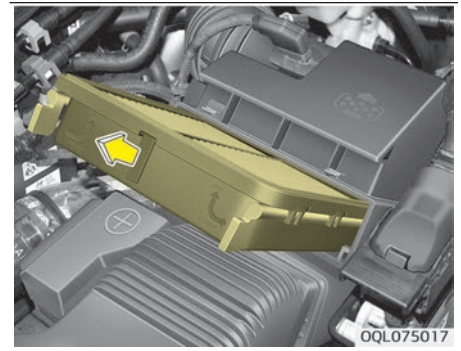

2. Unlock by turning the locking lever downward.
3. Pull the air cleaner filter to replace.

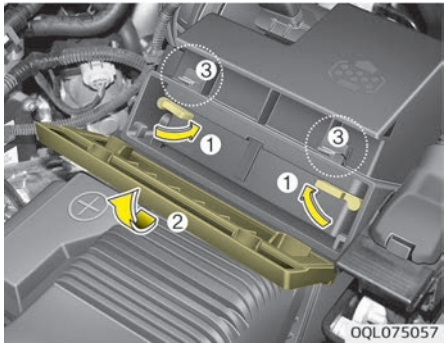

4. Pull up the lever (1) to the LOCK position.
5. Rise up the cover (2) until the hooks on the cover are securely fastened into the latches (3).
6. Check if the cover is firmly installed.

Replace the filter according to the Maintenance Schedule.
If the vehicle is operated in extremely dusty or sandy areas, replace the element more often than the usual recommended intervals (Refer to "Maintenance Under Severe Usage Conditions - For Gasoline Engine [Except Europe (Including Russia)]" on page 8-19).

⚠ CAUTION

- **Do not drive with the air cleaner removed; this will result in excessive engine wear.**
- **When removing the air cleaner filter, be careful that dust or dirt does not enter the air intake, or damage may result.**
- **Use parts for replacement from a professional workshop. Kia recommends to visit an authorized Kia dealer/service partner.**

CLIMATE CONTROL AIR FILTER

Filter inspection

The climate control air filter should be replaced according to the maintenance schedule. If the vehicle is operated in severely air-polluted cities or on dusty rough roads for a long period, it should be inspected more frequently and replaced earlier. When you replace the climate control air filter, replace it performing the following procedure, and be careful to avoid damaging other components.

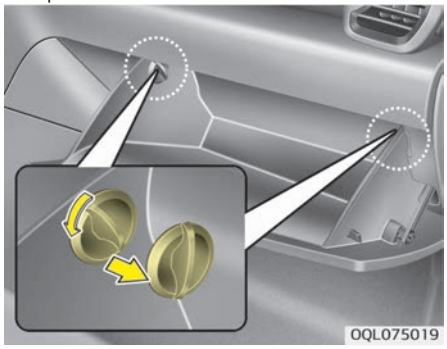

1. Open the glove box and remove the stoppers on both sides.

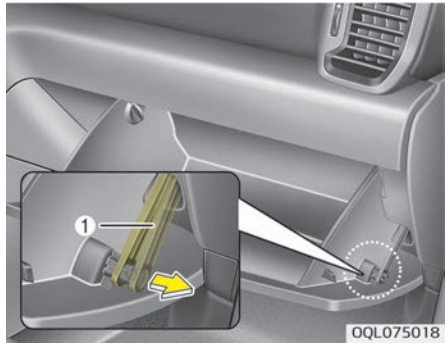

2. With the glove box open, pull the support strap (1).

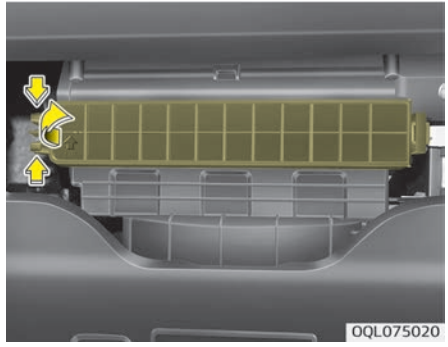

3. Remove the climate control air filter cover while pressing the lock on the left side of the cover.

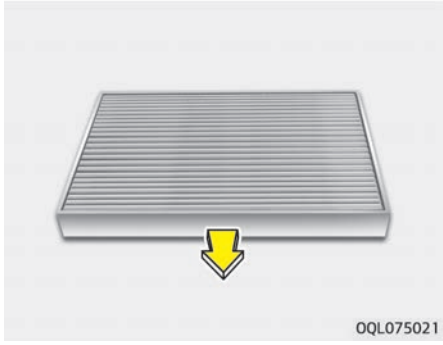

4. Replace the climate control air filter.
5. Reassemble in the reverse order of disassembly.

✻ NOTICE

When replacing the climate control air filter install it properly. Otherwise, the system may produce noise and the effectiveness of the filter may be reduced.

WIPER BLADES

Blade inspection

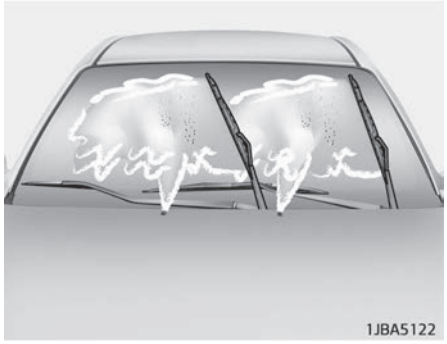

✻ NOTICE

Commercial hot waxes applied by automatic car washes have been known to make the windshield difficult to clean.

Contamination of either the windshield or the wiper blades with foreign matter can reduce the effectiveness of the windshield wipers. Common sources of contamination are insects, tree sap, and hot wax treatments used by some commercial car washes. If the blades are not wiping properly, clean both the window and the blades with a good cleaner or mild detergent, and rinse thoroughly with clean water.

⚠ CAUTION

To prevent damage to the wiper blades, do not use gasoline, kerosene, paint thinner, or other solvents on or near them.

Blade replacement

When the wipers no longer clean adequately, the blades may be worn or cracked, and require replacement.

⚠ CAUTION

To prevent damage to the wiper arms or other components, do not
(Continued)

(Continued)

attempt to move the wipers manually.

⚠ CAUTION

The use of a non-specified wiper blade could result in wiper malfunction and failure.

Front windshield wiper blade

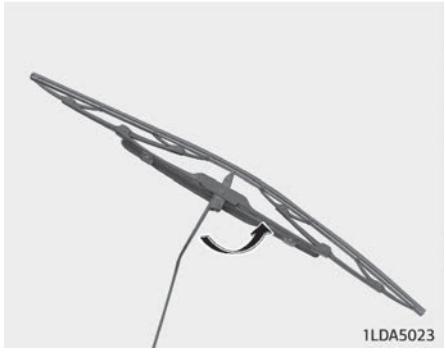

Type A

1. Raise the wiper arm and turn the wiper blade assembly to expose the plastic locking clip.

⚠ CAUTION

Do not allow the wiper arm to fall against the windshield, since it may chip or crack the windshield.

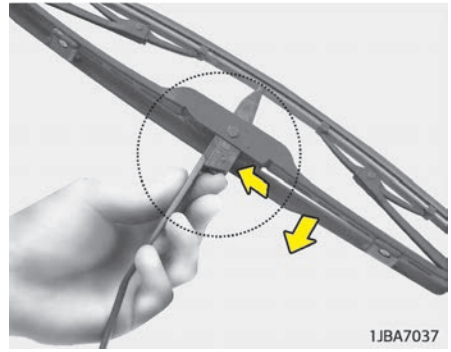

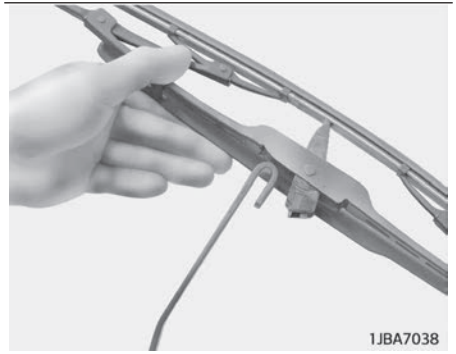

2. Compress the clip and slide the blade assembly downward.
3. Lift it off the arm.
4. Install the blade assembly in the reverse order of removal.

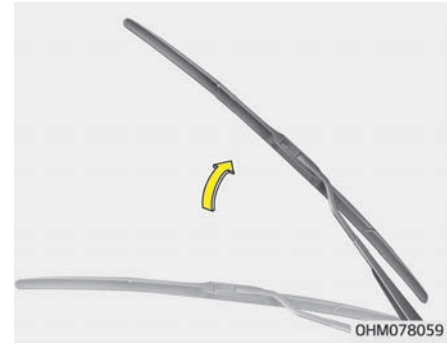

Type B

1. Raise the wiper arm.

⚠ CAUTION

Do not allow the wiper arm to fall against the windshield, since it may chip or crack the windshield.

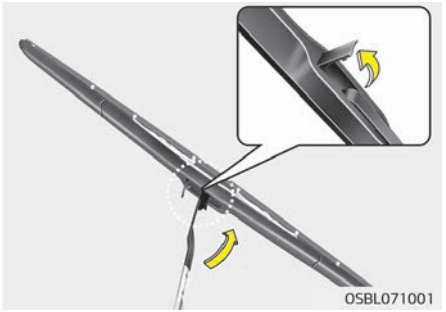

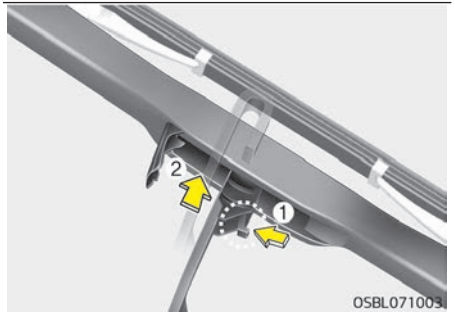

2. Turn the wiper blade clip. Then lift up the blade clip.
3. Push the clip (1) and push up the wiper arm (2).



4. Push down the wiper arm (3) and install the new blade assembly in the reverse order of removal.
5. Return the wiper arm on the windshield.

Rear window wiper blade

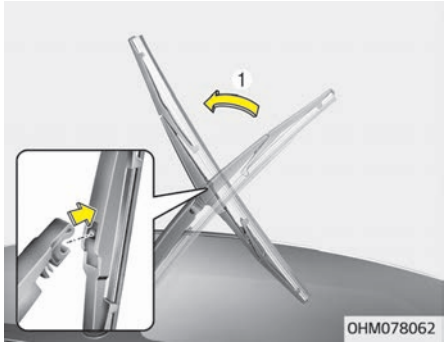

1. Raise the wiper arm and pull out the wiper blade assembly.

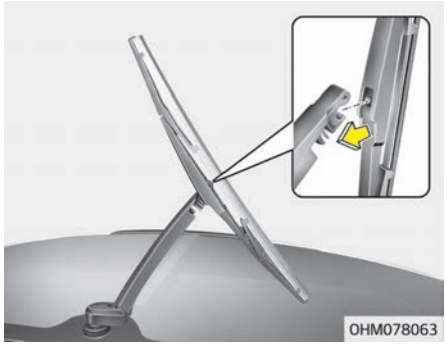

2. Install the new blade assembly by inserting the center part into the

slot in the wiper arm until it clicks into place.

3. Make sure the blade assembly is installed firmly by trying to pull it slightly.

To prevent damage to the wiper arms or other components, have the wiper blade replaced by a professional workshop. Kia recommends to visit an authorized Kia dealer/service partner.

BATTERY

For best battery service

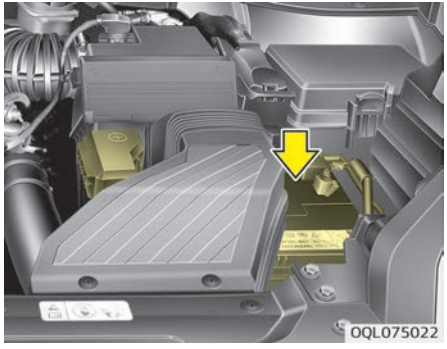

- Keep the battery securely mounted.
- Keep the battery top clean and dry.
- Keep the terminals and connections clean, tight, and coated with petroleum jelly or terminal grease.
- Rinse any spilled electrolyte from the battery immediately with a solution of water and baking soda.
- If the vehicle is not going to be used for an extended time, disconnect the battery cables.

✻ NOTICE

Basically equipped battery is maintenance free type. If your vehicle is equipped with the battery marked with LOWER and UPPER on the side, you can check the electrolyte level. The electrolyte level should be between LOWER and UPPER. If the electrolyte level is low, you need to add distilled (demineralized) water (Never add sulfuric acid or other electrolyte). When refilling, be careful not to splash the battery and adjacent components. And do not overfill the battery cells. It can cause corrosion on other parts. After that, ensure that the cell caps are tightened. Contact a professional workshop. Kia recommends to visit an authorized Kia dealer/service partner.

⚠ WARNING

■ Battery dangers

(Continued)

(Continued)

Always read the following instructions carefully when handling a battery.

Keep lighted cigarettes and all other flames or sparks away from the battery.

Hydrogen, a highly combustible gas, is always present in battery cells and may explode if ignited.

Keep batteries out of the reach of children because batteries contain highly corrosive SULFURIC ACID. Do not allow battery acid to contact your skin, eyes, clothing or paint finish.

(Continued)

(Continued)



If any electrolyte gets into your eyes, flush your eyes with clean water for at least 15 minutes and get immediate medical attention.
If electrolyte gets on your skin, thoroughly wash the contacted area. If you feel pain or burning sensation, get medical attention immediately.



Wear eye protection when charging or working near a battery. Always provide ventilation when working in an enclosed space.



An inappropriately disposed battery can be harmful to the environment and human health. Dispose the battery according to your local law(s) or regulation.



The battery contains lead. Do not dispose of it after use. Contact a professional workshop. Kia recommends to visit an authorized Kia dealer/service partner.

(Continued)

(Continued)

- **When lifting a plastic-cased battery, excessive pressure on the case may cause battery acid to leak, resulting in personal injury. Lift with a battery carrier or with your hands on opposite corners.**
- **Never attempt to recharge the battery when the battery cables are connected.**
- **The electrical ignition system works with high voltage. Never touch these components with the engine running or the ignition switched on.**

Failure to follow the above warnings can result in serious bodily injury or death.

⚠ CAUTION

- **When you don't use the vehicle for a long time in a low temperature area, separate the battery and keep it indoors.**

(Continued)

(Continued)

- **Always charge the battery fully to prevent battery case damage in a low temperature area.**
- **If you connect unauthorized electronic devices to the battery, the battery may be discharged. Never use unauthorized devices.**

Battery capacity label

■ Example



OUM074113L

✻ The actual battery label in the vehicle may differ from the illustration.

1. AGM90L-DIN: The Kia model name of battery

2. 90Ah(20HR): The nominal capacity (in Ampere hours)
3. 170RC: The nominal reserve capacity (in min.)
4. 12V: The nominal voltage
5. 850CCA (SAE): The cold-test current in amperes by SAE
6. 680A: The cold-test current in amperes by EN

Battery recharging

Your vehicle has a maintenance-free, calcium-based battery.

- If the battery becomes discharged in a short time (because, for example, the headlights or interior lights were left on while the vehicle was not in use), recharge it by slow charging (trickle) for 10 hours.
- If the battery gradually discharges because of high electric load while the vehicle is being used, recharge it at 20-30 A for two hours.

⚠ WARNING

■ Recharging battery

(Continued)

When recharging the battery, observe the following precautions:

- **The battery must be removed from the vehicle and placed in an area with good ventilation.**
- **Do not allow cigarettes, sparks, or flame near the battery.**
- **Watch the battery during charging, and stop or reduce the charging rate if the battery cells begin gassing (boiling) violently or if the temperature of the electrolyte of any cell exceeds 49 °C (120 °F).**
- **Wear eye protection when checking the battery during charging.**
- **Disconnect the battery charger in the following order.**

1. **Turn off the battery charger main switch.**
2. **Unhook the negative clamp from the negative battery terminal.**
3. **Unhook the positive clamp from the positive battery terminal.**

⚠ WARNING

- **Before performing maintenance or recharging the battery, turn off all accessories and stop the engine.**
- **The negative battery cable must be removed first and installed last when the battery is disconnected.**
- **Operation related to the battery is recommended to be done by a professional workshop. Kia recommends to visit an authorized Kia dealer/service partner.**

⚠ CAUTION

- **Keep the battery away from water or any liquid.**
- **For your safety, use parts for replacement from a professional workshop. Kia recommends to visit an authorized Kia dealer/service partner.**

Reset items

Items should be reset after the battery has been discharged or the battery has been disconnected.

- Auto up/down window

- Sunroof
- Trip computer
- Climate control system
- Integrated Memory System
- Audio

⚠ CAUTION

■ AGM battery (if equipped)

- **Absorbent Glass Matt (AGM) batteries are maintenance free and have the AGM battery serviced by a professional workshop. Kia recommends to visit an authorized Kia dealer/ service partner. For charging your AGM battery, use only fully automatic battery chargers that are specially developed for AGM batteries.**
- **When replacing the AGM battery, use parts for replacement from a professional workshop. Kia recommends to visit an authorized Kia dealer/service partner.**
- **Do not open or remove the cap on top of the battery. This may cause leaks of internal electrolyte that could result in severe injury.**

TIRES AND WHEELS

Tire care

For proper maintenance, safety, and maximum fuel economy, you must always maintain recommended tire inflation pressures and stay within the load limits and weight distribution recommended for your vehicle.

Recommended cold tire inflation pressures

All tire pressures (including the spare) should be checked when the tires are cold. "Cold Tires" means the vehicle has not been driven for at least three hours or driven less than 1.6 km (one mile).
Recommended pressures must be maintained for the best ride, top vehicle handling, and minimum tire wear. For recommended inflation pressure, refer to "Tires and wheels" on page 9-09.

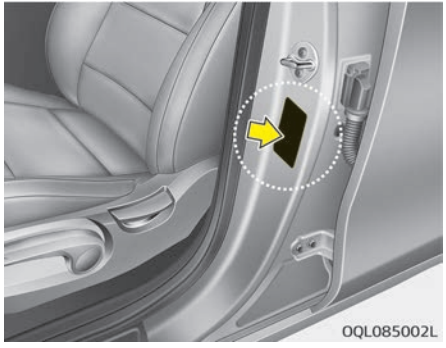

All specifications (sizes and pressures) can be found on a label attached to the vehicle.

⚠ WARNING

■ Tire underinflation

Severe underinflation (70 kPa (10 psi) or more) can lead to severe heat build-up, causing blowouts, tread separation and other tire failures that can result in the loss of vehicle control leading to severe injury or death. This risk is much higher on

(Continued)

(Continued)

hot days and when driving for long periods at high speeds.

⚠ CAUTION

- **Underinflation also results in excessive wear, poor handling and reduced fuel economy. Wheel deformation is also possible. Keep your tire pressures at the proper levels. If a tire frequently needs refilling, have the system checked by a professional workshop. Kia recommends to visit an authorized Kia dealer/service partner.**
- **Overinflation produces a harsh ride, excessive wear at the center of the tire tread, and a greater possibility of damage from road hazards.**

⚠ CAUTION

- **Warm tires normally exceed recommended cold tire pressures by 28 to 41 kPa (4 to 6 psi). Do not release air from warm tires to adjust the pressure or the tires will be underinflated.**
- **Be sure to reinstall the tire inflation valve caps. Without the valve cap, dirt or moisture could get into the valve core and cause air leakage. If a valve cap is missing, install a new one as soon as possible.**

⚠ WARNING

■ Tire Inflation

Overinflation or underinflation can reduce tire life, adversely affect vehicle handling, and lead to sudden tire failure. This could result in loss of vehicle control and potential injury.

⚠ CAUTION

■ Tire pressure

Always observe the following:

- **Check tire pressure when the tires are cold. (After vehicle has been parked for at least three hours or hasn't been driven more than 1.6 km (one mile) since startup.)**
- **Check the pressure of your spare tire each time you check the pressure of other tires.**
- **Never overload your vehicle. Be careful not to overload a vehicle luggage rack if your vehicle is equipped with one.**
- **Worn, old tires can cause accidents. If your tread is badly worn, or if your tires have been damaged, replace them.**

Checking tire inflation pressure

Check your tires once a month or more. Also, check the tire pressure of the spare tire.

How to check

Use a good quality gauge to check tire pressure. You can not tell if your tires are properly inflated simply by looking at them. Radial tires may look properly inflated even when they're underinflated.

Check the tire's inflation pressure when the tires are cold. - "Cold" means your vehicle has been sitting for at least three hours or driven no more than 1.6 km (1 mile). Remove the valve cap from the tire valve stem. Press the tire gauge firmly onto the valve to get a pressure measurement. If the cold tire inflation pressure matches the recommended pressure on the tire and loading information label, no further adjustment is necessary. If the pressure is low, add air until you reach the recommended amount.

If you overfill the tire, release air by pushing on the metal stem in the center of the tire valve. Recheck the tire pressure with the tire gauge. Be sure to put the valve caps back on the valve stems. They help prevent leaks by keeping out dirt and moisture.

⚠ WARNING

- **Inspect your tires frequently for proper inflation as well as wear and damage. Always use a tire pressure gauge.**
- **Tires with too much or too little pressure wear unevenly causing poor handling, loss of vehicle control, and sudden tire failure leading to accidents, injuries, and even death. The recommended cold tire pressure for your vehicle can be found in this manual and on the tire label located on the driver's side center pillar.**
- **Worn tires can cause accidents. Replace tires that are worn, show uneven wear, or are damaged.**
- **Remember to check the pressure of your spare tire. Kia recommends that you check the spare every time you check the pressure of the other tires on your vehicle.**

Tire rotation

To equalize tread wear, it is recommended that the tires be rotated every 10,000 km (6,500 miles) or sooner if irregular wear develops.

During rotation, check the tires for correct balance.
When rotating tires, check for uneven wear and damage. Abnormal wear is usually caused by incorrect tire pressure, improper wheel alignment, outofbalance wheels, severe braking or severe cornering. Look for bumps or bulges in the tread or side of tire. Replace the tire if you find either of these conditions. Replace the tire if fabric or cord is visible. After rotation, be sure to bring the front and rear tire pressures to specification and check lug nut tightness.
Refer to “Tires and wheels” on page 9-09.

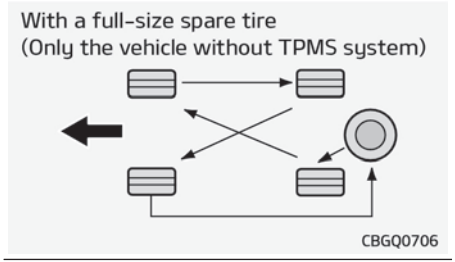

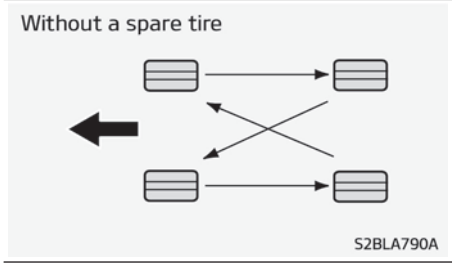

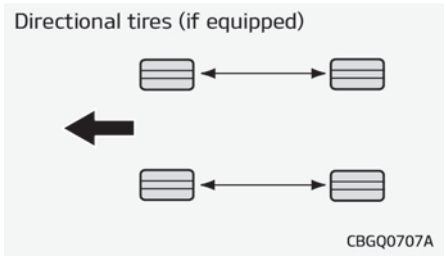

Disc brake pads should be inspected for wear whenever tires are rotated.

✻ NOTICE

Rotate radial tires that have an asymmetric tread pattern only from front to rear and not from right to left.

⚠ WARNING

- **Do not use the compact spare tire (if equipped) for tire rotation.**
- **Do not mix bias ply and radial ply tires under any circumstances. This may cause unusual handling characteristics that could result in death, severe injury, or property damage.**

Wheel alignment and tire balance

The wheels on your vehicle were aligned and balanced carefully at the factory to give you the longest tire life and best overall performance.
In most cases, you will not need to have your wheels aligned again. However, if you notice unusual tire wear or your vehicle pulling one way or the other, the alignment may need to be reset.

If you notice your vehicle vibrating when driving on a smooth road, your wheels may need to be rebalanced.

⚠ CAUTION

Improper wheel weights can damage your vehicle's aluminum wheels. Use only approved wheel weights.

Tire replacement



If the tire is worn evenly, a tread wear Indicator (A) will appear as a solid band across the tread. This shows there is less than 1.6 mm (1/16 in.) of tread left on the tire. Replace the tire when this happens.
Do not wait for the band to appear across the entire tread before replacing the tire.

✻ NOTICE

We recommend that when replacing tires, use the same originally supplied with the vehicles.
If not, that affects driving performance.

⚠ CAUTION

When replacing the tires, recheck and tighten the wheel nuts after driving about 1,000 km (620 miles). If the steering wheel shakes or the vehicle vibrates while driving, the tire is out of balance. Align the tire balance. If the problem is not solved, contact a professional workshop. Kia recommends to visit an authorized Kia dealer/service partner.

⚠ WARNING

■ Replacing tires

To reduce the chance of serious or fatal injuries from an accident
(Continued)

(Continued)

caused by tire failure or loss of vehicle control:

- **Replace tires that are worn, show uneven wear, or are damaged. Worn tires can cause loss of braking effectiveness, steering control, and traction.**
- **Do not drive your vehicle with too little or too much pressure in your tires. This can lead to uneven wear and tire failure.**
- **When replacing tires, never mix radial and bias-ply tires on the same car. It is best to replace all four tires at the same time. If that is not possible, or necessary, then replace the two front or two rear tires as a pair. Replacing just one tire can seriously attect your vehicle's handling.**
- **Using tires and wheels other than the recommended sizes could cause unusual handling characteristics and poor vehicle control, resulting in a serious accident.**

(Continued)

(Continued)

- **Wheels that do not meet Kia's specifications may fit poorly and result in damage to the vehicle or unusual handling and poor vehicle control.**
- **The ABS works by comparing the speed of the wheels. The tire size affects wheel speed. When replacing tires, all 4 tires must use the same size originally supplied with the vehicle. Using tires of a different size can cause the ABS (Anti-lock Brake System) and ESC (Electronic Stability Control) to work irregularly.**

Compact spare tire replacement (if equipped)

A compact spare tire has a shorter tread life than a regular size tire. Replace it when you can see the tread wear indicator bars on the tire. The replacement compact spare tire should be the same size and design tire as the one provided with your new vehicle and should be mounted on the same compact spare tire wheel. The compact spare tire is not designed to be mounted on a regular size wheel, and the compact spare tire wheel is not designed for mounting a regular size tire.

Wheel replacement

When replacing the metal wheels for any reason, make sure the new wheels are equivalent to the original factory units in diameter, rim width and offset.

⚠ WARNING

A wheel that is not the correct size may adversely affect wheel and bearing life, braking and stopping abilities, handling characteristics, ground clearance, body-to-tire
(Continued)

(Continued)

clearance, snow chain clearance, speedometer and odometer calibration, headlight aim and bumper height.

Tire traction

Tire traction can be reduced if you drive on worn tires, tires that are improperly inflated or on slippery road surfaces. Tires should be replaced when tread wear indicators appear. Slow down whenever there is rain, snow or ice on the road to reduce the possibility of losing control of the vehicle.

Tire maintenance

In addition to proper inflation, correct wheel alignment helps to decrease tire wear. If you find a tire is worn unevenly, have your dealer check the wheel alignment.
When you have new tires installed, make sure they are balanced. This will increase vehicle ride comfort and tire life. Additionally, a tire should always be rebalanced if it is removed from the wheel.

Tire sidewall labeling

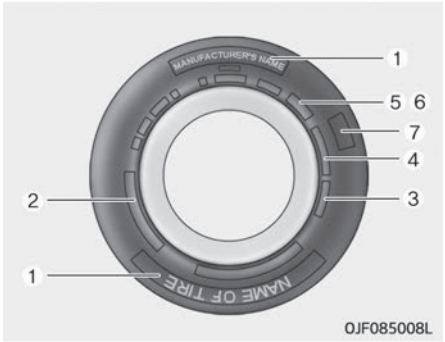

This information identifies and describes the fundamental characteristics of the tire and also provides the tire identification number (TIN) for safety standard certification. The TIN can be used to identify the tire in case of a recall.

1. Manufacturer or brand name

Manufacturer or Brand name is shown.

2. Tire size designation

A tire's sidewall is marked with a tire size designation. You will need this information when selecting replacement tires for your vehicle. The following explains what the letters and numbers in the tire size designation mean.
Example tire size designation: (These numbers are provided as an example only; your tire size designator could vary depending on your vehicle.)

P235/55R19 108T

P - Applicable vehicle type (tires marked with the prefix "P" are intended for use on passenger vehicles or light trucks; however, not all tires have this marking).
235 - Tire width in millimeters.
55 - Aspect ratio. The tire's section height as a percentage of its width.
R - Tire construction code (Radial).
19 - Rim diameter in inches.
108 - Load Index, a numerical code associated with the maximum load the tire can carry.
T - Speed Rating Symbol. See the speed rating chart in this section for additional information.

Wheel size designation

Wheels are also marked with important information that you need if you ever have to replace one. The following explains what the letters and numbers in the wheel size designation mean.

Example wheel size designation: **7.5JX19**

7.5 - Rim width in inches.
J - Rim contour designation.
19 - Rim diameter in inches.

Tire speed ratings

The chart below lists many of the different speed ratings currently being used for passenger car tires. The speed rating is part of the tire size designation on the sidewall of the tire. This symbol corresponds to that tire's designed maximum safe operating speed.

Speed Rating Symbol	Maximum Speed
S	180 km/h (112 mph)
T	190 km/h (118 mph)
H	210 km/h (130 mph)
V	240 km/h (149 mph)
W	270 km/h (168 mph)
Y	300 km/h (186 mph)

3. Checking tire life (TIN: Tire Identification Number)

Any tires that are over 6 years old, based on the manufacturing date, (including the spare tire) should be replaced by new ones. You can find the manufacturing date on the tire sidewall (possibly on the inside of the wheel), displaying the DOT Code. The DOT Code is a series of numbers on a tire consisting of numbers and English letters. The manufacturing date is designated by the last four digits (characters) of the DOT code.

DOT : XXXX XXXX 0000

The front part of the DOT means a plant code number, tire size and tread pattern and the last four numbers indicate week and year manufactured.
For example:
DOT XXXX XXXX 1617 represents that the tire was produced in the 16th week of 2017.

⚠ WARNING

■ Tire age

Tires degrade over time, even when they are not being used.
Regardless of the remaining tread, we recommend that tires be replaced after approximately six (6) years of normal service. Heat caused by hot climates or frequent high loading conditions can accelerate the aging process. Failure to follow this warning can result in sudden tire failure, which could lead to a loss of control and an accident involving serious injury or death.

4. Tire ply composition and material

The number of layers or plies of rubber- coated fabric in the tire. Tire manufacturers also must indicate the materials in the tire, which include steel, nylon, polyester, and others. The letter "R" means radial ply construction; the letter "D" means diagonal or bias ply construction; and the letter "B" means belted-bias ply construction.

5. Maximum permissible inflation pressure

This number is the greatest amount of air pressure that should be put in the tire. Do not exceed the maximum permissible inflation pressure. Refer to the Tire and Loading Information label for recommended inflation pressure.

6. Maximum load rating

This number indicates the maximum load in kilograms and pounds that can be carried by the tire. When replacing the tires on the vehicle, always use a tire that has the same load rating as the factory installed tire.

7. Uniform tire quality grading

Quality grades can be found where applicable on the tire sidewall between tread shoulder and maximum section width.
For example:
TREADWEAR 200
TRACTION AA
TEMPERATURE A

Tread wear

The tread wear grade is a comparative rating based on the wear rate of the tire when tested under controlled conditions on a specified government test course. For example, a tire graded 150 would wear one-and-a half times (1½) as well on the government course as a tire graded 100.
The relative performance of tires depends upon the actual conditions of their use, however, and may depart significantly from the norm due to variations in driving habits, service practices and differences in road characteristics and climate.
These grades are molded on the sidewalls of passenger vehicle tires. The tires available as standard or optional equipment on your vehicle may vary with respect to grade.

Traction - AA, A, B & C

The traction grades, from highest to lowest, are AA, A, B and C. Those grades represent the tire's ability to stop on wet pavement as measured under controlled conditions on specified government test surfaces of asphalt and concrete. A tire marked C may have poor traction performance.

Temperature - A, B & C

The temperature grades are A (the highest), B, and C, representing the tire's resistance to the generation of heat and its ability to dissipate heat when tested under controlled conditions on a specified indoor laboratory test wheel.
Sustained high temperature can cause the material of the tire to degenerate and reduce tire life, and excessive temperature can lead to sudden tire failure. Grades B and A represent higher levels of performance on the laboratory test wheel than the minimum required by law.

⚠ WARNING

The traction grade assigned to this tire is based on straight ahead braking traction tests, and does not include acceleration, cornering, hydroplaning, or peak traction characteristics.

⚠ WARNING

■ Tire temperature

The temperature grade for this tire is established for a tire that is properly inflated and not overloaded. Excessive speed, underinflation, or excessive loading, either separately or in combination, can cause heat buildup and possible sudden tire failure. This can cause loss of vehicle control and serious injury or death.

Low aspect ratio tire (if equipped)

Low aspect ratio tires, whose aspect ratio is lower than 50, are provided for sporty looks.
Because the low aspect ratio tires are optimized for handling and braking, it may be more uncomfortable to ride in and there is more noise compare with normal tires.

⚠ CAUTION

Because the sidewall of the low aspect ratio tire is shorter than the
(Continued)

(Continued)

normal, the wheel and tire of the low aspect ratio tire is easier to be damaged. So, follow the instructions below.

- **When driving on a rough road or off road, drive cautiously because tires and wheels may be damaged. And after driving, inspect tires and wheels.**
- **When passing over a pothole, speed bump, manhole, or curb stone, drive slowly so that the tires and wheels are not damaged.**
- **If the tire is impacted, inspect the tire condition or contact a professional workshop. Kia recommends to visit an authorized Kia dealer/ service partner.**
- **To prevent damage to the tire, inspect the tire condition and pressure every 3,000 km.**

⚠ CAUTION

- **It is not easy to recognize the tire damage with your own eyes. But if there is the slightest hint of tire damage, even though you cannot see the tire damage with your own eyes, have the tire checked or replaced because the tire damage may cause air leakage from the tire.**
- **If the tire is damaged by driving on a rough road, off road, pothole, manhole, or curb stone, it will not be covered by the warranty.**
- **You can find out the tire information on the tire sidewall.**

FUSES

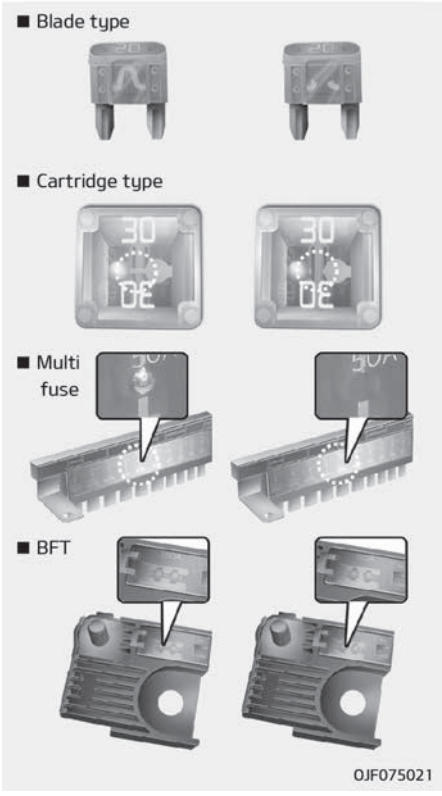

❈ Left side: Normal

Right side: blown

A vehicle's electrical system is protected from electrical overload damage by fuses.

This vehicle has 2 (or 3) fuse panels, one located in the driver's side panel bolster, the others in the engine compartment near the battery.

If any of your vehicle's lights, accessories, or controls do not work, check the appropriate circuit fuse. If a fuse has blown, the element inside the fuse will melt.

If the electrical system does not work, first check the driver's side fuse panel.

Before replacing a blown fuse, disconnect the negative battery cable.

Always replace a blown fuse with one of the same rating.

If the replacement fuse blows, this indicates an electrical problem. Avoid using the system involved and immediately consult a professional workshop. Kia recommends to consult an authorized Kia dealer/service partner.

Three kinds of fuses are used: blade type for lower amperage rating, cartridge type, and multi fuse for higher amperage ratings.

⚠ WARNING

■ Fuse replacement

- **Never replace a fuse with anything but another fuse of the same rating.**
- **A higher capacity fuse could cause damage and possibly a fire.**
- **Never install a wire or aluminum foil instead of the proper fuse even as a temporary repair. It may cause extensive wiring damage and a possible fire.**
- **Do not arbitrarily modify or add-on electric wiring of the vehicle.**

⚠ CAUTION

Do not use a screwdriver or any other metal object to remove fuses because it may cause a short circuit and damage the system.

✻ NOTICE

The actual fuse/relay panel label may differ from equipped items.

⚠ CAUTION

- **When replacing a blown fuse or relay with a new one, make sure the new fuse or relay fits tightly into the clips. The incomplete fastening fuse or relay may cause the vehicle wiring and electric systems damage and a possible fire.**
- **Do not remove fuses, relays and terminals fastened with bolts or nuts. The fuses, relays and terminals may be fastened incompletely, and it may cause a possible fire. If fuses, relays and terminals fastened with bolts or nuts are blown, consult a professional workshop. Kia recommends to consult an authorized Kia dealer/service partner.**

(Continued)

(Continued)

- **Do not input any other objects except fuses or relays into fuse/relay terminals such as a driver or wiring. It may cause contact failure and system malfunction.**
- **Do not plug in screwdrivers or aftermarket wiring into the terminal originally designed for fuse and relays only. The electrical system and wiring of the vehicle interior may be damaged or burned due to contact failure.**

✻ NOTICE

■ Random wiring prohibited when retrofitting equipment

Use of random wiring in the vehicle might cause danger due to failure and damage of the vehicle's performance.
Using random wires especially when retrofitting AVN or theft alarm system, remote engine control, car phone or radio might damage the vehicle or cause fire.

✻ NOTICE

■ Remodeling Prohibited

Do not try remodeling the vehicle in any way. It is illegal, and may affect the vehicle's performance, durability, and safety. Warranty is also not provided for problems caused by remodeling.
Be aware of safety problems caused by remodeling the vehicle with unauthorized electrical devices(lamp, black box, electrical equipment, diagnostic device, communication device, etc.). It might cause malfunction of the vehicle, wiring damage, battery discharge, connector damage, or fire. the vehicle or cause fire.

✻ NOTICE

■ Window tinting precaution

Window tint(especially metallic film) might cause communication disorder or poor radio reception, and mal-

(Continued)

(Continued)

function of the automatic lighting system due to excessive change of illumination inside the vehicle. The solution used might also flow into electric, electronic devices causing disorder and failure.

Inner panel fuse replacement

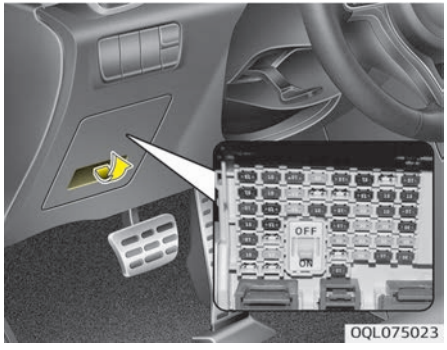

1. Turn the ignition switch and all other switches off.
2. Open the fuse panel cover.
   If the switch is located in the "OFF", caution will be displayed in the cluster.

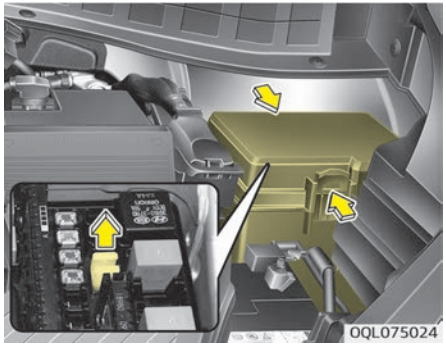

3. Pull the suspected fuse straight out. Use the removal tool provided in the main fuse box in the engine compartment.
4. Check the removed fuse; replace it if it is blown.
   Spare fuses are provided in the instrument panel fuse panel (or in the engine compartment fuse panel).
5. Push in a new fuse of the same rating, and make sure it fits tightly in the clips.

If it fits loosely, consult a professional workshop. Kia recommends to consult an authorized Kia dealer/service partner.
If you do not have a spare, use a fuse of the same rating from a circuit you may not need for operating the vehicle, such as the cigarette lighter fuse.
If the headlights or taillights, stoplights, courtesy lamp, day time running lights (D.R.L) do not work and the fuses are OK, check the fuse panel in the engine compartment. If a fuse is blown, it must be replaced.

Fuse switch

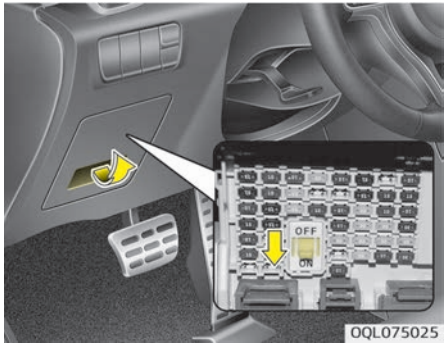

Always, put the fuse switch at the ON position.

If you move the switch to the OFF position, some items such as audio and digital clock must be reset and transmitter (or smart key) may not work properly. If the fuse switch is in OFF, a warning sign will illuminate on the cluster.

⚠ CAUTION

- **Put all switches in ON when driving.**
- **If the vehicle remains idle for over 1 month, put all switches in OFF to prevent the batteries from being discharged.**
- **Excluding long-term parking for over 1 month, the contact points of switches may wear out upon extensive use. Please refrain from excessive use of switches.**

Engine compartment fuse replacement

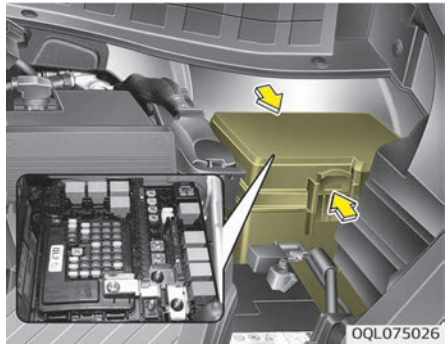

1. Turn the ignition switch and all other switches off.
2. Remove the fuse panel cover by pressing the tab and pulling the cover up. When the blade type fuse is disconnected, remove it by using the clip designed for changing fuses located in the engine room fuse box. Upon removal, securely insert reserve fuse of equal quantity.
3. Check the removed fuse; replace it if it is blown. To remove or insert the fuse, use the fuse puller in the engine compartment fuse panel.
4. Push in a new fuse of the same rating, and make sure it fits tightly in the clips. If it fits loosely, consult a professional workshop. Kia recommends to consult an authorized Kia dealer/service partner.

⚠ CAUTION

After checking the fuse panel in the engine compartment, securely install the fuse panel. If not, cover through the audible clicking sound. Electrical failures may occur from water contact.

Multi fuse

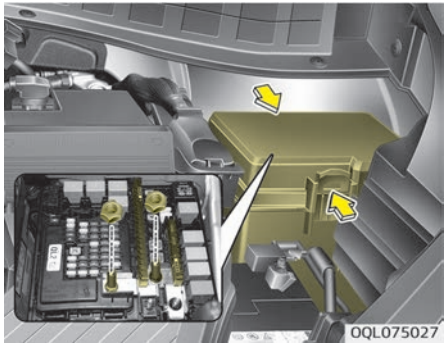

If the main fuse is blown, it must be removed as follows:

1. Turn off the engine.
2. Disconnect the negative battery cable.
3. Remove the nuts shown in the picture above.
4. Replace the fuse with a new one of the same rating.
5. Reinstall in the reverse order of removal

Main fuse

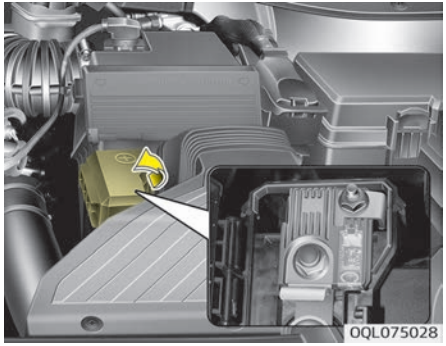

If the main fuse is blown, it must be removed as follows:

1. Turn off the engine.
2. Disconnect the negative battery cable.
3. Remove the nuts shown in the picture above.
4. Replace the fuse with a new one of the same rating.
5. Reinstall in the reverse order of removal.

✻ NOTICE

The electronic system may not function correctly even when the engine room and internal fuse box's individual fuses are not disconnected. In such case the cause of the problem may be disconnection of the main fuse (BFT type), which is located inside the positive battery terminal (+) cap. Since the main fuse is designed more intricately than other parts, visit a professional workshop. Kia recommends to visit the nearest authorized Kia dealer/service partner.

⚠ CAUTION

Visually inspect the battery cap for secure closing. If the battery cap is not securely latched, the electrical system may be damaged to due influx of moisture into the system.

✻ NOTICE

If the multi fuse is blown, consult a professional workshop. Kia recommends to consult an authorized Kia dealer/service partner.

Fuse/relay panel description

■ Driver's side fuse panel

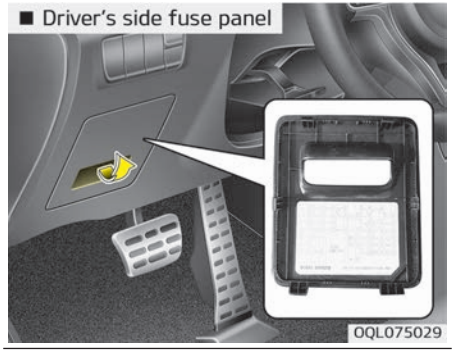

■ Engine compartment fuse panel

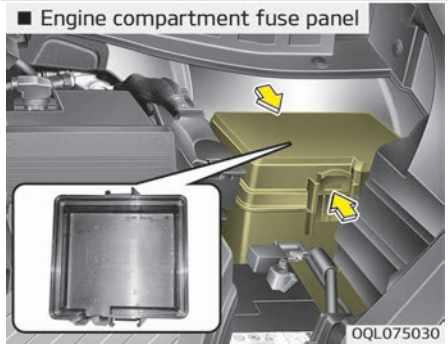

■ Engine compartment fuse panel (Battery terminal cover)

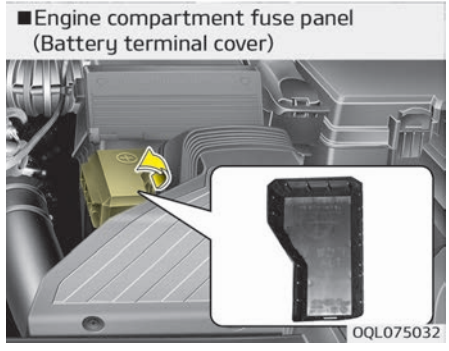

Inside the fuse/relay panel covers, you can find the fuse/relay label describing fuse/relay name and capacity.

✻ NOTICE

Not all fuse panel descriptions in this manual may be applicable to your vehicle. It is accurate at the time of printing. When you inspect the fuse panel in your vehicle, refer to the fuse panel label.

Driver's side fuse panel

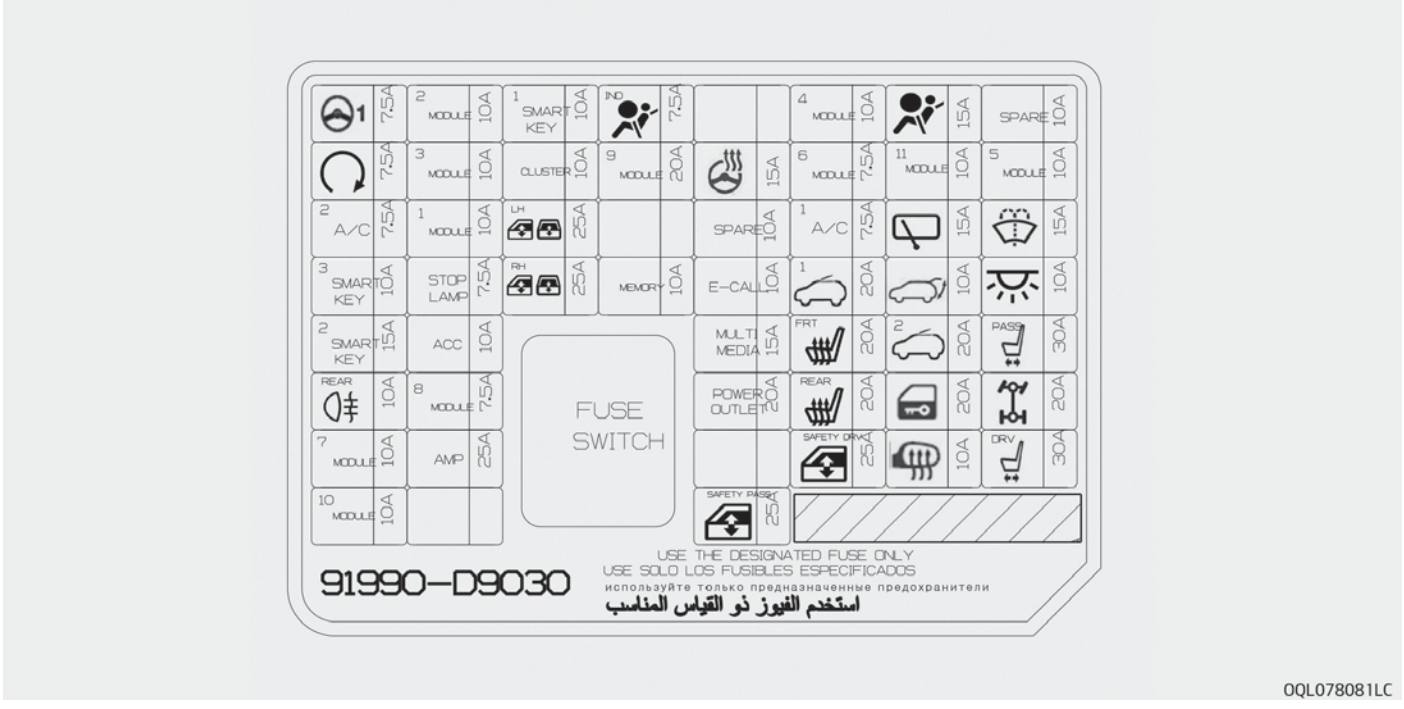

Instrument panel (Driver's side fuse panel)

Fuse Name	Symbol	Fuse rating	Protected Component
MDPS		7.5A	MDPS Unit
MODULE 2		10A	-
SMART KEY 1		10A	Smart Key Control Module/Immobilizer Module
A/BAG IND		7.5A	Instrument Cluster [Audio & Manual A/C] Hazard Switch [Audio & Auto A/C] A/C Control Module [Navigation] Center Facia Lamp
MODULE 4		10A	Console Switch, Blind Spot Detection Radar LH/RH, AWD ECM, Crash Pad Switch, BCM, Smart Parking Assist Control Module, Lane Departure Warning Control Module
A/BAG		15A	SRS Control Module
START		7.5A	[W/O Smart Key & IMMO.] ICM Relay Box (Burglar Alarm Relay) [With Smart Key / IMMO.] Transaxle Range Switch, ECM, Ignition Lock & Clutch Switch, Smart Key Control Module, E/R Junction Block (RLY. 11 - Start Relay)
MODULE 3		10A	Front/Rear Seat Warmer Control Module, ATM Shift Lever ILL., Front Air Ventilation Seat Control Module, A/V & Navigation Head Unit, Auto Head Lamp Leveling Device Module, Electro Chromic Mirror, Crash Pad Switch, A/C Control Module, Multipurpose Check Connector, Head Lamp Leveling Device Actuator LH/RH
CLUSTER		10A	Instrument Cluster
MODULE 9		20A	PCB Block (Fuse - AEB, MODULE, ABS 3, ECU 6, TCU 2)

Fuse Name	Symbol	Fuse rating	Protected Component
HTD STRG		15A	BCM
MODULE 6		7.5A	Front/Rear Seat Warmer Control Module, Front Air Ventilation Seat Control Module
MODULE 5		10A	BCM, Smart Key Control Module
A/CON 2		7.5A	A/C Control Module
MODULE 1		10A	BCM, ATM Shift Lever
P/ WINDOW LH		25A	Power Window Main Switch, Passenger Power Window Switch
A/CON 1		7.5A	A/C Control Module, Cluster Ionizer, E/R Junction Block (RLY.4-PTC Heater Relay #3, RLY.5-PTC Heater Relay #2, RLY.13-Blower Relay)
RR WIPER		15A	Rear Wiper Motor, ICM Relay Box (Rear Wiper Relay)
WASHER		15A	Multifunction Switch
SMART KEY 3		10A	[W/O Smart Key] Immobilizer Module [With Smart Key] Smart Key Control Module, Start/Stop Button Switch
STOP LAMP		7.5A	Smart Key Control Module, Stop Lamp Switch
P/ WINDOW RH		25A	Power Window Main Switch, Passenger Power Window Switch
MEMORY		10A	Wireless Charger, Instrument Cluster, Data Link Connector, BCM, Rain Sensor, ICM Relay Box (Outside Mirror Folding/Unfolding Relay)
E-CALL		10A	-
SUN ROOF 1		20A	Panorama Sunroof
TAIL GATE		10A	Tailgate Relay

Fuse Name	Symbol	Fuse rating	Protected Component
INTERIOR LAMP		10A	Ignition Key Ill.& Door Warning Switch, Room Lamp, Overhead Console Lamp, Front Vanity Lamp LH/RH, Rear Personal Lamp LH/RH, Luggage Lamp, Glove Box Lamp
SMART KEY 2		15A	Smart Key Control Module
MODULE 8		7.5A	Key Solenoid
MULTI MEDIA		15A	Audio, A/V & Navigation Head Unit, Rear USB Charger
S/HEATER FRT		20A	Front Seat Warmer Control Module, Front Air Ventilation Seat Control Module
SUN ROOF 2		20A	Panorama Sunroof
P/SEAT PASS		30A	Passenger Seat Manual Switch
RR FOG LAMP		10A	ICM Relay Box (Rear Fog Lamp Relay)
POWER OUTLET		20A	Front Power Outlet #1 (Front Cigarette Lighter)
S/HEATER RR		20A	Rear Seat Warmer Control Module
DOOR LOCK		20A	Door Lock/Unlock Relay
AWD		20A	AWD ECM
MODULE 7		10A	Hazard Switch, Driver/Passenger Smart Key Outside Handle, AEB Sensor
AMP		25A	AMP

Fuse Name	Symbol	Fuse rating	Protected Component
SAFETY P/ WINDOW		25A	Driver's seat Safety Power Window Module
		25A	Passenger's seat Safety Power Window Module
HTD MIRROR		10A	Driver/Passenger Power Outside Mirror
P/SEAT DRV		30A	Driver Seat Manual Switch
ACC	ACC	10A	Rear USB Charger, AMP, Low DC-DC Converter (AMP/Audio), Power Outside Mirror Switch, PCB Block (Power Outlet Relay), Smart Key Control Module, Audio, A/V & Navigation Head Unit, BCM, Wireless Charger

Engine compartment fuse panel

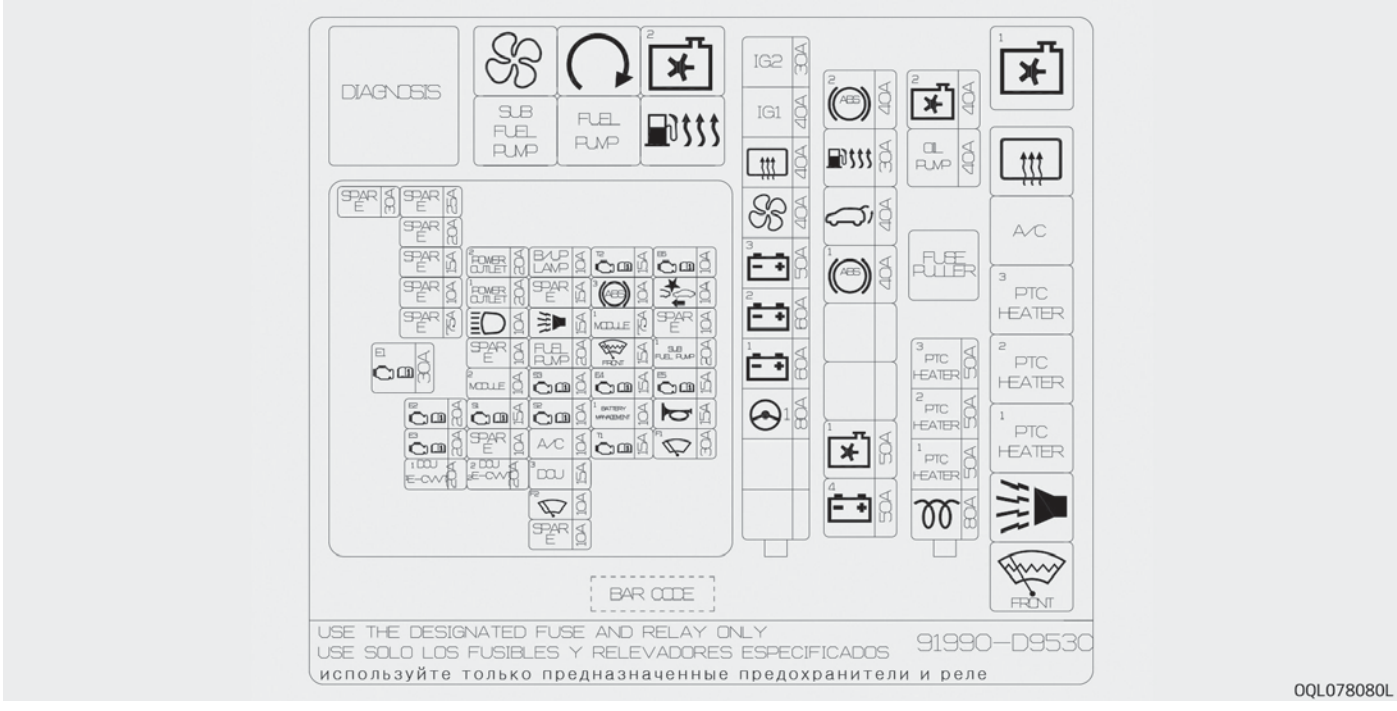

Engine compartment fuse panel (Battery terminal cover)

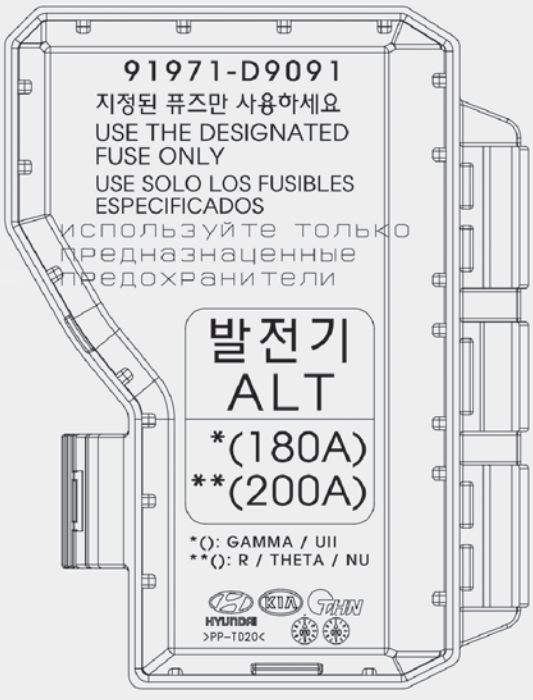

OQL075033

Engine room compartment fuse panel

Fuse Name		Symbol	Fuse Rating	Circuit Protected
MULTI FUSE	MDPS		80A	MDPS Unit
	B+ 1		60A	Smart Junction Block (IPS 2 (5CH), IPS 3 (2CH), IPS 4 (2CH), IPS 5 (2CH), IPS 6 (1CH), Fuse - AMP)
	B+ 2		60A	Smart Junction Block (IPS 1 (5CH), Fuse - SMART KEY 3, STOP LAMP, SMART KEY 2, MODULE 8 , RR FOG LAMP, MODULE 7)
	B+ 3		50A	Smart Junction Block (Fuse - SUN ROOF 1, S/HEATER FRT, SUN ROOF 2, S/HEATER RR, SAFETY P/WINDOW, Power Window Relay (Fuse - P/ WINDOW LH, P/ WINDOW RH))
	BLOWER		40A	RLY. 13 (Blower Relay)
	REAR HEATED		40A	RLY. 2 (Rear Defogger Relay)
	IG1	IG 1	40A	[W/O Smart Key] Ignition Switch, [With Smart Key] PCB Block (PDM (IG1)/PDM (ACC) Relay)
	IG2	IG 2	30A	RLY. 11 (Start Relay), [W/O Smart Key] Ignition Switch, [With Smart Key] PCB Block (PDM (IG2) Relay)
	GLOW		80A	Glow Relay Unit
	PTC HEATER 1	1 PTC HEATER	50A	RLY. 6 (PTC Heater 1 Relay)
	PTC HEATER 2	2 PTC HEATER	50A	RLY. 5 (PTC Heater 2 Relay)
	PTC HEATER 3	3 PTC HEATER	50A	RLY. 4 (PTC Heater 3 Relay)

Fuse Name		Symbol	Fuse Rating	Circuit Protected
FUSE	B+4		50A	Smart Junction Block (Fuse - TAIL GATE, P/SEAT PASS, DOOR LOCK, AWD, P/SEAT DRV, Leak Current Autocut Device Fuse - MEMORY, INTERIOR LAMP, MULTI MEDIA)
	COOLING FAN 1		50A	RLY.1 (Cooling Fan 1 Relay), RLY. 9 (Cooling Fan 2 Relay)
	ABS1		40A	ABS/ESC Control Module, Multipurpose Check Connector
	T/GATE OPEN		40A	Power Tail Gate Module
	FUEL FILTER HEAT-ER		30A	RLY. 10 (Fuel Filter Heater Relay)
	ABS2		40A	ABS/ESC Control Module
	COOLING FAN 2		40A	RLY.1 (Cooling Fan 1 Relay), RLY. 9 (Cooling Fan 2 Relay)
	INVERTER		40A	Oil Pump Inverter
	DCU1, E-CVVT 1		20A	[THETA-II 2.4 GDI] PCM, Dosing Control Unit1
	DCU2, E-CVVT 2		20A	[THETA-II 2.4 GDI] PCM, Dosing Control Unit2
	DCU 3		15A	Dosing Control Unit3
	E-CVVT 1		20A	[THETA-II 2.4L GDI] PCM
	E-CVVT 2		20A	[THETA-II 2.4L GDI] PCM
	WIPER 1		30A	[W/O Smart Key] Ignition Switch, [With Smart Key] PDM (IG2) Relay
	TCU 1		15A	PCM/TCM
	WIPER 2		10A	BCM

Fuse Name		Symbol	Fuse Rating	Circuit Protected
FUSE	ECU 3		20A	[NU 2.0L MPI/THETA-II 2.4L GDI/NU 2.0L FFV] PCM/ECM
	HORN		15A	Horn Relay
	BMS	BATTERY MANAGEMENT	10A	[NU 2.0L MPI/NU 2.0L FFV] Battery Sensor
	SENSOR 2		10A	[R 2.0L] Fuel Pump Relay, Crankshaft Position Sensor, EGR Cooling Bypass Solenoid Valve, Mass Air Flow Sensor, Oil Pump Solenoid Valve, E/R Junction Block (RLY. 6 - PTC Heater 1 Relay) [NU 2.0L MPI/NU 2.0L FFV] Fuel Pump Relay, Oil Control Valve #2, Variable Intake Solenoid Valve, Camshaft Position Sensor #1/#2, Sub Fuel Solenoid Valve, E/R Junction Block (RLY. 14 - Sub Fuel Pump Relay) [THETA-II 2.4L GDI] Fuel Pump Relay, Oil Control Valve, Purge Control Solenoid Valve, Variable Intake Solenoid Valve
	SENSOR 1		15A	[R 2.0L] Lambda Sensor #1/#2, Electronic VGT Actuator, Rail Pressure Regulating Valve, Fuel Pressure Regulating Valve, PM (Particulate Matter) Sensor [NU 2.0L MPI/NU 2.0L FFV] Oxygen Sensor (Up/Down), Purge Control Solenoid Valve, Oil Control Valve #1 [THETA-II 2.4L GDI] Oxygen Sensor (Up/Down)
	ECU 2		20A	[R 2.0L] ECM, [NU 2.0L MPI/NU 2.0L FFV] Ignition Coil #1/#2/#3/#4, Condenser, [THETA-II 2.4L GDI] Ignition Coil #1/#2/#3/#4
	ECU 4		15A	PCM/ECM

Fuse Name		Symbol	Fuse Rating	Circuit Protected
FUSE	SENSOR 3		10A	[R 2.0L] Stop Lamp Switch, E/R Junction Block (RLY. 1 - Cooling Fan 1 Relay, RLY.10 - Fuel Filter Heater Relay) [NU 2.0L MPI/NU 2.0L FFV] Injector #1/#2/#3/#4, E/R Junction Block (RLY. 1 - Cooling Fan 1 Relay), [THETA-II 2.4L GDI] E/R Junction Block (RLY. 1 - Cooling Fan High/Low Relay)
	SUB FUEL PUMP	SUB FUEL PUMP	20A	[NU 2.0L MPI/NU 2.0L FFV] E/R Junction Block (RLY. 14 - Sub Fuel Pump Relay)
	FUEL PUMP	FUEL PUMP	20A	Fuel Pump Relay
	AEB	AEB	10A	AEB Sensor
	A/C	A/C	10A	Air Control Unit Relay
	MODULE	MODULE	10A	[NU-2.0L MPI] Sub Fuel Solenoid Unit, Sub Fuel Relay [R 2.0L TCI] Rail Pressure Valve, Fuel Filter Relay
	MODULE	MODULE	7.5A	[R 2.0L] Glow Relay Unit, Fuel Filter Warning Sensor, E/R Junction Block (RLY. 10 - Fuel Filter Heater Relay)
	B/A HORN		10A	E/R Junction Block (RLY. 7 - B/A Horn Relay)
	H/LAMP HI		10A	BI-Function H/LP Relay

Fuse Name		Symbol	Fuse Rating	Circuit Protected
FUSE	ABS 3		10A	ABS/ESC Control Module
	P/OUTLET 1		20A	Front Power Outlet #2
	ECU 6		10A	PCM/ECM
	TCU 2		15A	[A/T] TCM, Transaxle Range Switch, [M/T] Back-Up Lamp Switch
	B/UP LAMP		10A	Rear Bumper Lamp LH/RH, Electro Chromic Mirror
	POWER OUTLET2		20A	Rear Power Outlet
	ECU 1		30A	Engine Control Relay
	FCA		10A	Forward Collision-avoidance Assist

Relay

Symbol	Relay Name	Type
	Cooling Fan 1 Relay	MINI
	Rear Defogger Relay	MICRO
	PTC Heater Relay #3	MICRO
	PTC Heater Relay #2	MICRO
	PTC Heater Relay #1	MICRO
	B/A Horn Relay	MICRO

Symbol	Relay Name	Type
	Cooling Fan 2 Relay	MICRO
	Fuel Filter Heater Relay	MICRO
	Start Relay	MICRO
	Blower Relay	MICRO
SUB FUEL PUMP	Sub Fuel Pump Relay	MICRO
A/C	Air Control Relay	MICRO
FUEL PUMP	Fuel Pump Relay	MICRO

LIGHT BULBS

Bulb replacement precaution

Please prepare bulbs with appropriate standards in case of emergencies (Refer to "Bulb wattage" on page 9-07 for further information).
When changing bulbs and sorts, first turn off the engine at a safe place, firmly apply the side brake and take out the battery's negative (-) terminal.

⚠ WARNING

■ Working on the lights

Prior to working on the light, firmly apply the parking brake, ensure that the ignition switch is turned to the LOCK position and turn off the lights to avoid sudden movement of the vehicle and burning your fingers or receiving an electric shock.

Use only the bulbs of the specified wattage.

⚠ WARNING

Be sure to replace the burned out bulb with one of the same wattage rating. Otherwise, it may cause extensive wiring damage and possible fire.

⚠ CAUTION

If you don't have necessary tools, the correct bulbs and the expertise, consult a professional workshop. Kia recommends to consult an authorized Kia dealer/service partner. In many cases, it is difficult to replace vehicle light bulbs because other parts of the vehicle must be removed before you can get to the bulb. This is especially true if you have to remove the headlight assembly to get to the bulb(s). Removing/installing the headlight assembly can result in damage to the vehicle.

⚠ CAUTION

- **If unauthentic parts or substandard lights are used when changing lights, it may lead to fuse disconnection and malfunction, and other wiring damages.**
- **Do not install extra lamps or LED to the vehicle. If supplementary lights are installed, it may lead to lamp malfunction and flickering of the lights. In addition, the fuse box and other writing may be damaged.**

- Lamp part malfunction due to network failure
  The headlamp, taillight, and fog light may lit up when the head lamp switch is turned ON, and not light up when the taillight or for light switch is turned ON. This may be cause by network failure or vehicle electrical control system malfunction. If there is a problem, have the system serviced by a professional workshop. Kia recommends to visit an authorized Kia dealer/service partner.

- **Lamp part malfunction due to electrical control system stabilization**
  A normally functioning lamp may flicker momentarily. This momentary occurrence is due to stabilization unction of the vehicle's electrical on control system. If the lamp soon returns to normal, the vehicle does not require service.
  However, if the lamp goes out after he momentary flickering, or the flickering continues, have the system serviced by a professional workshop. Kia recommends to visit an authorized Kia dealer/service partner.

✻ NOTICE

- If the light bulb or lamp connector is removed from an operating lamp activated by electricity, the fuse box's electronic device may scan it as a malfunction. Therefore, a lamp malfunction history may be recorded in Diagnostic Trouble Code (DTC) in the fuse box.

(Continued)

(Continued)

- It is normal for an operating lamp may blink temporarily. Since this occurrence is due stabilization function of the vehicle's electronic control device, if the lamp lights up normally after temporary blinking, there is no problem in the vehicle.
  However, if the lamp continues to blink several times or turn off completely, there may be an error in the vehicle's electronic control device. In this case, have the vehicle checked by a professional workshop immediately. Kia recommends to visit an authorized Kia dealer/service partner.

✻ NOTICE

Have the headlight aiming adjusted after an accident or after the headlight assembly is reinstalled by a professional workshop. Kia recommends to visit an authorized Kia dealer/service partner.

✻ NOTICE

After driving in heavy rain or washing, headlamp and tail lamp lenses could appear frosty. This condition is caused by the temperature difference between the lamp inside and outside. This is similar to the condensation on your windows inside your vehicle during the rain and doesn't indicate a problem with your vehicle. If the water leaks into the lamp bulb circuitry, have the vehicle checked by a professional workshop. Kia recommends to visit an authorized Kia dealer/service partner.

✻ NOTICE

■ Traffic Change (For Europe)

The low beam light distribution is asymmetric. If you go abroad to a country with opposite traffic direction, this asymmetric part will dazzle oncoming car drivers. To prevent

(Continued)

(Continued)

dazzle, ECE regulations demand several technical solutions (ex. automatic change system, adhesive sheet, down aiming). This headlamps are designed not to dazzle opposite drivers. So, you need not change your headlamps in a country with opposite traffic direction.

Light bulb position (Front)

■ Head lamp - Type A

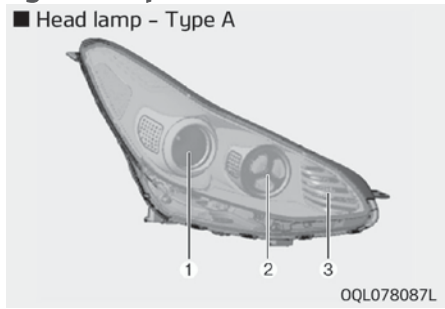

■ Head lamp - Type B

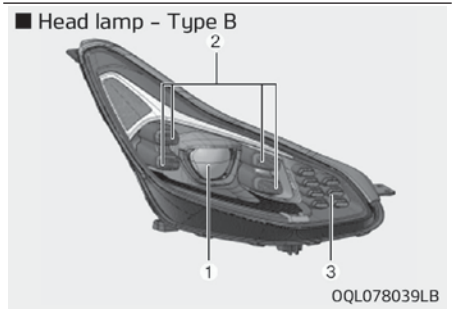

■ Fog lamp - Type A

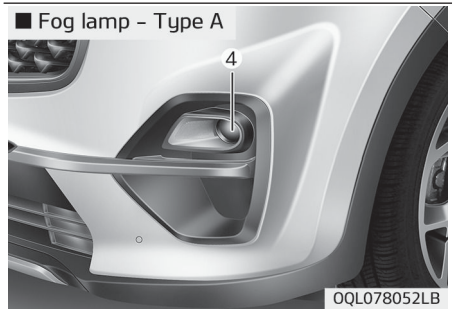

■ Fog lamp - Type B

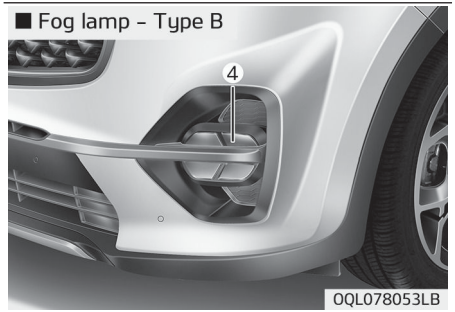

1. Headlamp (Low/High)
2. Day time running lamp / Position lamp
3. Front turn signal lamp
4. Front Fog lamp
   - Type A (Bulb),
   - Type B (LED)

Light bulb position (Rear)

■ Rear combination lamp
- Type A

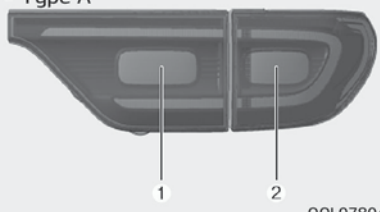

OQL078042L

■ Rear combination lamp
- Type B

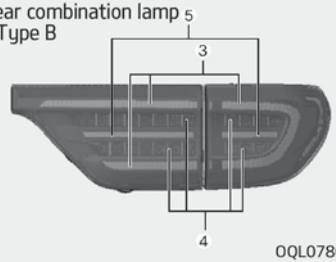

OQL078043LB

■ Rear turn signal & Back up lamp – Type A

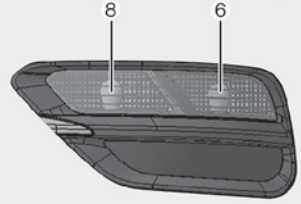

OQL078070LB

■ Rear turn signal & Back up lamp – Type B

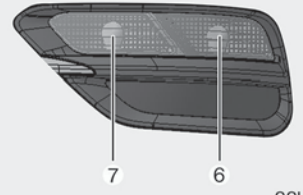

OQL078085LB

■ License plate lamp

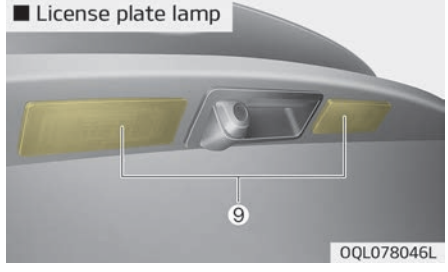

OQL078046L

■ High mounted stop lamp

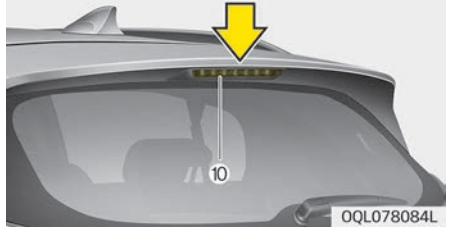

OQL078084L

1. Tail lamp (BULB type)
2. Stop and tail lamp (BULB type)
3. Tail lamp (LED type)
4. Stop lamp (LED type)
5. Stop and tail lamp (LED type)
6. Rear turn signal lamp
7. Back up lamp
8. Rear fog lamp
9. License plate lamp
10. High mounted stop lamp

Light bulb position (Side)

■ Type A

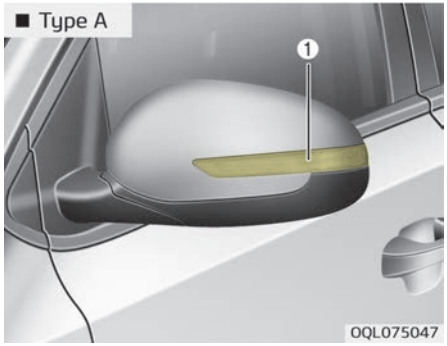

■ Type B

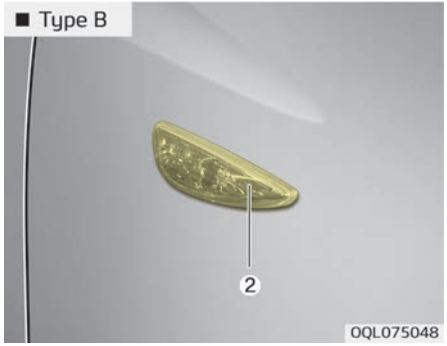

1. Side repeater lamp (LED type)
2. Side repeater lamp (Bulb type)

Headlamp (High-Low beam) bulb replacement

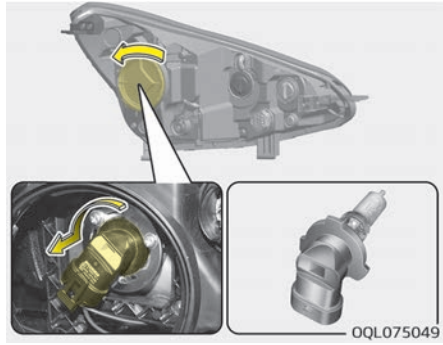

1. Open the hood.
2. Remove the headlamp bulb cover by turning it counterclockwise.
3. Disconnect the headlamp bulb socket-connector.
4. Remove the bulb-socket from the headlamp assembly by turning the bulb-socket counterclockwise until the tabs on the bulb-socket align with the slots on the headlamp assembly.
5. Install a new bulb-socket assembly in the headlamp assembly by aligning the tabs on the bulb-socket with the slots in the headlamp assembly. Push the bulb-socket into the headlamp assembly and turn the bulb-socket clockwise.
6. Install the headlamp bulb cover by turning it clockwise.

Headlamp bulb

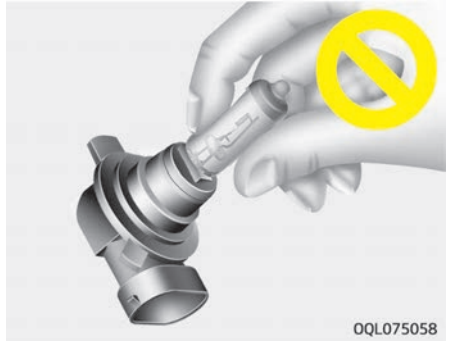

⚠ WARNING

■ Halogen bulbs

- **Halogen bulbs contain pressurized gas that will produce flying pieces of glass if broken.**
- **Always handle them carefully, and avoid scratches and abrasions. If the bulbs are lit, avoid contact with liquids. Never touch the glass with bare hands. Residual oil may cause the bulb to overheat and burst when lit.**
  A bulb should be operated only when installed in a headlight.
- **If a bulb becomes damaged or cracked, replace it immediately and carefully dispose of it.**
- **Wear eye protection when changing a bulb. Allow the bulb to cool down before handling it.**

Front turn signal lamp bulb replacement

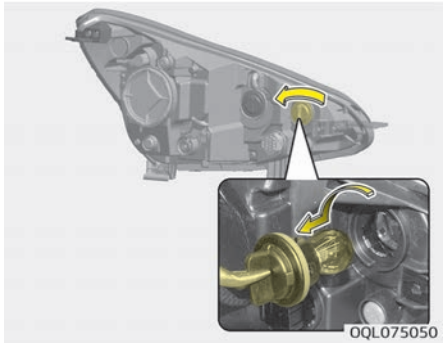

1. Open the hood.
2. Remove the bulb-socket from the headlamp assembly by turning the bulb-socket counterclockwise until the tabs on the bulb-socket align with the slots on the headlamp assembly.
3. Remove the bulb from the bulb-socket by pressing it in and rotating it counterclockwise until the tabs on the bulb align with the slots in the bulb-socket. Pull the bulb out of the bulb-socket.
4. Insert a new bulb by inserting it into the bulb-socket and rotating it until it locks into place.
5. Install the socket in the headlamp assembly by aligning the tabs on the bulb-socket with the slots in the assembly. Push the bulb-socket into the headlamp assembly and turn the socket clockwise.

Position lamp + DRL bulb replacement

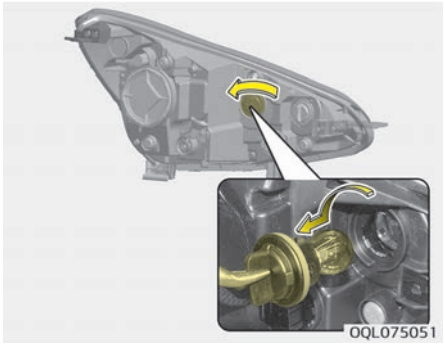

1. Open the hood.

2. Remove the bulb-socket from the headlamp assembly by turning the bulb-socket counterclockwise until the tabs on the bulb-socket align with the slots on the headlamp assembly.
3. Remove the bulb from the bulb-socket by pressing it in and rotating it counterclockwise until the tabs on the bulb align with the slots in the bulb-socket. Pull the bulb out of the bulb-socket.
4. Insert a new bulb by inserting it into the bulb-socket and rotating it until it locks into place.
5. Install the socket in the headlamp assembly by aligning the tabs on the bulb-socket with the slots in the assembly. Push the bulb-socket into the headlamp assembly and turn the socket clockwise.

Front fog lamp (Bulb and LED type) bulb replacement

■ Type A



■ Type B

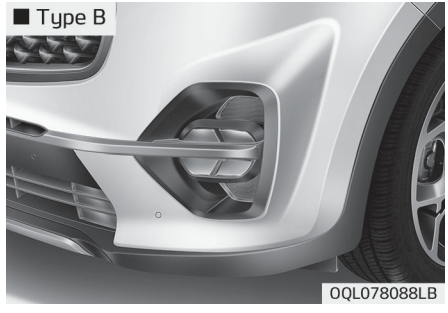

If the front fog lamp (Bulb and LED type) does not operate, have your vehicle checked by a professional workshop. Kia recommends to visit an authorized Kia dealer/service partner.

Stop and tail lamp bulb replacement

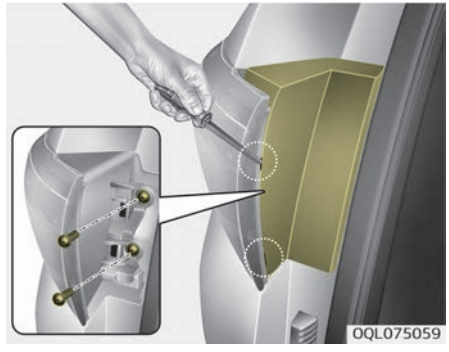

1. Open the tailgate.
2. Open the service cover.
3. Loosen the light assembly retaining screws with a cross-tip screwdriver.

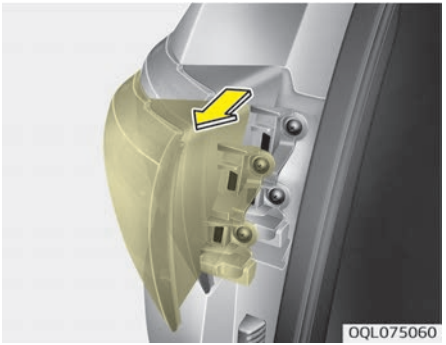

4. Remove the rear combination lamp assembly from the body of the vehicle.
5. Disconnect the rear combination lamp connector.

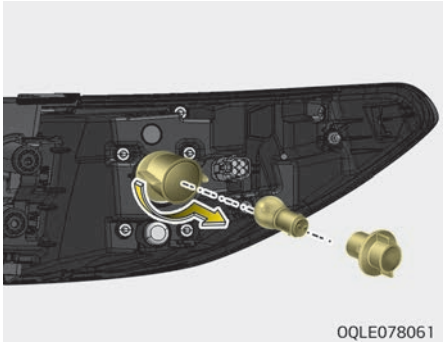

6. Remove the socket from the assembly by turning the socket counterclockwise until the tabs on the socket align with the slots on the assembly.
7. Remove the bulb from the socket by pressing it in and rotating it counterclockwise until the tabs on the bulb align with the slots in the socket. Pull the bulb out of the socket.
8. Insert a new bulb by inserting it into the socket and rotating it until it locks into place.
9. Install the socket in the assembly by aligning the tabs on the socket with the slots in the assembly. Push the socket into the assembly and turn the socket clockwise.
10. Install the rear combination lamp assembly to the body of the vehicle.
11. Install the service cover.

Tail lamp (inside) bulb replacement

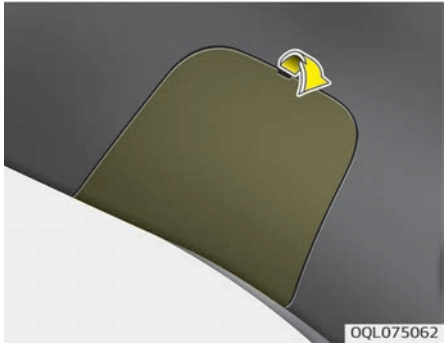

1. Open the tailgate.
2. Remove the service cover.

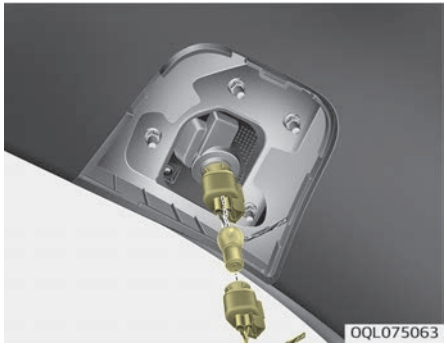

3. Remove the socket from the assembly by turning the socket counterclockwise until the tabs on the socket align with the slots on the assembly.
4. Remove the bulb from the socket by pressing it in and rotating it counter-clockwise until the tabs on the bulb align with the slots in the socket. Pull the bulb out of the socket.
5. Insert a new bulb by inserting it into the socket and rotating it until it locks into place.
6. Install the socket in the assembly by aligning the tabs on the socket with the slots in the assembly. Push the socket into the assembly and turn the socket clockwise.
7. Install the service cover by putting it into the service hole.

Stop and tail lamp (LED type) bulb replacement

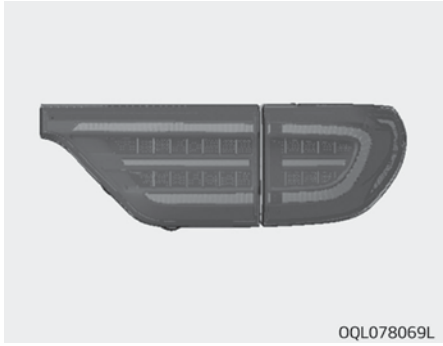

If the stop and tail lamp (LED) does not operate, have your vehicle checked by a professional workshop. Kia recommends to visit an authorized Kia dealer/service partner.

Back-up lamp and Rear turn signal lamp bulb replacement



If the Back-up lamp and Rear turn signal lamp does not operate, have your vehicle checked by a professional workshop. Kia recommends to visit an authorized Kia dealer/service partner.

High mounted stop lamp bulb replacement

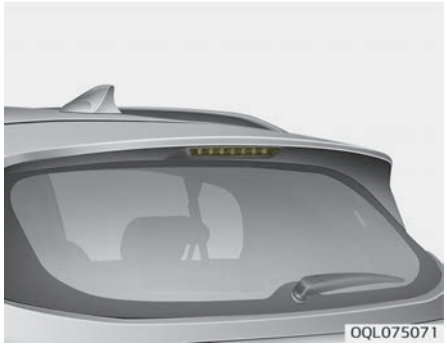

If the high mounted stop lamp (LED) does not operate, have your vehicle checked by a professional workshop. Kia recommends to visit an authorized Kia dealer/service partner.

License plate light bulb replacement



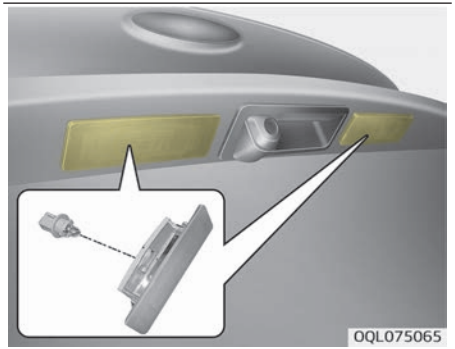

1. Using a flat-blade screwdriver, gently pry the lens cover from lamp housing.
2. Remove the socket from the assembly by turning the socket counterclockwise until the tabs on the socket align with the slots on the assembly.
3. Remove the bulb from bulb-socket by pulling it out.
4. Insert a new bulb by inserting it into the bulb-socket.
5. Install the socket in the assembly by aligning the tabs on the socket with the slots in the assembly. Push the socket into the assembly and turn the socket clockwise.
6. Align the lens cover tabs with the lamp housing notches and snap the lens into place.

Side repeater lamp (LED type) bulb replacement



If the side repeater lamp (LED type) does not operate, have your vehicle checked by a professional workshop. Kia recommends to visit an authorized Kia dealer/service partner.

Side repeater lamp (Bulb type) bulb replacement



1. Remove the lamp assembly from the vehicle by prying the lens and pulling the assembly out.
2. Disconnect the bulb electrical connector.
3. Separate the socket and the lens parts by turning the socket counterclockwise until the tabs on the socket align with the slots on the lens part.
4. Remove the bulb by pulling it straight out.
5. Insert a new bulb in the socket.
6. Reassemble the socket and the lens part.
7. Connect the bulb electrical connector.
8. Reinstall the lamp assembly to the body of the vehicle.

Map lamp bulb replacement



If the map lamp (bulb and LED type) does not operate, have your vehicle checked by a professional workshop. Kia recommends to visit an authorized Kia dealer/service partner.

Vanity mirror lamp bulb replacement

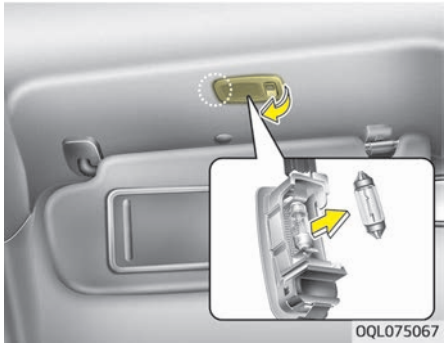

⚠ WARNING

Prior to working on the interior lamps, ensure that the "OFF" button is depressed to avoid burning your fingers or receiving an electric shock.

1. Using a flat-blade screwdriver, gently pry the lamp assembly from interior.
2. Remove the bulb by pulling it straight out.
3. Install a new bulb in the socket.
4. Install the lamp assembly to interior.

⚠ CAUTION

Be careful not to dirty or damage the lens, lens tab, and plastic housings.

Room lamp bulb replacement

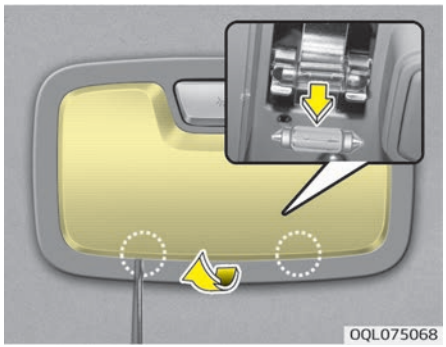

⚠ WARNING

Prior to working on the interior lamps, ensure that the "OFF" button is depressed to avoid burning your fingers or receiving an electric shock.

1. Using a flat-blade screwdriver, gently pry the lens cover from lamp housing.
2. Remove the bulb by pulling it straight out.
3. Install a new bulb in the socket.
4. Align the lens cover tabs with the lamp housing notches and snap the lens into place.

⚠ CAUTION

Be careful not to dirty or damage the lens, lens tab, and plastic housings.

Personal lamp bulb replacement

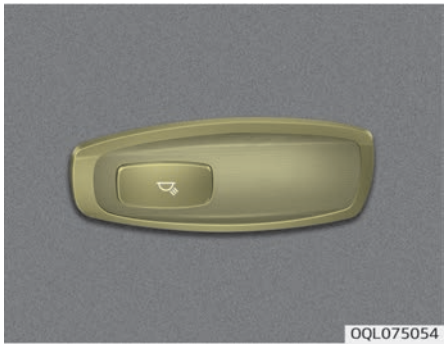

If the personal lamp (LED) does not operate, have your vehicle checked by a professional workshop. Kia recommends to visit an authorized Kia dealer/ service partner.

Glove box lamp bulb replacement

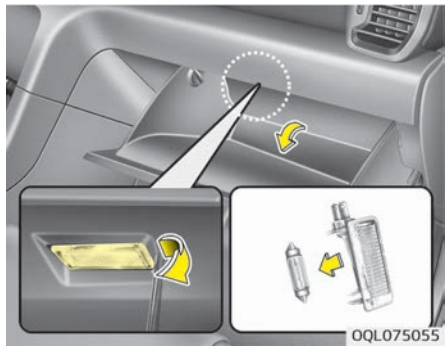

1. Using a flat-blade screwdriver, gently pry the lamp assembly from interior.
2. Remove the bulb by pulling it straight out.
3. Install a new bulb in the socket.
4. Install the lamp assembly to interior.

⚠ CAUTION

Be careful not to dirty or damage the lens, lens tab, and plastic housings.

Tailgate room lamp bulb replacement

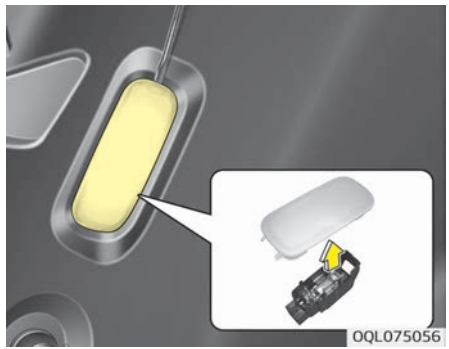

1. Using a flat-blade screwdriver, gently pry the lens cover from lamp housing.
2. Remove the bulb by pulling it straight out.
3. Install a new bulb in the socket.

4. Align the lens cover tabs with the lamp housing notches and snap the lens into place.

⚠ CAUTION

Be careful not to dirty or damage the lens, lens tab, and plastic housings.

✻ NOTICE

If the LED lamp does not operate, have your vehicle checked by a professional workshop. Kia recommends to visit an authorized Kia dealer/service partner.

APPEARANCE CARE

Exterior care

Exterior general caution

It is very important to follow the label directions when using any chemical cleaner or polish. Read all warning and caution statements that appear on the label.

Finish maintenance

Washing

To help protect your vehicle's finish from rust and deterioration, wash it thoroughly and frequently at least once a month with lukewarm or cold water.
If you use your vehicle for off-road driving, you should wash it after each off-road trip. Pay special attention to the removal of any accumulation of salt, dirt, mud, and other foreign materials. Make sure the drain holes in the lower edges of the doors and rocker panels are kept clear and clean.
Insects, tar, tree sap, bird droppings, industrial pollution and similar deposits can damage your vehicle's finish if not removed immediately.
Even prompt washing with plain water may not completely remove all these deposits. A mild soap, safe for use on painted surfaces, may be used.

After washing, rinse the vehicle thoroughly with lukewarm or cold water. Do not allow soap to dry on the finish.

⚠ CAUTION

- **Do not use strong soap, chemical detergents or hot water, and do not wash the vehicle in direct sunlight or when the body of the vehicle is warm.**
- **Be careful when washing the side windows of your vehicle.**
  Especially, with high-pressure water, water may leak through the windows and wet the interior.
- **To prevent damage to the plastic parts and lamps, do not clean with chemical solvents or strong detergents.**

⚠ WARNING

■ Wet brakes

After washing the vehicle, test the brakes while driving slowly to see if
(Continued)

(Continued)

they have been affected by water. If braking performance is impaired, dry the brakes by applying them lightly while maintaining a slow forward speed.

High-pressure washing

- When using high-pressure washers, make sure to maintain sufficient distance from the vehicle.
  Insufficient clearance or excessive pressure can lead to component damage or water penetration.
- Do not spray the camera, sensors or its surrounding area directly with a high pressure washer. Shock applied from high pressure water may cause the device to not operate normally.
- Do not bring the nozzle tip close to boots (rubber or plastic covers) or connectors as they may be damaged if they come into contact with high pressure water.

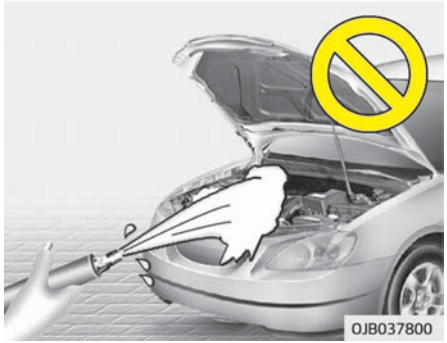

⚠ CAUTION

- **Water washing in the engine compartment including high pressure water washing may cause the failure of electrical circuits located in the engine compartment.**
- **Never allow water or other liquids to come in contact with electrical/electronic components inside the vehicle as this may damage them.**

Waxing

Wax the vehicle when water will no longer bead on the paint.

Always wash and dry the vehicle before waxing. Use a good quality liquid or paste wax, and follow the manufacturer's instructions. Wax all metal trim to protect it and to maintain its luster.
Removing oil, tar, and similar materials with a spot remover will usually strip the wax from the finish. Be sure to re-wax these areas even if the rest of the vehicle does not yet need waxing.
Do not apply wax on embossed unpainted unit, as it may tarnish the unit.

⚠ CAUTION

- **Wiping dust or dirt off the body with a dry cloth will scratch the finish.**
- **Do not use steel wool, abrasive cleaners, acid detergents or strong detergents containing high alkaline or caustic agents on chrome-plated or anodized aluminum parts. This may result in damage to the protective coating and cause discoloration or paint deterioration.**

Finish damage repair

Deep scratches or stone chips in the painted surface must be repaired promptly. Exposed metal will quickly rust and may develop into a major repair expense.

✻ NOTICE

If your vehicle is damaged and requires any metal repair or replacement, be sure the body shop applies anti-corrosion materials to the parts repaired or replaced.

Bright-metal maintenance

- To remove road tar and insects, use a tar remover, not a scraper or other sharp object.
- To protect the surfaces of bright metal parts from corrosion, apply a coating of wax or chrome preservative and rub to a high luster.
- During winter weather or in coastal areas, cover the bright metal parts with a heavier coating of wax or preservative. If necessary, coat the parts with non-corrosive petroleum jelly or other protective compound.

Underbody maintenance

Corrosive materials used for ice and snow removal and dust control may collect on the underbody. If these materials are not removed, accelerated rusting can occur on underbody parts such as the fuel lines, frame, floor pan and exhaust system, even though they have been treated with rust protection. Thoroughly flush the vehicle underbody and wheel openings with lukewarm or cold water once a month, after off-road driving and at the end of each winter. Pay special attention to these areas because it is difficult to see all the mud and dirt. It will do more harm than good to wet down the road grime without removing it. The lower edges of the doors, rocker panels, and frame members have drain holes that should not clog with dirt; trapped water in these areas can cause rusting.

⚠ WARNING

After washing the vehicle, test the brakes while driving slowly to see if they have been affected by water. If braking performance is impaired, dry

(Continued)

(Continued)

the brakes by applying them lightly while maintaining a slow forward speed.

Aluminum wheel maintenance

The aluminum wheels are coated with a clear protective finish.

- Do not use any abrasive cleaner, polishing compound, solvent, or wire brushes on aluminum wheels. They may scratch or damage the finish.
- Clean the wheel when it has cooled.
- Use only a mild soap or neutral detergent, and rinse thoroughly with water. Also, be sure to clean the wheels after driving on salted roads. This helps prevent corrosion.
- Avoid washing the wheels with high-speed car wash brushes.
- Do not use any alkaline or acid detergent. It may damage and corrode the aluminum wheels coated with a clear protective finish.

Corrosion protection

Protecting your vehicle from corrosion

By using the most advanced design and construction practices to combat corrosion, we produce vehicles of the highest quality. However, this is only part of the job. To achieve the long-term corrosion resistance your vehicle can deliver, the owner's cooperation and assistance is also required.

Common causes of corrosion

The most common causes of corrosion on your vehicle are:

- Road salt, dirt and moisture that is allowed to accumulate underneath the vehicle.
- Removal of paint or protective coatings by stones, gravel, abrasion or minor scrapes and dents which leave unprotected metal exposed to corrosion.

High-corrosion areas

If you live in an area where your vehicle is regularly exposed to corrosive materials, corrosion protection is particularly important. Some of the common causes of accelerated corrosion are road salts, dust control chemicals, ocean air and industrial pollution.

Moisture breeds corrosion

Moisture creates the conditions in which corrosion is most likely to occur. For example, corrosion is accelerated by high humidity, particularly when temperatures are just above freezing. In such conditions, the corrosive material is kept in contact with the car surfaces by moisture that is slow to evaporate.
Mud is particularly corrosive because it is slow to dry and holds moisture in contact with the vehicle. Although the mud appears to be dry, it can still retain the moisture and promote corrosion.
High temperatures can also accelerate corrosion of parts that are not properly ventilated so the moisture can be dispersed. For all these reasons, it is particularly important to keep your car clean and free of mud or accumulations of other materials. This applies not only to the visible surfaces but particularly to the underside of the vehicle.

To help prevent corrosion

You can help prevent corrosion from the start by observing the following:

Keep your vehicle clean

The best way to prevent corrosion is to keep your vehicle clean and free of corrosive materials. Attention to the underside of the vehicle is particularly important.

- If you live in a high-corrosion area — where road salts are used, near the ocean, areas with industrial pollution, acid rain, etc.—, you should take extra care to prevent corrosion. In winter, hose off the underside of your vehicle at least once a month and be sure to clean the underside thoroughly when winter is over.
- When cleaning underneath the vehicle, pay particular attention to the components under the fenders and other areas that are hidden from view. Do a thorough job; just dampening the accumulated mud rather than washing it away will accelerate corrosion rather than prevent it. Water under high pressure and steam are particularly effective in removing accumulated mud and corrosive materials.
- When cleaning lower door panels, rocker panels and frame members, be sure that drain holes are kept open so that moisture can escape and not be trapped inside to accelerate corrosion.

Keep your garage dry

Don't park your vehicle in a damp, poorly ventilated garage. This creates a favorable environment for corrosion. This is particularly true if you wash your vehicle in the garage or drive it into the garage when it is still wet or covered with snow, ice or mud. Even a heated garage can contribute to corrosion unless it is well ventilated so moisture is dispersed.

Keep paint and trim in good condition

Scratches or chips in the finish should be covered with "touch-up" paint as soon as possible to reduce the possibility of corrosion. If bare metal is showing through, the attention of a qualified body and paint shop is recommended.

Bird droppings: Bird droppings are highly corrosive and may damage painted surfaces in just a few hours. Always remove bird droppings as soon as possible.

Don't neglect the interior

Moisture can collect under the floor mats and carpeting and cause corrosion. Check under the mats periodically to be sure the carpeting is dry. Use particular care if you carry fertilizers, cleaning materials or chemicals in the vehicle.
These should be carried only in proper containers and any spills or leaks should be cleaned up, flushed with clean water and thoroughly dried.

Interior care

Interior general precautions

Prevent chemicals such as perfume, cosmetic oil, sun cream, hand cleaner, and air freshener from contacting the interior parts because they may cause damage or discoloration. If they do contact the interior parts, wipe them off immediately. If necessary, use a vinyle cleaner, see instructions for correct usage.

⚠ CAUTION

Never allow water or other liquids to come in contact with electrical/elec-

(Continued)

(Continued)

tronic components inside the vehicle as this may damage them.

Fabric seat cover (If equipped)

Please clean the fabric seats regularly with a vacuum cleaner in consideration of fabric material characteristics. If they are heavily soiled with beverage stains, etc., use a suitable interior cleaner. To prevent damage to seat covers, wipe off the seat covers down to the seams with a large wiping motion and moderate pressure using a soft sponge or microfiber cloth.
Velcro closures on clothing or sharp objects may cause snagging or scratches on the surface of the seats.
Make sure not to rub such objects against the surface.

Taking care of leather seats

- Vacuum the seat periodically to remove dust and sand on the seat. It will prevent abrasion or damage of the leather and maintain its quality.
- Wipe the natural leather seat cover often with dry or soft cloth.
- Sufficient use of a leather protective may prevent abrasion of the cover and helps maintain the color.
  Be sure to read the instructions and consult a specialist when using leather coating or protective agents.
- Leather with bright colors(beige, cream beige) is easily contaminated and clear in appearance. Clean the seats frequently.
- Avoid wiping with wet cloth. It may cause the surface to crack.

Cleaning the leather seats

- Remove all contaminations instantly. Refer to instructions below for removal of each contaminant.
- Cosmetic products (sunscreen, foundation, etc.)
  - Apply cleansing cream on a cloth and wipe the contaminated point. Wipe off the cream with a wet cloth and remove water with a dry cloth.
- Beverages (coffee, soft drink, etc.)
  - Apply a small amount of neutral detergent and wipe until contaminations do not smear.
- Oil

- Remove oil instantly with absorbable cloth and wipe with stain remover for natural leather only.

• Chewing gum
- Harden the gum with ice and remove gradually.

⚠ CAUTION

When cleaning leather products (steering wheel, seats etc.), use neutral detergents or low alcohol content solutions. If you use high alcohol content solutions or acid/alkaline detergents, the color of the leather may fade or the surface may get stripped off.

Cleaning the upholstery and interior trim

Vinyl

Remove dust and loose dirt from vinyl with a whisk broom or vacuum cleaner. Clean vinyl surfaces with a vinyl cleaner.

Fabric

Remove dust and loose dirt from fabric with a whisk broom or vacuum cleaner. Clean with a mild soap solution recommended for upholstery or carpets. Remove fresh spots immediately with a fabric spot cleaner. If fresh spots do not receive immediate attention, the fabric can be stained and its color can be affected. Also, its fire-resistant properties can be reduced if the material is not properly maintained.

⚠ CAUTION

Using anything but recommended cleaners and procedures may affect the fabric's appearance and fire-resistant properties.

Cleaning the lap/shoulder belt webbing

Clean the belt webbing with any mild soap solution recommended for cleaning upholstery or carpet. Follow the instructions provided with the soap. Do not bleach or re-dye the webbing because this may weaken it.

Cleaning the interior window glass

If the interior glass surfaces of the vehicle become fogged (that is, covered with an oily, greasy or waxy film), they should be cleaned with glass cleaner. Follow the directions on the glass cleaner container.

⚠ CAUTION

Do not scrape or scratch the inside of the rear window. This may result in damage to the rear window defroster grid.

EMISSION CONTROL SYSTEM (IF EQUIPPED)

The emission control system of your vehicle is covered by a written limited warranty. Please see the warranty information contained in the Warranty & Maintenance book in your vehicle.
Your vehicle is equipped with an emission control system to meet all applicable emission regulations. There are three emission control systems, as follows.

1. Crankcase emission control system
2. Evaporative emission control system
3. Exhaust emission control system

In order to assure the proper function of the emission control systems, have your vehicle inspected and maintained by a professional workshop in accordance with the maintenance schedule in this manual. Kia recommends to visit an authorized Kia dealer/service partner.

Caution for the Inspection and Maintenance Test (With Electronic Stability Control (ESC) system)

- **To prevent the vehicle from misfiring during dynamometer testing, turn the Electronic Stability Control (ESC) system off by pressing the ESC switch.**
- **After dynamometer testing is completed, turn the ESC system back on by pressing the ESC switch again.**

1. Crankcase emission control system

The positive crankcase ventilation system is employed to prevent air pollution caused by blow-by gases being emitted from the crankcase.
This system supplies fresh filtered air to the crankcase through the air intake hose. Inside the crankcase, the fresh air mixes with blow-by gases, which then pass through the PCV valve into the induction system.

2. Evaporative emission control system

The Evaporative Emission Control System is designed to prevent fuel vapors from escaping into the atmosphere.

Canister

Fuel vapors generated inside the fuel tank are absorbed and stored in the on-board canister. When the engine is running, the fuel vapors absorbed in the canister are drawn into the surge tank through the purge control solenoid valve.

Purge Control Solenoid Valve (PCSV)

The purge control solenoid valve is controlled by the Engine Control Module (ECM); when the engine coolant temperature is low during idling, the PCSV closes so that evaporated fuel is not taken into the engine. After the engine warms up during ordinary driving, the PCSV opens to introduce evaporated fuel to the engine.

3. Exhaust emission control system

The Exhaust Emission Control System is a highly effective system which controls exhaust emissions while maintaining good vehicle performance.

Vehicle modifications

This vehicle should not be modified. Modification of your vehicle could affect its performance, safety or durability and may even violate governmental safety and emissions regulations.
In addition, damage or performance problems resulting from any modification may not be covered under warranty.

- If you use unauthorized electronic devices, it may cause the vehicle to operate abnormally, wire damage, battery discharge and fire. For your safety, do not use unauthorized electronic devices.

Engine exhaust gas precautions (carbon monoxide)

- Carbon monoxide can be present with other exhaust fumes. Therefore, if you smell exhaust fumes of any kind inside your vehicle, have it inspected and repaired immediately. If you ever suspect exhaust fumes coming into your vehicle, drive it only with all the windows fully open. Have your vehicle checked and repaired immediately.

⚠ WARNING

■ Exhaust

Engine exhaust gases contain carbon monoxide (CO). Though colorless and odorless, it is dangerous and could be lethal if inhaled. Follow the instructions on this page to avoid CO poisoning.

- Do not operate the engine in confined or closed areas (such as garages) any more than what is necessary to move the vehicle in or out of the area.
- When the vehicle is stopped in an open area for more than a short time with the engine running, adjust the ventilation system (as needed) to draw outside air into the vehicle.
- Never sit in a parked or stopped vehicle for any extended time with the engine running.
- When the engine stalls or fails to start, excessive attempts to restart the engine may cause damage to the emission control system.

Operating precautions for catalytic converters (if equipped)

⚠ WARNING

■ Fire

(Continued)

(Continued)

- **A hot exhaust system can ignite flammable items under your vehicle. Do not park, idle, or drive the vehicle over or near flammable objects, such as grass, vegetation, paper, leaves, etc.**
- **The exhaust system and catalytic system are very hot while the engine is running or immediately after the engine is turned off. Keep away from the exhaust system and catalytic, you may get burned. Also, do not remove the heat sink around the exhaust system, do not seal the bottom of the vehicle or do not coat the vehicle for corrosion control. It may present a fire risk under certain conditions.**

Your vehicle is equipped with a catalytic converter emission control device.
Therefore, the following precautions must be observed:

- Make sure to refuel your vehicle according to the “Fuel requirements” on page 1-03.
- Do not operate the vehicle when there are signs of engine malfunction, such as misfire or a noticeable loss of performance.

- Do not misuse or abuse the engine. Examples of misuse are coasting with the ignition off and descending steep grades in gear with the ignition off.
- Do not operate the engine at high idle speed for extended periods (5 minutes or more).
- Do not modify or tamper with any part of the engine or emission control system. All inspections and adjustments must be made by a professional workshop. Kia recommends to visit an authorized Kia dealer/service center.
- Avoid driving with an extremely low fuel level. Running out of fuel could cause the engine to misfire, damaging the catalytic converter.

Failure to observe these precautions could result in damage to the catalytic converter and to your vehicle. Additionally, such actions could void your warranties.

Diesel particulate filter (if equipped)

The Diesel Particulate Filter (DPF) system removes the soot in the exhaust gas.

Unlike a disposable air filter, the DPF system automatically burns (oxidizes) and removes the accumulated soot according to the driving condition. In other words, the active burning by the engine control system and high exhaust gas temperature caused by normal/high driving condition burns and removes the accumulated soot.

However, if the vehicle continues to be driven at repeated short distances or driven at low speed for a long time, the accumulated soot may not be automatically removed because of low exhaust gas temperature. More than a certain amount of soot deposited, the malfunction indicator light () illuminates.

When the malfunction indicator light blinks, it may stop blinking by driving the vehicle at more than 60 km/h (37 mph) or at more than second gear with 1,500 ~ 2,500 engine rpm for a certain time (for about 25 minutes).

If the malfunction indicator light () continues to blink or the warning message “Check exhaust system” illuminates in spite of the procedure, visit a professional workshop and check the DPF system. Kia recommends to visit an authorized Kia dealer/service partner.

If you continue to drive with the malfunction indicator light blinking for a long time, the DPF system can be damaged and the engine durability can be worsen by oil dilution.

⚠ CAUTION

■ Diesel Fuel (if equipped with DPF)

It is recommended to use the regulated automotive diesel fuel for diesel vehicle equipped with the DPF system.
If you use diesel fuel including high sulfur (more than 50 ppm sulfur) and unspecified additives, it can cause the DPF system to be damaged and white smoke can be emitted.

Lean NOx trap

The Lean NOx Trap (LNT) system removes the nitrogen oxide in the exhaust gas. The smell can occur in the exhaust gas depending on the quality of the fuel and it can degrade NOx reduction performance, please use the regulated automotive diesel fuel.

Specifications & Consumer information

Dimensions....9-02
Engine....9-03
Gross vehicle weight....9-04
Luggage volume....9-05
Air conditioning system....9-06
Bulb wattage....9-07
Tires and wheels....9-09
Recommended lubricants and capacities....9-11
  Recommended SAE viscosity number....9-13
Vehicle identification number (VIN)....9-15
Vehicle certification label....9-16
Tire specification and pressure label....9-17
Engine number....9-18
Air conditioner compressor label....9-19
Refrigerant label....9-20
Declaration of conformity....9-21
Fuel Label....9-22
  Gasoline (Petrol) engine....9-22
  Diesel engine / MHEV....9-22

DIMENSIONS

Item			5 Seater
Overall length			4,485 mm (GT LINE : 4,495 mm)
Overall width			1,855 mm
Overall height	Without roof rack		1,645 mm (Western Europe 1,635mm)
	With roof rack		1,655 mm (Western Europe 1,645mm)
Tread	Front	225/60 R17	1,613 mm
		225/55 R18	1,613 mm
		245/45 R19	1,609 mm
	Rear	225/60 R17	1,625 mm
		225/55 R18	1,625 mm
		245/45 R19	1,620 mm
Wheelbase			2,670 mm

ENGINE

	Gasoline		Diesel
Item	2.0 MPI	2.4 GDI	2.0 TCI
Displacement [cc]	1,999	2,359	1,995
Bore x Stroke [mm]	81.0 x 97.0	88.0 x 97.0	84.0 x 90.0
Firing order	1-3-4-2	1-3-4-2	1-3-4-2
No. of cylinders	4 In-line, DOHC	4 In-line, DOHC	4 In-line, DOHC

GROSS VEHICLE WEIGHT

kg (lbs.)

ITEM			FOR EUROPE	FOR GENERAL	FOR AUSTRALIA
Nu 2.0 MPI	2WD	A/T	2,080 (4,585)	2,060 (4,541)	2,040 (4,497)
		M/T	2,060 (4,541)	2,040 (4,497)	2,020 (4,453)
	AWD	A/T	2,150 (4,740)	2,120 (4,673)	-
		M/T	2,130 (4,696)	2,100 (4,629)	-
Theta II 2.4 GDI	2WD	A/T	2,075 (4,574)	2,110 (4,651)	2,075 (4,574)
	AWD	A/T	2,135 (4,707)	2,170 (4,784)	2,135 (4,707)
R2.0 TCI	2WD	A/T	2,195 (4,839)	2,200 (4,850)	-
		M/T	2170 (4,784)	2,180 (4,806)	-
	AWD	A/T	2,250 (4,960)	2,250 (4,960)	2,250 (4,960)
		M/T	2,230 (4,916)	2,240 (4,938)	-

LUGGAGE VOLUME

Item		Volume
VDA	MIN.	491 (Temp) 466L (Full)
	MAX.	1,480 (Temp) 1,455L (Full)

Min: Behind rear seat to upper edge of the seat back.

Max: Behind front seat to roof.

AIR CONDITIONING SYSTEM

Item		Weight of volume	Classification
Refrigerant	GENERAL / EUROPE (FOR R-134a)	550 ± 25	R-134a
g (oz.)	EUROPE (FOR R-1234yf)	550 ± 25	1234yf
Compressor lubricant g (oz.)		120 ± 10	PAG30

We recommend that you contact an authorized Kia dealer for more details.

BULB WATTAGE

Light Bulb			Wattage (W)	Bulb type
Front	Headlamps (Low)		60	HB3
	Headlamps (Low) - LED type*		LED	LED
	Headlamps (High)		60	HB3
	Front turn signal lamps		21	PY21W
	Front turn signal lamps - LED type*		LED	LED
	Front position lamps	Bulb type	5	P21/5W
		LED type *	LED	LED
	Daytime running light	Bulb type	21	P21/5W
		LED type *	LED	LED
	Front fog lamps *	Bulb type	51	HB4
		LED type	LED	LED
	Side Repeater lamps		5	WY5W

* If equipped

Light Bulb			Wattage (W)	Bulb type
Rear	Rear Stop/Tail lamps (outside)	Bulb type	21/5	P21/5W
	Rear tail lamps (Inside)		5	P21/5W
	Rear Stop/Tail lamps (outside)	LED type	LED	LED
	Rear tail lamps (Inside)		LED	LED
	Rear fog lamps		21	PR21W
	Rear turn signal lamps		21	PY21W
	Back-up lamps		21	P21W
	High mounted stop lamp		LED	LED
	License plate lamps		5	W5W
Interior	Map lamps		10(LED)	W10W(LED)
	Room lamps		10	FESTOON
	Vanity mirror lamps		5	FESTOON
	Tailgate lamp		10(LED)	FESTOON(LED)

* If equipped

TIRES AND WHEELS

Item	Tire size	Wheel size	Load capacity		Speed capacity		Inflation pressure [kPa(psi)]				Wheel lug nut torque [Kgf·m (lbf·ft, N·m)]
							Normal load		Maximum load		
			LI*1	Kg	SS*2	Km/h	Front	Rear	Front	Rear	
Full size tire	225/60 R17	7.0J x 17	99	775	H	210	240 (35)	240 (35)	240 (35)	240 (35)	11~13 (79~94, 107~127)
	225/55 R18	7.0J x 18	98	750	H	210	240 (35)	240 (35)	240 (35)	240 (35)	
	245/45 R19	7.5J x 19	98	750	H	210	240 (35)	240 (35)	240 (35)	240 (35)	
Compact spare tire (if equipped)	T155/90D16	4T x 16	110	1060	M	130	420 (60)	420 (60)	420 (60)	420 (60)	
	T135/90D17	4T x 17	103	875	M	130	420 (60)	420 (60)	420 (60)	420 (60)	
	T135/90D17	4T x 17	104	900	M	130	420 (60)	420 (60)	420 (60)	420 (60)	

*1 Load Index
*2 Speed Symbol

✻ NOTICE

- We recommend that when replacing tires, use the same originally supplied with the vehicles.
  If not, that affects driving performance.
- When driving in high altitude grades, it is natural for the atmospheric pressure to decrease. Therefore, please check the tire pressure and add more air when necessary.
  Additionally required tire air pressure per km above sea level: 1.5 psi/km

⚠ CAUTION

When replacing tires, use the same size originally supplied with the vehicle.
Using tires of a different size can damage the related parts or make it work irregularly.

RECOMMENDED LUBRICANTS AND CAPACITIES

To help achieve proper engine and power train performance and durability, use only lubricants of the proper quality.
The correct lubricants also help promote engine efficiency that results in improved fuel economy.
These lubricants and fluids are recommended for use in your vehicle.

Lubricant			Volume	Classification
Engine oil [*1] (drain and refill) Recommends 	Gasoline Engine	2.0 MPI	4.0 L	Australia, Africa, General Export, Russia, Asia-Pacific API SM, ILSAC GF-4 or above / 5W-20 (B)[*2] ACEA A5 or above / 5W-30 (B)[*2]
				Middle East, India, Libia, Algeria, Morocco, Tunisia, Sudan, Egypt, Iran ACEA A5 or above / 5W-30 (C)[*2]
				Europe API SM, ILSAC GF-4 or above / 5W-20 (D)[*2] ACEA A5 or above / 5W-30 (D)[*2]
		2.4 GDI	4.8 L	ACEA A5/B5 or API Latest/ 5W30(C)
	Diesel Engine	2.0 TCI	7.6 L	With DPF : ACEA C3 or C2 Without DPF : ACEA A3 or B4
Manual transaxle fluid	Gasoline Engine	2.0 MPI	2WD: 1.7 ~ 1.8 L, AWD: 1.6 ~ 1.7 L	SAE 70W, API GL-4 (Recommended : SK HK MTF 70W, SHELL SPIRAX S6 GHME 70W MTF, GS CALTEX GS MTF HD 70W)
	Diesel Engine	2.0 TCI	1.8 ~ 1.9 L	

<table>
<tr><th colspan="5">Lubricant</th><th>Volume</th><th>Classification</th></tr>
<tr><td rowspan="3">Automatic transaxle fluid</td><td rowspan="2">Gasoline Engine</td><td colspan="2">2.0 MPI</td><td>2WD: 7.3 L,
AWD: 7.1 L</td><td rowspan="3">ATF SP-IV
(Recommended : SK, MICHANG)</td></tr>
<tr><td colspan="2">2.4 GDI</td><td>6.7 L</td></tr>
<tr><td>Diesel Engine</td><td colspan="2">2.0 TCI</td><td>7.8L</td></tr>
<tr><td rowspan="3">Coolant</td><td rowspan="2">Gasoline Engine</td><td colspan="2">2.0 MPI</td><td>A/T: 6.9 L
M/T: 7.1 L</td><td rowspan="3">Mixture of antifreeze and distilled water
(Ethylene glycol base coolant for aluminum radiator)</td></tr>
<tr><td colspan="2">2.4 GDI</td><td>7.1 L</td></tr>
<tr><td>Diesel Engine</td><td colspan="2">2.0 TCI</td><td>A/T: 8.5 L
M/T: 8.7 L</td></tr>
<tr><td colspan="5">Brake/clutch fluid</td><td>370±20cc</td><td>FMVSS116 DOT 3 or DOT 4</td></tr>
<tr><td colspan="5">Rear differential oil (4WD)</td><td>0.58</td><td rowspan="5">Hypoid gear oil API GL-5, SAE 75W/85 (SK HCT-5 gear oil 75W/85 or equivalent)</td></tr>
<tr><td rowspan="4">Transfer case oil (4WD)</td><td rowspan="3">Gasoline Engine</td><td rowspan="2">2.0 MPI</td><td>MT</td><td>0.50</td></tr>
<tr><td>AT</td><td>0.45</td></tr>
<tr><td colspan="2">2.4 GDI</td><td>0.45</td></tr>
<tr><td>Diesel Engine</td><td colspan="2">2.0 TCI</td><td>0.45</td></tr>
<tr><td rowspan="2">Fuel</td><td colspan="3">Gasoline Engine</td><td rowspan="2">62 L</td><td rowspan="2">Refer to “Fuel requirements” on page 1-03</td></tr>
<tr><td colspan="3">Diesel Engine</td></tr>
</table>

*1 Engine oils labeled Energy Conserving Oil are now available. Along with other additional benefits, they contribute to fuel economy by reducing the amount of fuel necessary to overcome engine friction. Often, these improvements are difficult to measure in everyday driving, but in a year’s time, they can offer significant cost and energy savings.
*2 Refer to “Recommended SAE viscosity number” on page 9-13.

Recommended SAE viscosity number

⚠ CAUTION

Always be sure to clean the area around any filler plug, drain plug, or dipstick before checking or draining any lubricant. This is especially important in dusty or sandy areas and when the vehicle is used on unpaved roads. Cleaning the plug and dipstick areas will prevent dirt and grit from entering the engine and other mechanisms that could be damaged.

Engine oil viscosity (thickness) has an effect on fuel economy and cold weather operating (engine start and engine oil flowability). Lower viscosity engine oils can provide better fuel economy and cold weather performance, however, higher viscosity engine oils are required for satisfactory lubrication in hot weather.
Using oils of any viscosity other than those recommended could result in engine damage. When choosing an oil, consider the range of temperature your vehicle will be operated in before the next oil change. Proceed to select the recommended oil viscosity from the chart.

Temperature Range for SAE Viscosity Numbers

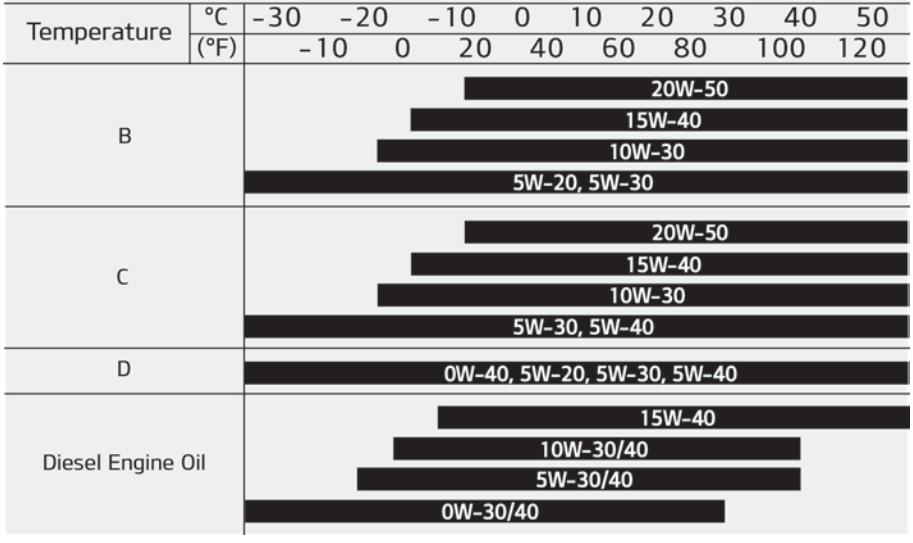

VEHICLE IDENTIFICATION NUMBER (VIN)

■ Frame number

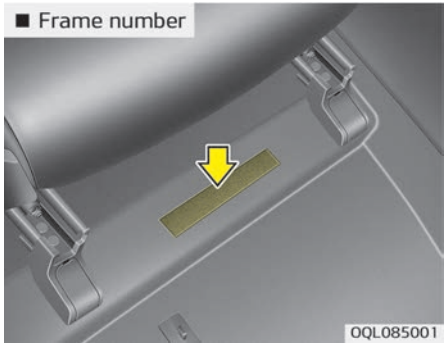

The vehicle identification number (VIN) is the number used in registering your vehicle and in all legal matters pertaining to its ownership, etc.
The number is punched on the floor under the passenger seat. To check the number, open the cover.

■ VIN label (if equipped)

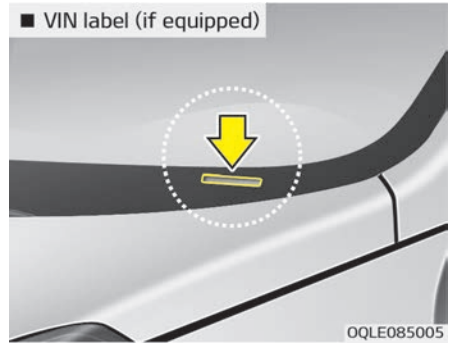

The VIN is also on a plate attached to the top of the dashboard. The number on the plate can easily be seen through the windshield from outside.

VEHICLE CERTIFICATION LABEL

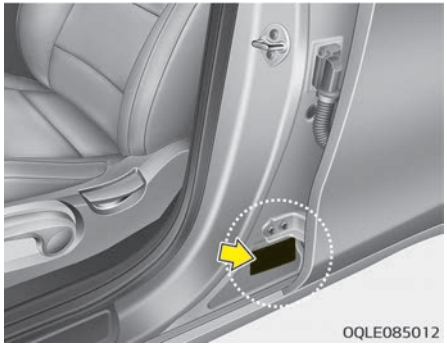

The vehicle certification label attached on the driver's (or front passenger's) side center pillar gives the vehicle identification number (VIN).

TIRE SPECIFICATION AND PRESSURE LABEL

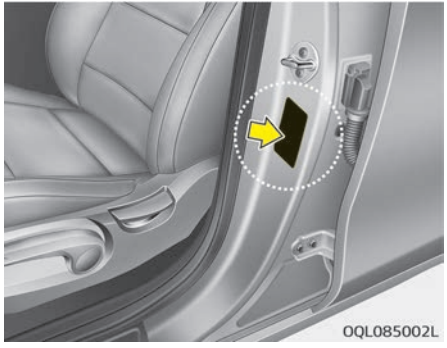

The tires supplied on your new vehicle are chosen to provide the best performance for normal driving.
The tire label located on the driver's side center pillar gives the tire pressures recommended for your vehicle.

ENGINE NUMBER

■ Theta 2.4 GDI

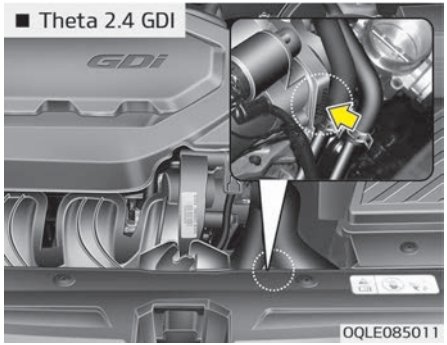

■ Nu 2.0

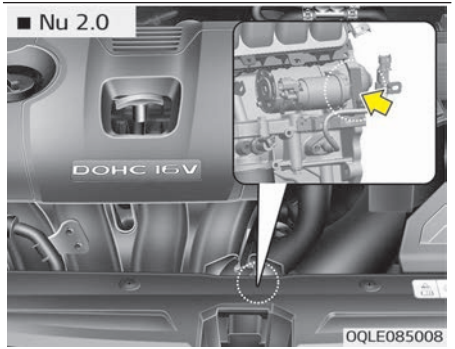

■ Diesel R2.0

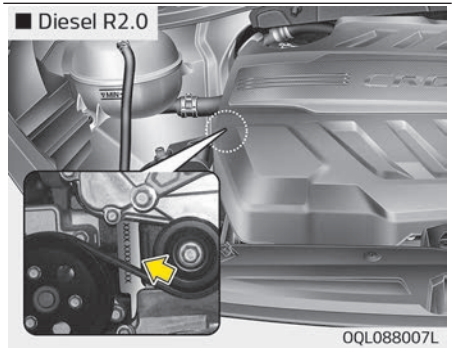

The engine number is stamped on the engine block as shown in the drawing.

AIR CONDITIONER COMPRESSOR LABEL

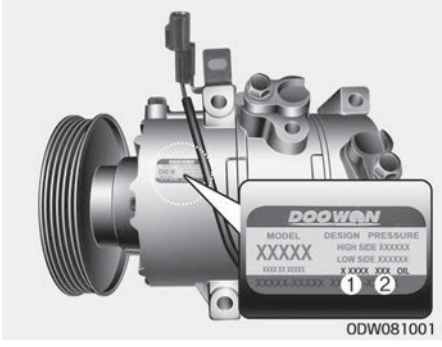

A compressor label informs you the type of compressor your vehicle is equipped with such as model, supplier part number, production number, refrigerant (1) and refrigerant oil (2).

REFRIGERANT LABEL



The refrigerant label is located on the underside of the hood.

DECLARATION OF CONFORMITY

■ Example

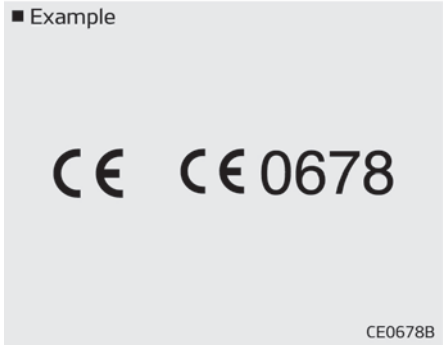

The radio frequency components of the vehicle comply with requirements and other relevant provisions of Directive 1995/5/EC.
Further information including the manufacturer's declaration of conformity is available on Kia web site as follows;
http://www.kia-hotline.com

FUEL LABEL (IF EQUIPPED)

Gasoline (Petrol) engine

The fuel label is attached on the fuel filler door.

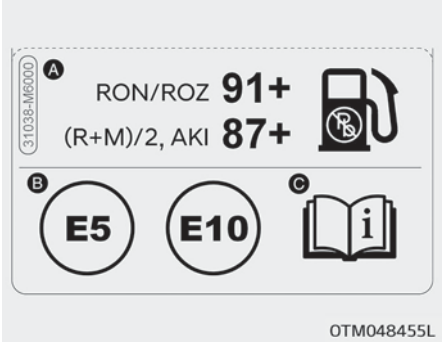

A- Octane rating of unleaded Gasoline (Petrol)
1. RON/ROZ : Research Octane Number
2. (R+M)/2, AKI : Anti Knock Index

B- Identifiers for Petrol-type fuels
❉ This symbol means usable fuel. Do not use any other fuel.

C- For further details, refer to “Fuel Requirements” on page 1-03.

Diesel engine / MHEV

The fuel label is attached on the fuel filler door.

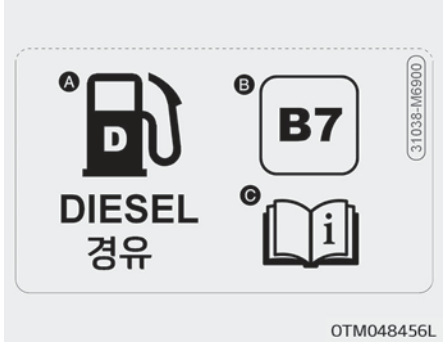

A- Fuel : Diesel

B- Identifiers for FAME containing Diesel-type Fuels
❉ This symbol means usable fuel. Do not use any other fuel.

C- For further details, refer to “Fuel Requirements” on page 1-03.

A

Advanced smart cruise control system
- Limitations of the system 6-105
- To adjust the sensitivity of smart cruise control 6-104
- To convert to cruise control mode 6-105

Air bag warning label 3-63

Air bag warning light 3-46

Air bags 3-42
- Air bag warning label 3-63
- Air bag warning light 3-46
- Curtain air bag 3-53
- Driver's and passenger's front air bag 3-49
- Non-inflation conditions 3-58
- Operation 3-43
- Side air bag 3-52
- SRS care 3-61
- SRS components and functions 3-46

Air cleaner 8-37
- Filter replacement 8-37

Air conditioner compressor label 9-19

Air conditioning system lubricants 9-06

Air ventilation seat 4-147

All wheel drive (AWD) 6-30
- For safe all wheel drive operation 6-34
- Reducing the risk of a rollover 6-37

All wheel drive (AWD) transfer mode selection 6-32

Anti-lock brake system (ABS) 6-50

Appearance care 8-91
- Exterior care 8-91
- Interior care 8-95

Armed stage 4-12

Audio (Without Touch Screen) 5-06

Audio system 5-02
- Antenna 5-02
- Aux, USB port 5-03
- How vehicle audio works 5-03

AUTO HOLD 6-48

Auto light 4-98

Auto start - ISG 6-120

Auto stop - ISG 6-119

Automatic transaxle 6-23
- Manual mode 6-26
- Paddle shifter 6-27
- Shift-lock override 6-28

B

Back-up lamp and Rear turn signal lamp bulb replacement 8-85

Battery..... 8-44
Battery capacity label..... 8-45
Battery recharging..... 8-46
For best battery service..... 8-44
Reset items..... 8-46
Battery replacement..... 4-10
Battery saver function..... 4-96
Before driving..... 6-06
Blind Spot Collision Warning (BCW) / Rear Cross-Traffic Collision Warning (RCCW)..... 6-123
Limitations of the system..... 6-130
Rear Cross-Traffic Collision Warning (RCCW)..... 6-126
Bonnet: see "Hood"..... 4-35
Brake fluid..... 8-33
Checking the brake fluid..... 8-33
Brake system..... 6-39
Anti-lock brake system (ABS)..... 6-50
AUTO HOLD..... 6-48
Electronic parking brake (EPB)..... 6-42
Electronic stability control (ESC)..... 6-52
Hill-start assist control (HAC)..... 6-56
Parking brake..... 6-40
Power brakes..... 6-39
Vehicle stability management (VSM)..... 6-55
Bulb replacement..... 8-77
Bulb wattage..... 9-07
Button start/stop: see "Engine start/stop button".. 6-13

C

Capacities (Lubricants)..... 9-11
Care of seat belts..... 3-30
Care
Care of seat belts..... 3-30
Exterior care..... 8-91
Interior care..... 8-95
SRS care..... 3-61
Tire care..... 8-48
Cargo security screen..... 4-153
Center console storage..... 4-140
Central door lock switch..... 4-17
Chains - tire..... 6-147
Checking tire inflation pressure..... 8-49
Child restraint system..... 3-31
Installing a Child Restraint System (CRS)..... 3-33
ISOFIX anchorage and top-tether anchorage (ISOFIX anchorage system) for children..... 3-34
Selecting a Child Restraint System (CRS)..... 3-31
Child-protector rear door lock..... 4-18
Climate control air filter..... 8-39
Filter inspection..... 8-39

Climate control system
Automatic climate control system....4-125
Automatic heating and air conditioning....4-126
Manual climate control system....4-119
Closing the sunroof....4-43
Clothes hanger....4-151
Clutch fluid
Checking the clutch fluid level....8-33
Combined cluster: see "Instrument cluster"....4-53
Compact spare tire....7-19
Coolant....8-30
Cooling fluid: see "Engine coolant"....8-30
Crankcase emission control system....8-97
Cruise control system....6-86
Cruise control switch....6-87
To cancel cruise control....6-89
To decrease the cruising speed....6-88
To increase cruise control set speed....6-88
To resume cruising speed at more than approximately 30 km/h....6-89
To set cruise control speed....6-87
To temporarily accelerate with the cruise control on....6-88
To turn cruise control off....6-89
Cup holder....4-143
Curtain air bag....3-53

D

Dashboard illumination: see "Instrument panel illumination"....4-54
Dashboard: see "Instrument cluster"....4-53
Day/night rearview mirror....4-49
Declaration of conformity....9-21
Declaration of Conformity (Audio)....5-36
FCC....5-37
NCC for Taiwan....5-39
Defogging (windshield)....4-135
Defroster (rear window)....4-114
Defrosting (windshield)....4-135
Dimensions....9-02
Disarmed stage....4-13
Display illumination: see "Instrument panel illumination"....4-54
Displays: see "Instrument cluster"....4-53
Door lock/unlock features....4-18
Door locks....4-15
Central door lock switch....4-17
Child-protector rear door lock....4-18
Door lock/unlock features....4-18

From inside the vehicle....4-16
From outside the vehicle....4-15
Downhill Brake Control (DBC)....6-82
DBC operation....6-83
Drinks holder: see "Cup holder"....4-143
Drive mode integrated control system....6-110
DRIVE mode....6-110
ECO mode....6-110
Driver attention warning....6-135
Driver's and passenger's front air bag....3-49
Driver's seat belt warning....3-17
Driving at night....6-143
Driving in flooded areas....6-144
Driving in the rain....6-144
Driving off-road....6-145

E

ECO mode (Drive mode integrated control system)....6-110
Economical operation....6-139
Electric power steering....4-45
Electrochromic mirror (ECM)....4-50
Electronic parking brake (EPB)....6-42
Electronic stability control (ESC)....6-52
Emergency starting....7-05
Jump starting....7-05
Emergency tailgate safety release....4-28
Emergency while driving....7-03
Emission control system....8-97
Crankcase emission control system....8-97
Evaporative emission control system....8-97
Exhaust emission control system....8-97
Lean NOx Trap....8-99
Engine....9-03
Engine compartment....2-07,8-03
Engine coolant....8-30
Changing the coolant....8-32
Checking the coolant level....8-30
Engine coolant temperature gauge....4-57
Engine number....9-18
Engine oil (Gasoline)....8-26
Engine oil
Changing the engine oil and filter....8-27
Checking the engine oil level....8-26,8-28
Engine overheats....7-07
Engine start/stop button....6-13
Engine start/stop button position....6-13
Illuminated engine start/stop button....6-13
Starting the engine....6-15

Engine start/stop button illumination....6-13
Engine will not start....7-04
Evaporative emission control system....8-97
Exhaust emission control system....8-97
Explanation of scheduled maintenance items....8-23
Air cleaner filter....8-24
Air conditioning refrigerant....8-25
Automatic transaxle fluid....8-24
Brake discs, pads, calipers and rotors....8-25
Brake hoses and lines....8-25
Brake/Clutch fluid....8-25
Coolant....8-24
Cooling system....8-24
Drive belts....8-23
Drive shafts and boots....8-25
Dual clutch transmission fluid....8-24
Engine oil and filter....8-23
Fuel filter (for gasoline)....8-23
Fuel filter cartridge (for diesel)....8-23
Fuel lines, fuel hoses and connections....8-23
Manual transaxle fluid....8-24
Parking brake....8-25
Spark plugs (for gasoline engine)....8-24
Steering gear box, linkage & boots/lower arm ball joint....8-25
Suspension mounting bolts....8-25
Vacuum crankcase ventilation hoses....8-24
Valve clearance (for gasoline engine)....8-24
Vapor hose (for gasoline engine) and fuel filler cap....8-24
Exterior care....8-91
Exterior features....4-155
Roof rack....4-155
Exterior overview (Front)....2-02
Exterior overview (Rear)....2-03

F

Flat tire....7-14
Changing tires....7-15
Compact spare tire....7-19
Jack and tools....7-14
Removing the spare tire....7-15
Storing the spare tire....7-15
Floor mat anchor(s)....4-152
Fluid
Brake fluid....8-33
Clutch fluid....8-33
Washer fluid....8-34
Fog light (front)....4-101
Folding the outside rearview mirror....4-52
FORWARD COLLISION-AVOIDANCE ASSIST (FCA) SYSTEM (EXCEPT MIDDLE EAST) SEN-

SOR FUSION TYPE (FRONT RADAR+FRONT VIEW CAMERA....6-59
Forward Collision-Avoidance Assist (FCA) System (For Middle East) – Sensor Fusion Type (Front Radar+Front View Camera....6-71
Front seat adjustment (manual)....3-05
Front seat adjustment (power)....3-07
Fuel filler lid....4-37
Fuel filter (for diesel)....8-36
Draining water from the fuel filter....8-36
Fuel filter cartridge replacement....8-36
Fuel gauge....4-58
FUEL LABEL....9-22
Diesel engine / MHEV....9-22
Gasoline (Petrol) engine....9-22
Fuel requirements....1-03
Fuses....8-58
Engine compartment fuse replacement....8-61
Fuse/relay panel description....8-63
Inner panel fuse replacement....8-60

G

Gauge
Fuel gauge....4-58
Gauges....4-56
Glove box....4-140
Glove box lamp....4-112
Gross vehicle weight....9-04

H

Hazard warning flasher....7-02
Hazardous driving conditions....6-141
Headlamp (High-Low beam) bulb replacement....8-81
Headlight (Headlamp) escort function....4-96
Headlight position....4-98
Headrest (front)....3-09
Headrest (rear)....3-14
Heated steering wheel....4-47
High beam assist....4-103
High beam operation....4-99
High mounted stop lamp bulb replacement....8-86
Highway driving....6-145
Hill-start assist control (HAC)....6-56
Hood....4-35
Horn....4-47
How to use this manual....1-02

I

Ignition switch illumination....6-08
Ignition switch position....6-08
Immobilizer system....4-05
Indicator lights....4-81
Inflation conditions (Air bags)....3-57
Inside rearview mirror....4-49
Instrument cluster....4-53
- Gauges....4-56
- Indicator lights....4-81
- Instrument cluster control....4-54
- LCD display....4-61
- LCD display control....4-55
- LCD Modes....4-61
- Trip computer....4-64
- Trip modes....4-64
- Warning and indicator lights....4-74
- Warning lights....4-74

Instrument panel fuse....8-60
Instrument panel overview....2-05
Interior care....8-95
Interior features....4-142
- Air ventilation seat....4-147
- Ashtray....4-142
- Cargo security screen....4-153
- Cigarette lighter....4-142
- Clothes hanger....4-151
- Cup holder....4-143
- Floor mat anchor(s)....4-152
- Luggage net holder....4-153
- Power outlet....4-147
- Seat warmer....4-145
- Sunvisor....4-144
- USB charger....4-149
- Wireless smart phone charging system....4-149

Interior lamp AUTO turn off function....4-110
Interior light....4-110
- Glove box lamp....4-112
- Interior lamp AUTO turn off function....4-110
- Map lamp....4-110
- Room lamp....4-111
- Tailgate room lamp....4-111
- Vanity mirror lamp....4-112

Interior overview....2-04
ISG (Idle Stop and Go) System....6-119
- Auto start....6-120
- Auto stop....6-119
- Condition of ISG system operation....6-120
- ISG system deactivation....6-121
- ISG system malfunction....6-121

ISOFIX system....3-34

J

Jack and tools..... 7-14
Jump starting..... 7-05

K

Key operations..... 4-04
Key positions..... 6-08
  Ignition switch position..... 6-08
  Illuminated ignition switch..... 6-08
  Starting the engine..... 6-10
Keys..... 4-04
  Immobilizer system..... 4-05
  Key operations..... 4-04
  Record your key number..... 4-04

L

Label
  Air bag warning label..... 3-63
  Air conditioner compressor label..... 9-19
  Tire sidewall labeling..... 8-53
  Tire specification and pressure label..... 9-17
  Vehicle certification label..... 9-16
Lane keeping assist (LKA) system..... 6-112
Lap/shoulder belt..... 3-19
LCD display..... 4-61
  LCD Modes..... 4-61
  Trip computer..... 4-64
  Trip modes..... 4-64
LCD Modes..... 4-61
Lean NOx trap..... 8-99
License plate light bulb replacement..... 8-86
Light bulb position (Front)..... 8-79
Light bulb position (Rear)..... 8-80
Light bulb position (Side)..... 8-81
Light bulbs..... 8-77
  Back-up lamp and Rear turn signal lamp bulb replacement..... 8-85
  Bulb replacement precaution..... 8-77
  Front fog lamp (Bulb and LED type) bulb replacement..... 8-83
  Front turn signal lamp bulb replacement..... 8-82
  Glove box lamp bulb replacement..... 8-89
  Headlamp (High-Low beam) bulb replacement..... 8-81
  High mounted stop lamp bulb replacement..... 8-86
  License plate light bulb replacement..... 8-86
  Light bulb position (Front)..... 8-79
  Light bulb position (Rear)..... 8-80
  Light bulb position (Side)..... 8-81
  Map lamp bulb replacement..... 8-87

Personal lamp bulb replacement..... 8-89
Position lamp + DRL bulb replacement..... 8-82
Room lamp bulb replacement..... 8-88
Side repeater lamp (Bulb type) bulb replacement 8-87
Side repeater lamp (LED type) bulb replacement. 8-87
Stop and tail lamp (LED type) bulb replacement.. 8-85
Stop and tail lamp bulb replacement..... 8-83
Tail lamp (inside) bulb replacement..... 8-84
Tailgate room lamp bulb replacement..... 8-89
Vanity mirror lamp bulb replacement..... 8-88
Lighting..... 4-96
Auto light..... 4-98
Battery saver function..... 4-96
Front fog light..... 4-101
Headlight escort function..... 4-96
Headlight leveling device..... 4-102
Headlight position..... 4-98
High beam assist..... 4-103
High beam operation..... 4-99
Position light position..... 4-97
Rear fog light..... 4-101
Turn signals..... 4-100
Lubricants and capacities..... 9-11
Luggage volume..... 9-05

M

Maintenance schedule..... 8-10
Scheduled maintenance service precaution..... 8-10
Maintenance services..... 8-05
Owner maintenance precautions..... 8-05
Owner's responsibility..... 8-05
Maintenance
Engine compartment..... 8-03
Explanation of scheduled maintenance items..... 8-23
Maintenance services..... 8-05
Owner maintenance..... 8-08
Scheduled maintenance service..... 8-10
Tire maintenance..... 8-53
Manual mode - Automatic transaxle..... 6-26
Manual transaxle..... 6-19
Map lamp..... 4-110
Map lamp bulb replacement..... 8-87
Mirrors..... 4-49
Day/night rearview mirror..... 4-49
Electrochromic mirror (ECM)..... 4-50
Folding the outside rearview mirror..... 4-52
Inside rearview mirror..... 4-49
Outside rearview mirror..... 4-50
Remote control..... 4-51

N

Non-inflation conditions (Air bags)..... 3-58

O

Odometer..... 4-58
Oil (engine)..... 8-26
Outside rearview mirror..... 4-50
Outside temperature..... 4-59
Overheats..... 7-07
Owner maintenance..... 8-08
Owner maintenance schedule..... 8-08

P

Panorama sunroof..... 4-40
Closing the sunroof..... 4-43
Resetting the sunroof..... 4-44
Sliding the sunroof..... 4-42
Sunroof open warning..... 4-41
Sunshade..... 4-41
Tilting the sunroof..... 4-42
Parking assist system
Types of warning indicator and sound..... 4-91
Parking brake..... 6-40,8-35
Checking the parking brake..... 8-35
Parking distance warning - forward
Parking distance warning - forward..... 4-89
Parking distance warning - reverse
Parking distance warning - reverse..... 4-86
Personal lamp bulb replacement..... 8-89
Position lamp + DRL bulb replacement..... 8-82
Position light position..... 4-97
Power brakes..... 6-39
Power outlet..... 4-147
Power window lock button..... 4-33
Pre-tensioner seat belt..... 3-25
Precautions..... 3-28

R

Rear parking assist system
Types of warning sound..... 4-87
Rear seat..... 3-12
Rear view monitor
Rear view monitor..... 4-95
Recommended lubricants and capacities..... 9-11
Recommended SAE viscosity number..... 9-13
Record your key number..... 4-04

Reducing the risk of a rollover....6-141
Refrigerant label....9-20
Remote control (outside rear view mirror)....4-51
Remote keyless entry system....4-07
Battery replacement....4-10
Remote keyless entry system operations....4-07
Smart key system operation....4-07
Transmitter precautions....4-09
Remote keyless entry system operations....4-07
Resetting the sunroof....4-44
Road warning....7-02
Rocking the vehicle....6-142
Room lamp....4-111
Room lamp bulb replacement....8-88
Rotation (Tire)....8-50

S

Scheduled maintenance service
Scheduled maintenance service precaution....8-10
Seat belt restraint system....3-16
Seat belts....3-16
Care of seat belts....3-30
Driver's seat belt warning....3-17
Lap/shoulder belt....3-19
Pre-tensioner seat belt....3-25
Precautions....3-28
Seat belt restraint system....3-16
Seat warmer....4-145
Seatback pocket (front)....3-11
Seats....3-02
Front seat adjustment (manual)....3-05
Front seat adjustment (power)....3-07
Headrest (front)....3-09
Headrest (rear)....3-14
Rear seat....3-12
Seatback pocket (front)....3-11
Shift-lock override - Automatic transaxle....6-28
Side air bag....3-52
Side repeater lamp (Bulb type) bulb replacement....8-87
Side repeater lamp (LED type) bulb replacement....8-87
Sliding the sunroof....4-42
Smart cruise control with stop & go system....6-94
Smart cruise control speed....6-95
Smart key system operation....4-07
Smart tailgate....4-25
Smooth cornering....6-143
Snow tires....6-146
Spare tire....7-14
Changing tires....7-15

Compact spare tire....7-19
Removing the spare tire....7-15
Storing the spare tire....7-15
Special driving conditions....6-141
Driving at night....6-143
Driving in flooded areas....6-144
Driving in the rain....6-144
Driving off-road....6-145
Hazardous driving conditions....6-141
Highway driving....6-145
Rocking the vehicle....6-142
Smooth cornering....6-143
Speed limit control system
To set speed limit....6-91
Speedometer....4-56
SRS care....3-61
SRS components and functions....3-46
Starting difficulties, see engine will not start....7-04
Starting the engine - with a smart key....6-15
Starting the engine - with an ignition key....6-10
Steering wheel....4-45
Electric power steering....4-45
Heated steering wheel....4-47
Horn....4-47
Tilt and telescopic steering....4-46
Storage compartment....4-140
Center console storage....4-140
Glove box....4-140
Sunglass holder....4-141
Sunglass holder....4-141
Sunroof open warning....4-41
Sunshade....4-41
Sunvisor....4-144
System setting and activation....6-59,6-71,6-126

T

Tachometer....4-56
Tail lamp (inside) bulb replacement....8-84
Tailgate....4-19
Emergency tailgate safety release....4-28
Non-power tailgate closing....4-20
Non-power tailgate opening....4-19
Power tailgate....4-20
Power tailgate closing....4-22
Power tailgate opening....4-22
Tailgate room lamp....4-111
Tailgate room lamp bulb replacement....8-89
Tether anchor system....3-36
Theft-alarm stage....4-13
Theft-alarm system....4-12

Armed stage....4-12
Disarmed stage....4-13
Theft-alarm stage....4-13
Tilt and telescopic steering....4-46
Tilting the sunroof....4-42
Tire chains....6-147
Tire pressure monitoring system....7-08
Tire rotation....8-50
Tire specification and pressure label....9-17
Tires and wheels....8-48,9-09
Checking tire inflation pressure....8-49
Low aspect ratio tire....8-56
Recommended cold tire inflation pressures....8-48
Tire maintenance....8-53
Tire replacement....8-51
Tire rotation....8-50
Tire sidewall labeling....8-53
Tire traction....8-53
Wheel alignment and tire balance....8-51
Wheel replacement....8-53
To set speed limit control....6-95
Towing....7-23
Emergency towing....7-24
Removable towing hook....7-24
Trailer stability assist (TSA)....6-57
Trailer towing....6-150
Transaxle - Automatic transaxle....6-23
Transaxle - Manual transaxle....6-19
Transmitter precautions....4-09
Trip computer....4-64
Trip modes....4-64
Turn signals....4-100

U

USB charger....4-149
User settings mode....4-67

V

Vanity mirror lamp....4-112
Vanity mirror lamp bulb replacement....8-88
Vehicle break-in process....1-07
Vehicle certification label....9-16
Vehicle handling instructions....1-06
Vehicle identification number (VIN)....9-15
Vehicle stability management (VSM)....6-55
Vehicle weight....6-159

W

Warning and indicator lights..... 4-74
Warning lights.....4-74
Warning messages..... 4-70
Washer fluid.....8-34
Checking the washer fluid level.....8-34
Welcome system..... 4-113
Wheel alignment and tire balance.....8-51
Wheel replacement.....8-53
Windows..... 4-30
Power window lock button..... 4-33
Windshield defrosting and defogging..... 4-135
Windshield washers..... 4-108,4-109
Windshield wipers.....4-106
Winter driving.....6-146
Snow tires.....6-146
Tire chains..... 6-147
Wiper blades..... 8-40
Blade inspection.....8-40
Blade replacement.....8-40
Wipers and washers.....4-106
Windshield washers.....4-108,4-109
Windshield wipers..... 4-106
Wireless smart phone charging system..... 4-149